HOW TO USE THIS MANUAL

0108G−07

GENERAL INFORMATION

1. GENERAL DESCRIPTION

(a) This manual is written in accordance with SAE J2008.

(b) Repair operations can be separated into 3 main processes:
1. Diagnosis
2. Removing/Installing, Replacing, Disassembling/Reassembling, Checking and Adjusting
3. Final Inspection

(c) This manual explains the ”Diagnosis” (found in the ”Diagnostics” section) and ”Removing and Installing, Replacing, Disassembling, Installing and Checking, and Adjusting”. ”Final Inspection” is omitted.

(d) The following essential operations are not written in this manual. However, these operations must be performed in actual situations.
(1) Operations with a jack or lift
(2) Cleaning of a removed part when necessary
(3) Visual check

2. INDEX

(a) An alphabetical INDEX section is provided at the end of the book as a reference to help you find the item to be repaired.

3. PREPARATION

(a) Use of Special Service Tools (SST) and Special Service Materials (SSM) may be required, depending on the repair situation. Be sure to use SST and SSM when they are required and follow the working procedure properly. A list of SST and SSM is in the Preparation section of this manual.

4. REPAIR PROCEDURES

(a) Component drawing is placed under the title where necessary.

(b) Non−reusable parts, grease application areas, precoated parts and tightening torque are specified in the component drawings.

Example:

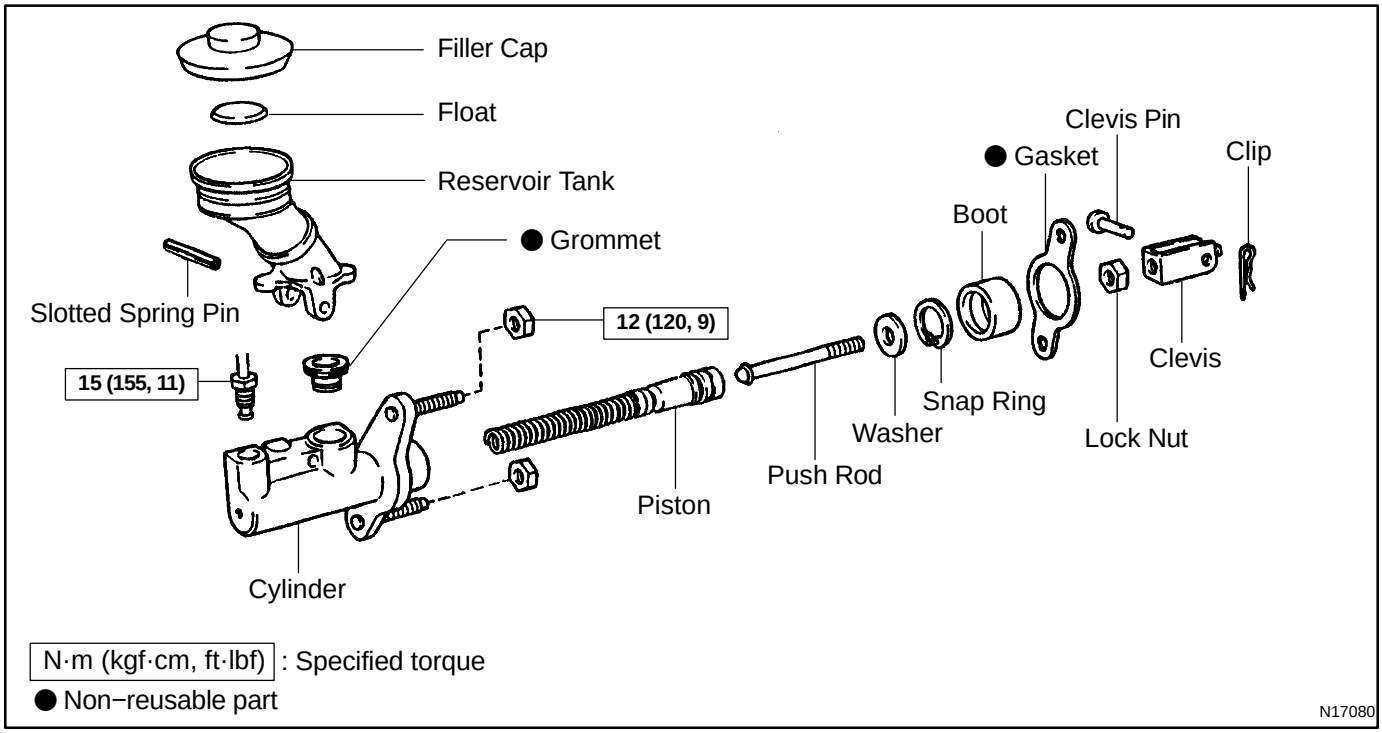

(c) Tightening torque, grease application areas, and non−reusable parts are described as important points in the procedures.

NOTICE:

There are cases where such information can only be explained by using an illustration. In these cases, all the information such as torque, oil, etc. are described in the illustration.

(d) The installation procedures are the removal procedures in reverse order. However, only installation procedures requiring additional information are included.

(e) Only items with key points are described in the text. What to do and other details are placed in illustrations next to the text. Both the text and illustrations are accompanied by standard values and notices.

(f) Illustrations of similar models are sometimes used. In those cases, specific details may be different from the actual vehicle.

(g) Procedures are presented in a step−by−step format:

(1) The illustration shows what to do and where to do it.

(2) The task heading tells what to do.

(3) The explanation text tells how to perform the task. It also has information such as specifications and warnings.

Example:

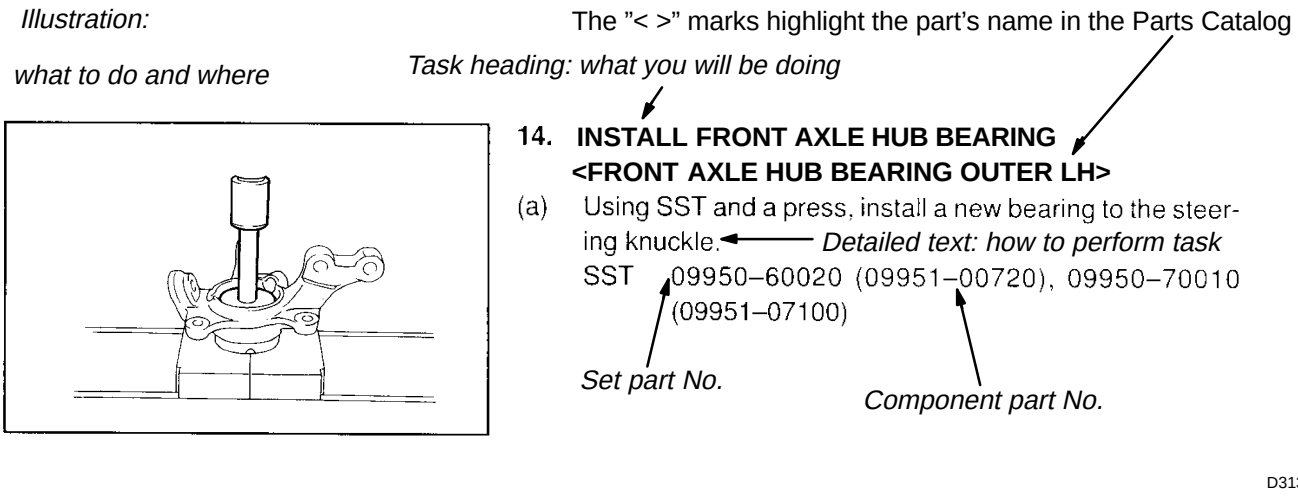

HINT:

This format provides an experienced technician with a FAST TRACK to the necessary information. The task headings are easy to read and the text below the task heading provides detailed information. Important specifications and warnings are always written in bold type.

5. SERVICE SPECIFICATIONS

(a) SPECIFICATIONS are presented in bold−faced text throughout the text where needed. The specifications are also found in the Service Specifications section for quick reference.

6. TERMS DEFINITION

CAUTION	Possibility of injury to you or other people.
NOTICE	Possibility of damage to the components being repaired.
HINT	Provides additional information to help you perform repairs.

7. SI UNIT

(a) The units used in this manual comply with the SI UNIT (International System of Units) standard. Units from the metric system and the English system are also provided.

Example:

Torque: 30 N·m (310 kgf·cm, 22 ft·lbf)

IDENTIFICATION INFORMATION

VEHICLE IDENTIFICATION AND SERIAL NUMBERS

01041−10

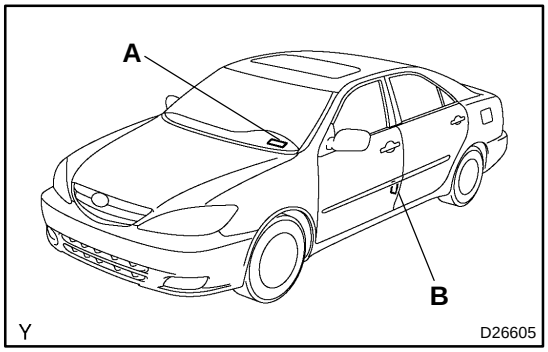

1. VEHICLE IDENTIFICATION NUMBER

(a) The vehicle identification number is stamped on the vehicle identification number plate and certification label, as shown in the illustration.

A: Vehicle Identification Number Plate

B: Certification Label

2. FACTORY OF PRODUCTION

(a) World manufacture identifier is used to distinguish between TMC and TMMK made vehicles. The first 3 digits and letters of the vehicle identification number shows the world manufacturer identifier.

	WMI*
TMC made	JTD
TMMK made	4T1

*: World Manufacturer Identifier

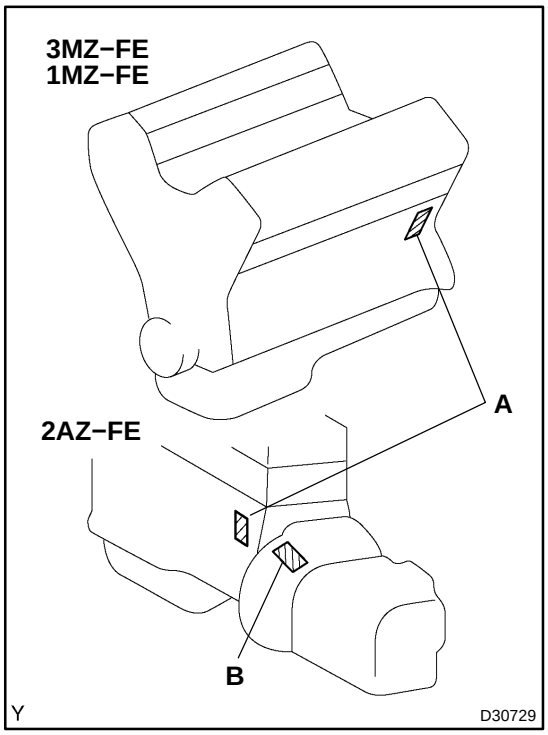

3. ENGINE SERIAL NUMBER AND TRANSAXLE SERIAL NUMBER

(a) The engine serial number is stamped on the cylinder block of the engine, and the transaxle serial number is stamped on the housing, as shown in the illustration.

A: Engine Serial Number

B: Transaxle Serial Number

REPAIR INSTRUCTION

010P4−05

PRECAUTION

1. BASIC REPAIR HINT

(a) HINTS ON OPERATIONS

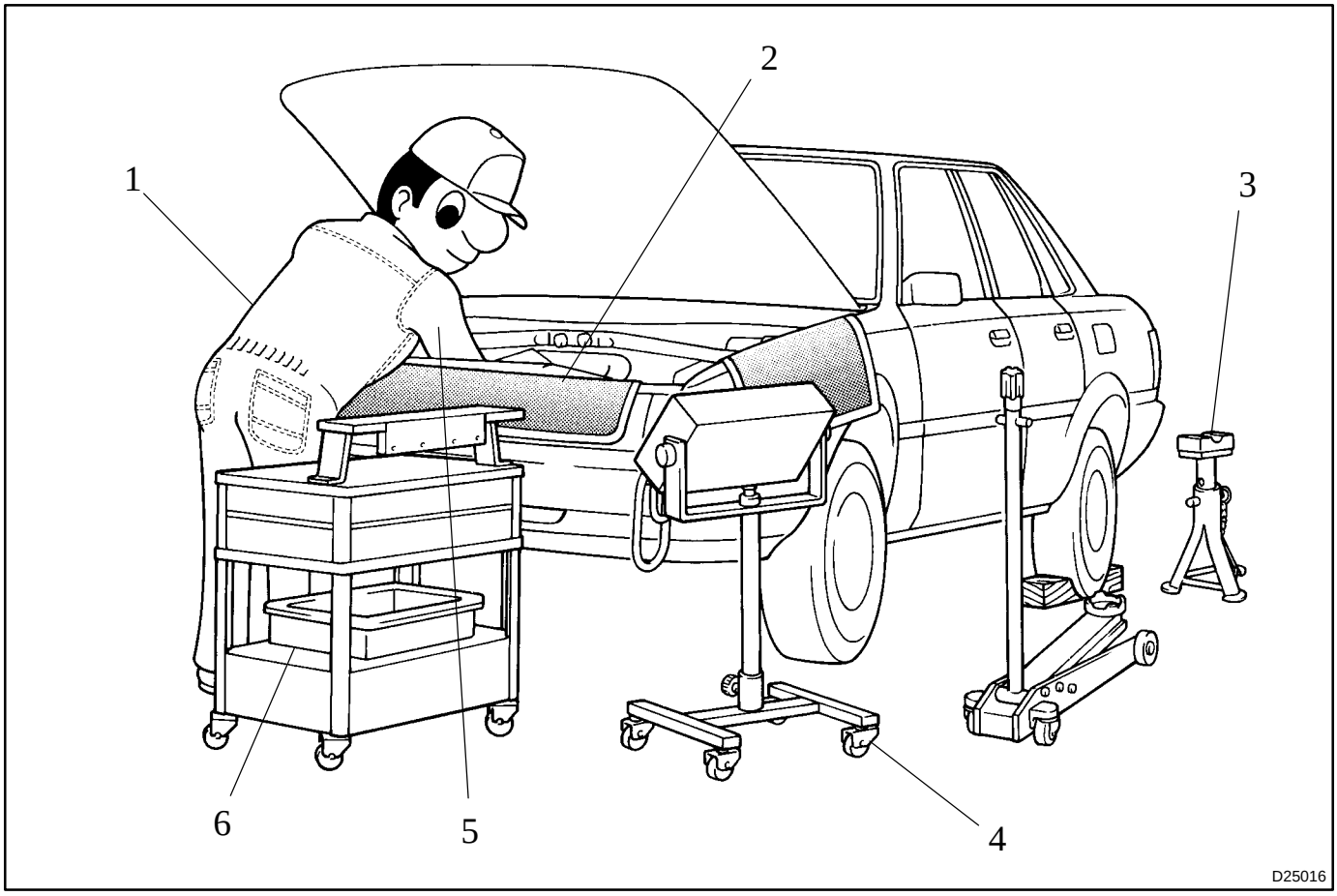

1	Looks	●Always wear a clean uniform. ●Hat and safety shoes must be worn.
2	Vehicle protection	●Prepare a grille cover, fender cover, seat cover and floor mat before starting the operation.
3	Safe operation	●When working with 2 or more persons, be sure to check safety in one another. ●When working with the engine running, pay attention to the providing ventilation for exhaust fumes in the workshop. ●If working on high temperature, high pressure, rotating, moving, or vibrating parts, wear appropriate safety equipment and take extra care not to injure yourself or others. ●When jacking up the vehicle, be sure to support the specified location with a safety stand. ●When lifting up the vehicle, use appropriate safety equipment.
4	Preparation of tools and measuring gauge	●Before starting operation, prepare a tool stand, SST, gauge, oil, shop rag and parts for replacement.
5	Removal and installation, disassembly and assembly operations	●Diagnose with a thorough understanding of proper procedures and of the reported problem. ●Before removing the parts, check the general condition of the assembly and for deformation and damage. ●When the assembly is complicated, take notes. For example, note the total number of electrical connectio−ns, bolts, or hoses removed. Add matchmarks to insure re−assembly of components in the original positions. Temporarily mark hoses and their fittings, if needed. ●Clean and wash the removed parts if necessary and assemble them after a thorough check.
6	Removed parts	●Place the removed parts in a separate box to avoid mixing them up with the new parts or contaminating the new parts. ●As for non−reusable parts such as a gasket, an O−ring, and a self−locking nut, replace them with new ones following the instruction of this manual. ●Retain the removed parts for customer inspection, if requested.

(b) JACKING UP AND SUPPORTING VEHICLE

(1) Care must be taken when jacking up and supporting the vehicle. Be sure to lift and support the vehicle at the proper locations (see page 01−19).

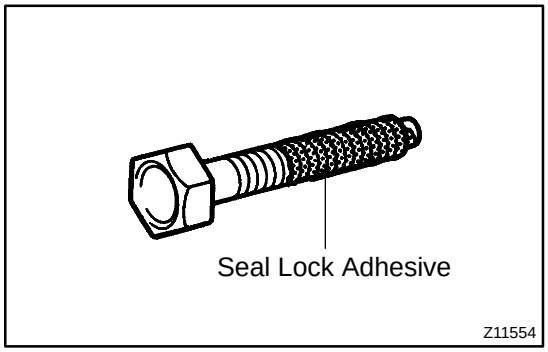

(c) PRECOATED PARTS

(1) Precoated parts are bolts, nuts, etc. that are coated with a seal lock adhesive at the factory.

(2) If a precoated part is retightened, loosened or moved in anyway, it must be recoated with the specified adhesive.

(3) When reusing precoated parts, clean off the old adhesive and dry the part with compressed air. Then apply new seal lock adhesive appropriate to the bolt, nut, or threads.

NOTICE:

Perform the torque with the lower limit value of the torque tolerance.

(4) Some seal lock agents harden slowly. You may have to wait for the seal lock agent to harden.

(d) GASKETS

(1) When necessary, use a sealer on gaskets to prevent leaks.

(e) BOLTS, NUTS AND SCREWS

(1) Carefully follow all the specifications for tightening torques. Always use a torque wrench.

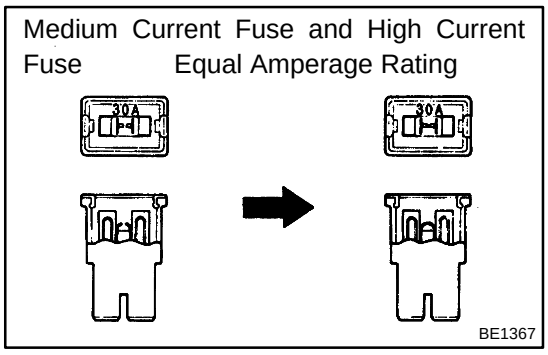

(f) FUSES

(1) When replacing fuses, be sure that the new fuse has the correct amperage rating. DO NOT exceed the rating or use one with a lower rating.

Illustration	Symbol	Part Name	Abbreviation
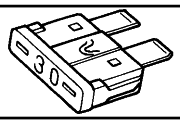 BE5594	 IN0365	FUSE	FUSE
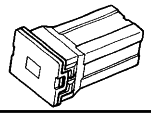 BE5595	 IN0366	MEDIUM CURRENT FUSE	M−FUSE
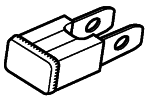 D27353	 IN0367	HIGH CURRENT FUSE	H−FUSE

(g) CLIPS

(1) The removal and installation methods of typical clips used in body parts are shown in the table below.

HINT:

If clips are damaged during a procedure, always replace the damaged clip with a new clip.

Shape (Example)	Removal/Installation
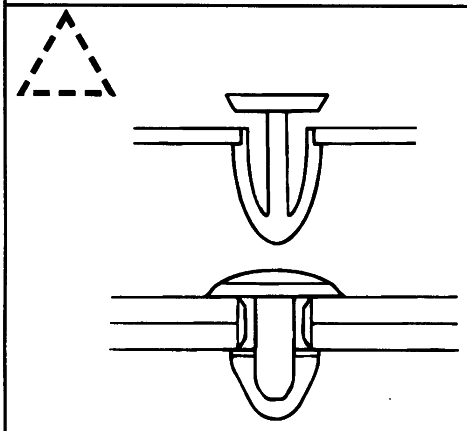	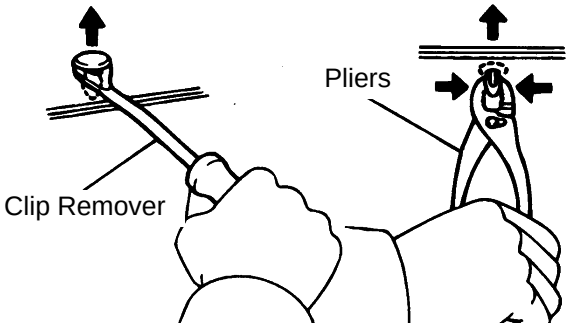 Remove clips from front or rear using clip remover or pliers.
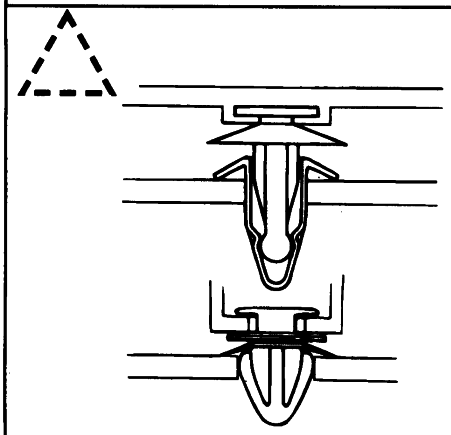	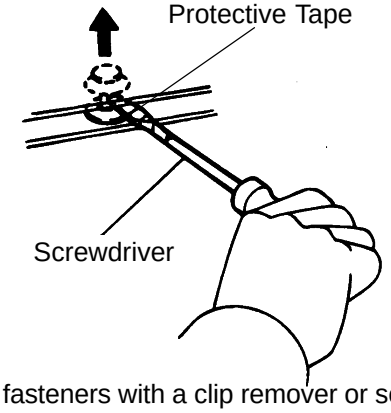 Remove fasteners with a clip remover or screwdriver.
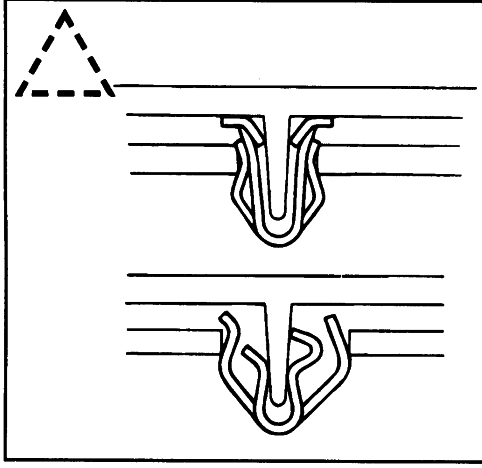	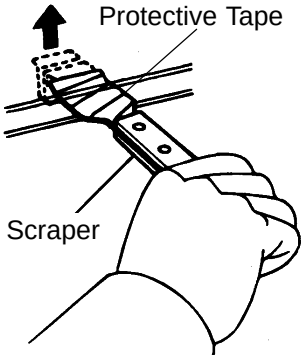 Remove clips with a wide scraper to prevent panel damage.

D25786

Shape (Example)	Removal/Installation
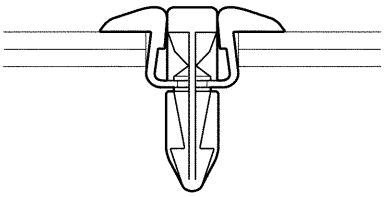	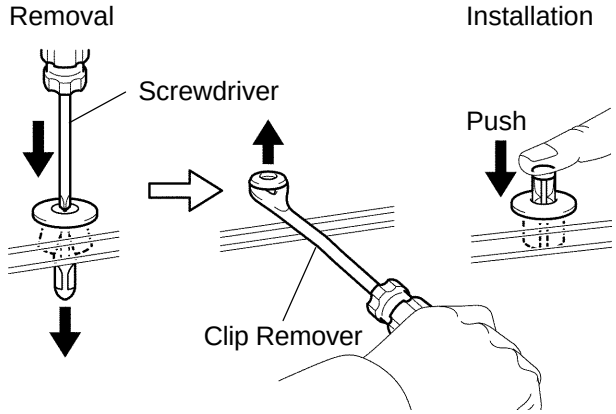 Remove rivet by pushing the center pin through and prying out the rivet shell.
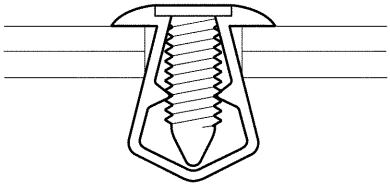	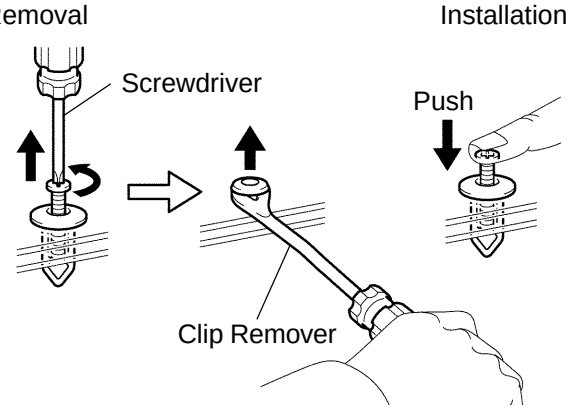 Remove rivet by unscrewing the center pin and prying out the rivet shell.
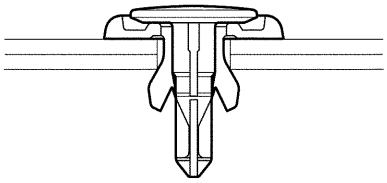	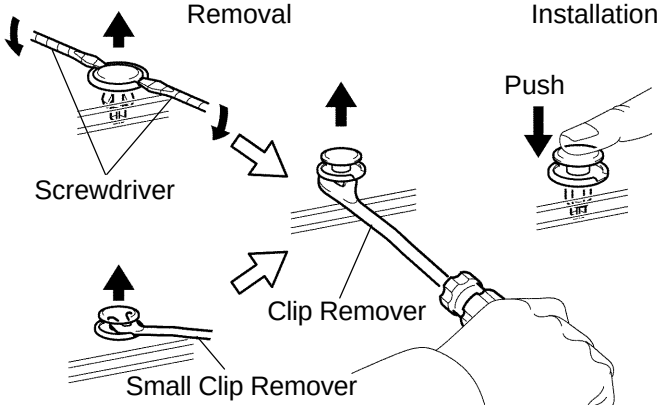 Remove rivet by prying out the pin and then prying out the rivet shell.

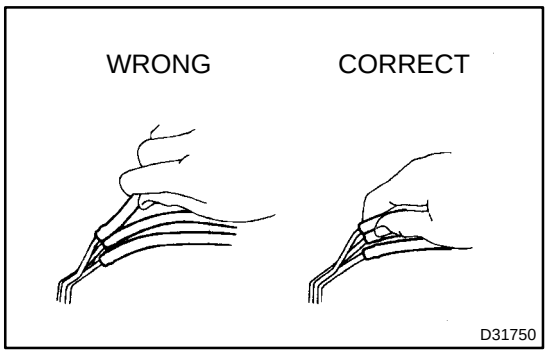

(h) REMOVAL AND INSTALLATION OF VACUUM HOSES

(1) To disconnect vacuum hose, pull and twist from the end of the hose. Do not pull from the middle of the hose as this may cause damage.

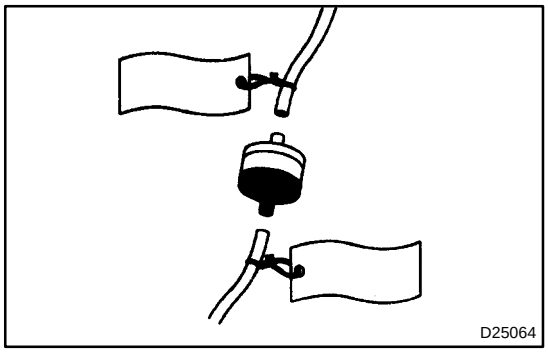

(2) When disconnecting vacuum hoses, use tags to identify where they should be reconnected.

(3) After completing the job, double check that the vacuum hoses are properly connected. The label under the hood shows the proper layout.

(4) When using a vacuum gauge, never force the hose onto a connector that is too large. Use a step−down adapter for adjustment. Once the hose has been stretched, it may leak air.

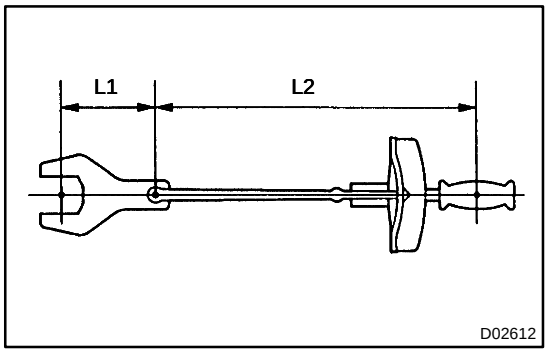

(i) TORQUE WHEN USING TORQUE WRENCH WITH EXTENSION TOOL

(1) If SST or an extension tool is combined with the torque wrench to extend its length, do not tighten the torque wrench to the specified torque values in this manual. The actual torque will be excessive.

(2) Use the formula below to calculate special torque values for situations where SST or an extension tool is combined with the torque wrench.

(3) Formula: T'=T x L2/(L1 + L2)

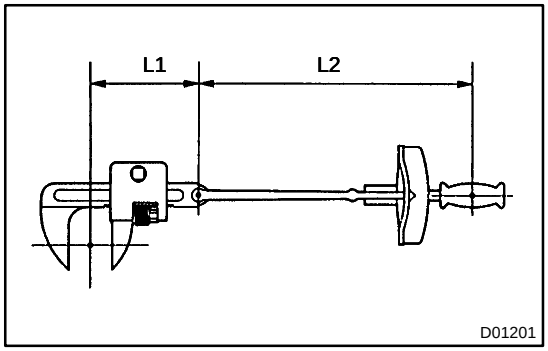

T'	Reading of torque wrench {N·m (kgf·cm, ft·lbf)}
T	Torque {N·m (kgf·cm, ft·lbf)}
L1	Length of SST or extension tool (cm)
L2	Length of torque wrench (cm)

2. FOR VEHICLES EQUIPPED WITH SRS AIRBAG AND SEAT BELT PRETENSIONER

HINT:

The CAMRY is equipped with a Supplemental Restraint System (SRS) and seat belt pretensioner.
Failure to carry out the service operations in the correct sequence could cause the SRS to unexpectedly deploy during servicing and lead to serious injury.
Furthermore, if a mistake is made when servicing the SRS, it is possible that the SRS may fail to operate properly. Before servicing (including removal or installation of parts, inspection or replacement), be sure to read the following section carefully.

(a) GENERAL NOTICE

(1) Malfunction symptoms of the SRS are difficult to confirm so the Diagnostic Trouble Codes (DTCs) become the most important source of information when troubleshooting. When troubleshooting the SRS, always check the DTCs before disconnecting the battery.

(2) To avoid serious injury, servicing the SRS must be started 90 seconds after:

- The ignition switch is turned to the LOCK position.
- The negative (−) terminal cable is disconnected from the battery.

(The SRS is equipped with a back−up power source. If work is started within 90 seconds of disconnecting the negative (−) terminal cable from the battery, the SRS may deploy).
Disconnecting the negative (−) terminal cable will erase clock memory and audio system presets. Mark down data as necessary before disconnecting the cable.

CAUTION:
Never use a back−up power source (battery or other) avoid erasing system memory. The back−up power source may power the SRS, leading to a possible SRS and cause it to deploy.

(3) In minor collisions where the SRS does not deploy, the horn button assembly, instrument panel passenger airbag assembly front seat airbag assembly, curtain shield airbag assembly and seat belt pretensioner should be inspected before further use of the vehicle (See pages 60−27, 60−40, 60−53, 60−47 and 61−7).

(4) Never use SRS parts from another vehicle. When replacing parts, use new parts.

(5) Before repairs, remove the airbag sensor if impacts are likely to be applied to the sensor during repairs.

(6) Never disassemble and repair the airbag sensor assembly, horn button assembly, instrument panel passenger airbag assembly front seat airbag assembly, curtain shield airbag assembly or seat belt pretensioner.

(7) Replace the center airbag sensor assembly, side airbag sensor assembly, horn button assembly or the instrument panel passenger airbag assembly front seat airbag assembly or curtain shield airbag assembly: 1) if damage has occurred from being dropped, or 2) if there are cracks, dents or other defects in the case, bracket or connector.

(8) Do not directly expose the airbag sensor assembly, front seat airbag assembly, curtain shield airbag assembly the horn button assembly, the instrument panel passenger airbag assembly or the seat belt pretensioner to hot air or flames.

(9) Use a voltmeter/ohmmeter with high impedance (10 kΩ/V minimum) for troubleshooting electrical circuits.

(10) Information labels are attached to the SRS components. Follow the instructions on the labels.

(11) After work on the SRS is completed, check the SRS warning light (see page 05−1456).

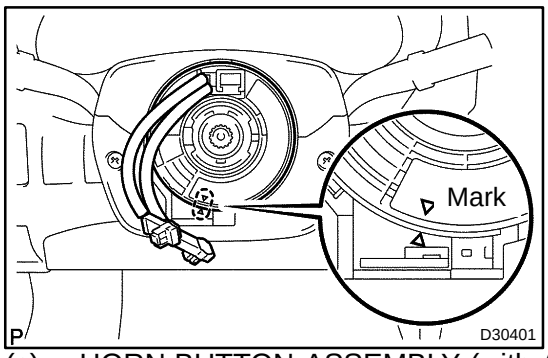

(b) SPIRAL CABLE (in Combination Switch)

(1) The steering wheel must be fitted correctly to the steering column with the spiral cable at the neutral position, otherwise cable disconnection and other problems may occur. Refer to page 60−34 concerning the correct installation of the steering wheel.

(c) HORN BUTTON ASSEMBLY (with Airbag)

(1) When removing the horn button assembly or handling a new horn button, it should be placed with the pad surface facing up. See illustration below.
Placing the horn button with the pad surface facing down may lead to a serious accident if the airbag accidently inflates. Also, do not place anything on top of the horn button.

(2) Never measure the resistance of the airbag squib. This may cause the airbag to inflate, which could cause serious injury.

(3) Grease or detergents of any kind should not be applied to the steering wheel pad.

(4) Store the horn button assembly where the ambient temperature remains below 93˚C (200˚F), has low humidity and is away from electrical noise.

(5) When using electric welding anywhere on the vehicle, disconnect the airbag ECU connectors (4 yellow pins). These connectors contain shorting springs. This feature reduces the possibility of the airbag or seat belt pretensioner deploying due to currents entering the squib wiring.

(6) When disposing of the vehicle or the horn button assembly by itself, the airbag should be inflated using an SST before disposal (see page 60−27). Perform the operation in a safe place away from electrical noise.

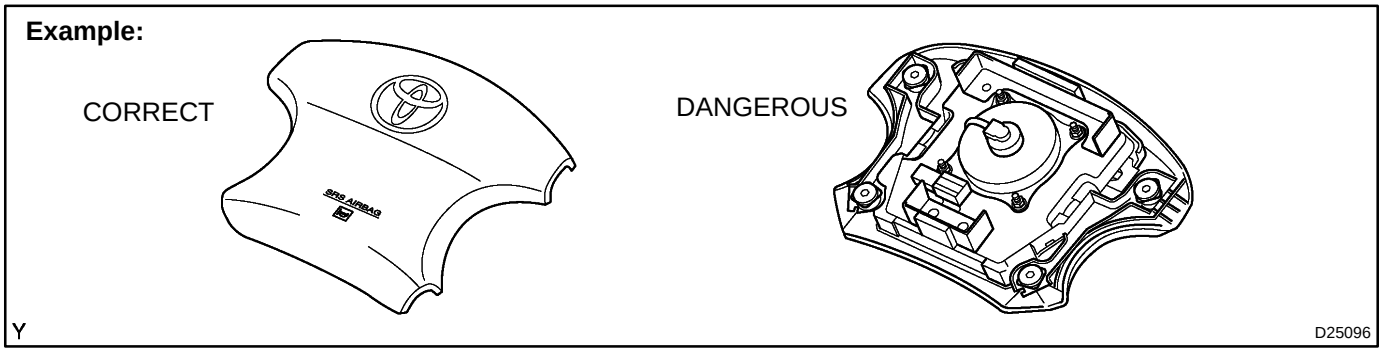

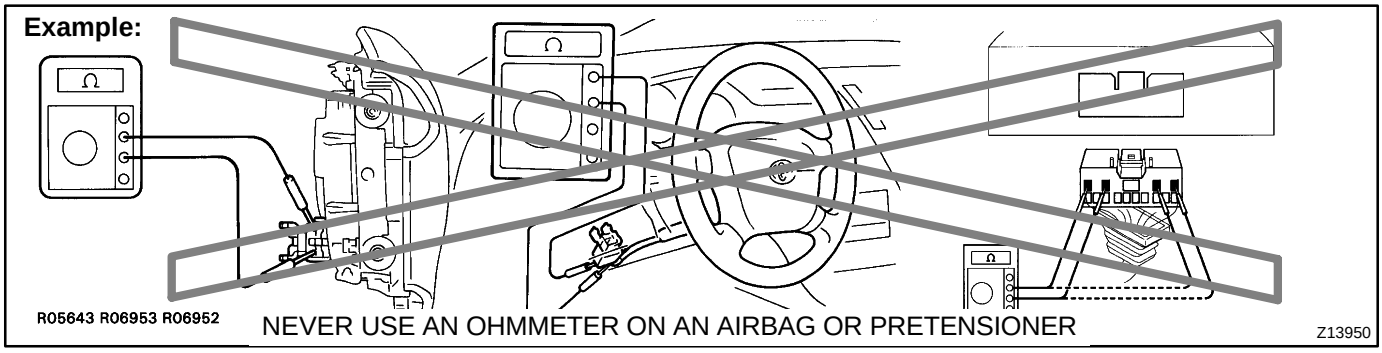

(d) INSTRUMENT PANEL PASSENGER AIRBAG ASSY

(1) Always place a removed or new instrument panel passenger airbag assembly with the airbag inflation direction facing upward.
Placing the airbag assembly with the airbag inflation direction facing downward could cause a serious accident if the airbag inflates.

(2) Never measure the resistance of the airbag squib. This may cause the airbag to inflate, which could cause serious injury.

(3) Grease or detergents of any kinds should not be applied to the instrument panel passenger airbag assembly.

(4) Store the airbag assembly where the ambient temperature remains below 93˚C (200˚F), has low humidity and away from electrical noise.

(5) When using electric welding anywhere on the vehicle, disconnect the airbag ECU connectors (4 yellow pins). These connectors contain shorting springs. This feature reduces the possibility of the airbag deploying due to currents entering the squib wiring.

(6) When disposing of a vehicle or the airbag assembly unit by itself, the airbag should be deployed using SST before disposal (see page 60−40).
Activate in a safe place away from electrical noise.

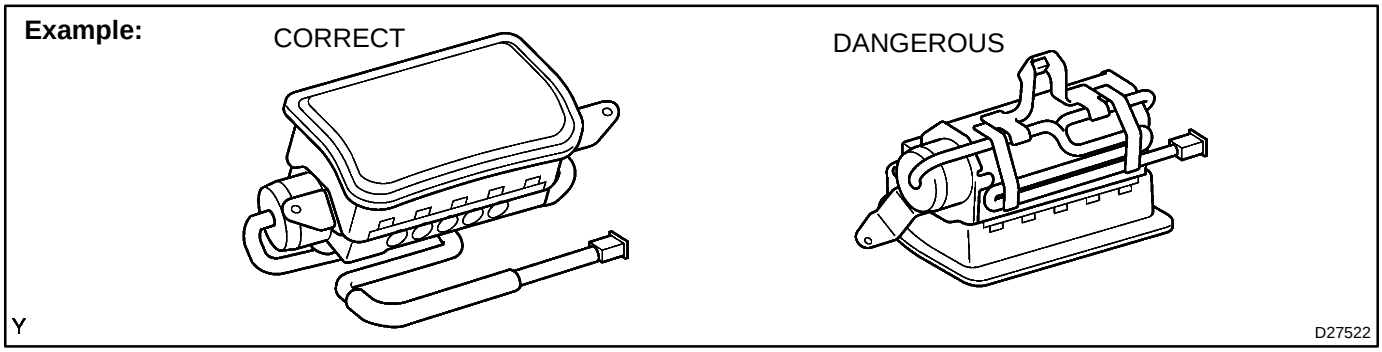

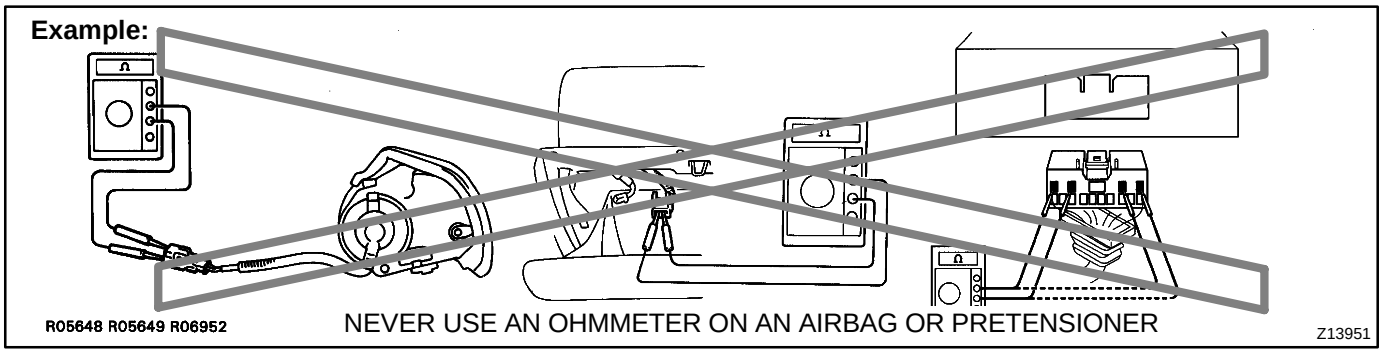

(e) FRONT SEAT AIRBAG ASSEMBLY

(1) Always place a removed or new front seat airbag assembly with the airbag inflation direction facing upward. Placing the airbag assembly with the airbag inflation direction facing downward could cause a serious accident if the airbag deploys.

(2) Never measure the resistance of the airbag squib. This may cause the airbag to inflate, which is very dangerous.

(3) Grease should not be applied to the front seat airbag assembly, and the airbag door should not be cleaned with detergents of any kind.

(4) Store the airbag assembly where the ambient temperature remains below 93˚C (200˚F), without high humidity and away from electrical noise.

(5) When using electric welding anywhere on the vehicle, disconnect the airbag ECU connectors (2 yellow pins). These connectors contain shorting springs. This feature reduces the possibility of the airbag deploying due to currents entering the squib wiring.

(6) When disposing of a vehicle or the airbag assembly unit, the airbag should be deployed using SST before disposal (see page 60−53).
Activate in a safe place away from electrical noise.

Example:

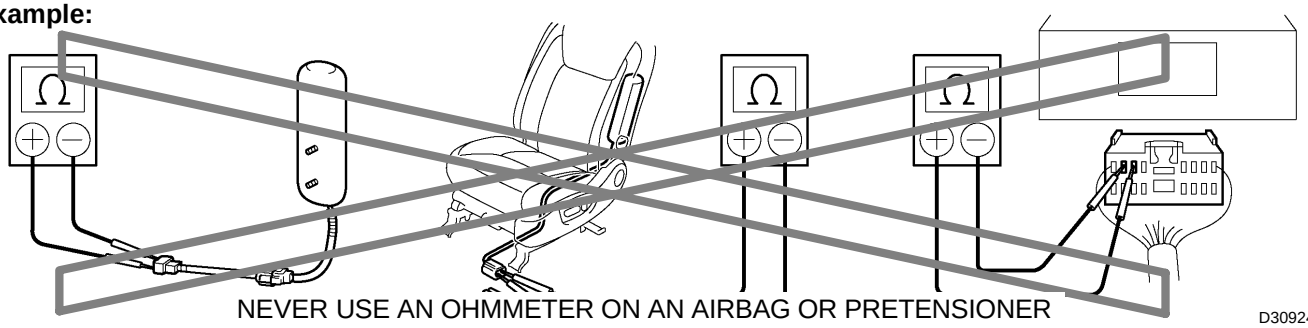

(f) CURTAIN SHIELD AIRBAG ASSEMBLY

(1) Always place the removed or new curtain shield airbag assembly in a clear plastic bag, and keep it in a safe place.

NOTICE:

Plastic bag is not re−useable.

CAUTION:

Never disassemble the curtain shield airbag assembly.

(2) Never measure the resistance of the airbag squib. This may cause the airbag to inflate, which is very dangerous.

(3) Grease should not be attached to the curtain shield airbag assembly, and the surface should not be cleared with detergents of any kind.

(4) Store the airbag assembly where the ambient temperature remains below 93°C (200°F), without high humidity and away from electrical noise.

(5) When using electric welding anywhere on the vehicle, disconnect the airbag ECU connectors (2 yellow pins). These connectors contain shorting springs. This feature reduces the possibility of the airbag deploying due to currents entering the squib wiring.

(6) When disposing of a vehicle or the curtain shield airbag assembly unit, the airbag should be deployed using SST before disposal (see page 05−346).
Activate in a safe place away from electrical noise.

Example:

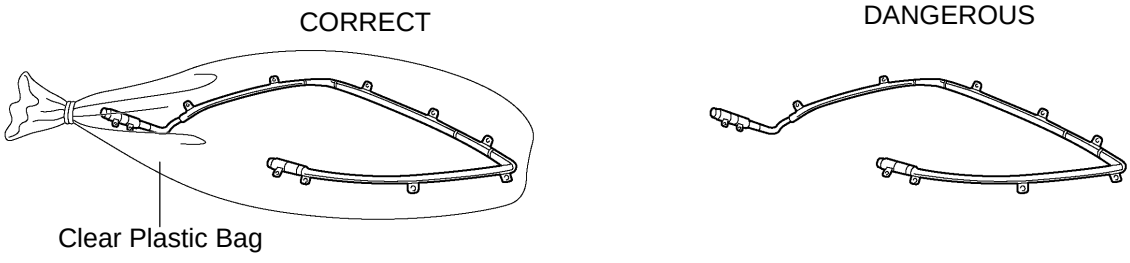

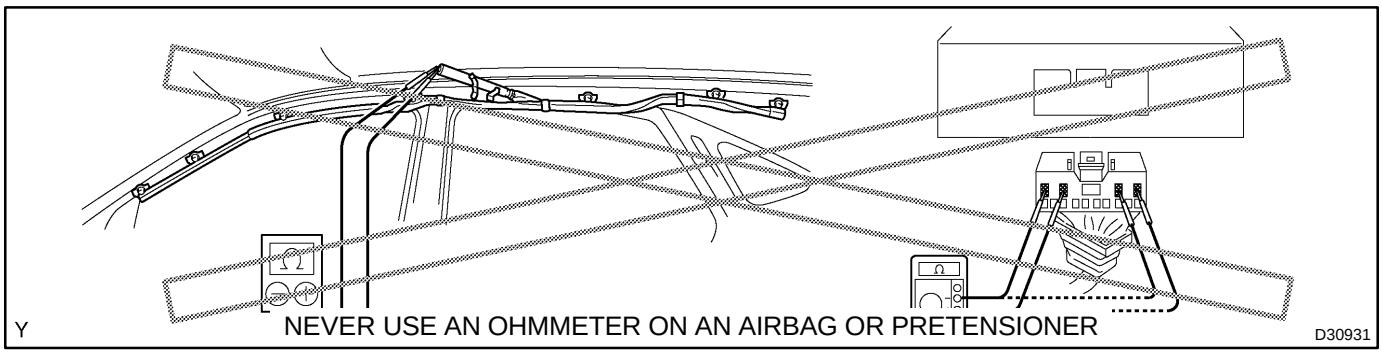

(g) SEAT BELT PRETENSIONER

(1) Never measure the resistance of the seat belt pretensioner (This may cause the seat belt pretensioner to activate, which is very dangerous).
(2) Never disassemble the seat belt pretensioner.
(3) Never install the seat belt pretensioner on another vehicle.
(4) Store the seat belt pretensioner where the ambient temperature remains below 80°C (176°F) without high humidity and away from electrical noise.
(5) When using electric welding anywhere on the vehicle, disconnect the airbag ECU connectors (2 yellow pins). These connectors contain shorting springs. This feature reduces the possibility of the airbag deploying due to currents entering the squib wiring.
(6) When disposing of a vehicle or the seat belt pretensioner unit, the seat belt pretensioner should be activated before disposal (see page 61−7). Perform the operation in a safe place away from electrical noise.
(7) The seat belt pretensioner is hot after being activated, so allow some time for it to cool down sufficiently before disposal. Never apply water to cool down the seat belt pretensioner.
(8) Oil or water should not be put on the front seat outer belt, and the front seat outer belt should not be cleaned with detergents of any kind.

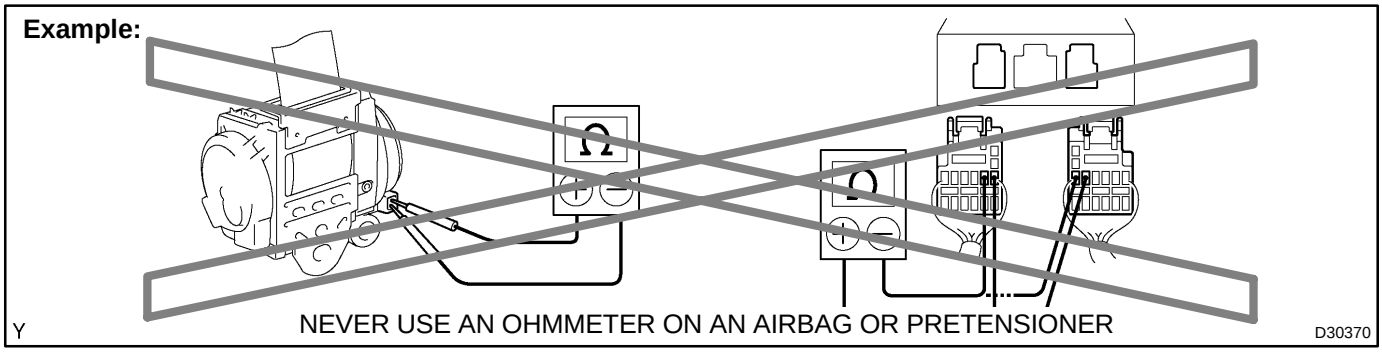

(h) AIRBAG SENSOR ASSEMBLY

(1) Never reuse an airbag sensor assembly that has been involved in a collision where the SRS has deployed.
(2) The connectors to the airbag sensor assembly should be connected or disconnected with the sensor mounted on the floor. If the connectors are connected or disconnected while the airbag sensor assembly is not mounted to the floor, it could cause accidental deployment of the SRS.
(3) Work must be started at last 90 seconds after the ignition switch is turned to the LOCK position and the negative (−) terminal cable is disconnected from the battery, even if only loosening the set bolts of the airbag sensor assembly.

(i) WIRE HARNESS AND CONNECTOR

(1) The SRS wire harness is integrated with the instrument panel wire harness assembly. All the connectors in the system are a standard yellow color. If the SRS wire harness becomes disconnected or the connector becomes broken, repair or replace it.

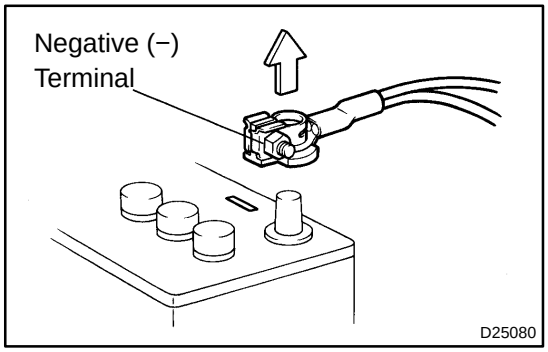

3. ELECTRONIC CONTROL

(a) REMOVAL AND INSTALLATION OF BATTERY TERMINAL

(1) Before performing electronic work, disconnect the battery negative (−) terminal cable beforehand to prevent component and wire damage caused by accidental short circuits.

(2) When disconnecting and installing the terminal cable, turn the ignition switch and lighting switch OFF and loosen the terminal nut completely. Perform these operations without twisting or prying the terminal. Remove the battery cable from battery post.

(3) Clock settings, radio settings, DTCs and other data are erased when the battery cable is removed. Before removing the battery cable, record any necessary data.

(4) When disconnecting the battery's negative (−) terminal cable, re−initialize the following systems after the completion of the operation.

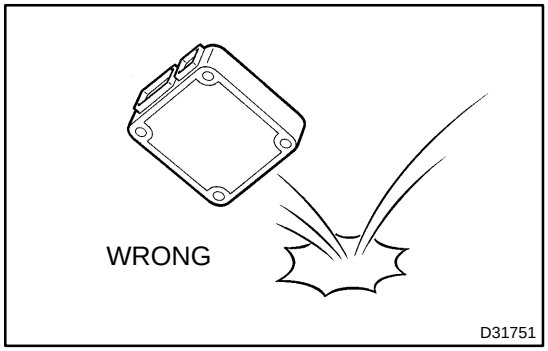

(b) HANDLING OF ELECTRONIC PARTS

(1) Do not open the cover or case of the ECU unless absolutely necessary. If the IC terminals are touched, the IC may be rendered inoperative by static electricity.

(2) To disconnect electronic connectors, pull the connector itself, not the wires.

(3) Be careful not to drop electronic components, such as sensors or relays. If they are dropped on a hard floor, they should be replaced.

(4) When cleaning the engine with steam, protect the electronic components, air filter and emission−related components from water.

(5) Never use an impact wrench to remove or install temperature switches or temperature sensors.

(6) When checking the continuity at the wire connector, insert the tester probe carefully to prevent terminals from bending.

4. REMOVAL AND INSTALLATION OF FUEL CONTROL PARTS

(a) PLACE FOR REMOVING AND INSTALLING OF FUEL SYSTEM PARTS
  (1) Work in a place with good air ventilation and without any ignition sources, such as a welder, grinder, drill, electric motor or stove.
  (2) Never work in a place such as a pit or near a pit because vaporized fuel will collect in those places.

(b) REMOVING AND INSTALLING OF FUEL SYSTEM PARTS
  (1) Prepare a fire extinguisher before starting operation.
  (2) To prevent static electricity, install a ground on the fuel changer, vehicle and fuel tank, and do not spray the area with water. The work surface will become slippery. Do not clean up spills with water as this will spread and gasoline and create a fire hazard.
  (3) Never use any electric equipment like an electric motor or a working light, as they may create sparks or high temperatures.
  (4) Never use an iron hammer, as it may create sparks.
  (5) Dispose of fuel−contaminated shop rags separately using a fire restraint container.

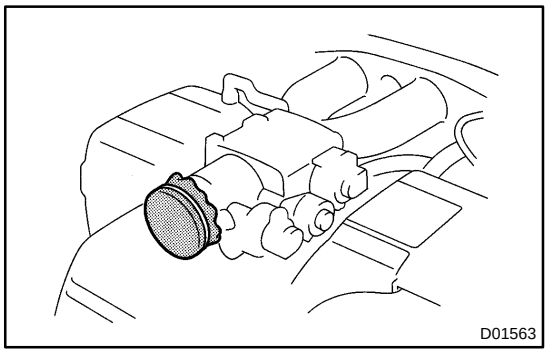
D01563

5. REMOVAL AND INSTALLATION OF ENGINE INTAKE PARTS

(a) If any metal particle enters the inlet pass, this may damage the engine.
(b) When removing and installing the inlet system parts, cover the openings of the removed parts and engine openings. Use clean shop rags, gummed tape, or other suitable materials.
(c) When installing the inlet system parts, check that no metal particles have entered the engine or the installed part.

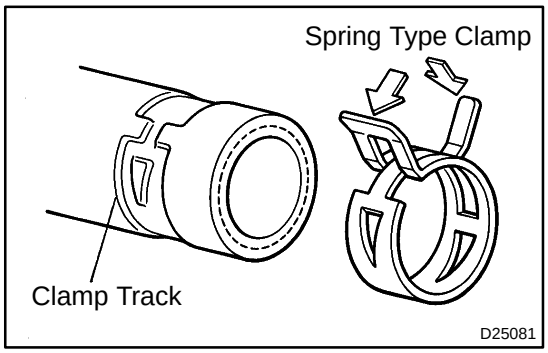

D25081

6. HANDLING OF HOSE CLAMPS

(a) Before removing the hose, check the clamp position so that you can restore it in the same way.
(b) Replace deformed or dented clamps with a new one.
(c) When reusing a hose, attach the clamp on the clamp track portion of the hose.
(d) For a spring type clamp, you may want to spread the tabs slightly after installation by pushing in the direction of the arrow marks as shown in the illustration.

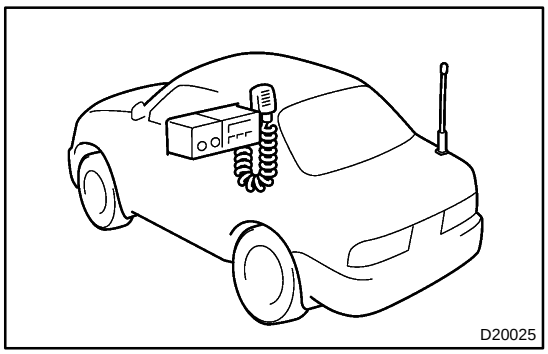
D20025

7. FOR VEHICLES EQUIPPED WITH MOBILE COMMUNICATION SYSTEMS

(a) Install the antenna as far away from the ECU and sensors of the vehicle electronic systems as possible.
(b) Install an antenna feeder at least 20 cm (7.87 in.) away from the ECU and sensors of the vehicle electronic systems. For details of the ECU and sensors locations, refer to the section on applicable components.
(c) Keep the antenna and feeder separate from other wirings as much as possible. This will prevent signals from the communication equipment from affecting vehicle equipment and vice−versa.
(d) Check that the antenna and feeder are correctly adjusted.
(e) Do not install any high−powered mobile communication system.

8. FOR VEHICLES EQUIPPED WITH TRACTION CONTROL (TRAC) SYSTEM

When using a 2−wheel drum tester such as a speedometer tester, a combination tester of speedometer and brake, chassis dynamometer, or jacking up the front wheels and driving the wheels, always turn the TRAC system off via the TRAC OFF switch before testing.

NOTICE:

TRAC system OFF condition can be confirmed by the "TRAC OFF" warning indicator light in the combination meter.

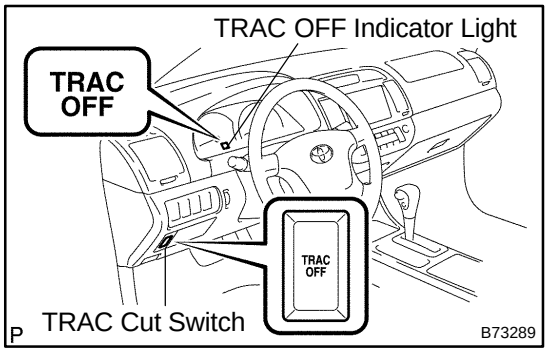

(a) Confirm TRAC system is OFF

(1) Press the TRAC cut ("TRAC OFF") switch to turn off the TRAC system.

(2) Check if the TRAC OFF indicator light illuminates.

HINT:

The SLIP indicator light should always operate right after the engine is restarted.

(3) Begin testing.

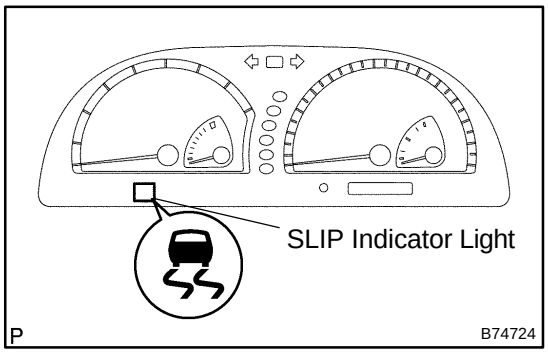

(4) Press the TRAC cut switch to turn on the TRAC system and check that the TRAC OFF indicator light turns off.

HINT:

The SLIP indicator light blinks when the TRAC system is operating.

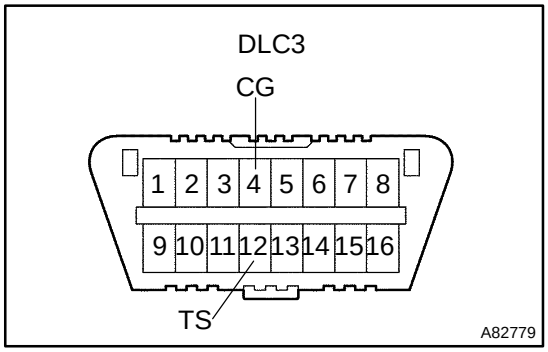

9. FOR VEHICLES EQUIPPED WITH VEHICLE SKID CONTROL (VSC) SYSTEM

(a) NOTICES WHEN USING DRUM TESTER

(1) Before beginning testing, disable the Vehicle Skid Control system (VSC). To disable the VSC, turn the ignition switch OFF and connect SST to terminals TS and CG of DLC3.

SST 09843−18040

NOTICE:

- **Confirm that the VSC warning light blinks.**
- **VSC system will be reset when the engine is restarted.**
- **For safety, secure the vehicle with restraint chains while using a wheel dynamometer.**

(b) NOTICES OF RELATED OPERATIONS TO VSC

(1) Do not carry out unnecessary installation and removal as it might affect the adjustment of VSC related parts.

(2) Be sure to follow the instructions for work preparation and final confirmation of proper operation of the VSC system.

10. FOR VEHICLES EQUIPPED WITH CATALYTIC CONVERTER

CAUTION:

If a large amount of unburned gasoline or gasoline vapors flow into the converter, it may cause overheat and create a fire hazard. To prevent this, observe the following precautions.

(a) Use only unleaded gasoline.

(b) Avoid prolonged idling.
Avoid idling the engine for more than 20 minutes.

(c) Avoid a spark jump test.
(1) Perform a spark jump test only when absolutely necessary. Perform this test as rapidly as possible.
(2) While testing, never race the engine.

(d) Avoid a prolonged engine compression measurement.
Engine compression measurements must be performed as rapidly as possible.

(e) Do not run the engine when the fuel tank is nearly empty. This may cause the engine to misfire and create an extra load on the converter.

01043−07

VEHICLE LIFT AND SUPPORT LOCATIONS

1. NOTICE ABOUT VEHICLE CONDITION WHEN JACKING UP THE VEHICLE

(a) The vehicle must be unloaded before jacking up the vehicle. Never jack up/lift up a heavily loaded vehicle.

(b) When removing heavy equipment such as the engine and transmission, the center of gravity of the vehicle may shift. To stabilize the vehicle: place a balance weight in a location where it will not roll or shift; or use a mission jack to hold the jacking support.

2. NOTICE FOR USING 4 POST LIFT

(a) Follow the safety procedures outlined in its instruction manual.

(b) Use precautionary measures to prevent the free wheel beam from damaging tires or wheels.

(c) Use wheel chocks to secure the vehicle.

3. NOTICE FOR USING JACK AND SAFETY STAND

(a) Work in a flat area using wheel chocks at all times.

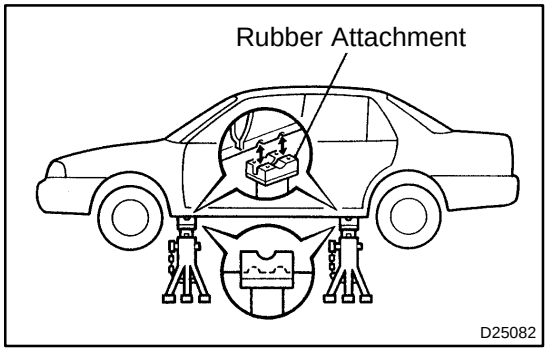

(b) Use a safety stand with a rubber attachment, as shown in the illustration.

(c) Apply the jack and rigid rack to the specified location on the vehicle.

(d) When jacking up the front wheels, release the parking brake and place wheel chocks only behind the rear wheels. When jacking up the rear wheels, place wheel chocks only in front of the front wheels.

(e) The jack should not be used without the rigid rack.

(f) When jacking up only the front wheels or only the rear wheels, place wheel chocks on both sides of the wheels touching the ground.

(g) When lowering the vehicle with its front wheels jacked up, release the parking brake and place wheel chocks only in front of the rear wheels. When lowering a vehicle with its rear wheels jacked up, place wheel chocks only behind the front wheels.

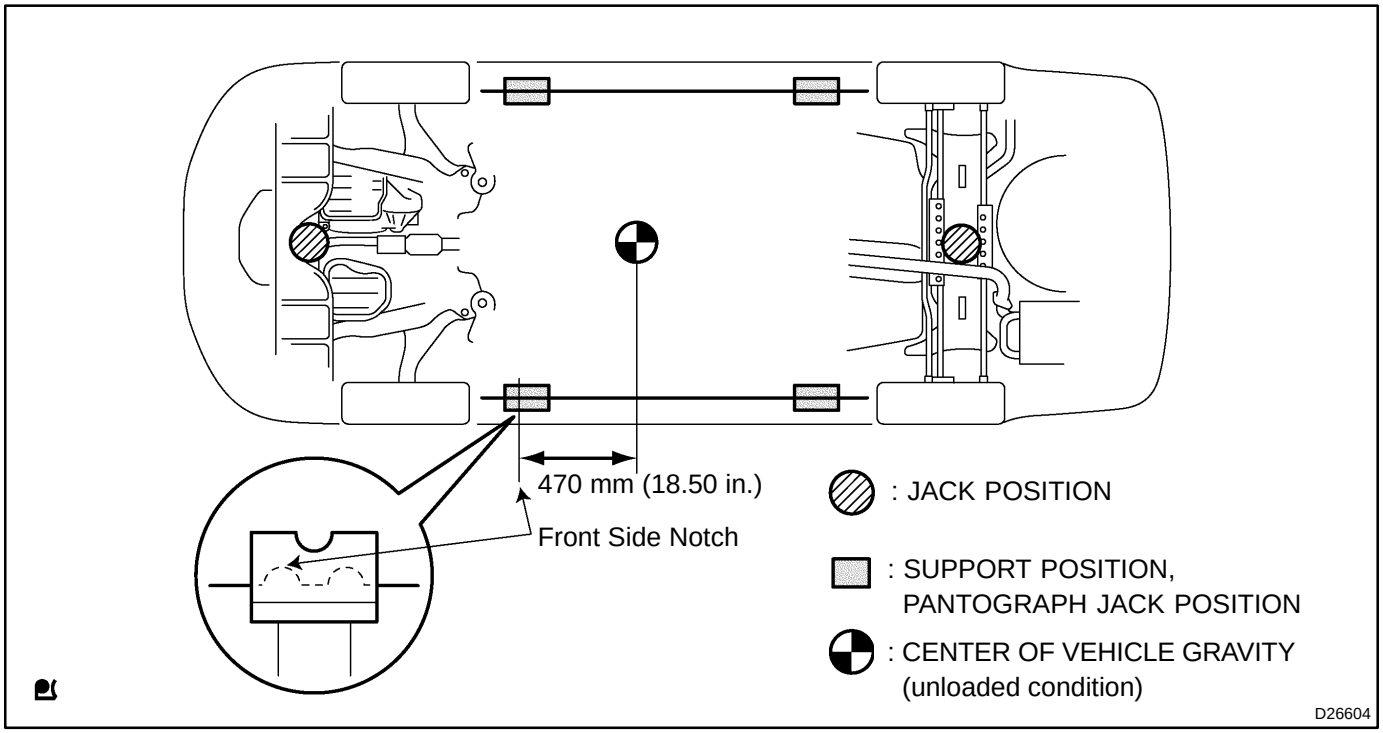

4. NOTICE FOR USING SWING ARM TYPE LIFT

(a) Follow safety procedures outlined in its instruction manual.
(b) Use a swing arm equipped with a rubber attachment, as shown in the illustration.
(c) When using the lift, its center should be as close to the vehicle's center of gravity as possible.
(d) Set the vehicle on the lift as level as possible. Then match the groove of the cradle to the rigid rack support location.
(e) Be sure to lock the swing arms before lifting and during work (if equipped with arm locks).
(f) Lift the vehicle up off the ground. Stand at a safe distance and shake the vehicle to check its stability.

5. NOTICE FOR USING PLATE TYPE LIFT

(a) Follow safety procedures outlined in its instruction manual.
(b) Use a plate lift attachments (rubber lifting blocks) on top of the plate surface.
(c) Refer to the table below to determine how to properly set the vehicle.

Right and left set position	Place the vehicle over the center of the lift.
Front and rear set position	Place the attachments at the ends of the rubber plate surface, under the vehicle lift pad (A and C in the illustration). Raise the plate slightly and reposition the vehicle so the top of the attachment (B in the illustration) is aligned with the front side notch in the vehicle rocker flange.

(d) Lift the vehicle up off the ground, and shake it to make sure that it is stable.

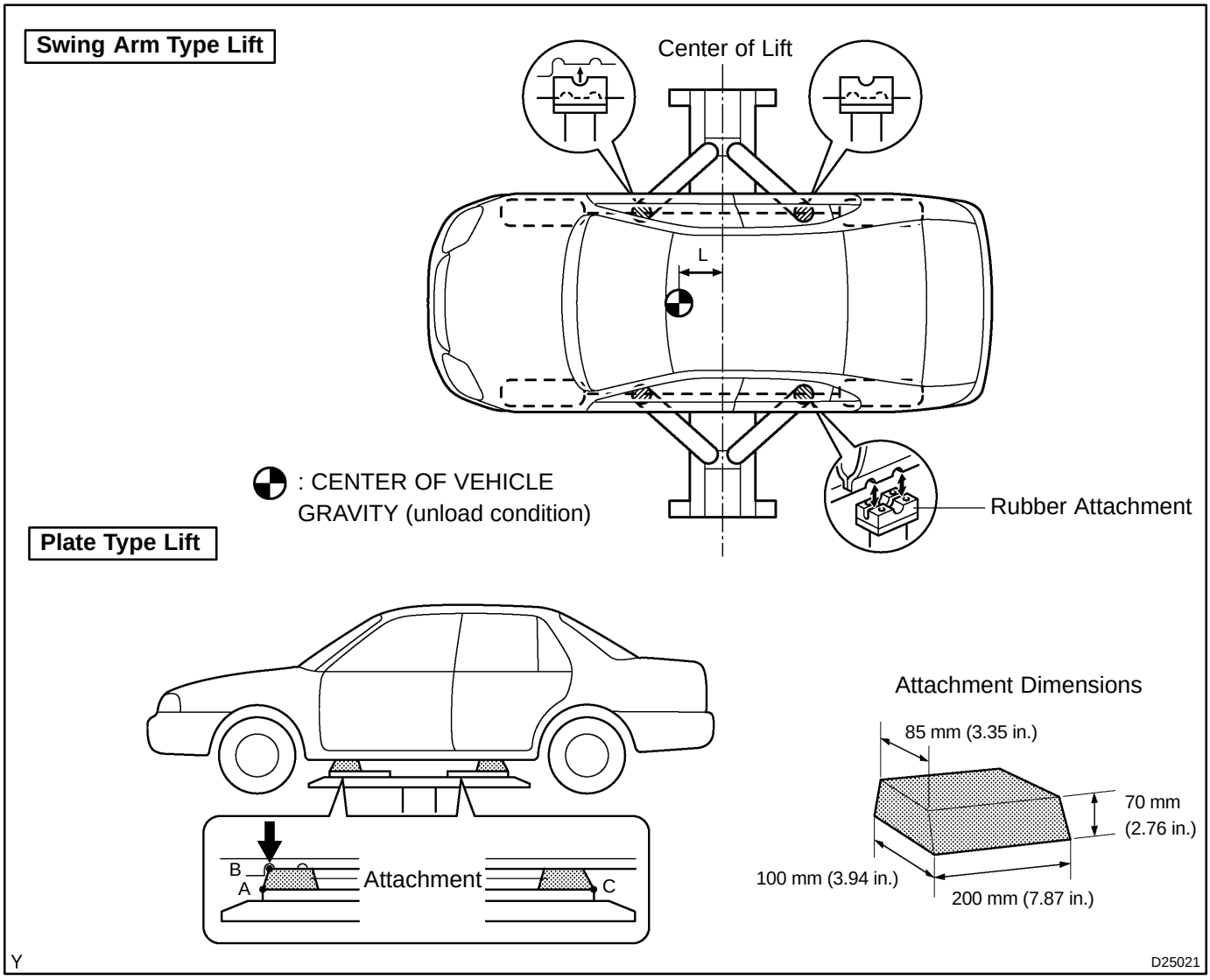

HOW TO TROUBLESHOOT ECU CONTROLLED SYSTEMS

01044–19

GENERAL INFORMATION

A large number of ECU controlled systems are used in the CAMRY. In general, ECU controlled systems are considered to be very intricate, requiring a high level of technical knowledge to troubleshoot. However, most problem checking procedures only involve inspecting the ECU controlled system's circuits one by one. An adequate understanding of the system and a basic knowledge of electricity is enough to perform effective troubleshooting, accurate diagnoses and necessary repairs. Detailed information and troubleshooting procedures on major ECU controlled systems in this vehicle are outlined below:

System	Page
1. SFI System (2AZ−FE)	05−1
2. SFI System (2AZ−FE) (PZEV)	05−346
3. SFI System (1MZ−FE/3MZ−FE)	05−491
4. ABS with EBD System (BOSCH made)	05−869
5. ABS with EBD System (DENSO made)	05−928
6. ABS with EBD & BA & TRAC & VSC System	05−980
7. Electronic Controlled Automatic Transmission [ECT] (U250E)	05−1104
8. Electronic Controlled Automatic Transmission [ECT] (U151E)	05−1232
9. Air Conditioning System	05−1360
10.Supplemental Restrant System	05−1443
11.Lighting System	05−1787
12.Audio System	05−1819
13.Navigation System	05−1888
14.Combination Meter	05−1992
15.Power Window Control System	05−2055
16.Power Door Lock Control System	05−2072
17.Wireless Door Lock Control System	05−2088
18.Engine immobiliser System	05−2106
19.Theft Deterrent System	05−2133
20.Multiplex Communication System	05−2148
21.Can Comunication System	05−2161
22.Cruise Control System	05−2206

FOR USING OBD II SCAN TOOL OR HAND−HELD TESTER

- Before using the scan tool or tester, the scan tool's instruction book or tester's operator manual should be read thoroughly.
- If scan tool or tester cannot communicate with the ECU controlled systems when you have connected the cable of the tester to the DLC3 with the ignition switch and tester turned ON, there is a problem on the vehicle side or tester side.
  (1) If communication is normal when the tester is connected to another vehicle, inspect the diagnosis data link line (Bus ± line) or ECU power circuit of the vehicle.
  (2) If communication is still impossible when the tester is connected to another vehicle, the problem is probably in the tester itself, so perform the Self Test procedures outlined in the Tester Operator's Manual.

01045–11

HOW TO PROCEED WITH TROUBLESHOOTING

HINT:

Carry out troubleshooting in accordance with the procedures below. Only a basic procedure is shown. Details in the Diagnostic Section show the most effective methods for each circuit. Confirm the troubleshooting procedures for the relevant circuit before beginning troubleshooting.

1	VEHICLE BROUGHT TO WORKSHOP

2	CUSTOMER PROBLEM ANALYSIS

(a) Ask the customer about the conditions and environment when the problem occurred.

3	SYMPTOM CONFIRMATION AND DTC (AND FREEZE FRAME DATA) CHECK

(a) Check the battery positive voltage.
Voltage: 11 to 14 V (Engine stopped)

(b) Visually check the wire harness, connectors and fuses for open and short, etc.

(c) Warm up the engine to the normal operating temperature.

(d) Confirm the problem symptoms and conditions, and check for DTCs according to the related chart.

OK → **Go to step 5**

NG

4	DTC CHART

(a) Check the results obtained in step 3, then confirm the inspection procedures for the system or part using the DTC chart.

→ **Go to step 6**

5	PROBLEM SYMPTOMS CHART

(a) Check the results obtained in step 3. Confirm the inspection procedures for the system or part using the problem symptoms table.

6	CIRCUIT INSPECTION OR PARTS INSPECTION

(a) Confirm the circuit in the system or the part that should be checked using the problem symptoms table or the results obtained in step 4.

7	REPAIR

(a) Repair the affected system or part according to the instructions in step 6.

8	CONFIRMATION TEST

(a) After completing repairs, confirm that the problem has been solved. If the problem does not recur, perform a confirmation test under the same conditions and in the same environment as when it occurred for the first time.

END

CUSTOMER PROBLEM ANALYSIS

HINT:

In troubleshooting, the problem symptoms must be confirmed accurately. Preconceptions should be discarded in order to give an accurate judgement. To clearly understand what the problem symptoms are, it is extremely important to ask the customer about the problem and the conditions at the time it occurred.

As much information as possible should be gathered for the reference, even past problems that seem unrelated may help in some cases. In the Diagnostic section, a customer problem analysis table is provided for each system.

5 items are important points in the problem analysis:

Important Points with Customer Problem Analysis

- What −−−−− Vehicle model, system name
- When −−−−− Date, time, occurrence frequency
- Where −−−−− Road conditions
- Under what conditions? −−−−− Running conditions, driving conditions, weather conditions
- How did it happen? −−−−− Problem symptoms

(Sample) Supplemental restraint system check sheet.

CUSTOMER PROBLEM ANALYSIS CHECK

Supplemental Restraint System Check Sheet

Inspector's Name

Customer's Name		**VIN**	
		Production Date	/ /
		Licence No.	
Date Vehicle Brought In	/ /	**Odometer Reading**	**km miles**

Date Problem First Occurred	/ /
Weather	☐ **Fine** ☐ **Cloudy** ☐ **Rainy** ☐ **Snowy** ☐ **Other**
Temperature	**Approx.**

Vehicle Operation	☐ **Starting** ☐ **Idling** ☐ **Driving** [☐ **Constant speed** ☐ **Acceleration** ☐ **Deceleration** ☐ **Other**]

SYMPTOM CONFIRMATION AND DIAGNOSTIC TROUBLE CODE

HINT:

The diagnostic system in the CAMRY has various functions.

The first function is the Diagnostic Trouble Code (DTC) check. In a DTC check, a previous malfunction's DTC can be checked by a technician during troubleshooting. (A DTC is a code stored in the ECU memory whenever a malfunction in the signal circuits to the ECU occurs.)

Another function is the Input Signal Check, which checks if the signals from various switches are sent to the ECU correctly.

By using these functions, the problem areas can be narrowed down and troubleshooting is more effective.

Diagnostic functions are incorporated in the following systems in the CAMRY:

System	Diagnostic Trouble Code Check	Input Signal Check (Sensor Check)	Diagnostic Test Mode (Active Test)
SFI System	○ (with Check Mode)	○	○
Electronically Controlled Automatic Transmission [ECT]	○ (with Check Mode)	○	
Engine Immobiliser System	○		

In the DTC check, it is very important to determine whether the problem indicated by the DTC is: 1) still occurring, or 2) occurred in the past but has since returned to normal. In addition, the DTC should be compared to the problem symptom to see if they are related. For this reason, DTCs should be checked before and after confirmation of symptoms (i.e., whether or not problem symptoms exist) to determine current conditions, as shown in the table below.

Never skip the DTC check. Failure to check DTCs may, depending on the case, result in unnecessary troubleshooting for systems operating normally or lead to repairs not pertinent to the problem. Follow the procedures listed above in the correct order.

A flow chart showing how to proceed with troubleshooting using the DTC check is shown below. Directions from the flow chart will indicate how to proceed either to DTC troubleshooting or to the troubleshooting of the problem symptoms table.

1 DTC CHECK

2 MAKE A NOTE OF DTCS DISPLAYED AND THEN CLEAR THE MEMORY

3 SYMPTOM CONFIRMATION

a	Symptoms exist
b	No symptoms exist

a → Go to step 5

b

4 SIMULATION TEST USING THE SYMPTOM SIMULATION METHODS

5 DTC CHECK

a	DTC displayed
b	No DTC displayed

a → **Troubleshooting of problem indicated by DTC**

b

6 SYMPTOM CONFIRMATION

a	No symptoms exist
b	Symptoms exist

If a DTC was displayed in the initial DTC check, it indicates that the trouble may have occurred in a wire harness or connector in that circuit in the past. Therefore, check the wire harness and connectors (see page 01−32).

a → **SYSTEM NORMAL**

b

TROUBLESHOOTING OF EACH PROBLEM SYMPTOM

The problem is still occurring in a place other than the diagnostic circuit (the DTC displayed first is either for a past problem or a secondary problem).

SYMPTOM SIMULATION

HINT:

The most difficult case in troubleshooting is when no problem symptoms occur. In such cases, a thorough customer problem analysis must be carried out. A simulation of the same or similar conditions and environment in which the problem occurred in the customer's vehicle should be carried out. No matter how much skill or experience a technician has, troubleshooting without confirming the problem symptoms will lead to important repairs being overlooked and lead to mistakes or delays.

For example:

With a problem that only occurs when the engine is cold or occurs as a result of vibration caused by the road during driving, the problem can never be determined if the symptoms are being checked on a stationary vehicle or a vehicle with a warmed−up engine.

Vibration, heat or water penetration (moisture) is difficult to reproduce. The symptom simulation tests below are effective substitutes for the conditions and can be applied on a stationary vehicle.

Important points in the symptom simulation test:

In the symptom simulation test, the problem symptoms as well as the problem area or parts must be confirmed. First, narrow down the possible problem circuits according to the symptoms. Then, connect the tester and carry out the symptom simulation test, judging whether the circuit being tested is defective or normal. Also, confirm the problem symptoms at the same time. Refer to the problem symptoms table for each system to narrow down the possible causes.

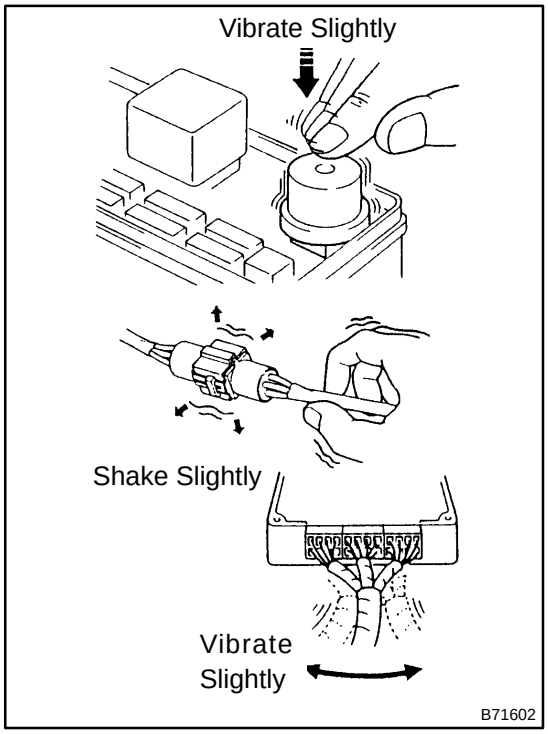

1. VIBRATION METHOD: When vibration seems to be the major cause.

(a) PART AND SENSOR

(1) Apply slight vibration with a finger to the part of the sensor considered to be the cause of the problem and check whether or not the malfunction occurs.

HINT:

Applying strong vibration to relays may open relays.

(b) CONNECTORS

(1) Slightly shake the connector vertically and horizontally.

(c) WIRE HARNESS

(1) Slightly shake the wire harness vertically and horizontally.

The connector joint and fulcrum of the vibration are the major areas that should be checked thoroughly.

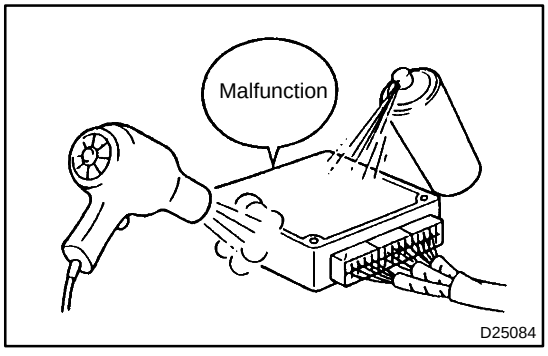

2. HEAT METHOD: If the problem seems to occur when the area in question is heated.

(a) Heat the component that is the possible cause of the malfunction with a hair dryer or similar device. Check if the malfunction occurs.

NOTICE:

- **Do not heat to more than 60°C (140°F). Exceeding this temperature may damage components.**
- **Do not apply heat directly to the parts in the ECU.**

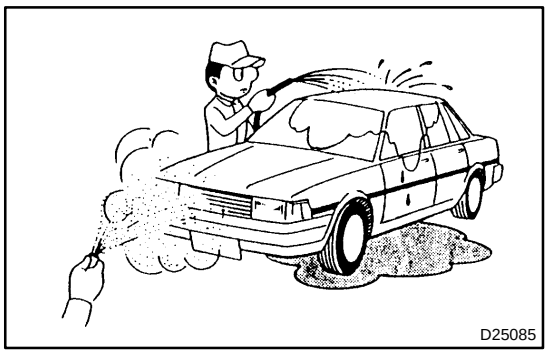

3. WATER SPRINKLING METHOD: When the malfunction seems to occur on a rainy day or in high−humidity.

(a) Sprinkle water onto the vehicle and check if the malfunction occurs.

NOTICE:

- **Never sprinkle water directly into the engine compartment. Indirectly change the temperature and humidity by applying water spray onto the front of the radiator.**
- **Never apply water directly onto the electronic components.**

HINT:

If the vehicle has or had a water leakage problem, the leakage may have damaged the ECU or connections. Look for evidence of corrosion or shorts. Proceed with caution during water tests.

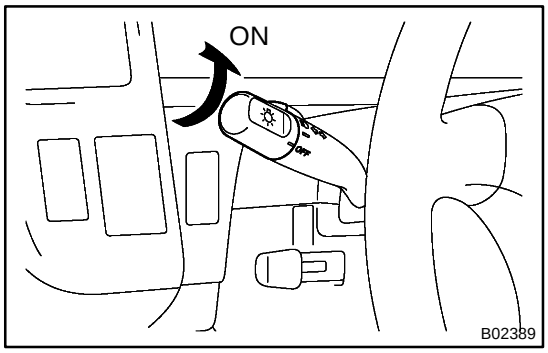

4. HIGH ELECTRICAL LOAD METHOD: When a malfunction seems to occur when electrical load is excessive.

(a) Turn on all the electrical loads including the heater blower, headlights, rear window defogger, etc., and check if the malfunction occurs.

DIAGNOSTIC TROUBLE CODE CHART

Use Diagnostic Trouble Codes (DTCs) (from the DTC checks) in the table below to determine the trouble area and proper inspection procedure. The Supplemental Restraint System (SRS) diagnostic trouble code chart is shown below as an example.

- DTC No.
  Indicates the diagnostic trouble code.
- Page or Instructions
  Indicates the page where the inspection procedures for each circuit is to be found, or gives instructions for checking and repairs.
- Trouble Area
  Indicates the suspect areas of the problem.
- Detection Item
  Indicates the system or details of the problem.

DIAGNOSTIC TROUBLE CODE CHART

If a malfunction code is displayed during the DTC check, check the circuit for that code listed in the table below (Proceed to the page given for that circuit).

DTC No. (See page)	Detection Item	Trouble Area	SRS Warning Light
B0100/13 (05−119)	●Short in D squib circuit	●Steering wheel pad (squib) ●Spiral cable ●Airbag sensor assembly ●Wire harness	ON
B0101/14 (05−124)	●Open in D squib circuit	●Steering wheel pad (squib) ●Spiral cable ●Airbag sensor assembly ●Wire harness	ON
B0102/11 (05−128)	●Short in D squib circuit (to ground)	●Steering wheel pad (squib) ●Spiral cable ●Airbag sensor assembly ●Wire harness	ON
B0103/12 (05−132)	●Short in D squib circuit (to B+)	●Steering wheel pad (squib) ●Spiral cable ●Airbag sensor assembly ●Wire harness	ON
B0105/53 (05−136)	●Short in P squib circuit	●Front passenger airbag assembly (squib) ●Airbag sensor assembly ●Wire harness	ON
B0106/54	●Open in P squib circuit	●Front passenger airbag assembly (squib) ●Airbag sensor assembly ●Wire harness	
	b circuit (to Ground)	●Front passenger airbag assembly (squib) ●Airbag sensor assembly ●Wire harness	

PROBLEM SYMPTOMS TABLE

The suspected circuits or parts for each problem symptom are shown in the table below. Use this table to troubleshoot when, during a DTC check, a ”Normal” code is displayed but the problem is still occurring. Numbers in the table show the inspection order in which the circuits or parts should be checked.

HINT:

In some cases, the problem is not detected by the diagnostic system even though a problem symptom is present. It is possible that the problem is occurring outside the detection range of the diagnostic system, or that the problem is occurring in a completely different system.

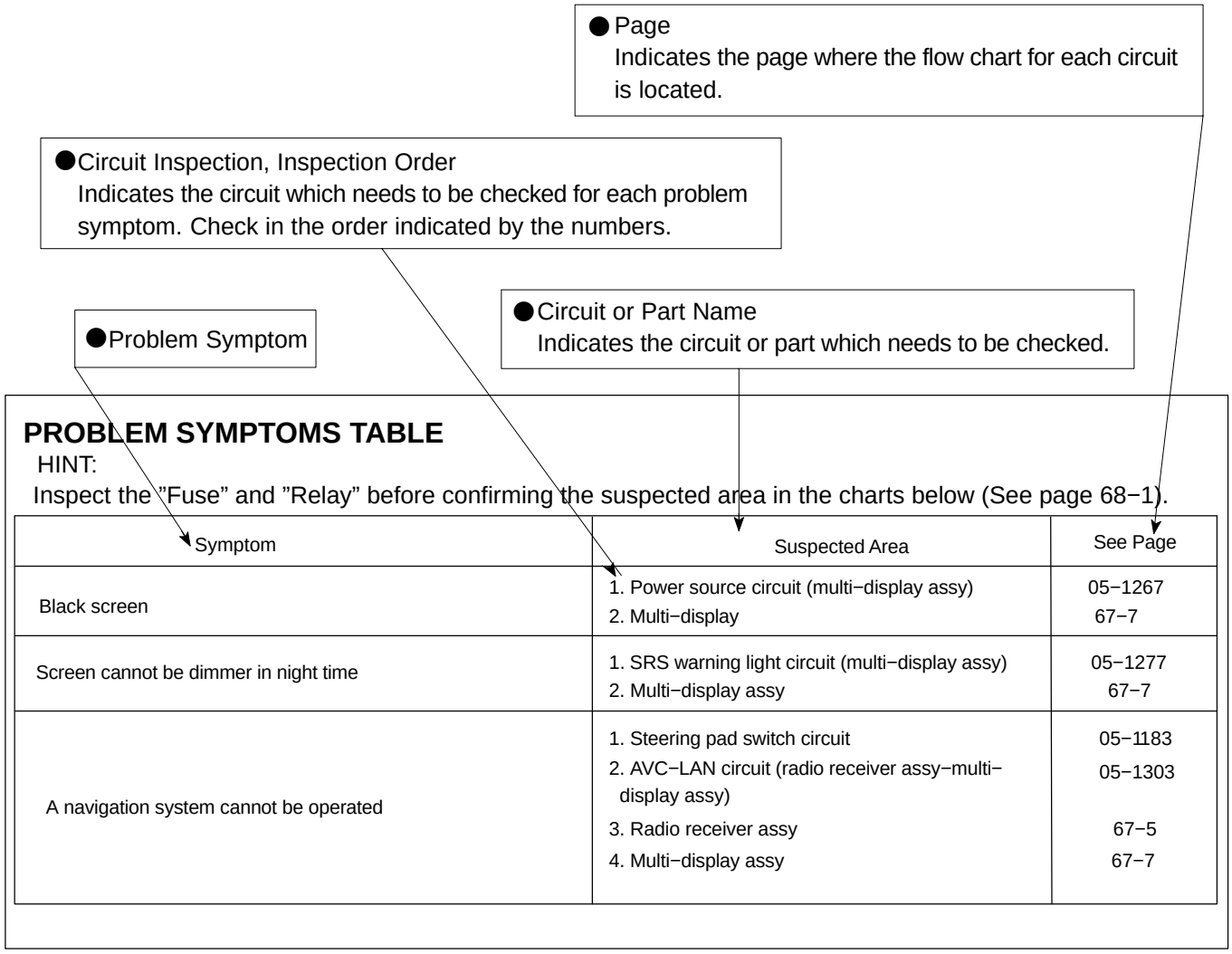

PROBLEM SYMPTOMS TABLE

HINT:

Inspect the ”Fuse” and ”Relay” before confirming the suspected area in the charts below (See page 68−1).

Symptom	Suspected Area	See Page
Black screen	1. Power source circuit (multi−display assy) 2. Multi−display	05−1267 67−7
Screen cannot be dimmer in night time	1. SRS warning light circuit (multi−display assy) 2. Multi−display assy	05−1277 67−7
A navigation system cannot be operated	1. Steering pad switch circuit 2. AVC−LAN circuit (radio receiver assy−multi−display assy) 3. Radio receiver assy 4. Multi−display assy	05−1183 05−1303 67−5 67−7

CIRCUIT INSPECTION

How to read and use each page is shown below.

●Circuit Description
The major role, operation of the circuit and its component parts are explained.

●Diagnostic Trouble Code No. and Detection Item

●Indicates the diagnostic trouble codes, diagnostic trouble code settings and suspect areas for a problem.

●Inspection Procedures
Use the inspection procedures to determine if the circuit is normal or abnormal. If it is abnormal, use it to determine whether the problem is located in the sensors, actuators, wire harness or ECU.

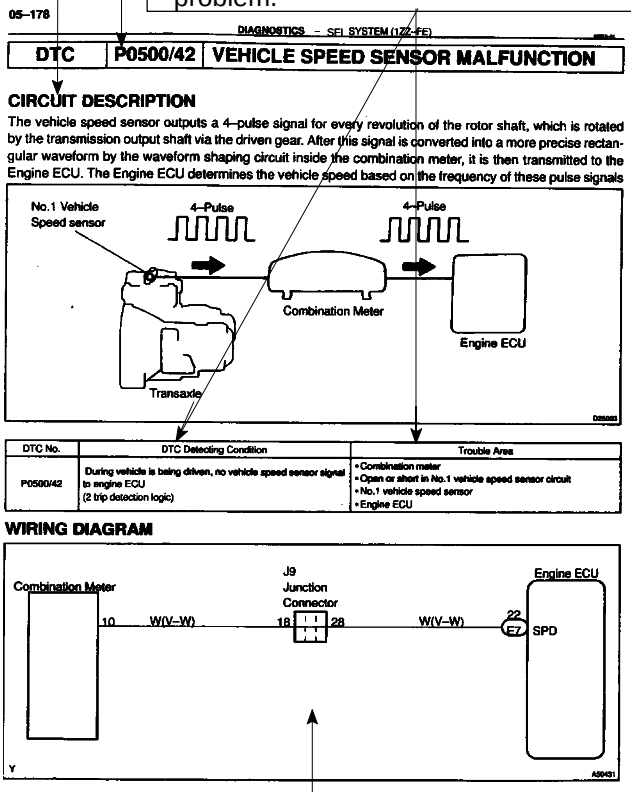

05–178

DIAGNOSTICS – SFI SYSTEM (1ZZ–FE)

DTC P0500/42 VEHICLE SPEED SENSOR MALFUNCTION

CIRCUIT DESCRIPTION

The vehicle speed sensor outputs a 4–pulse signal for every revolution of the rotor shaft, which is rotated by the transmission output shaft via the driven gear. After this signal is converted into a more precise rectangular waveform by the waveform shaping circuit inside the combination meter, it is then transmitted to the Engine ECU. The Engine ECU determines the vehicle speed based on the frequency of these pulse signals

DTC No.	DTC Detecting Condition	Trouble Area
P0500/42	During vehicle is being driven, no vehicle speed sensor signal to engine ECU (2 trip detection logic)	• Combination meter • Open or short in No.1 vehicle speed sensor circuit • No.1 vehicle speed sensor • Engine ECU

WIRING DIAGRAM

●Wiring Diagram
This shows a wiring diagram of the circuit.
Use this diagram together with ELECTRICAL WIRING DIAGRAM to thoroughly understand the circuit.
Wire colors are indicated by an alphabetical code.
B = Black, L = Blue, R = Red, BR = Brown,
LG = Light Green, V = Violet, G = Green,
O = Orange, W = White, GR = Gray, P = Pink,
Y = Yellow, SB = Sky Blue
The first letter indicates the basic wire color and the second letter indicates the color of the stripe.

05–179

DIAGNOSTICS – SFI SYSTEM (1ZZ–FE)

INSPECTION PROCEDURE

1 READ VALUE OF VEHICLE SPEED VALUE(SPEEDOMETER OPERATION)

(a) Select data monitor on the hand–held tester.
(b) Perform a test drive of the vehicle.
(c) Read the vehicle speed on the hand–held tester.
RESULT: The same as the speed displayed on the speed meter.

NG → **REPLACE COMBINATION METER ASSY**

OK

2 INSPECT ECU

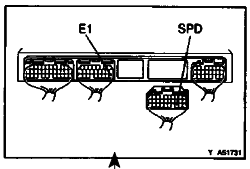

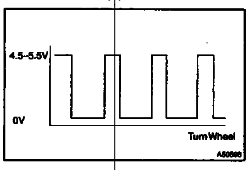

(a) Check the output waveform.
HINT:
Using the oscilloscope function of hand–held tester, it is possible to check the function between the engine ECU and the knock control sensor. The waveform shown in the illustration is an example without noise and chattering.
(1) Connect the hand–held tester between the terminals SPD of the engine ECU E7 connector and E1 of the engine ECU E8 connector.
(2) Select the oscilloscope function on the hand–held tester. (Refer to the hand–held tester's instruction book for operating instructions.)
RESULT: Voltage is intermittently generated

ITEM	CONTENTS
TERMINAL	SPD⇔E1
EQUIPMENT SET	5V/DIV, 20ms/DIV
CONDITION	Running at 20 km/h

HINT:
- The multitude gets shorter as the engine speed becomes faster.

OK → **CHECK AND REPLACE ECU**

NG

●Indicates the condition of the connector of the ECU during the check.

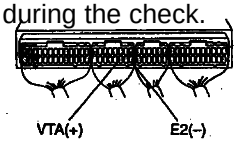

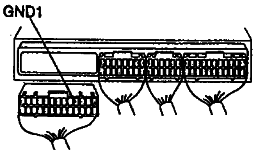

Connector being checked is connected.

Connections of tester are indicated by (+), (–) after terminals name.

Connector being checked is disconnected.

For inspection of connector with body ground, there is nothing about the body ground written down.

D25842

01046−09

ELECTRONIC CIRCUIT INSPECTION PROCEDURE

1. BASIC INSPECTION

(a) RESISTANCE MEASURING CONDITION OF ELECTRONIC PARTS

(1) Unless stated, all resistance is measured at an ambient temperature of 20°C (68°F). Resistances measured may be outside the specifications if measured at high temperatures, i.e. immediately after the vehicle has been running. Measurements should be made after the engine has cooled down.

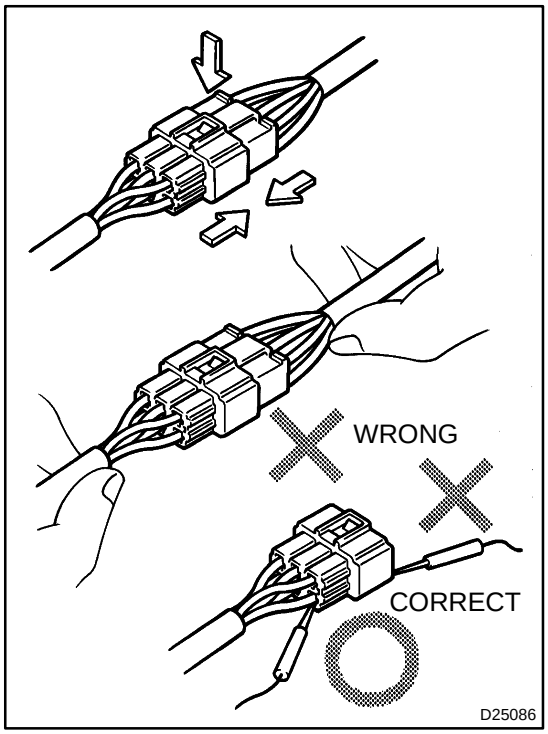

(b) HANDLING CONNECTORS

(1) When disconnecting a connector, first squeeze the mating halves tightly together to release the lock, then press the lock claw and separate the connector.

(2) When disconnecting a connector, do not pull on the harnesses. Grasp the connector directly and separate it.

(3) Before connecting the connector, check that there are no deformed, damaged, loose or missing terminals.

(4) When connecting a connector, press firmly until you hear the lock close with a ”click” sound.

(5) If checking the connector with a TOYOTA electrical tester, check it from the backside (harness side) of the connector using a mini test lead.

NOTICE:

- **As a waterproof connector cannot be checked from the backside, check by connecting a sub−harness.**
- **Do not damage the terminals by moving the inserted tester needle.**

(c) CHECKING CONNECTORS

(1) Checking when the connector is connected:
Squeeze the connector together to confirm that it is fully inserted and locked.

(2) Checking when the connector is disconnected:
Check by pulling the wire harness lightly from the backside of the connector. Look for unlatched terminals, missing terminals, loose crimps or broken conductor wires.
Check visually for corrosion, metallic or foreign objects and water; and bent, rusted, overheated, contaminated, and deformed terminals.

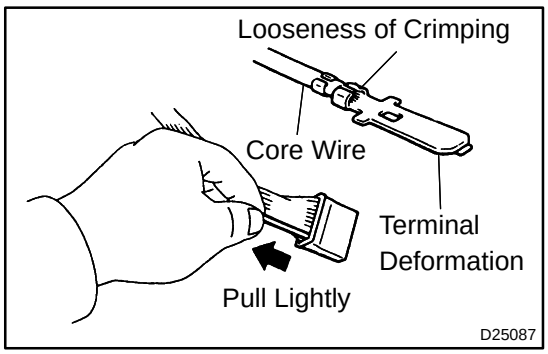

NOTICE:

When testing a gold−plated female terminal, always use a gold−plated male terminal.

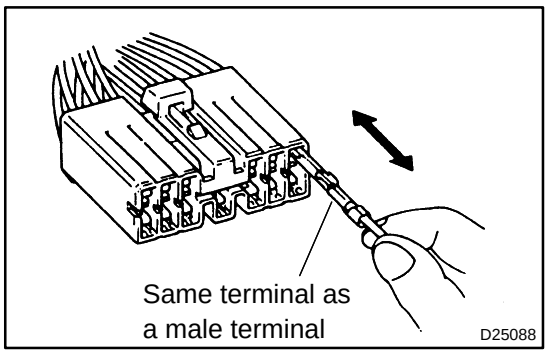

(3) Checking the contact pressure of the terminal:
Prepare a spare male terminal. Insert it into a female terminal, and check for good tension when inserting and after full engagement.

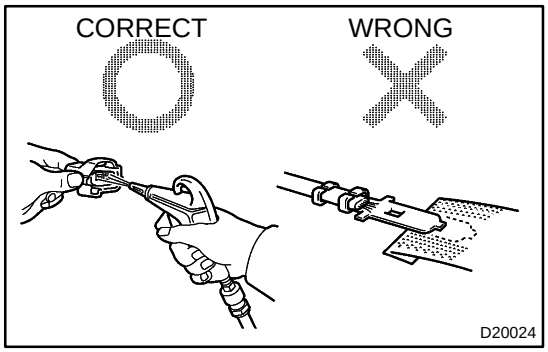

(d) REPAIR METHOD OF CONNECTOR TERMINAL
(1) If there is any dirt on the terminal, clean the contact point using an air gun or shop rag. Never polish the contact point using a sandpaper as the platings may come off.
(2) If there is abnormal contact pressure, replace the female terminal. If the male terminal is gold−plated (gold color), use a gold−plated female terminal; if it is silver−plated (silver color), use a silver−plated female terminal.
(3) Damaged, deformed, or corroded terminals should be replaced. If the terminal will not lock into the housing, the housing may have to be replaced.

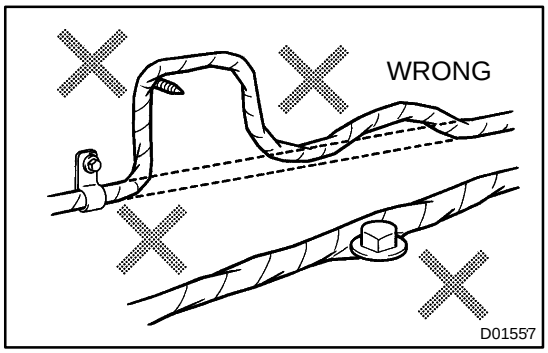

(e) HANDLING OF WIRE HARNESS
(1) If removing a wire harness, check the wiring and clamping before proceeding so that it can be restored in the same way.
(2) Never twist, pull or slacken the wire harness more than necessary.
(3) Never make the wire harness come into contact with a high temperature part, rotating, moving, vibrating or sharp−edged parts. Avoid panel edges, screw tips and similar sharp items.
(4) When installing parts, never pinch the wire harness.
(5) Never cut or break the cover of the wire harness. If it is cut or broken, replace it or securely repair it with vinyl tape.

Fig. 1

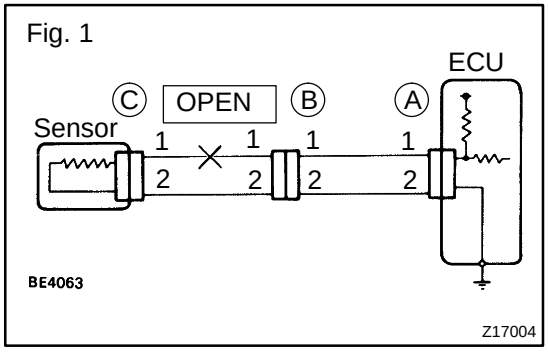

2. CHECK OPEN CIRCUIT

(a) For an open circuit in the wire harness in Fig. 1, perform a resistance check (step b) or a voltage check (step c).

Fig. 2

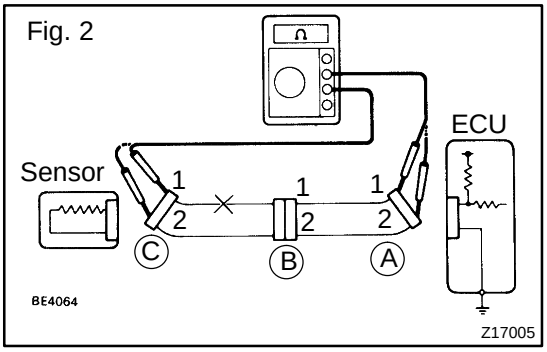

(b) Check the resistance.

(1) Disconnect connectors A and C and measure the resistance between them.

Resistance: Below 1 Ω

HINT:

Measure the resistance while lightly shaking the wire harness vertically and horizontally.

Fig. 2:

Between terminal 1 of connector A and terminal 1 of connector C → 10 kΩ or higher

Between terminal 2 of connector A and terminal 2 of connector C → Below 1 Ω

If your results match the examples above, an open circuit exists between terminal 1 of connector A and terminal 1 of connector C.

Fig. 3

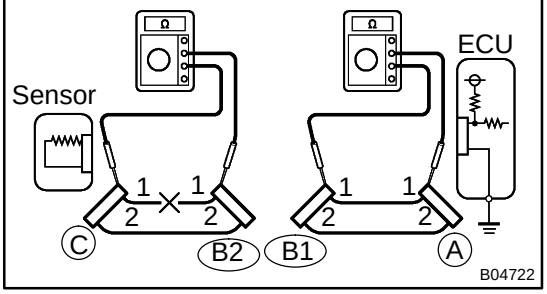

(2) Disconnect connector B and measure the resistance between the connectors.

Fig. 3:

Between terminal 1 of connector A and terminal 1 of connector B1 → Below 1 Ω

Between terminal 1 of connector B2 and terminal 1 of connector C → 10 kΩ or higher

If your results match the examples above, an open circuit exists between terminal 1 of connector B2 and terminal 1 of connector C.

Fig. 4

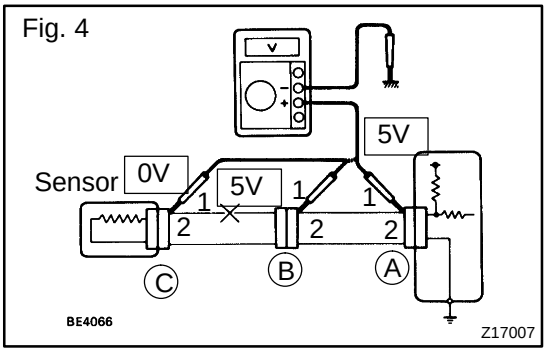

(c) Check the voltage.

(1) In a circuit in which voltage is applied to the ECU connector terminal, an open circuit can be checked by conducting a voltage check.

Fig. 4:

With each connector still connected, measure the voltage between the body ground and terminal 1 of connector A at the ECU 5 V output terminal, terminal 1 of connector B and terminal 1 of connector C, in that order.

(2) Example results:

5 V: Between terminal 1 of connector A and body ground

5 V: Between terminal 1 of connector B and body ground

0 V: Between terminal 1 of connector C and body ground

If your results match the examples above, an open circuit exists in the wire harness between terminal 1 of B and terminal 1 of C.

Fig. 5

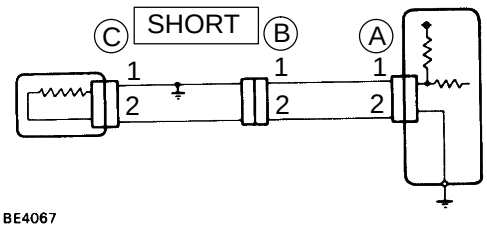

3. CHECK SHORT CIRCUIT

(a) If the wire harness is ground shorted (Fig. 5), locate the section by conducting a resistance check with the body ground (below).

Fig. 6

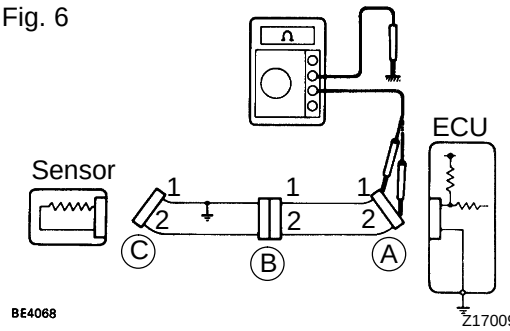

(b) Check the resistance with the body ground.

(1) Disconnect connectors A and C and measure the resistance between terminals 1 and 2 of connector A and the body ground.

Resistance: 10 kΩ or higher

HINT:

Measure the resistance while lightly shaking the wire harness vertically and horizontally.

Fig. 6:

Between terminal 1 of connector A and body ground → Below 1 Ω

Between terminal 2 of connector A and body ground → 10 kΩ or higher

If your results match the examples above, a short circuit exists between terminal 1 of connector A and terminal 1 of connector C.

Fig. 7

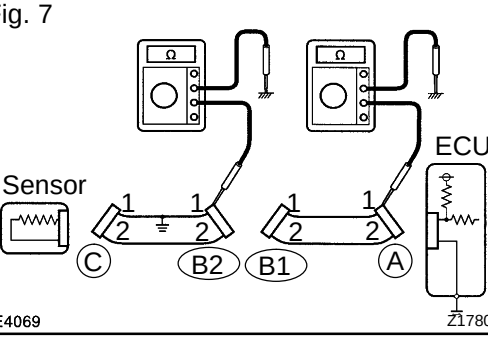

(2) Disconnect connector B and measure the resistance between terminal 1 of connector A and the body ground, and terminal 1 of connector B2 and the body ground.

Fig. 7:

Between terminal 1 of connector A and body ground → 10 kΩ or higher

Between terminal 1 of connector B2 and body ground → Below 1 Ω

If your results match the examples above, a short circuit exists between terminal 1 of connector B2 and terminal 1 of connector C.

4. CHECK AND REPLACE ECU

NOTICE:

- **Start an inspection of the connector from the backside of the connector at the wire harness side with the connector connected to the ECU.**
- **When no measuring condition is specified, perform the inspection with the engine stopped and the ignition switch ON.**
- **Check that the connectors are fully seated. Check for loose, corroded or broken wires.**

(a) First check the ECU ground circuit. If it is faulty, repair it. If it is normal, the ECU could be faulty. Replace the ECU with a normal functioning one and check if the symptoms occur. If the trouble symptoms stop, replace the ECU.

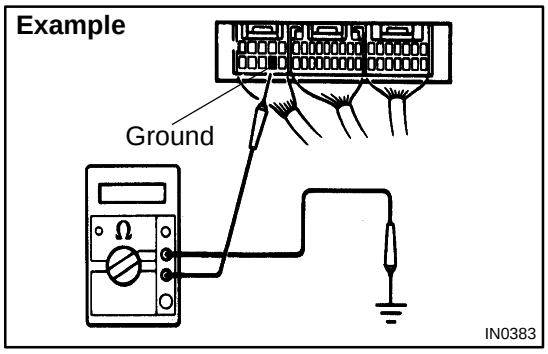

(1) Measure the resistance between the ECU ground terminal and body ground.

Resistance: Below 1 Ω

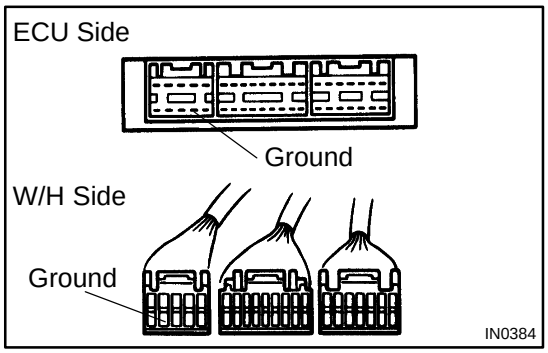

(2) Disconnect the ECU connector. Check the ground terminals (on the ECU side and wire harness side) for evidence of bending, corrosion or foreign material. Lastly check the contact pressure of the female terminals.

TERMS

01047−09

ABBREVIATIONS USED IN THIS MANUAL

Abbreviations	Meaning
ABS	Anti−Lock Brake System
A/C	Air Conditioner
AC	Alternating Current
ACC	Accessory
ACIS	Acoustic Control Induction System
ACSD	Automatic Cold Start Device
A.D.D.	Automatic Disconnecting Differential
A/F	Air−Fuel Ratio
AHC	Active Height Control Suspension
ALR	Automatic Locking Retractor
ALT	Alternator
AMP	Amplifier
ANT	Antenna
APPROX.	Approximately
ASSY	Assembly
A/T, ATM	Automatic Transmission (Transaxle)
ATF	Automatic Transmission Fluid
AUTO	Automatic
AUX	Auxiliary
AVG	Average
AVS	Adaptive Variable Suspension
B+	Battery Voltage
BA	Brake Assist
BACS	Boost Altitude Compensation System
BAT	Battery
BDC	Bottom Dead Center
B/L	Bi−Level
B/S	Bore−Stroke Ratio
BTDC	Before Top Dead Center
BVSV	Bimetallic Vacuum Switching Valve
Calif.	California
CB	Circuit Breaker
CCo	Catalytic Converter For Oxidation
CD	Compact Disc
CF	Cornering Force
CG	Center Of Gravity
CH	Channel
CKD	Complete Knock Down
COMB.	Combination
CPE	Coupe
CPS	Combustion Pressure Sensor
CPU	Central Processing Unit
CRS	Child Restraint System
CTR	Center
C/V	Check Valve
CV	Control Valve
CW	Curb Weight
DC	Direct Current

Abbreviations	Meaning
DEF	Defogger
DFL	Deflector
DIFF.	Differential
DIFF. LOCK	Differential Lock
D/INJ	Direct Injection
DLC	Data Link Connector
DLI	Distributorless Ignition
DOHC	Double Overhead Camshaft
DP	Dash Pot
DS	Dead Soak
DSP	Digital Signal Processor
DTC	Diagnostic Trouble Code
DVD	Digital Versatile Disc
EBD	Electric Brake Force Distribution
ECAM	Engine Control And Measurement System
ECD	Electronically Controlled Diesel
ECDY	Eddy Current Dynamometer
ECT	Electronic Control Transmission
ECU	Electronic Control Unit
ED	Electro−Deposited Coating
EDU	Electronic Driving Unit
EDIC	Electric Diesel Injection Control
EFI	Electronic Fuel Injection
E/G	Engine
EGR	Exhaust Gas Recirculation
EGR−VM	EGR−Vacuum Modulator
ELR	Emergency Locking Retractor
EMPS	Electric Motor Power Steering
ENG	Engine
ES	Easy & Smooth
ESA	Electronic Spark Advance
ETCS−i	Electronic Throttle Control System−intelligent
EVAP	Evaporative Emission Control
EVP	Evaporator
E−VRV	Electric Vacuum Regulating Valve
EX	Exhaust
FE	Fuel Economy
FF	Front−Engine Front−Wheel−Drive
F/G	Fuel Gauge
FIPG	Formed In Place Gasket
FL	Fusible Link
F/P	Fuel Pump
FPU	Fuel Pressure Up
Fr	Front
F/W	Flywheel
FW/D	Flywheel Damper
FWD	Front−Wheel−Drive
GAS	Gasoline
GND	Ground
GSA	Gear Shift Actuator
GPS	Global Positioning System

Abbreviations	Meaning
HAC	High Altitude Compensator
H/B	Hatchback
H−FUSE	High Current Fuse
HI	High
HID	High Intensity Discharge (Head Lamp)
HPU	Hydraulic Power Unit
HSG	Housing
HT	Hard Top
HV	Hybrid Vehicle
HWS	Heated Windshield System
IC	Integrated Circuit
IDI	Indirect Diesel Injection
IFS	Independent Front Suspension
IG	Ignition
IIA	Integrated Ignition Assembly
IN	Intake (Manifold, Valve)
INT	Intermittent
I/P	Instrument Panel
IRS	Independent Rear Suspension
ISC	Idle Speed Control
J/B	Junction Block
J/C	Junction Connector
KD	Kick−Down
LAN	Local Area Network
LB	Liftback
LCD	Liquid Crystal Display
LED	Light Emitting Diode
LH	Left−Hand
LHD	Left−Hand Drive
L/H/W	Length, Height, Width
LLC	Long−Life Coolant
LNG	Liquified Natural Gas
LO	Low
LPG	Liquified Petroleum Gas
LSD	Limited Slip Differential
LSP & PV	Load Sensing Proportioning And Bypass Valve
LSPV	Load Sensing Proportioning Valve
MAP	Manifold Absolute Pressure
MAX.	Maximum
MIC	Microphone
MIL	Malfunction Indicator Lamp
MIN.	Minimum
MG1	Motor Generator No.1
MG2	Motor Generator No.2
MP	Multipurpose
MPI	Multipoint Electronic Injection
MPX	Multiplex Communication System
M/T, MTM	Manual Transmission (Transaxle)
MT	Mount
MTG	Mounting
N	Neutral

Abbreviations	Meaning
NA	Natural Aspiration
No.	Number
O2S	Oxygen Sensor
OC	Oxidation Catalyst
O/D	Overdrive
OEM	Original Equipment Manufacturing
OHC	Overhead Camshaft
OHV	Overhead Valve
OPT	Option
ORVR	On−board Refilling Vapor Recovery
O/S	Oversize
PBD	Power Back Door
P & BV	Proportioning And Bypass Valve
PCS	Power Control System
PCV	Positive Crankcase Ventilation
PKB	Parking Brake
PPS	Progressive Power Steering
PROM	Programmable Read Only Memory
PS	Power Steering
PSD	Power Slide Door
PTC	Positive Temperature Coefficient
PTO	Power Take−Off
P/W	Power Window
PZEV	Partial Zero Emission Vehicle
R & P	Rack And Pinion
RAM	Random Access Memory
R/B	Relay Block
RBS	Recirculating Ball Type Steering
R/F	Reinforcement
RFS	Rigid Front Suspension
RH	Right−Hand
RHD	Right−Hand Drive
RLY	Relay
ROM	Read Only Memory
Rr	Rear
RRS	Rigid Rear Suspension
RSE	Rear Seat Entertainment
RWD	Rear−Wheel Drive
SC	Supercharger
SCV	Swirl Control Valve
SDN	Sedan
SEN	Sensor
SICS	Starting Injection Control System
SOC	State Of Charge
SOHC	Single Overhead Camshaft
SPEC	Specification
SPI	Single Point Injection
SRS	Supplemental Restraint System
SSM	Special Service Materials
SST	Special Service Tools
STD	Standard

Abbreviations	Meaning
STJ	Cold−Start Fuel Injection
SW	Switch
SYS	System
T/A	Transaxle
TACH	Tachometer
TBI	Throttle Body Electronic Fuel Injection
TC	Turbocharger
TCCS	TOYOTA Computer−Controlled System
TCV	Timing Control Valve
TDC	Top Dead Center
TEMP.	Temperature
TEMS	TOYOTA Electronically Modulated Suspension
TFT	Toyota Free−Tronic
TIS	Total Information System For Vehicle Development
T/M	Transmission
TMC	TOYOTA Motor Corporation
TMMK	TOYOTA Motor Manufacturing Kentucky, Inc.
TRAC	Traction Control System
TURBO	Turbocharge
TWC	Three−Way Catalyst
U/D	Underdrive
U/S	Undersize
VCV	Vacuum Control Valve
VENT	Ventilator
VGRS	Variable Gear Ratio Steering
VIN	Vehicle Identification Number
VPS	Variable Power Steering
VSC	Vehicle Stability Control
VSV	Vacuum Switching Valve
VTV	Vacuum Transmitting Valve
VVT−i	Variable Valve Timing−intelligent
w/	With
WGN	Wagon
W/H	Wire Harness
w/o	Without
WU−TWC	Warm Up Three−way Catalytic Converter
WU−OC	Warm Up Oxidation Catalytic Converter
1st	First
2nd	Second
2WD	Two Wheel Drive Vehicle (4 x 2)
3rd	Third
4th	Fourth
4WD	Four Wheel Drive Vehicle (4 x 4)
4WS	Four Wheel Steering System
5th	Fifth

01048−09

GLOSSARY OF SAE AND TOYOTA TERMS

This glossary lists all SAE−J1930 terms and abbreviations used in this manual in compliance with SAE recommendations, as well as their TOYOTA equivalents.

SAE ABBREVIATIONS	SAE TERMS	TOYOTA TERMS ( )−−ABBREVIATIONS
A/C	Air Conditioning	Air Conditioner
ACL	Air Cleaner	Air Cleaner (A/CL)
AIR	Secondary Air Injection	Air Injection (AI)
AP	Accelerator Pedal	−
B+	Battery Positive Voltage	Battery Voltage (+B)
BARO	Barometric Pressure	High Altitude Compensator (HAC)
CAC	Charge Air Cooler	Intercooler
CARB	Carburetor	Carburetor
CFI	Continuous Fuel Injection	−
CKP	Crankshaft Position	Crank Angle
CL	Closed Loop	Closed Loop
CMP	Camshaft Position	Cam Angle
CPP	Clutch Pedal Position	−
CTOX	Continuous Trap Oxidizer	−
CTP	Closed Throttle Position	LL ON, Idle ON
DFI	Direct Fuel Injection	Direct Injection (D/INJ)
DI	Distributor Ignition	−
DLC1 DLC2 DLC3	Data Link Connector 1 Data Link Connector 2 Data Link Connector 3	1: Check Connector 2: Total Diagnosis Communication Link (TDCL) 3: OBD II Diagnostic Connector
DTC	Diagnostic Trouble Code	Diagnostic Trouble Code
DTM	Diagnostic Test Mode	−
ECL	Engine Coolant Level	−
ECM	Engine Control Module	Engine ECU (Electronic Control Unit)
ECT	Engine Coolant Temperature	Coolant Temperature, Water Temperature (THW)
EEPROM	Electrically Erasable Programmable Read Only Memory	Electrically Erasable Programmable Read Only Memory (EEPROM), Erasable Programmable Read Only Memory (EPROM)
EFE	Early Fuel Evaporation	Cold Mixture Heater (CMH), Heat Control Valve (HCV)
EGR	Exhaust Gas Recirculation	Exhaust Gas Recirculation (EGR)
EI	Electronic Ignition	Distributorless Ignition (DLI)
EM	Engine Modification	Engine Modification (EM)
EPROM	Erasable Programmable Read Only Memory	Programmable Read Only Memory (PROM)
EVAP	Evaporative Emission	Evaporative Emission Control (EVAP)
FC	Fan Control	−
FEEPROM	Flash Electrically Erasable Programmable Read Only Memory	−
FEPROM	Flash Erasable Programmable Read Only Memory	−
FF	Flexible Fuel	−
FP	Fuel Pump	Fuel Pump
GEN	Generator	Alternator
GND	Ground	Ground (GND)

HO2S	Heated Oxygen Sensor	Heated Oxygen Sensor (HO_2S)
IAC	Idle Air Control	Idle Speed Control (ISC)
IAT	Intake Air Temperature	Intake or Inlet Air Temperature
ICM	Ignition Control Module	−
IFI	Indirect Fuel Injection	Indirect Injection (IDL)
IFS	Inertia Fuel−Shutoff	−
ISC	Idle Speed Control	−
KS	Knock Sensor	Knock Sensor
MAF	Mass Airflow	Air Flow Meter
MAP	Manifold Absolute Pressure	Manifold Pressure Intake Vacuum
MC	Mixture Control	Electric Bleed Air Control Valve (EBCV) Mixture Control Valve (MCV) Electric Air Control Valve (EACV)
MDP	Manifold Differential Pressure	−
MFI	Multiport Fuel Injection	Electronic Fuel Injection (EFI)
MIL	Malfunction Indicator Lamp	Check Engine Lamp
MST	Manifold Surface Temperature	−
MVZ	Manifold Vacuum Zone	−
NVRAM	Non−Volatile Random Access Memory	−
O2S	Oxygen Sensor	Oxygen Sensor, O_2 Sensor (O_2S)
OBD	On−Board Diagnostic	On−Board Diagnostic System (OBD)
OL	Oxidation Catalytic Converter	Oxidation Catalyst Convert (OC) Catalytic Converter for Oxidation (CCo)
OP	Open Loop	Open Loop
PAIR	Pulsed Secondary Air Injection	Air Suction (AS)
PCM	Powertrain Control Module	−
PNP	Park/Neutral Position	−
PROM	Programmable Read Only Memory	−
PSP	Power Steering Pressure	−
PTOX	Periodic Trap Oxidizer	Diesel Particulate Filter (DPF) Diesel Particulate Trap (DPT)
RAM	Random Access Memory	Random Access Memory (RAM)
RM	Relay Module	−
ROM	Read Only Memory	Read Only Memory (ROM)
RPM	Engine Speed	Engine Speed
SC	Supercharger	Supercharger
SCB	Supercharger Bypass	Electronic Air Bypass Valve (E−ABV)
SFI	Sequential Multiport Fuel Injection	Electronic Fuel Injection (EFI), Sequential Injection
SPL	Smoke Puff Limiter	−
SRI	Service Reminder Indicator	−
SRT	System Readiness Test	−
ST	Scan Tool	−
TB	Throttle Body	Throttle Body
TBI	Throttle Body Fuel Injection	Single Point Injection Central Fuel Injection (Ci)
TC	Turbocharger	Turbocharger

TCC	Torque Converter Clutch	Torque Converter
TCM	Transmission Control Module	Transmission ECU, ECT ECU
TP	Throttle Position	Throttle Position
TR	Transmission Range	−
TVV	Thermal Vacuum Valve	Bimetallic Vacuum Switching Valve (BVSV) Thermostatic Vacuum Switching Valve (TVSV)
TWC	Three−Way Catalytic Converter	Three−Way Catalytic (TWC) Manifold Converter CC_{RO}
TWC+OC	Three−Way + Oxidation Catalytic Converter	CC_R + CCo
VAF	Volume Airflow	Air Flow Meter
VR	Voltage Regulator	Voltage Regulator
VSS	Vehicle Speed Sensor	Vehicle Speed Sensor
WOT	Wide Open Throttle	Full Throttle
WU−OC	Warm Up Oxidation Catalytic Converter	−
WU−TWC	Warm Up Three−Way Catalytic Converter	−
3GR	Third Gear	−
4GR	Fourth Gear	−

STANDARD BOLT

HOW TO DETERMINE BOLT STRENGTH

0307K−02

Bolt Type				Class
Hexagon Head Bolt		Stud Bolt	Weld Bolt	
Normal Recess Bolt	Deep Recess Bolt			
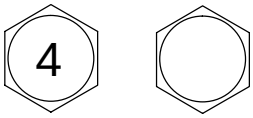 No Mark	 No Mark	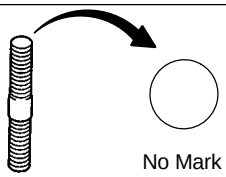 No Mark	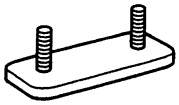	4T
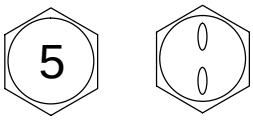	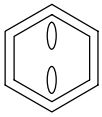			5T
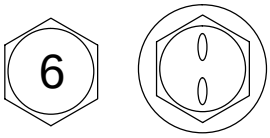 w/ Washer	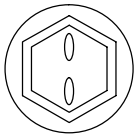 w/ Washer			6T
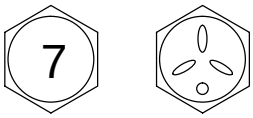	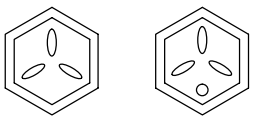			7T
				8T
				9T
	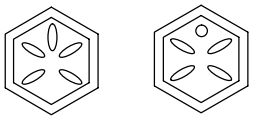			10T
	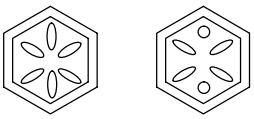			11T

B06431

0307L−02

SPECIFIED TORQUE FOR STANDARD BOLTS

Class	Diameter mm	Pitch mm	Specified torque					
			Hexagon head bolt			Hexagon flange bolt		
			N·m	kgf·cm	ft·lbf	N·m	kgf·cm	ft·lbf
4T	6	1	5	55	48 in.·lbf	6	60	52 in.·lbf
	8	1.25	12.5	130	9	14	145	10
	10	1.25	26	260	19	29	290	21
	12	1.25	47	480	35	53	540	39
	14	1.5	74	760	55	84	850	61
	16	1.5	115	1,150	83	−	−	−
5T	6	1	6.5	65	56 in.·lbf	7.5	75	65 in.·lbf
	8	1.25	15.5	160	12	17.5	175	13
	10	1.25	32	330	24	36	360	26
	12	1.25	59	600	43	65	670	48
	14	1.5	91	930	67	100	1,050	76
	16	1.5	140	1,400	101	−	−	−
6T	6	1	8	80	69 in.·lbf	9	90	78 in.·lbf
	8	1.25	19	195	14	21	210	15
	10	1.25	39	400	29	44	440	32
	12	1.25	71	730	53	80	810	59
	14	1.5	110	1,100	80	125	1,250	90
	16	1.5	170	1,750	127	−	−	−
7T	6	1	10.5	110	8	12	120	9
	8	1.25	25	260	19	28	290	21
	10	1.25	52	530	38	58	590	43
	12	1.25	95	970	70	105	1,050	76
	14	1.5	145	1,500	108	165	1,700	123
	16	1.5	230	2,300	166	−	−	−
8T	8	1.25	29	300	22	33	330	24
	10	1.25	61	620	45	68	690	50
	12	1.25	110	1,100	80	120	1,250	90
9T	8	1.25	34	340	25	37	380	27
	10	1.25	70	710	51	78	790	57
	12	1.25	125	1,300	94	140	1,450	105
10T	8	1.25	38	390	28	42	430	31
	10	1.25	78	800	58	88	890	64
	12	1.25	140	1,450	105	155	1,600	116
11T	8	1.25	42	430	31	47	480	35
	10	1.25	87	890	64	97	990	72
	12	1.25	155	1,600	116	175	1,800	130

0307M−02

HOW TO DETERMINE NUT STRENGTH

Nut Type			Class
Present Standard Hexagon Nut	Old Standard Hexagon Nut		
	Cold Forging Nut	Cutting Processed Nut	
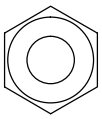 No Mark			4N
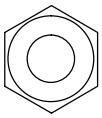 No Mark (w/ Washer)	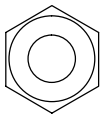 No Mark (w/ Washer)	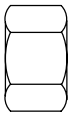 No Mark	5N (4T)
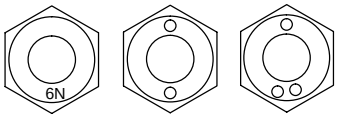 6N			6N
	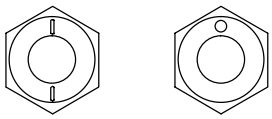	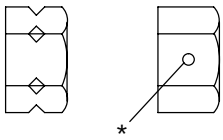 *	7N (5T)
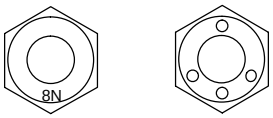 8N			8N
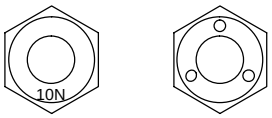 10N	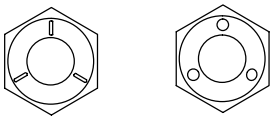	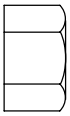 No Mark	10N (7T)
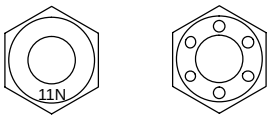 11N			11N
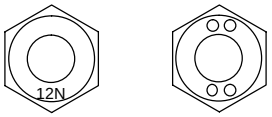 12N			12N

*: Nut with 1 or more marks on one side surface of the nut.

B06432

HINT:

Use the nut with the same number of the nut strength classification or the greater than the bolt strength classification number when tightening parts with a bolt and nut.

Example: Bolt = 4T

Nut = 4N or more

ENGINE CONTROL SYSTEM

030EL−04

SERVICE DATA

2AZ−FE:

Throttle body		
Standard throttle valve opening percentage		60% or more
Accelerator pedal position sensor		
Standard voltage		0.6 to 1.0 V
Intake air flow meter assy		
Resistance	4 (THA) − 5 (E2)	
	at −20°C (−4°F)	13.6 to 18.4 kΩ
	at 20°C (68°F)	2.21 to 2.69 kΩ
	at 60°C (140°F)	0.493 to 0.667 kΩ
Camshaft timing oil control valve assy		
Resistance	at 20°C (68°F)	6.9 to 7.9 Ω
Accelerator pedal rod assy		
Resistance	2 (VPA2) − 3 (EP1)	5.0 kΩ or less
	5 (VPA1) − 1 (EP2)	5.0 kΩ or less
	6 (VCP1) − 3 (EP1)	2.25 to 4.75 kΩ
	4 (VCP2) − 1 (EP2)	2.25 to 4.75 kΩ
Throttle body assy		
Resistance	at 20°C (68°F)	
	2 (M+) − 1 (M−)	0.3 to 100 kΩ
	5 (VC) − 3 (E2)	1.2 to 3.2 kΩ
E.F.I. engine coolant temperature sensor		
Resistance	Approx. 20°C (68°F)	2.32 to 2.59 kΩ
	Approx. 80°C (176°F)	0.310 to 0.326 kΩ
Knock sensor		
Resistance	at 20°C (68°F)	120 to 280 kΩ
EFI relay		
Specified condition	3 − 5	10 kΩ or higher
	3 − 5	Below 1 Ω (when battery voltage is applied to terminals 1 and 2)
C/OPN relay		
Specified condition	3 − 5	10 kΩ or higher
	3 − 5	Below 1 Ω (when battery voltage is applied to terminals 1 and 2)

1MZ−FE/3MZ−FE:

Throttle body		
Standard throttle valve opening percentage		60% or more
Accelerator pedal position sensor		
Standard voltage		0.6 to 1.0 V
Intake air flow meter assy		
Resistance	4 (THA) − 5 (E2)	
	at −20°C (−4°F)	13.6 to 18.4 kΩ
	at 20°C (68°F)	2.21 to 2.69 kΩ
	at 60°C (140°F)	0.493 to 0.667 kΩ
Camshaft timing oil control valve assy		
Resistance	at 20°C (68°F)	6.9 to 7.9 Ω
Accelerator pedal rod assy		
Resistance	2 (VPA2) − 3 (EP1)	5.0 kΩ or less
	5 (VPA1) − 1 (EP2)	5.0 kΩ or less
	6 (VCP1) − 3 (EP1)	2.25 to 4.75 kΩ
	4 (VCP2) − 1 (EP2)	2.25 to 4.75 kΩ
Throttle body assy		
Resistance	at 20°C (68°F)	
	2 (M+) − 1 (M−)	0.3 to 100 kΩ
	5 (VC) − 3 (E2)	2.0 to 4.0 kΩ

E.F.I. engine coolant temperature sensor		
Resistance	Approx. 20●C (68●F)	2.32 to 2.59 kΩ
	Approx. 80●C (176●F)	0.310 to 0.326 kΩ
Knock sensor (1MZ−FE)		
Resistance	terminal − body	10 kΩ or higher
Knock sensor (3MZ−FE)		
Resistance	at 20●C (68●F)	120 to 280 kΩ
EFI relay		
Specified condition	3 − 5	10 kΩ or higher
	3 − 5	Below 1 Ω (when battery voltage is applied to terminals 1 and 2)
C/OPN relay		
Specified condition	3 − 5	10 kΩ or higher
	3 − 5	Below 1 Ω (when battery voltage is applied to terminals 1 and 2)

030EM−04

TORQUE SPECIFICATION

2AZ−FE:

Part Tightened	N·m	kgf·cm	ft·lbf
Throttle body assy x Intake manifold	30	306	22
Knock sensor x Cylinder block sub−assy	20	199	14
Intake manifold x Cylinder head sub−assy	30	306	22
ECM x Instrument panel reinforcement	5.5	56	49 in.·lbf
ECM x Blower assy	5.5	56	49 in.·lbf
Accelerator pedal rod assy x Body	7.5	76	66 in.·lbf

1MZ−FE/3MZ−FE:

Part Tightened	N·m	kgf·cm	ft·lbf
Front suspension upper brace center x Body (w/ Performance Rod)	80	815	59
V−bank cover sub−assy x Cylinder head cover sub−assy LH	7.9	81	70 in.·lbf
Throttle body assy x Intake air connector	11	112	8
Air cleaner cap sub−assy x Air cleaner case sub−assy	5.0	51	44 in.·lbf
Knock sensor x Cylinder block sub−assy 1MZ−FE	39	398	29
Knock sensor x Cylinder block sub−assy 3MZ−FE	20	199	14
Water outlet x Cylinder head sub−assy	15	153	11
Water outlet x Cylinder head LH	15	153	11
Intake manifold x Cylinder head sub−assy	15	153	11
Intake manifold x Cylinder head LH	15	153	11
Ground cable x Intake manifold	8.4	86	74 in.·lbf
ECM x Instrument panel reinforcement	5.5	56	49 in.·lbf
ECM x Blower assy	5.5	56	49 in.·lbf
Accelerator pedal rod assy x Body	7.5	76	66 in.·lbf

FUEL

030EN−04

SERVICE DATA

2AZ−FE:

Fuel pressure		304 to 343 kPa (3.1 to 3.5 kgf/cm^2, 44 to 50 psi)
Fuel pressure		147 kPa (1.5 kgf/cm^2, 21 psi) or more
Fuel injector		
Resistance	at 20°C (68°F)	13.4 to 14.2Ω
Injection volume		76 to 91 cm^2 (4.6 to 5.5 cu in.) per 15 seconds
Difference between each cylinder		15 cm^3 (0.9 cu in.) or less
Fuel leakage		1 drop or less per 12 minutes
Fuel pump		
Resistance	at 20°C (68°F)	0.2 to 3.0 Ω

1MZ−FE/3MZ−FE:

Fuel pressure		304 to 343 kPa (3.1 to 3.5 kgf/cm^2, 44 to 50 psi)
Fuel pressure		147 kPa (1.5 kgf/cm^2, 21 psi) or more
Fuel injector		
Resistance	at 20°C (68°F)	13.4 to 14.2Ω
Injection volume		60 to 73 cm^2 (3.7 to 4.5 cu in.) per 15 seconds
Difference between each cylinder		13 cm^3 (0.8 cu in.) or less
Fuel leakage		1 drop or less per 12 minutes
Fuel pump		
Resistance	at 20°C (68°F)	0.2 to 3.0 Ω

030EO−03

TORQUE SPECIFICATION

2AZ−FE:

Part Tightened	N·m	kgf·cm	ft·lbf
Fuel delivery pipe x Cylinder head	20	204	15
Fuel tank bent tube set plate x Fuel tank assy	5.9	60	52 in.·lbf
Fuel main tube support x Fuel tank assy	5.4	55	48 in.·lbf
Fuel tank band sub−assy No. 1 RH x Body	39	400	29
Fuel tank band sub−assy No. 1 LH x Body	39	400	29
Fuel tank protector lower center x Fuel tank assy	5.4	55	48 in.·lbf
Packing brake cable assy No. 2 x Body	5.4	55	48 in.·lbf
Packing brake cable assy No. 3 x Body	5.4	55	48 in.·lbf
Exhaust pipe assy center x Exhaust pipe assy front	56	571	41
Exhaust pipe assy center x Exhaust pipe assy tail	56	571	41
Floor panel brace rear x Body	20	199	14

1MZ−FE/3MZ−FE:

Part Tightened	N·m	kgf·cm	ft·lbf
Fuel delivery pipe sub−assy x Intake manifold	10	102	7
Fuel delivery pipe No. 2 x Intake manifold	10	102	7
Fuel pipe No. 2 union bolt x Fuel delivery pipe No. 2	33	331	24
Fuel pressure pulsation damper assy x Fuel delivery pipe sub−assy	33	331	24
Fuel pipe sub−assy No. 1 x Intake manifold	20	199	14
Surge tank stay No. 2 x Intake air surge tank	20	199	14
Surge tank stay No. 2 x Cylinder head	20	199	14
Surge tank stay No. 1 x Intake air surge tank	20	199	14
Surge tank stay No. 1 x Cylinder head	20	199	14
Engine hunger No. 1 x Intake air surge tank	20	199	14
Engine hunger No. 1 x Cylinder head	20	199	14
Pressure feed tube assy x Engine hunger No. 1	7.8	80	69 in.·lbf
Intake air surge tank x Intake manifold	28	286	21
Emission control valve set x Emission control valve bracket	8.0	80	71 in.·lbf
Fuel tank bent tube set plate x Fuel tank assy	5.9	60	52 in.·lbf
Fuel main tube support x Fuel tank assy	5.4	55	48 in.·lbf
Fuel tank band sub−assy No. 1 RH x Body	39	400	29
Fuel tank band sub−assy No. 1 LH x Body	39	400	29
Fuel tank protector lower center x Fuel tank assy	5.4	55	48 in.·lbf
Packing brake cable assy No. 2 x Body	5.4	55	48 in.·lbf
Packing brake cable assy No. 3 x Body	5.4	55	48 in.·lbf
Exhaust pipe assy center x Exhaust pipe assy front	56	571	41
Exhaust pipe assy center x Exhaust pipe assy tail	56	571	41
Floor panel brace rear x Body	20	199	14

EMISSION CONTROL

030EP−04

SERVICE DATA

2AZ−FE:

VSV for CCV		
Resistance	at 20 °C (68 °F)	25 to 30 Ω
	at 100 °C (212 °F)	32 to 40 Ω
VSV for EVAP		
Resistance	1 − 2	26 to 30 Ω at 20 °C (68 °F)
	1 − Body ground	10 kΩ or higher
	2 − Body ground	10 kΩ or higher
Air fuel ratio sensor		
Resistance	1 (HT) − 2 (+B)	0.8 to 1.4 Ω at 20 °C (68 °F)
	1 (HT) − 2 (+B)	1.8 to 3.2 Ω at 800 °C (1,472 °F)
Heated oxygen sensor (Bank 1 Sensor 2)		
Resistance	1 (HT) − 2 (+B)	11 to 16 Ω at 20 °C (68 °F)
	1 (HT) − 2 (+B)	23 to 32 Ω at 800 °C (1,472 °F)

1MZ−FE/3MZ−FE:

VSV for CCV		
Resistance	at 20 °C (68 °F)	25 to 30 Ω
	at 100 °C (212 °F)	32 to 40 Ω
VSV for EVAP		
Resistance	1 − 2	26 to 30 Ω at 20 °C (68 °F)
	1 − Body ground	10 kΩ or higher
	2 − Body ground	10 kΩ or higher
Air fuel ratio sensor		
Resistance	1 (HT) − 2 (+B)	0.8 to 1.4 Ω at 20 °C (68 °F)
	1 (HT) − 2 (+B)	1.8 to 3.2 Ω at 800 °C (1,472 °F)
Heated oxygen sensor (Bank 1 Sensor 2)		
Resistance	1 (HT) − 2 (+B)	11 to 16 Ω at 20 °C (68 °F)
	1 (HT) − 2 (+B)	23 to 32 Ω at 800 °C (1,472 °F)
Heated oxygen sensor (Bank 2 Sensor 2)		
Resistance	1 (HT) − 2 (+B)	11 to 16 Ω at 20 °C (68 °F)
	1 (HT) − 2 (+B)	23 to 32 Ω at 800 °C (1,472 °F)

030EQ−03

TORQUE SPECIFICATION

2AZ−FE:

Part Tightened	N·m	kgf·cm	ft·lbf
Charcoal canister assy x Body	39.2	400	29
Ventilation valve sub−assy x Cylinder head cover	19	193	9

1MZ−FE/3MZ−FE:

Part Tightened	N·m	kgf·cm	ft·lbf
Charcoal canister assy x Body	39.2	400	29
Ventilation valve sub−assy x Cylinder head cover	19	193	9

INTAKE

030ER−04

SERVICE DATA

2AZ−FE

Intake manifold runner valve assy		
Standard voltage	IAC valve open	3.0 to 4.2 V
	IAC valve close	0.3 to 1.0 V
Resistance	Terminals 4 and 5 at 20°C (68°F)	3.0 to 10 Ω

1MZ−FE/3MZ−FE

Vacuum switching valve assy for No. 1 (1MZ−FE only) and No. 2		
Resistance	at 20°C (68°F)	33 to 39 Ω
Vacuum switching valve assy for No. 3		
Resistance	at 20°C (68°F)	37 to 44 Ω

030ES−03

TORQUE SPECIFICATION

2AZ−FE

Part Tightened	N·m	kgf·cm	ft·lbf
Intake manifold x Cylinder head	30	306	22
Air cleaner cap sub−assy x Air cleaner case sub−assy	5.0	51	44 in.·lbf
Engine cover sub−assy No. 1 x Cylinder head cover sub−assy	7.0	71	62 in.·lbf

1MZ−FE/3MZ−FE

Part Tightened	N·m	kgf·cm	ft·lbf
Intake air control valve assy x Intake air surge tank (see page 13−12)			
Bolt A and nut A	21	214	15
Bolt B	20	204	15
Intake air control valve assy No. 2 x Intake air surge tank	10	102	7

ENGINE MECHANICAL

030ET−04

SERVICE DATA

2AZ−FE

Ignition timing	w/ Terminals TC and CG of DLC3 connected	8 to 12●BTDC @ idle
	w/ Terminals TC and CG of DLC3 disconnected	5 to 15●BTDC @ idle
Idle speed	M/T	650 to 750 rpm
	A/T	610 to 710 rpm
Compression		
Compression pressure	PZEV	1.300 MPa (13.3 kgf/cm^2, 189 psi)
	Except PZEV	1.360 MPa (13.9 kgf/cm^2, 198 psi)
Minimum pressure	PZEV	1.000 MPa (10.2 kgf/cm^2, 145 psi)
	Except PZEV	0.98 MPa (10 kgf/cm^2, 142 psi)
Difference between each cylinder	PZEV	29 kPa (0.3 kgf/cm^2, 4.3 psi)
	Except PZEV	100 kPa (1.0 kgf/cm^2, 14 psi)
Valve clearance (cold)	Intake	0.19 to 0.29 mm (0.008 to 0.011 in.)
	Exhaust	0.30 to 0.40 mm (0.012 to 0.016 in.)
Balanceshaft		
Specified thrust clearance		0.050 to 0.090 mm (0.0020 to 0.0035 in.)
Specified oil clearance		0.004 to 0.031 mm (0.0002 to 0.0012 in.)
Housing journal bore diameter	Mark 1	26.000 to 26.006 mm (1.0236 to 1.0239 in.)
	Mark 2	26.006 to 26.012 mm (1.0239 to 1.0241 in.)
	Mark 3	26.012 to 26.018 mm (1.0241 to 1.0243 in.)
Journal diameter		22.985 to 23.000 mm (0.9049 to 0.9055 in.)
Bearing center wall thickness	Mark 1	1.486 to 1.489 mm (0.0585 to 0.0586 in.)
	Mark 2	1.489 to 1.492 mm (0.0586 to 0.0587 in.)
	Mark 3	1.492 to 1.495 mm (0.0587 to 0.0589 in.)
Oil pump drive sprocket		
Minimum sprocket diameter (w/ chain)		48.2 mm (1.898 in.)
Oil pump drive shaft sprocket		
Minimum sprocket diameter (w/ chain)		48.2 mm (1.898 in.)
Crankshaft timing sprocket		
Minimum sprcoket diameter (w/ chain)		51.6 mm (2.031 in.)
Chain tensioner slipper		
Maximum wear		1.0 mm (0.039 in.)
Chain vibration damper No. 1		
Maximum wear		1.0 mm (0.039 in.)
Cylinder head set bolt		
Specfied bolt length		161.3 to 164.2 mm (6.350 to 6.465 in.)
Chain sub−assy		
Maximum chain elongation		115.4 mm (4.543 in.)
Camshaft timing gear or sprocket		
Minimum gear or sprocket diameter (w/ chain)		97.3 mm (3.831 in.)
Intake manifold		
Maximum warpage		0.20 mm (0.0079 in.)
Exhaust manifold		
Maximum warpage		0.70 mm (0.0276 in.)

Camshaft (Intake)		
Maximum circle runout		0.03 mm (0.0012 in.)
Specified cam lobe height		46.599 to 46.809 mm (1.8346 to 1.8429 in.)
No. 1 journal diameter		35.971 to 35.985 mm (1.4162 to 1.4167 in.)
Other journal diameter		22.959 to 22.975 mm (0.9039 to 0.9045 in.)
Specified journal thrust clearance		0.040 to 0.110 mm (0.0016 to 0.0043 in.)
Specified journal oil clearance	No. 1 journal bearing mark 1	0.007 to 0.070 mm (0.0003 to 0.0028 in.)
	No. 1 journal bearing mark 2	0.008 to 0.070 mm (0.0003 to 0.0028 in.)
	No. 1 journal bearing mark 3	0.008 to 0.070 mm (0.0003 to 0.0028 in.)
	Other journals	0.025 to 0.100 mm (0.0010 to 0.0039 in.)
Cylinder head journal bore diameter	Mark 1	40.000 to 40.009 mm (1.5748 to 1.5752 in.)
	Mark 2	40.009 to 40.017 mm (1.5752 to 1.5755 in.)
	Mark 3	40.017 to 40.025 mm (1.5755 to 1.5758 in.)
Standard bearing center wall thickness	Mark 1	2.000 to 2.004 mm (0.0787 to 0.0789 in.)
	Mark 2	2.004 to 2.008 mm (0.0789 to 0.0791 in.)
	Mark 3	2.008 to 2.012 mm (0.0791 to 0.0792 in.)
Camshaft journal diameter		35.971 to 35.985 mm (1.4162 to 1.4167 in.)
Camshaft No. 2 (Exhaust)		
Maximum circle runout		0.03 mm (0.0012 in.)
Specified cam lobe height		46.599 to 46.809 mm (1.8346 to 1.8429 in.)
No. 1 journal diameter		35.971 to 35.985 mm (1.4162 to 1.4167 in.)
Other journal diameter		22.959 to 22.975 mm (0.9039 to 0.9045 in.)
Specified thrust clearance		0.080 to 0.150 mm (0.0032 to 0.0059 in.)
Specified journal oil clearance	No. 1 journal	0.040 to 0.100 mm (0.0016 to 0.0039 in.)
	Other journals	0.025 to 0.100 mm (0.0010 to 0.0039 in.)
Cylinder head journal bore diameter	Mark 1	40.000 to 40.009 mm (1.5748 to 1.5752 in.)
	Mark 2	40.009 to 40.017 mm (1.5752 to 1.5755 in.)
	Mark 3	40.017 to 40.025 mm (1.5755 to 1.5758 in.)
Standard bearing center wall thickness	Mark 1	2.000 to 2.004 mm (0.0787 to 0.0789 in.)
	Mark 2	2.004 to 2.008 mm (0.0789 to 0.0791 in.)
	Mark 3	2.008 to 2.012 mm (0.0791 to 0.0792 in.)
Camshaft journal diameter		35.971 to 35.985 mm (1.4162 to 1.4167 in.)
Cylinder head		
Maximum warpage	Cylinder block side	0.05 mm (0.0020 in.)
	Intake manifold side	0.08 mm (0.0031 in.)
	Exhaust manifold side	0.08 mm (0.0031 in.)
Inner compression spring		
Free length		45.7 mm (1.799 in.)
Maximum deviation		1.6 mm (0.063 in.)
Intake valve		
Specified overall length		101.21 to 101.71 mm (3.9846 to 4.0043 in.)
Valve stem diameter		5.470 to 5.485 mm (0.2154 to 0.2159 in.)
Minimum margin thickness		0.50 to 1.45 mm (0.0197 to 0.0571 in.)
Exhaust valve		
Specified overall length		100.70 to 101.15 mm (3.9646 to 3.9823 in.)
Valve stem diameter		5.465 to 5.480 mm (0.2152 to 0.2157 in.)
Minimum margin thickness		0.50 to 1.60 mm (0.0197 to 0.0630 in.)
Intake valve guide bush		
Bush inside diameter		5.510 to 5.530 mm (0.2169 to 0.2177 in.)
Specified bush oil clearance		0.025 to 0.080 mm (0.0010 to 0.0031 in.)
Exhaust valve guide bush		
Bush inside diameter		5.510 to 5.530 mm (0.2169 to 0.2177 in.)
Specified bush oil clearance		0.030 to 0.100 mm (0.0012 to 0.0039 in.)
Valve lifter		
Lifter diameter		30.966 to 30.976 mm (1.2191 to 1.2195 in.)
Lifter bore diameter		31.009 to 31.025 mm (1.2208 to 1.2215 in.)
Specified oil clearance		0.033 to 0.070 mm (0.0013 to 0.0028 in.)
Cylinder block		
Maximum warpage		0.05 mm (0.0020 in.)
Specified cylinder bore diameter		88.500 to 88.633 mm (3.4843 to 3.4894 in.)

Connecting rod		
Specified thrust clearance		0.160 to 0.362 mm (0.0063 to 0.0143 in.)
Specified oil clearance		0.024 to 0.080 mm (0.0009 to 0.0031 in.)
Connecting rod bearing center wall thickness (Reference)	Mark 1	1.485 to 1.488 mm (0.0585 to 0.0586 in.)
	Mark 2	1.488 to 1.491 mm (0.0586 to 0.0587 in.)
	Mark 3	1.491 to 1.494 mm (0.0587 to 0.0588 in.)
Bush inside diameter		22.005 to 22.014 mm (0.8663 to 0.8667 in.)
Bush inside diameter (Reference)	Mark A	22.005 to 22.008 mm (0.8663 to 0.8665 in.)
	Mark B	22.008 to 22.011 mm (0.8665 to 0.8666 in.)
	Mark C	22.011 to 22.014 mm (0.8666 to 0.8667 in.)
Maximum rod out−of−alignment per 100 mm (3.94 in.)		0.05 mm (0.0020 in.)
Maximum rod twist per 100 mm (3.94 in.)		0.15 mm (0.0059 in.)
Piston		
Piston diameter		88.439 to 88.449 mm (3.4818 to 3.4822 in.)
Specified piston oil clearance		0.051 to 0.100 mm (0.0020 to 0.0039 in.)
Piston pin hole bush inside diameter		22.001 to 22.010 mm (0.8662 to 0.8665 in.)
Piston pin hole bush inside diameter (Reference)	Mark 1	22.001 to 22.004 mm (0.8662 to 0.8663 in.)
	Mark 2	22.004 to 22.007 mm (0.8663 to 0.8664 in.)
	Mark 3	22.007 to 22.010 mm (0.8664 to 0.8665 in.)
Piston ring		
Ring groove clearance		0.030 to 0.070 mm (0.0012 to 0.0028 in.)
Specified end gap	No. 1	0.22 to 0.892 mm (0.0087 to 0.0350 in.)
	No. 2	0.50 to 1.35 mm (0.0197 to 0.0531 in.)
	Oil (side rail)	0.10 to 0.73 mm (0.0039 to 0.0287 in.)
Piston pin		
Piston pin diameter		21.997 to 22.009 mm (0.8660 to 0.8665 in.)
Piston pin diameter (Reference)	Mark A	21.997 to 22.000 mm (0.8660 to 0.8661 in.)
	Mark B	22.000 to 22.003 mm (0.8661 to 0.8663 in.)
	Mark C	22.003 to 22.006 mm (0.8663 to 0.8664 in.)
	Mark D	22.006 to 22.009 mm (0.8664 to 0.8665 in.)
Specified oil clearance		0.001 − 0.010 mm (0.00004 − 0.00039 in.)
Connecting rod bolt		
Specified diameter		7.0 to 7.3 mm (0.276 to 0.287 in.)
Crankshaft		
Specified thrust clearance		0.040 to 0.300 mm (0.0016 to 0.0118 in.)
Thrust washer thickness		1.930 to 1.980 mm (0.0760 to 0.0780 in.)
Cylinder block main journal bore diameter (Reference)	Mark 0	59.000 to 59.002 mm (2.3228 to 2.3229 in.)
	Mark 1	59.002 to 59.004 mm (2.3229 to 2.3230 in.)
	Mark 2	59.004 to 59.006 mm (2.3230 to 2.3231 in.)
	Mark 3	59.006 to 59.009 mm (2.3231 to 2.3232 in.)
	Mark 4	59.009 to 59.011 mm (2.3232 to 2.3233 in.)
	Mark 5	59.011 to 59.013 mm (2.3233 to 2.3233 in.)
	Mark 6	59.013 to 59.016 mm (2.3233 to 2.3235 in.)
Main journal diameter		54.988 to 55.000 mm (2.1648 to 2.1654 in.)
Main journal diameter (Reference)	Mark 0	54.998 to 55.000 mm (2.1653 to 2.1654 in.)
	Mark 1	54.996 to 54.998 mm (2.1652 to 2.1653 in.)
	Mark 2	54.994 to 54.996 mm (2.1651 to 2.1652 in.)
	Mark 3	54.992 to 54.994 mm (2.1650 to 2.1651 in.)
	Mark 4	54.990 to 54.992 mm (2.1650 to 2.1650 in.)
	Mark 5	54.988 to 54.990 (2.1649 to 2.1650 in.)
Standard main bearing center wall thickness (Reference)	Mark 1	1.993 to 1.996 mm (0.0785 to 0.0786 in.)
	Mark 2	1.996 to 1.999 mm (0.0786 to 0.0787 in.)
	Mark 3	1.999 to 2.002 mm (0.0787 to 0.0788 in.)
	Mark 4	2.002 to 2.005 mm (0.0788 to 0.0789 in.)
Maximum circle runout		0.03 mm (0.0012 in.)
Specified main journal oil clearance		0.008 to 0.024 mm (0.00031 to 0.00094 in.)
Maximum main journal taper and out−of−round		0.003 mm (0.0001 in.)
Maximum crank pin taper and out−of−round		0.003 mm (0.0001 in.)
Crank pin diameter		47.990 to 48.000 mm (1.8894 to 1.8898 in.)
Crankshaft bearing cap set bolt		
Specified diameter		7.2 to 7.6 mm (0.283 to 0.299 in.)

1MZ−FE/3MZ−FE

V−Rebbed belt		
New drive belt tension	Cooler compressor to crankshaft	139 to 192 lbf
	Vane pump	154 to 176 lbf
Used drive belt tension	Cooler compressor to crankshaft	66 to 110 lbf
	Vane pump	77 to 110 lbf
Ignition timing	w/ Terminals TC and CG of DLC3 connected	8 to 12° BTDC @ idle
	w/ Terminals TC and CG of DLC3 disconnected	7 to 24° BTDC @ idle
Idle speed	1MZ−FE	550 − 650 rpm
	3MZ−FE	630 − 730 rpm
Compression	Compression pressure	1.47 MPa (15 kgf/cm^2, 213 psi)
	Minimum pressure	1.0 MPa (10.2 kgf/cm^2, 145 psi)
	Difference between each cylinder	100 kPa (1.0 kgf/cm^2, 15 psi)
Valve clearance (cold)	Intake	0.15 to 0.25 mm (0.006 to 0.010 in.)
	Exhaust	0.25 to 0.35 mm (0.010 to 0.014 in.)
Intake air surge tank		
Maximum warpage		0.10 mm (0.0039 in.)
Intake manifold		
Maximum warpage	Air intake surge tank side	0.15 mm (0.0059 in.)
	Cylinder head side	0.08 mm (0.0031 in.)
Exhaust manifold		
Maximum warpage		0.50 mm (0.0196 in.)
Camshaft		
Maximum circle runout		0.06 mm (0.0024 in.)
Specified cam lobe height	1MZ−FE Intake	42.780 to 43.032 mm (1.6842 to 1.6942 in.)
	Exhaust	42.610 to 42.864 mm (1.6776 to 1.6876 in.)
	3MZ−FE Intake	42.980 to 43.232 mm (1.6921 to 1.7020 in.)
	Exhaust	42.960 to 43.110 mm (1.6874 to 1.6972 in.)
Camshaft Journal diameter		26.959 to 26.975 mm (1.0614 to 1.0620 in.)
Specified gear backlash		0.020 to 0.300 mm (0.0008 to 0.0118 in.)
Specified journal thrust clearance		0.040 to 0.120 mm (0.0016 to 0.0047 in.)
Specified journal oil clearance		0.025 to 0.100 mm (0.0010 to 0.0039 in.)
Cylinder head set bolt		
Specified outside diameter at tension portion		8.75 to 9.05 mm (0.3445 to 0.3563 in.)
Cylinder head		
Maximum warpage	Cylinder block side	0.05 mm (0.0020 in.)
	Intake manifold side	0.10 mm (0.0039 in.)
	Exhaust manifold side	0.10 mm (0.0039 in.)
Intake valve		
Specified overall length		94.95 to 95.45 mm (3.7382 to 3.7579 in.)
Valve stem diameter		5.470 to 5.485 mm (0.2154 to 0.2159 in.)
Minimum margin thickness		0.5 to 1.0 mm (0.020 to 0.039 in.)
Exhaust valve		
Specified overall length		94.90 to 95.40 mm (3.7362 to 3.7559 in.)
Valve stem diameter		5.465 to 5.480 mm (0.2152 to 0.2157 in.)
Minimum margin thickness		0.5 to 1.0 mm (0.020 to 0.039 in.)
Inner compression spring		
Free length		45.50 mm (1.7913 in.)
Maximum deviation		2.0 mm (0.079 in.)
Installed tension at 33.8 mm (1.331 in.)		186 to 206 N (19.0 to 21.0 kgf, 41.9 to 46.3 lbf)
Valve guide bush		
Bush inside diameter		5.510 to 5.530 mm (0.2169 to 0.2177 in.)
Specified bush oil clearance	Intake	0.025 to 0.080 mm (0.0010 to 0.0031 in.)
	Exhaust	0.030 to 0.100 mm (0.0012 to 0.0039 in.)
Cylinder head valve guide bush bore diameter	STD	10.295 to 10.313 mm (0.4053 to 0.4060 in.)
	O/S 0.05	10.345 to 10.363 mm (0.4073 to 0.4080 in.)
Bush diameter	STD	10.333 to 10.344 mm (0.4068 to 0.4072 in.)
	O/S 0.05	10.383 to 10.394 mm (0.4088 to 0.4092 in.)

Valve lifter		
Lifter diameter		30.966 to 30.976 mm (1.2191 to 1.2195 in.)
Lifter bore diameter		31.009 to 31.025 mm (1.2208 to 1.2215 in.)
Specified oil clearance	Standard	0.033 to 0.070 mm (0.0013 to 0.0028 in.)
Connecting rod		
Specified thrust clearance		0.15 to 0.35 mm (0.0059 to 0.0138 in.)
Connecting rod thickness		20.80 to 20.85 mm (0.8189 to 0.8209 in.)
Specified connecting rod oil clearance		0.038 to 0.080 mm (0.0015 to 0.0031 in.)
Connecting rod bearing center wall thickness	Mark 1	1.484 to 1.487 mm (0.0584 to 0.0585 in.)
	Mark 2	1.487 to 1.490 mm (0.0585 to 0.0587 in.)
	Mark 3	1.490 to 1.493 mm (0.0587 to 0.0588 in.)
	Mark 4	1.493 to 1.496 mm (0.0588 to 0.0589 in.)
Crankshaft		
Crankshaft thrust clearance		0.04 to 0.30 mm (0.0016 to 0.0118 in.)
Thrust washer thickness		1.93 to 1.98 mm (0.0760 to 0.0780 in.)
Specified main journal oil clearance	No. 1 and No. 4 journals	0.014 to 0.050 mm (0.0006 to 0.0020 in.)
	No. 2 and No. 3 journals	0.026 to 0.060 mm (0.0010 to 0.0024 in.)
Cylinder block main journal bore diameter (Reference)	Mark 00	66.000 mm (2.5984 in.)
	Mark 01	66.001 mm (2.5985 in.)
	Mark 02	66.002 mm (2.5985 in.)
	Mark 03	66.003 mm (2.5985 in.)
	Mark 04	66.004 mm (2.5986 in.)
	Mark 05	66.005 mm (2.5986 in.)
	Mark 06	66.006 mm (2.5987 in.)
	Mark 07	66.007 mm (2.5987 in.)
	Mark 08	66.008 mm (2.5987 in.)
	Mark 09	66.009 mm (2.5988 in.)
	Mark 10	66.010 mm (2.5988 in.)
	Mark 11	66.011 mm (2.5989 in.)
	Mark 12	66.012 mm (2.5989 in.)
	Mark 13	66.013 mm (2.5989 in.)
	Mark 14	66.014 mm (2.5990 in.)
	Mark 15	66.015 mm (2.5990 in.)
	Mark 16	66.016 mm (2.5990 in.)
Main journal diameter		61.000 mm (4.1016 in.)
Main journal diameter (Reference)	Mark 00	60.999 mm (4.4015 in.)
	Mark 01	60.998 mm (4.4015 in.)
	Mark 02	60.997 mm (4.4015 in.)
	Mark 03	60.996 mm (4.4014 in.)
	Mark 04	60.995 mm (4.4014 in.)
	Mark 05	60.994 mm (4.4013 in.)
	Mark 06	60.993 mm (4.4012 in.)
	Mark 07	60.992 mm (4.4012 in.)
	Mark 08	60.991 mm (4.4012 in.)
	Mark 09	60.990 mm (4.4012 in.)
	Mark 10	60.989 mm (4.4011 in.)
	Mark 11	60.988 mm (4.4011 in.)
	Mark 12	2.486 to 2.489 mm (0.0979 to 0.0980 in.)
Standard main bearing center wall thickness (Reference)	Mark 1	2.489 to 2.492 mm (0.0980 to 0.0981 in.)
	Mark 2	2.492 to 2.495 mm (0.0981 to 0.0982 in.)
	Mark 3	2.495 to 2.498 mm (0.0982 to 0.0983 in.)
	Mark 4	2.498 to 2.501 mm (0.0983 to 0.0985 in.)
	Mark 5	2.501 to 2.504 mm (0.0985 to 0.0986 in.)
	Mark 6	2.504 to 2.507 mm (0.0986 to 0.0987 in.)
	Mark 7	0.06 mm (0.0024 in.)
Maximum circle runout		60.988 to 61.000 mm (2.4011 to 2.4016 in.)
Main journal taper and out−of−round		0.02 mm (0.0008 in.)
Crank pin diameter		52.992 to 53.000 mm (2.0863 to 2.0866 in.)
Maximum crank pin taper and out−of−round		0.02 mm (0.0008 in.)
Cylinder block		
Maximum warpage		0.05 mm (0.0020 in.)
Specified cylinder bore diameter	1MZ−FE	87.500 to 87.632 mm (3.4449 to 3.4501 in.)
	3MZ−FE	92.000 to 92.132 mm (3.6220 to 3.6272 in.)

Piston		
Piston diameter	1MZ−FE for AISIN made	87.106 to 87.416 mm (3.4412 to 3.4416 in.)
	1MZ−FE for MAHLE made	87.453 to 87.467 mm (3.4430 to 3.4436 in.)
	3MZ−FE	91.983 to 91.967 mm (3.6202 to 3.6207 in.)
Specified oil clearance	1MZ−FE for AISIN made	0.084 to 0.130 mm (0.0033 to 0.0051 in.)
	1MZ−FE for MAHLE made	0.033 to 0.130 mm (0.0013 to 0.0051 in.)
	3MZ−FE	0.033 to 0.130 mm (0.0013 to 0.0051 in.)
Connecting rod		
Maximum misalignment per 100 mm (3.94 in.)		0.05 mm (0.0020 in.) per 100 mm (3.94 in.)
Maximum rod twist per 100 mm (3.94 in.)		0.15 mm (0.0059 in.) per 100 mm (3.94 in.)
Bush inside diameter		22.005 to 22.014 mm (0.8663 to 0.8667 in.)
Piston pin		
Piston pin diameter		21.997 to 22.006 mm (0.8660 to 0.8664 in.)
Pecified oil clearance		0.005 to 0.050 mm (0.0002 to 0.0020 in.)
Piston ring		
Piston ring groove clearance	1MZ−FE No. 1	0.02 to 0.07 mm (0.0008 to 0.0028 in.)
	No. 2	0.02 to 0.06 mm (0.0008 to 0.0024 in.)
	Oil	0.04 to 0.12 mm (0.0016 to 0.0047 in.)
	3MZ−FE No. 1	0.03 to 0.08 mm (0.0012 to 0.0031 in.)
	No. 2	0.02 to 0.06 mm (0.0008 to 0.0024 in.)
	Oil	0.03 to 0.11 mm (0.0012 to 0.0043 in.)
Specified end gap	1MZ−FE No. 1	0.25 to 0.95 mm (0.0098 to 0.0374 in.)
	No. 2	0.35 to 1.05 mm (0.0138 to 0.0413 in.)
	Oil (Side rail)	0.15 to 1.00 mm (0.0059 to 0.0394 in.)
	3MZ−FE No. 1	0.30 to 0.95 mm (0.0118 to 0.0374 in.)
	No. 2	0.50 to 1.05 mm (0.0197 to 0.0413 in.)
	Oil	0.15 to 1.00 mm (0.0059 to 0.0394 in.)
Connecting rod bolt		
Specified diameter		7.0 to 7.3 mm (0.276 to 0.287 in.)
Crankshaft bearing cap set bolt		
Specified diameter		7.2 to 7.6 mm (0.283 to 0.299 in.)

030EU−04

TORQUE SPECIFICATION

2AZ−FE

Part Tightened		N·m	kgf·cm	ft·lbf
Engine mounting bracket No. 2 RH x Timing chain cover		52	531	38
Engine moving control rod w/ bracket x Engine mounting bracket No. 2 RH		64	653	47
Engine moving control rod w/ bracket x Fender apron RH		64	653	47
Engine mounting stay No. 2 RH x Cylinder head		64	653	47
Engine mounting stay No. 2 RH x Engine mounting bracket No. 2 RH		64	653	47
Drain plug (A/T)		49	500	36
Drain plug (M/T)		49	500	36
Engine hanger No. 1 x Cylinder head		38	387	28
Engine hanger No. 2 x Cylinder head		38	387	28
ECT sensor x Cylinder head		20	204	15
Knock sensor x Cylinder block		39	398	29
Engine oil pressure switch assy x Cylinder head		15	153	11
Water by−pass pipe No. 1 x Cylinder block		9.0	92	80 in.·lbf
Transverse engine engine mounting bracket x Cylinder block		54	551	40
Drive shaft bearing bracket x Cylinder block		64	653	47
V−ribbed belt tensioner assy x Timing chain cover		59.5	607	44
Ignition coil assy x Cylinder head		9.0	92	80 in.·lbf
Water inlet x Cylinder block		9.0	92	80 in.·lbf
Exhaust manifold converter x Cylinder head		37	378	27
Exhaust manifold stay x Exhaust manifold converter		44	449	32
Manifold converter insulator No. 1 x Exhaust manifold converter		12	122	9
Oil level gage guide x Water by−pass pipe No. 1		9.0	92	80 in.·lbf
Intake manifold x Cylinder head		30	306	22
Drive plate & ring gear (A/T) x Crankshaft		98	1,000	72
Flywheel sub−assy (M/T) x Crankshaft		130	1,330	96
Starter assy x Automatic transaxle assy		39	398	29
Starter assy x Manual transaxle assy		39	398	29
Engine mounting insulator LH x Automatic transaxle assy		95	969	70
Engine mounting insulator LH x Manual transaxle assy		143	1,459	105
Engine mounting insulator RH x Engine mounting bracket RH		95	969	70
Engine mounting insulator FR x Engine mounting bracket FR		87	888	64
Engine mounting bracket rear No. 2 x Engine lateral control rod (M/T)		89	910	66
Vane pump assy x Timing chain cover		43	439	32
Frame side plate x Front frame assy	Bolt A	85	867	63
Frame side plate x Body	Bolt B	32	326	24
Front suspension member brace rear x Front frame assy	Bolt C	85	867	63
Front suspension member brace rear x Body	Bolt D	32	326	24
Steering intermediate shaft		35	357	26
Drive plate & ring gear x Torque converter		41	418	30
Front suspension arm sub−assy lower No. 1 x Lower ball joint		75	764	55
Tie rod assy x Steering knuckle		49	500	36
Speed sensor front LH (w/ ABS) x Steering knuckle		8.0	82	71 in.·lbf
Speed sensor front RH (w/ ABS) x Steering knuckle		8.0	82	71 in.·lbf
Front axle hub LH nut x Front drive shaft		294	3,000	217
Front stabilizer link assy x Front suspension		74	755	55
Air cleaner assy x Body		5.0	51	44 in.·lbf
Balanceshaft housing x Stiffening crankcase assy	1st 2nd	22 Turn 90●	220 Turn 90●	16 Turn 90●
Stiffening crankcase assy x Cylinder block		33	332	24

Part Tightened		N·m	kgf·cm	ft·lbf
w/ head taper screw plug No. 1 x Cylinder block		26	265	19
Oil control valve filter x Cylinder block		30	306	22
Cylinder block water drain cock x Stiffening crankcase assy		25	255	18
Cylinder head x Cylinder block	1st	79	806	58
	2nd	Turn 90●	Turn 90●	Turn 90●
Camshaft timing gear assy x Camshaft		54	551	40
Camshaft timing sprocket x Camshaft		54	551	40
Camshaft bearing cap No. 1 x Cylinder head		30	301	22
Camshaft bearing cap No. 2 x Cylinder head		30	301	22
Camshaft bearing cap No. 3 x Cylinder head		9.0	92	80 in.·lbf
Oil pump assy x Stiffening crankcase assy		19	194	14
Chain tensioner plate x Stiffening crankcase assy		12	122	9
Oil pump drive sprocket x Oil pump		30	301	22
Chain vibration damper No. 1 x Cylinder head		9.0	92	80 in.·lbf
Chain vibration damper No. 1 x Cylinder block		9.0	92	80 in.·lbf
Chain tensioner slipper x Cylinder block		19	194	14
Timing chain guide x Crankshaft bearing cap No. 1		9.0	92	80 in.·lbf
Timing chain cover (See page 14−75)	Bolt A	9.0	92	80 in.·lbf
	Bolt B	21	214	15
	Bolt C	43	438	32
	Nut	9.0	92	80 in.·lbf
Oil pan x Stiffening crankcase assy		9.0	92	80 in.·lbf
Oil pan drain plug x Oil pan		25	250	18
Water pump assy x Cylinder block		9.0	92	80 in.·lbf
Water pump pulley x Water pump assy		26	265	19
Crankshaft position sensor x Timing chain cover		9.0	92	80 in.·lbf
Crankshaft pulley x Crankshaft		170	1,733	125
Chain tensioner assy No. 1 x Timing chain cover		9.0	92	80 in.·lbf
Camshaft position sensor x Cylinder head		9.0	92	80 in.·lbf
Cylinder head cover x Cylinder head		11	110	8
Oil filter union x Stiffening crankcase assy		30	306	22
Spark plug x Cylinder head		19	194	14
Ventilation valve x Cylinder head cover		19	194	14
Front suspension brace x Body		80	816	59
Stud bolt (See page 14−108)	Bolt A	5	51	44 in.·lbf
	Bolt B	5	51	44 in.·lbf
	Bolt C	10	97	84 in.·lbf
	Bolt D	10	97	84 in.·lbf
Stud bolt (See page 14−120)	Stud bolt A	5.0	51	44 in.·lbf
	Stud bolt B	10	97	84 in.·lbf
	Stud bolt C	5.0	51	44 in.·lbf
Crankshaft bearing cap x Cylinder block	1st	20	204	15
	2nd	40	408	29
Connecting rod cap x Connecting rod	1st	25	250	18
	2nd	Turn 90●	Turn 90●	Turn 90●

1MZ−FE/3MZ−FE

Part Tightened		N·m	kgf·cm	ft·lbf
Engine hanger No. 2 x Cylinder head		20	204	15
Knock sensor x Cylinder block	1MZ−FE	39	398	39
	3MZ−FE	20	204	15
Oil pressure switch assy x Cylinder block		15	152	11
Compressor mounting bracket No.1 x Cylinder block		25	255	18
Generator bracket No. 1 x Cylinder block		58	591	43
Pump bracket x Cylinder head		32	326	24
Drive shaft bearing bracket x Cylinder block		64	653	47
Exhaust manifold converter sub−assy No. 2 x Cylinder head		49	500	36
Exhaust manifold heat insulator No. 2 x Cylinder head		8.5	87	75 in.·lbf
Exhaust manifold converter sub−assy RH x Cylinder head		49	500	36
Intake manifold x Cylinder head		15	153	11
Ignition coil assy x Cylinder head cover		8.0	82	71 in.·lbf
Intake air surge tank x Intake manifold		28	286	21
Surge tank stay bolt		20	204	15
Engine hanger No. 2 x Cylinder head		39	398	29
Engine hanger No. 1 x Intake air surge tank		39	398	29
Manifold stay No. 2 x Exhaust manifold converter sub−assy		49	500	36
Manifold stay No. 2 x Automatic transaxle assy		49	500	36
Engine mounting insulator RH x Engine mounting bracket		95	969	70
Engine mounting insulator LH x Automatic transaxle assy		95	969	70
Engine mounting insulator FR x Automatic transaxle assy		87	887	64
Vane pump assy x Pump bracket		43	439	32
Vane pump assy x Engine mounting bracket		43	439	32
Frame side rail plate sub−assembly x Front frame assy (See page 14−164)	Bolt A	85	867	63
	Bolt B	32	326	24
	Nut	32	326	24
Front suspension member brace rear x Front frame assy (See page 14−164)	Bolt C	85	867	63
	Bolt D	32	326	24
	Nut	32	326	24
Compressor and magnetic clutch x Compressor mounting bracket No.1 (See page 14−164)	Bolt	25	250	18
	Nut	26	260	19
Generator belt adjusting bar x Cylinder block (See page 14−164)	Nut A	43	438	32
	Bolt B	18	184	13
	Bolt C	8.0	82	71 in.·lbf
Generator bracket No. 2 x Transverse engine engine mounting bracket		28	286	21
Intermediate shaft sub−assy		35	357	26
Drive plate & ring gear x Torque converter		41	418	30
Flywheel housing under cover x Automatic transaxle assy		7.8	80	69 in.·lbf
Front suspension arm x Lower ball joint		75	764	55
Tie rod end x Steering knuckle		49	500	36
Front axle hub nut x Front drive shaft		294	2,998	217
Front stabilizer link assy x Front suspension		74	755	55
V−bank cover x Cylinder head cover		7.9	81	70 in.·lbf
Engine mounting stay No. 2 RH x Engine engine mounting bracket		64	653	47
Engine moving control rod (See page 14−164)	Bolt A	64	653	47
	Bolt B	23	235	17
Camshaft sub−gear x Main gear		5.4	55	48 in.·lbf

Part Tightened		N·m	kgf·cm	ft·lbf
Engine rear oil seal retainer x Cylinder block		8.0	82	71 in.·lbf
Oil pump assy x Cylinder block (See page 14−186)	10 mm head	8.0	82	71 in.·lbf
	12 mm head	20	204	15
	14 mm head	43	439	32
Crank position sensor x Oil pump assy		8.0	82	71 in.·lbf
Oil pan baffle plate x Oil pan sub−assy		8.0	82	71 in.·lbf
Oil pan sub−assy x Cylinder block (See page 14−186)	10 mm head	8.0	82	71 in.·lbf
	12 mm head	20	204	15
Oil strainer sub−assy x Oil pan sub−assy		8.0	82	71 in.·lbf
Oil pan sub−assy No. 2 x Oil pan sub−assy		8.0	82	71 in.·lbf
Oil pan drain plug x Oil pan sub−assy No. 2		45	459	33
Water inlet housing x Cylinder block		8.0	82	71 in.·lbf
Cylinder head x Cylinder block	12 pointed head 1st	54	551	40
	2nd	Turn 90●	Turn 90●	Turn 90●
	Recessed head	19	189	14
Camshaft bearing cap x Cylinder head		16	163	12
Timing belt plate x Oil pump assy		8.0	82	71 in.·lbf
Water pump assy x Cylinder block		8.0	82	71 in.·lbf
Oil level gage guide x Cylinder block		8.0	82	71 in.·lbf
Oil filter union x Cylinder block		30	306	22
Timing belt idler bracket x Cylinder block		28	286	21
Timing belt No. 3 cover x Cylinder head		8.5	87	76 in.·lbf
Camshaft timing pulley x Camshaft		125	1,275	92
Timing belt idler sub−assy No. 2 x Timing belt idler bracket		43	438	32
Timing belt idler sub−assy No. 1 x Cylinder block		34	347	25
Chain tensioner assy No. 1 x Oil pump assy		27	280	20
Transverse engine engine mounting bracket x Cylinder block		28	286	21
Timing belt No. 2 cover x Timing belt No. 3 cover		8.5	87	76 in.·lbf
Timing belt No. 1 cover x OIl pump assy		8.5	87	76 in.·lbf
Crankshaft pulley x Crankshaft		215	2,192	159
Camshaft position sensor x Cylinder head		8.0	82	71 in.·lbf
Cylinder head cover x Cylinder head		8.0	82	71 in.·lbf
Spark plug x Cylinder head		18	184	13
Vane pump assy x Adjusting strut		43	439	32
Generator x Generator bracket		58	591	43
Generator x Adjusting bar		18	184	13
Front suspension brace upper x Body		80	816	59
Water outlet x Cylinder head		15	153	11
Exhaust manifold heat insulator No. 2 x Exhaust manifold LH		8.5	87	55 in.·lbf
Exhaust pipe support bracket No. 1 x Automatic transaxle assy		21	214	15
Drive plate & ring gear sub−assy x Crankshaft		83	846	61
w/ head straight screw plug No. 1 x Cylinder head		44	449	32
w/ head straight screw plug No. 2 x Cylinder head		44	449	32
Main bearing cap x Cylinder block	12 pointed head 1st	22	224	16
	2nd	Turn 90●	Turn 90●	Turn 90●
	6 pointed head	27	275	20
Connecting rod cap x Connecting rod	1st	25	250	18
	2nd	Turn 90●	Turn 90●	Turn 90●
Cylinder block w/ head straight screw No. 1 plug x Cylinder block		30	306	22
Cylinder block w/ head straight screw No. 2 plug x Cylinder block		50	510	37
Cylinder block w/head straight screw No. 3 plug x Cylinder block		30	306	22

Part Tightened	N·m	kgf·cm	ft·lbf
Water seal plate x Cylinder block	18	184	13
Cylinder block water drain cock sub−assy x Cylinder block	39	398	29

EXHAUST

030EV−03

TORQUE SPECIFICATION

2AZ−FE

Part Tightened	N·m	kgf·cm	ft·lbf
Exhaust pipe damper (A/T) x Exhaust pipe assy center	19	194	14
Exhaust pipe assy center x Exhaust pipe assy tail	56	571	41
Floor panel brace rear x Body	19.5	199	14
Exhaust pipe assy front x Exhaust pipe assy center	56	571	41
Exhaust pipe assy front x Exhaust manifold converter sub assy	62	633	46
Exhaust pipe No. 1 support bracket x Exhaust pipe assy front	33	337	24
Exhaust pipe No. 1 support bracket x Exhaust pipe assy front	33	337	24
Heated oxygen sensor x Exhaust pipe assy front	44	449	32

1MZ−FE/3MZ−FE

Part Tightened	N·m	kgf·cm	ft·lbf
Exhaust pipe assy center x Exhaust pipe assy tail	56	571	41
Exhaust pipe assy front x Exhaust manifold RH	62	633	47
Exhaust pipe assy front x Exhaust manifold converter No. 2	62	633	47
Exhaust pipe assy front x Exhaust pipe assy center	56	571	41
Exhaust pipe No. 1 support bracket x Body	33	337	24
Floor panel brace rear x Body	20	204	15
Exhaust pipe No. 1 support bracket x Exhaust pipe support bracket No. 1	33	337	24
Heated oxygen sensor x Exhaust pipe assy front	44	449	32

COOLING

030EW−03

SERVICE DATA

2AZ−FE

Thermostat		
Valve opening temperature		80 to 84°C (176 to 183°F)
Valve lift	at 95°C (203°F)	10 mm (0.394 in.) or more
Radiator cap sub−assy		
Specified opening pressure		78 to 122 kPa (0.80 to 1.25 kgf/cm^2, 11.2 to 17.6 psi)
Cooling fan		
Standard amperage	at 20°C (68°F)	4.9 to 8.5 A

1MZ−FE/3MZ−FE

Thermostat		
Valve opening temperature		80 to 84°C (176 to 183°F)
Valve lift	at 95°C (203°F)	10 mm (0.394 in.) or more
Radiator cap sub−assy		
Specified opening pressure		69.0 to 112.8 kPa (0.70 to 1.15 kgf/cm^2, 10.0 to 16.4 psi)
Cooling fan		
Standard amperage	at 20°C (68°F)	8.0 to 12.0 A

030EX−04

TORQUE SPECIFICATION

2AZ−FE

Part Tightened	N·m	kgf·cm	ft·lbf
Cylinder block drain cock plug x Drain cock	13	130	10
Water pump x Cylinder block	9.0	92	80 in.·lbf
Water pump pulley x Water pump	26	265	19
Water inlet x Cylinder block	9.0	92	80 in.·lbf
Fan assy w/ motor x Radiator assy	5.0	51	44 in.·lbf
Radiator support upper x Body	14	142	10
Air cleaner inlet x Body	5.0	51	44 in.·lbf
Oil cooler assy x Radiator tank lower	8.3	85	73 in.·lbf
Oil coler pipe x Oil cooler assy	14.7	150	11

1MZ−FE/3MZ−FE

Part Tightened	N·m	kgf·cm	ft·lbf
Cylinder block drain cock plug x Drain cock	13	130	10
Water pump assy x Cylinder block	8	82	71 in.·lbf
Timing belt Idler sub−assy No.2 x Cylinder block	43	438	32
Engine mounting bracket RH x Cylinder block	28	286	21
Generator bracket No. 2 x Cylinder block	28	286	21
Water inlet x Cylinder block	8	82	71 in.·lbf
Water inlet pipe x Water inlet	20	204	15
Fan assy w/ motor x Radiator assy	5.0	51	44 in.·lbf
Radiator support upper x body	14	142	10
Air cleaner inlet x Body	5.0	51	44 in.·lbf
Oil cooler assy x Radiator tank lower	8.3	85	74 in.·lbf
Oil coler pipe x Oil cooler assy	14.7	150	11

LUBRICATION

030EY−03

SERVICE DATA

2AZ−FE

Oil pressure	at idle speed	29 kPa (0.3 kgf·cm^2, 4.3 psi) or more
	at 3,000 rpm	245 to 539 kPa (2.5 to 5.5 kgf·cm^2, 36 to 78 psi) or more
Oil pump		
Specified side clearance		0.030 to 0.160 mm (0.0012 to 0.0063 in.)
Specified tip clearance		0.080 to 0.350 mm (0.0031 to 0.0138 in.)
Specified body clearance		0.100 to 0.325 mm (0.0039 to 0.0128 in.)

1MZ−FE/3MZ−FE

Oil pressure	at idle speed	29 kPa (0.3 kgf·cm^2, 4.3 psi) or more
	at 3,000 rpm	245 to 539 kPa (2.5 to 5.5 kgf·cm^2, 36 to 78 psi)
Oil pump		
Specified side clearance		0.060 to 0.300 mm (0.0024 to 0.0118 in.)
Specified tip clearance		0.250 to 0.500 mm (0.0098 to 0.0128 in.)
Specified body clearance		0.030 to 0.150 mm (0.0012 to 0.0059 in.)

030EZ−04

TORQUE SPECIFICATION

2AZ−FE

Part Tightened		N·m	kgf·cm	ft·lbf
Oil pressure switch x Cylinder head		15	152	11
Oil drain plug x Oil pan sub−assy		25	255	18
Oil pump assy x Cylinder block		19	194	14
Chain tensioner plate x Stiffening crankcase assy		12	122	9
Oil pump drive sprocket x Oil pump		30	301	22
Chain vibration damper No. 1 x Cylinder block		9.0	92	80 in.·lbf
Chain tensioner slipper x Cylinder block		19	194	14
Timing chain cover (see page 17−8)	Bolt A Bolt B Bolt C Nut	9.0 21 43 9.0	92 214 438 92	80 in.·lbf 15 32 80 in.·lbf
V−ribbed belt tensioner assy x Timing chain cover		59.5	607	44
Engine mounting bracket RH x Cylinder block		54	551	40
Engine mounting insulator RH (see page 17−8)	Bolt A Bolt B	95 87	969 888	70 64
Steering gear return hose clamp		8.0	80	69 in.·lbf
Engine mounting insulator FR x Engine mounting bracket FR		87	888	64
Engine lateral control rod x Bracket		89	910	66
Oil pan sub−assy x Stiffening crankcase assy		9.0	92	80 in.·lbf
Crankshaft position sensor x Timing chain cover		9.0	92	80 in.·lbf
Crankshaft pulley x Crankshaft		170	1,733	125
Ignition coil assy x Cylinder head		9.0	92	80 in.·lbf
Engine mounting bracket No. 2 RH x Timing chain cover		52	531	38
Engine mounting stay No. 2 RH x Cylinder head		64	653	47
Engine moving control rod w/ bracket x Fender apron RH		64	653	47
Oil pump cover x Oil pump		8.8	90	78 in.·lbf
Oil pump strainer x Oil pump		8.8	90	78 in.·lbf

1MZ−FE/3MZ−FE

Part Tightened		N·m	kgf·cm	ft·lbf
Oil pressure switch x Cylinder block		15	152	11
Oil drain plug x Oil pump sub−assy No. 2		25	255	18
Oil pump assy x Cylinder block (see page 17−32)	Bolt A Bolt B Bolt C	8 20 43	82 199 439	71 in.·lbf 14 32
Crankshaft position sensor x Oil pump assy		8	82	71 in.·lbf
Oil pan sub−assy x Cylinder block	10 mm head 12 mm head 14 mm head	8.0 20 37	82 203 379	71 in.·lbf 15 27
Oil strainer sub−assy x Main bearing cap		8	82	71 in.·lbf
Oil pan sub−assy No. 2 x Oil pan sub−assy No. 1		8	82	71 in.·lbf
Engine engine mounting bracket RH (See page 17−32)	Bolt A Nut B Bolt C	54 54 43	550 550 439	40 40 32
Engine mounting insulator RH (see page 17−32)	Nut A Nut B	95 87	969 887	70 64
Engine mounting insulator FR (see page 17−32)	Bolt A Nut B	87 52	887 531	64 38
Oil level gage guide x Cylinder block		8	82	71 in.·lbf
Compressor mounting bracket No. 1 x Cylinder block		25	250	18
Timing belt idler sub−assy No. 1 x Cylinder block		34	347	25

Part Tightened	N·m	kgf·cm	ft·lbf
Compressor and magnetic clutch x Compressor mounting bracket	25	250	18
Generator bracket No. 2 x Transverse engine engine mounting bracket	28	286	21
Front suspension brace upper center x Body	80	816	59
Oil pump cover x Oil pump	10	105	8
Oil pump relief valve x Oil pump	49	500	36

IGNITION

030F0−03

SERVICE DATA

2AZ−FE

Spark plug		
Recommended spark plug	DENSO	SK20R11
	NGK	IFR6A11
Electrode gap	Standard	1.0 − 1.1mm (0.039 − 0.043 in.)
	Maximum	1.3 mm (0.051 in.)
Camshaft position sensor		
Resistance	at cold	835 − 1,400Ω
	at hot	1,060 − 1,645Ω
Crank position sensor		
Resistance	at cold	985 − 1,600Ω
	at hot	1,265 − 1,890Ω

1MZ−FE/3MZ−FE

Spark plug		
Recommended spark plug	DENSO	SK20R11
	NGK	IFR6A11
Electrode gap	Standard	1.0−1.1mm (0.039−0.043 in.)
	Maximum	1.3mm (0.051 in.)
Camshaft position sensor		
Resistance	at cold	835−1400Ω
	at hot	1060−1645Ω
Crank position sensor		
Resistance	at cold	1630−2740Ω
	at hot	2065−3225Ω

030F1−03

TORQUE SPECIFICATION

2AZ−FE

Part Tightened	N·m	kgf·cm	ft·lbf
Spark plug x Cylinder head cover	19	194	14
Ignition coil x Cylinder head cover	9.0	92	80 in.·lbf

1MZ−FE/3MZ−FE

Part Tightened	N·m	kgf·cm	ft·lbf
Spark plug x Cylinder head cover	25	255	18.5
Ignition coil x Cylinder head cover	8.0	82	71 in.·lbf

STARTING & CHARGING

030F2−03

SERVICE DATA

2AZ−FE:

Starter assy		
Specified current		90 A or less at 11.5 V
Starter relay		
Specified condition	3 − 5	10 kΩ or higher
	3 − 5	Below 1 Ω (when battery voltage is applied to terminals 1 and 2)
Starter armature assy		
Depth	Standard	3.1 mm (0.122 in.)
	Maximum	3.8 mm (0.150 in.)
Starter commutator end frame assy		
Brush length	Standard	9.0 mm (0.354 in.)
	Minimum	4.0 mm (0.158 in.)
Magnetic switch resistance	Terminal 50 − C	Below 1 Ω
	Terminal 50 − Switch body	Below 2 Ω
Starter armature resistance	Segments	Below 1 Ω
	Commutator − Coil core	10 kΩ or higher
Voltage regulator	Regulating voltage	13.2 to 14.8 V
	Standard amperage	10 A or less
Generator brush holder assy		
Brush length	Standard	10.5 mm (0.413 in.)
	Minimum	4.5 mm (0.177 in.)
Generator rotor assy		
Open circuit	Resistance	2.3 to 2.7 Ω at 20●C (68●F)
Slip ring diameter	Standard	14.2 to 14.4 mm (0.559 to 0.567 in.)
	Minimum	14.0 mm (0.551 in.)

1MZ−FE/3MZ−FE:

Starter assy		
Specified current		90 A or less at 11.5 V
Starter relay		
Specified condition	3 − 5	10 kΩ or higher
	3 − 5	Below 1 Ω (when battery voltage is applied to terminals 1 and 2)
Starter armature assy		
Depth	Standard	3.1 mm (0.122 in.)
	Maximum	3.8 mm (0.150 in.)
Starter commutator end frame assy		
Brush length	Standard	9.0 mm (0.354 in.)
	Minimum	4.0 mm (0.158 in.)
Magnetic switch resistance	Terminal 50 − C	Below 1 Ω
	Terminal 50 − Switch body	Below 2 Ω
Starter armature resistance	Segments	Below 1 Ω
	Commutator − Coil core	10 kΩ or higher
Voltage regulator	Regulating voltage	13.2 to 14.8 V
	Standard amperage	10 A or less
Generator brush holder assy		
Brush length	Standard	10.5 mm (0.413 in.)
	Minimum	4.5 mm (0.177 in.)
Generator rotor assy		
Open circuit	Resistance	2.3 to 2.7 Ω at 20●C (68●F)
Slip ring diameter	Standard	14.2 to 14.4 mm (0.559 to 0.567 in.)
	Minimum	14.0 mm (0.551 in.)

030F3−03

TORQUE SPECIFICATION

2AZ−FE:

Part Tightened		N·m	kgf·cm	ft·lbf
Starter x Transaxle housing		39	398	29
Starter wire x Starter assy		13	130	9
Air cleaner inlet x Body		7.0	71	62 in.·lbf
Air cleaner bracket x Body		12	122	9
Air cleaner case sub−assy x Air cleaner bracket		5.0	51	44 in.·lbf
Air cleaner case sub−assy x Body		5.0	51	44 in.·lbf
Air cleaner cap sub−assy x Air cleaner case sub−assy		5.0	51	44 in.·lbf
Battery clamp sub−assy x Body		5.5	56	49 in.·lbf
Battery clamp sub−assy x Battery clamp bolt		5.5	56	49 in.·lbf
Terminal x Battery		3.5	36	31 in.·lbf
Commutator end frame assy x Starter drive housing assy		6.0	61	53 in.·lbf
Magnetic switch assy x Starter drive housing assy		7.5	76	66 in.·lbf
Lead wire x Terminal C		10	102	7
Generator assy x Engine	M8	21	214	15
	M10	52	530	38
Wiring harness clamp		9	92	80 in.·lbf
Generator wire x Generator assy		9.8	100	7
Retainer plate x Drive end frame assy generator		2.3	23	20 in.·lbf
Generator rectifier end frame x Drive end frame assy generator		5.8	59	51 in.·lbf
Generator brush holder assy x Generator rectifier end frame		1.8	18	16 in.·lbf
Generator rear end cover x Generator rectifier end frame		4.6	47	41 in.·lbf
Generator pulley x Generator rotor assy		110	1,122	81

1MZ−FE/3MZ−FE:

Part Tightened	N·m	kgf·cm	ft·lbf
Starter assy x Transaxle housing	37	380	26
Starter wire x Starter assy	9.8	100	7
Air cleaner inlet No. 1 x Body	7.0	71	62 in.·lbf
Air cleaner bracket x Body	12	122	9
Air cleaner case sub−assy x Air cleaner bracket	5.0	51	44 in.·lbf
Air cleaner case sub−assy x Body	5.0	51	44 in.·lbf
Air cleaner cap sub−assy x Air cleaner case sub−assy	5.0	51	44 in.·lbf
Air cleaner inlet No. 2 x Body	7.0	71	62 in.·lbf
Battery clamp sub−assy x Body	5.5	56	49 in.·lbf
Battery clamp sub−assy x Battery clamp bolt	5.5	56	49 in.·lbf
Terminal x Battery	3.5	36	31 in.·lbf
Commutator end frame assy x Starter drive housing assy	6.0	61	53 in.·lbf
Magnetic switch assy x Starter drive housing assy	7.5	76	66 in.·lbf
Lead wire x Terminal C	10	102	7
Generator assy x Generator bracket No. 1	58	592	43
Generator assy x Generator belt adjusting bar	18	184	13
Generator wire x Generator assy	9.8	100	7
Retainer plate x Drive end frame assy generator	2.3	23	20 in.·lbf
Generator rectifier end frame x Drive end frame assy generator	5.8	59	51 in.·lbf
Generator brush holder assy x Generator rectifier end frame	1.8	18	16 in.·lbf
Generator rear end cover x Generator rectifier end frame	4.6	47	41 in.·lbf
Generator pulley x Generator rotor assy	111	1,127	82

FRONT SUSPENSION

SERVICE DATA

032CP−01

Front wheel alignment	Vehicle height		
	1MZ−FE COMFORT	Front: A − B	120 mm (4.72 in.)
		Rear: D − C	46 mm (1.81 in.)
	1MZ−FE PREMIUM (USA, Canada)	Front: A − B	119 mm (4.69 in.)
		Rear: D − C	47 mm (1.85 in.)
	1MZ−FE PREMIUM (Mexico)	Front: A − B	106 mm (4.17 in.)
			*1 101 mm (3.98 in.)
		Rear: D − C	33 mm (1.30 in.)
			*1 25 mm (0.98 in.)
	3MZ−FE SPORT	Front: A − B	120 mm (4.72 in.)
		Rear: D − C	48 mm (1.89 in.)
	2AZ−FE COMFORT (USA, Canada)	Front: A − B	119 mm (4.69 in.)
		Rear: D − C	45 mm (1.77 in.)
	2AZ−FE COMFORT (Mexico)	Front: A − B	106 mm (4.17 in.)
			*1 101 mm (3.98 in)
		Rear: D − C	33 mm (1.30 in.)
			*1 25 mm (0.98 in.)
	2AZ−FE PREMIUM	Front: A − B	120 mm (4.72 in.)
		Rear: D − C	45 mm (1.77 in.)
	2AZ−FE SPORT	Front: A − B	120 mm (4.72 in.)
		Rear: D − C	48 mm (1.89 in.)
	Toe−in (total)		0●± 12’ (0●± 0.2●0 ± 2 mm, 0 ± 0.08 in.)
		Rack end length difference	1.5 mm (0.059 in.) or less
	Wheel angle		
	15 inch (USA, Canada)	Inside wheel	39˚04’ ± 2˚ (39.07˚ ± 2˚)
		Outside wheel: Reference	33˚44’ (33.73˚)
	15 inch (Mexico)	Inside wheel	39˚30’ ± 2˚ (39.50˚ ± 2˚)
		Outside wheel: Reference	34˚02’ (34.03˚)
	16 inch (USA, Canada)	Inside wheel	36˚39’ ± 2˚ (36.65˚ ± 2˚)
		Outside wheel: Reference	32˚11’ (32.18˚)
	16 inch (Mexico)	Inside wheel	37˚00’ ± 2˚ (37.00˚ ± 2˚)
		Outside wheel: Reference	32˚28’ (32.47˚)
	Camber	USA, Canada:	−0˚43’ ± 45’ (−0.72˚ ± 0.75˚)
		Mexico:	−0˚33’ ± 45’ (−0.55˚ ± 0.75˚)
		Right−left error	45’ (0.75˚) or less
	Caster		
	3MZ−FE		2˚39’ ± 45’ (2.65˚ ± 0.75˚)
	1MZ−FE Except SPORT (USA, Canada)		2˚37’ ± 45’ (2.62˚ ± 0.75˚)
	1MZ−FE Except SPORT (Mexico)		2˚33’ ± 45’ (2.55˚ ± 0.75˚)
	2AZ−FE SPORT		2˚43’ ± 45’ (2.72˚ ± 0.75˚)
	2AZ−FE Except SPORT (USA, Canada)		2˚39’ ± 45’ (2.65˚ ± 0.75˚)
	2AZ−FE Except SPORT (Mexico)		2˚36’ ± 45’ (2.60˚ ± 0.75˚)
		Right−left error	45’ (0.75˚) or less
	Steering axis inclination	USA, Canada:	11˚27’ ± 45’ (11.45˚ ± 0.75˚)
		Mexico:	11˚05’ ± 45’ (11.08˚ ± 0.75˚)
		Right−left error	45’ (0.75˚) or less
Front suspension	Lower ball joint turning torque		0.98 − 3.43 N·m (10 − 35 kgf·cm, 8.7 − 30 in.·lbf)
	Stabilizer bar link ball joint turning torque		0.05 − 1.96 N·m (0.5 − 20 kgf·cm, 0.4 − 17.4 in.·lbf)

A: Ground clearance of front wheel center

B: Ground clearance of lower suspension arm No. 2 set bolt center

C: Ground clearance of strut rod set bolt center

D: Ground clearance of rear wheel center

***1: HI UP**

032CQ−01

TORQUE SPECIFICATION

Part Tightened		N·m	kgf·cm	ft·lbf
Tie rod end lock nut		74	755	55
Steering knuckle x Shock absorber		210	2,141	155
Hub nut		103	1,050	76
Suspension support x Body	TMC made:	80	816	59
Suspension support x Body	TMMK made:	85	867	63
Suspension support x Piston rod		49	500	36
Speed sensor wire harness bracket set bolt (w/ ABS)		18.8	192	14
Flexible hose x Shock absorber (w/o ABS)		18.8	192	14
Lower suspension arm set bolt	Front side:	200	2,039	148
	Rear side:	206	2,101	152
Transverse engine engine mounting insulator set nut		87	887	64
Transverse engine engine mounting insulator x Bracket (MT)		64	653	47
Stabilizer bar bracket x Suspension member		19	194	14
Stabilizer bar link set nut		74	755	55
Lower ball joint assy x Front suspension arm no.1		75	765	55

REAR SUSPENSION

030FH−02

SERVICE DATA

Rear wheel alignment	Toe−in (total)	0●22’ ± 11’ (0.3●± 0.2●, 4 ± 2 mm (0.16 ± 0.08 in.)
	No.2 lower suspension arm length difference	1.5 mm (0.06 in.) or less
	Camber USA, Canada:	−1˚16’ ± 45’ (−1.27˚ ± 0.75˚)
	Mexico:	−1˚09’ ± 45’ (−1.15˚ ± 0.75˚)
	Right−left error	45’ (0.75˚) or less
Rear suspension	Stabilizer bar link ball joint turning torque	0.05 − 1.0 N·m (0.5 − 10 kgf·cm, 0.4 − 8.7 in.·lbf)

030FG−02

TORQUE SPECIFICATION

Part Tightened		N·m	kgf·cm	ft·lbf
Shock absorber x Body		39	400	29
Shock absorber x Rear axle carrier		255	2,600	188
Flexible hose x Shock absorber		19	194	14
ABS speed sensor wire harness x Shock absorber		5.5	56	49 in·lbf
Piston rod set nut		49	500	36
Shock absorber x Stabilizer bar link		39	400	29
Rear suspension member x Rear suspensio arm assy No. 1 LH		100	1,020	74
Rear suspension member x Body	A, B	55	561	41
	C	38	387	28
Rear suspension arm assy No. 1 x Rear axle carrier		100	1,020	74
Rear suspension arm assy No. 2 x Rear axle carrier		100	1,020	74
Stabilizer bar bracket		19	195	14
Stabilizer bar x Stabilizer bar link		39	400	29
Strut rod x Body		113	1,150	83
Strut rod x Rear axle carrier		113	1,152	83
Parking brake cable x Body		5.4	55	48 in.·lbf
Hub nut		103	1,050	76

TIRE & WHEEL

SERVICE DATA

032CR−01

Cold tire inflation pressure	Tire size: P205/65R15 92T Tire size: P205/65R15 92H Tire size: 205/65R15 94V Tire size: P215/60R16 94V	Front, Rear Front, Rear Front, Rear Front, Rear	200 kPa (2.0 kgf/cm^2, 29 psi)
	Tire size: P215/55R17 93V	Front, Rear	210 kPa (2.1 kgf/cm^2, 30 psi)

Tire runout	1.0 mm (0.039 in.) or less
Imbalance after adjustment	8.0 g (0.018 lb) or less

DRIVE SHAFT / PROPELLER SHAFT / AXLE

030EJ−02

SERVICE DATA

Front axle hub bearing	Backlash	Maximum: 0.05 mm (0.0020 in.)
Front axle hub bearing	Deviation	Maximum: 0.05 mm (0.0020 in.)
Rear axle hub bearing	Backlash	Maximum: 0.05 mm (0.0020 in.)
Rear axle hub bearing	Deviation	Maximum: 0.07 mm (0.0027 in.)

030EK−02

TORQUE SPECIFICATION

Part Tightened	N·m	kgf·cm	ft·lbf
Front wheel set nut	103	1,050	76
Lower ball joint x Lower suspension arm	75	765	55
Tie rod end x Steering knuckle	49	500	36
Axle hub x Front drive shaft	294	2,998	217
Front drive shaft center bearing set bolt	32	330	24
Front speed sensor set bolt (w/ ABS)	8.0	82	71
Front flexible hose and speed sensor wire harness x Shock absorber (w/ ABS)	19	192	13
Front flexible hose x Shock absorber (w/o ABS)	19	192	13
Rear wheel set nut	103	1,050	76
Rear flexible hose x Shock absorber	19	192	14
Shock absorber x Rear axle carrier	255	2,600	188
Rear axle hub set bolt	80	816	59
Rear axle carrier x Brake caliper (Rear disc brake)	62	630	46
Rear wheel brake cylinder x Brake tube (Rear drum brake)	15	155	11
Lower ball joint x Steering knuckle	123	1,254	91

BRAKE

SERVICE DATA

030FQ−07

Brake pedal height (from asphalt sheet)		144.1 − 154.1 mm (5.673 − 6.067 in.)
Brake pedal freeplay	Pedal free play:	1 − 6 mm (0.04 − 0.24 in.)
Stop lamp switch clearance		0.5 − 2.5 mm (0.020 − 0.098 in.)
Pedal reserve distance from asphalt sheet at 490 N (50 kgf, 110.2 lbf)		More than 63 mm (2.48 in.)
Brake booster push rod to piston clearance (w/ SST)	Clearance:	0 mm (0 in.)
Front brake pad thickness	Standard thickness: Minimum thickness:	12.0 mm (0.472 in.) 1.0 mm (0.039 in.)
Front brake disc thickness	Standard thickness: Minimum thickness:	28.0 mm (1.102 in.) 26.0 mm (1.024 in.)
Front brake disc runout	Maximum disc runout:	0.05 mm (0.0020 in.)
Rear brake pad thickness	Standard thickness: Minimum thickness:	10.0 mm (0.394 in.) 1.0 mm (0.039 in.)
Rear disc brake thickness	Standard thickness: Minimum thickness:	12.0 mm (0.472 in.) 10.5 mm (0.413 in.)
Rear brake disc runout	Maximum disc runout:	0.15 mm (0.0059 in.)
Rear brake drum inside diameter	Standard inside diameter: Minimum inside diameter:	228.0 mm (8.976 in.) 230.6 mm (9.079 in.)
Rear drum brake shoe lining thickness	Standard thickness: Minimum thickness:	5.0 mm (0.197 in.) 1.0 mm (0.039 in.)

030FR−08

TORQUE SPECIFICATION

Part Tightened		N·m	kgf·cm	ft·lbf
Bleeder plug		8.3	85	73 in.·lbf
Brake booster clevis lock nut		26	265	19
Brake pedal sub−assy set bolt	Normal type brake pedal:	37	375	27
Stop lamp lock nut		26	265	19
Brake pedal support assy x Reinforcement		20	204	15
Brake pedal support assy x Body		13	130	9
Brake pedal support assy x Body	Accelerator & brake pedal:	19.1	194	14
Brake pedal support assy x Accelerator pedal assy	Accelerator & brake pedal:	12	122	8.8
Master cylinder piston stopper bolt	w/o VSC:	10	100	7
Brake master cylinder x Brake booster		13	130	9
Brake line union nut		15	155	11
Vacuum hose bracket set bolt		5.4	55	48 in.·lbf
Wheel nut		103	1,050	76
Front brake cylinder mounting x Steering knuckle		107	1,090	79
Front brake cylinder x Front brake cylinder mounting		34	350	25
Front brake cylinder x Flexible hose		29	300	22
Rear disc brake cylinder mounting set bolt	TMC made: TMMK made:	61.8 47	630 475	46 34
Rear disc brake cylinder slide pin x Rear disc brake cylinder mounting	TMC made (Upper side): TMC made (Lower side): TMMK made:	 34.3 39.2 43	 350 400 440	 25 29 32
Rear disc brake cylinder x Flexible hose		29.4	300	22
Rear drum brake wheel cylinder x Backing plate		10	100	7
Brake actuator assy x Actuator bracket (w/o VSC)	DENSO made: BOSCH made:	5.4 8.0	55 82	48 in.·lbf 71 in.·lbf
Brake actuator bracket x Body		19	194	14
Brake actuator assy x Actuator bracket (w/ VSC)		5.4	55	48 in.·lbf
Brake actuator bracket x Body		19	194	14
Proportioning valve assy x Body		5.4	55	48 in.·lbf
Proportioning valve assy x Brake line		15.2	155	11
Front speed sensor x Steering knuckle		8.0	82	71 in.·lbf
Front speed sensor wire harness clamp x shock absorber	Bolt A: Bolt B:	5.0 18.8	51 192	44 in.·lbf 14
Rear axle hub set bolt		80	816	59
Yawrate sensor x Body		12.5	127	9

PARKING BRAKE

030FS−01

SERVICE DATA

Parking brake pedal travel at 300 N (31 kgf, 68.3 lbf):		3 − 6 clicks
Parking brake lever travel at 200 N (20 kgf, 44.1 lbf):		6 − 9 clicks
Rear brake disc inside diameter	Standard inside diameter: Maximum inside diameter:	170 mm (6.69 in.) 171 mm (6.73 in.)
Parking brake shoe lining thickness	Standard thickness: Minimum thickness:	2.0 mm (0.079 in.) 1.0 mm (0.039 in.)
Parking brake shoe clearance between rear shoe and lever		Less than 0.35 mm (0.0138 in.)

030FT−01

TORQUE SPECIFICATION

Part Tightened		N·m	kgf·cm	ft·lbf
Wheel nut		103	1,050	76
Parking brake cable lock nut	Parking pedal type:	5.4	55	48 in.·lbf
	Parking lever type:	5.0	51	44 in.·lbf
Parking brake lever set bolt		12.5	128	9
Parking brake control pedal set bolt		39	398	29
Console box mounting set bolt		12.5	128	9
Parking brake cable No. 1 x Turn buckle		5.4	55	48 in.·lbf
Parking brake cable No. 3 x Backing plate		7.8	80	69 in.·lbf
Parking brake cable heart insulator set nut		5.4	55	48 in.·lbf
Parking brake cable No. 4 x Body		12.5	128	9

AUTOMATIC TRANSMISSION / TRANSAXLE

0305K−24

SERVICE DATA

U151E (1MZ−FE)		
Line pressure (Wheel locked)		
	Engine idling	
	D position	372 to 412 kPa (3.8 to 4.2 kgf·cm^2, 54 to 60 psi)
	R position	672 to 742 kPa (6.8 to 7.5 kgf·cm^2, 97 to 106 psi)
	AT stall (Throttle valve fully opened)	
	D position	931 to 1,031kPa (9.5 to 10.5 kgf·cm^2, 135 to 150 psi)
	R position	1,768 to 1,968 kPa (18.0 to 20 kgf·cm^2, 256 to 285 psi)
Engine stall revolution	D position	2,400 ± 150 rpm
Time lag	N → D position	Less than 1.2 seconds
	N → R position	Less than 1.5 seconds
Engine idle speed (A/C OFF)	N position	700 ± 50 rpm
Drive plate runout	Max.	0.20 mm (0.0079 in.)
Torque converter runout	Max.	0.30 mm (0.0118 in.)
Differential oil seal drive in depth	LH side	0 ± 0.5 mm (0 ± 0.020 in.)
	RH side	0 ± 0.5 mm (0 ± 0.020 in.)
Shift schedule		
D position		
(Throttle valve fully open)	1 → 2	45 to 52 km/h (28 to 32 mph)
	2 → 3	85 to 94 km/h (53 to 58 mph)
	3 → 4	137 to 151 km/h (85 to 94 mph)
	4 → 5	193 to 209 km/h (120 to 130 mph)
	5 → 4	187 to 203 km/h (116 to 126 mph)
	4 → 3	131 to 145 km/h (81 to 90 mph)
	3 → 2	80 to 88 km/h (50 to 55 mph)
	2 → 1	37 to 44 km/h (23 to 27 mph)
(Throttle valve fully closed)	4 → 5	43 to 49 km/h (27 to 30 mph)
	5 → 4	34 to 40 km/h (21 to 25 mph)
3 position		
(Throttle valve fully open)	1 → 2	45 to 52 km/h (28 to 32 mph)
	2 → 3	85 to 94 km/h (53 to 58 mph)
	4 → 3	136 to 151 km/h (85 to 94 mph)
	3 → 2	80 to 88 km/h (50 to 55 mph)
	2 → 1	37 to 44 km/h (23 to 27 mph)
2 position		
(Throttle valve fully open)	1 → 2	45 to 52 km/h (28 to 32 mph)
	3 → 2	88 to 96 km/h (55 to 60 mph)
	2 → 1	37 to 44 km/h (23 to 27 mph)
L position		
(Throttle valve fully open)	2 → 1	38 to 45 km/h (24 to 28 mph)
Lock−up point	Throttle valve opening 5%	
D position		
5th gear	Lock−up ON	69 to 77 km/h (43 to 48 mph)
	Lock−up OFF	68 to 75 km/h (42 to 47 mph)
4th gear	Lock−up ON	96 to 105 km/h (60 to 65 mph)
	Lock−up OFF	90 to 98 km/h (56 to 61 mph)
U151E (3MZ−FE)		
Line pressure (Wheel locked)		
	Engine idling	
	D position	372 to 412 kPa (3.8 to 4.2 kgf·cm^2, 54 to 60 psi)
	R position	672 to 742 kPa (6.8 to 7.5 kgf·cm^2, 97 to 106 psi)
	AT stall (Throttle valve fully opened)	
	D position	931 to 1,031kPa (9.5 to 10.5 kgf·cm^2, 135 to 150 psi)
	R position	1,768 to 1,968 kPa (18.0 to 20 kgf·cm^2, 256 to 285 psi)
Engine stall revolution	D position	2,240 ± 150 rpm

U151E (3MZ−FE)		
Time lag	N → D position	Less than 1.2 seconds
	N → R position	Less than 1.5 seconds
Engine idle speed (A/C OFF)	N position	700 ± 50 rpm
Drive plate runout	Max.	0.20 mm (0.0079 in.)
Torque converter runout	Max.	0.30 mm (0.0118 in.)
Differential oil seal drive in depth	LH side	0 ± 0.5 mm (0 ± 0.020 in.)
	RH side	0 ± 0.5 mm (0 ± 0.020 in.)
Shift schedule		
D position		
(Throttle valve fully open)	1 → 2	39 to 47 km/h (24 to 29 mph)
	2 → 3	79 to 88 km/h (49 to 55 mph)
	3 → 4	128 to 143 km/h (80 to 89 mph)
	4 → 5	186 to 203 km/h (116 to 126 mph)
	5 → 4	179 to 196 km/h (111 to 122 mph)
	4 → 3	124 to 138 km/h (77 to 86 mph)
	3 → 2	74 to 83 km/h (46 to 52 mph)
	2 → 1	35 to 41 km/h (22 to 25 mph)
(Throttle valve fully closed)	4 → 5	44 to 50 km/h (27 to 31 mph)
	5 → 4	34 to 40 km/h (21 to 25 mph)
3 position		
(Throttle valve fully open)	1 → 2	39 to 47 km/h (24 to 29 mph)
	2 → 3	79 to 88 km/h (49 to 55 mph)
	4 → 3	127 to 141 km/h (79 to 88 mph)
	3 → 2	74 to 83 km/h (46 to 52 mph)
	2 → 1	35 to 41 km/h (22 to 25 mph)
2 position		
(Throttle valve fully open)	1 → 2	39 to 47 km/h (24 to 29 mph)
	3 → 2	82 to 90 km/h (51 to 56 mph)
	2 → 1	35 to 41 km/h (22 to 25 mph)
L position		
(Throttle valve fully open)	2 → 1	38 to 45 km/h (24 to 28 mph)
Lock−up point	Throttle valve opening 5%	
D position		
5th gear	Lock−up ON	70 to 78 km/h (43 to 48 mph)
	Lock−up OFF	68 to 76 km/h (42 to 47 mph)
4th gear	Lock−up ON	96 to 105 km/h (60 to 65 mph)
	Lock−up OFF	93 to 102 km/h (58 to 63 mph)

U250E (2AZ−FE)		
Line pressure (Wheel locked)		
	Engine idling	
	D position	372 to 412 kpa (3.8 to 4.2 kgf·cm^2, 54 to 60 psi)
	R position	672 to 742 kpa (6.8 to 7.5 kgf·cm^2, 97 to 106 psi)
	AT stall (Throttle valve fully opened)	
	D position	931 to 1,031 kpa (9.5 to 10.5 kgf·cm^2, 135 to 150 psi)
	R position	1,768 to 1,968 kpa (18.0 to 20 kgf·cm^2, 256 to 285 psi)
Engine stall revolution	D position	2,350 ± 150 rpm
Time lag	N → D position	Less than 1.2 seconds
	N → R position	Less than 1.5 seconds
Engine idle speed (A/C OFF)	N position	700 ± 50 rpm
Drive plate runout	Max.	0.20 mm (0.0079 in.)
Torque converter runout	Max.	0.30 mm (0.0118 in.)
Differential oil seal drive in depth	LH side	0 ± 0.5 mm (0 ± 0.020 in.)
	RH side	0 ± 0.5 mm (0 ± 0.020 in.)

U250E (2AZ−FE)		
Shift schedule		
D position		
(Throttle valve fully open)	1 → 2	45 to 53 km/h (28 to 33 mph)
	2 → 3	87 to 97 km/h (54 to 60 mph)
	3 → 4	137 to 153 km/h (85 to 95 mph)
	4 → 5	196 to 215 km/h (122 to 134 mph)
	5 → 4	189 to 208 km/h (117 to 129 mph)
	4 → 3	129 to 144 km/h (80 to 89 mph)
	3 → 2	79 to 88 km/h (49 to 55 mph)
	2 → 1	32 to 38 km/h (20 to 24 mph)
(Throttle valve fully closed)	4 → 5	66 to 74 km/h (41 to 46 mph)
	5 → 4	35 to 42 km/h (22 to 26 mph)
3 position		
(Throttle valve fully open)	1 → 2	45 to 53 km/h (28 to 33 mph)
	2 → 3	87 to 97 km/h (54 to 60 mph)
	4 → 3	137 to 153 km/h (85 to 95 mph)
	3 → 2	79 to 88 km/h (49 to 55 mph)
	2 → 1	32 to 38 km/h (20 to 24 mph)
2 position		
(Throttle valve fully open)	1 → 2	45 to 53 km/h (28 to 33 mph)
	3 → 2	87 to 97 km/h (54 to 60 mph)
	2 → 1	32 to 38 km/h (20 to 24 mph)
L position		
(Throttle valve fully open)	2 → 1	39 to 45 km/h (24 to 28 mph)
Lock−up point	Throttle valve opening 5%	
D position		
5th gear	Lock−up ON	74 to 83 km/h (46 to 52 mph)
	Lock−up OFF	73 to 81 km/h (45 to 50 mph)
4th gear	Lock−up ON	74 to 84 km/h (46 to 52 mph)
	Lock−up OFF	73 to 81 km/h (45 to 50 mph)
Flex lock−up point	Throttle valve opening 5%	
D position		
5th gear	Lock−up ON	55 to 62 km/h (34 to 39 mph)
	Lock−up OFF	54 to 62 km/h (34 to 39 mph)
4th gear	Lock−up ON	39 to 47 km/h (24 to 29 mph)
	Lock−up OFF	39 to 45 km/h (24 to 28 mph)

0305L−25

TORQUE SPECIFICATION

Part Tightened		N·m	kgf·cm	ft·lbf
Park/neutral position switch	Nut	6.9	70	61 in.·lbf
	Bolt	5.4	55	48 in.·lbf
Control shaft lever x Control shaft		13	130	9
Shift control cable x Control shaft lever		15	150	10
Transaxle housing x Engine block (U151E)				
	A bolt	64	653	47
	B bolt	46	470	34
	C bolt	37	377	27
Transaxle housing x Engine block (U250E)				
	A bolt	64	653	47
	B bolt	44	449	32
	C bolt	46	470	34
Torque converter clutch x Drive plate		41	418	30
Engine mounting bracket FR x Transaxle		64	653	47
Oil filler tube x Transaxle		5.5	56	49 in.·lbf
Control cable bracket x Transaxle		12	122	9
Oil cooler tube clamp x Control cable bracket		5.4	55	48 in.·lbf
Oil cooler inlet tube x Transaxle		34	350	25
Oil cooler outlet tube x Transaxle		34	350	25
Starter x Transaxle		37	377	27
Starter wire x starter		9.8	100	87 in.·lbf
Wire harness x Transaxle		13	139	9
Control cable clamp x Transaxle		12	122	9
Wire harness clamp x Transaxle		8.4	86	74 in.·lbf
Revolution sensor x Transaxle (U151E)		11	110	8
Revolution sensor NC sensor x Transaxle (U250E)		8.8	90	78 in.·lbf
Revolution sensor NT sensor x Transaxle (U250E)		11	110	8
Drain plug x Oil pan		49	500	36
Transmission wire x Transaxle		5.4	55	48 in.·lbf
ATF temperature sensor x Valve body		6.6	67	58 in.·lbf
Oil pan x Transaxle		7.8	80	69 in.·lbf
Solenoid valve x Valve body	A, B bolt	11	110	8
	C, D bolt	6.6	67	58 in.·lbf
Valve body x transaxle		11	110	8
Oil strainer x Valve body		11	110	8
Floor shift assy x Body		12	122	9
Control cable x Body		4.9	50	43 in.·lbf
Transmission case cover x Automatic transaxle		12	122	9
Flywheel housing under cover x Automatic transaxle (U151E)	Bolt	7.8	80	69 in.·lbf
	Nut	21	214	16

MANUAL TRANSMISSION / TRANSAXLE

030FO−03

SERVICE DATA

Transmission case oil seal driven in depth		3.5 ± 0.5 mm (0.138 ± 0.020 in.)
Front transaxle case cover oil seal drive in depth		0 ± 0.5 mm (0 ± 0.020 in.)
Manual transaxle assy		
5th gear thrust clearance	Standard clearance	0.10 to 0.65 mm (0.0039 to 0.0256 in.)
5th gear radial clearance	Standard clearance	0.009 to 0.050 mm (0.0004 to 0.0020 in.)
Reverse idler gear sub−assy inside diameter	Standard inside diameter Maximum inside diameter	20.056 to 20.074 mm (0.7896 to 0.7903 in.) 20.074 mm (0.7903 in.)
Reverse idler gear shaft outer diameter	Standard outer diameter Minimum outer diameter	19.984 to 20.000 mm (0.7868 to 0.7874 in.) 19.984 mm (0.7868 in.)
Transmission hub sleeve No.3 groove − thickness of the claw part on gear shift fork No.3	Standard clearance	0.15 to 0.35 mm (0.0059 to 0.0138 in.)
5th gear inside diameter	Standard inside diameter Maximum inside diameter	34.981 to 34.997 mm (1.3772 to 1.3778 in.) 34.997 mm (1.3778 in.)
Control shaft cover bimetal formed bush clearance		0.081 to 0.149 mm (0.0032 to 0.0059 in.)
Front transaxle case cover oil seal driven in depth		0 ± 0.5 mm (0 ± 0.020 in.)
Transmission case oil seal driven in depth		3.5 ± 0.5 mm (0.138 ± 0.020 in.)
Output shaft rear bearing clearance		3.8 to 4.4 mm (0.150 to 0.173 in.)
Output shaft bearing preload	New bearing Used bearing	0.8 to 1.6 N·m (8.16 to 16.32 kgf·cm, 7.1 to 14.2 in.·lbf) 0.5 to 1.0 N·m (5.10 to 10.20 kgf·cm, 4.4 to 8.9 in.·lbf)
Output shaft rear bearing shim thickness	0 1 2 3 4 5 6 7 8 9 A B C D E F G H J K L M N P Q	1.30 mm (0.0512 in.) 1.35 mm (0.0531 in.) 1.40 mm (0.0551 in.) 1.45 mm (0.0571 in.) 1.50 mm (0.0591 in.) 1.55 mm (0.0610 in.) 1.60 mm (0.0630 in.) 1.65 mm (0.0650 in.) 1.70 mm (0.0669 in.) 1.75 mm (0.0689 in.) 1.80 mm (0.0709 in.) 1.85 mm (0.0728 in.) 1.90 mm (0.0748 in.) 1.95 mm (0.0768 in.) 2.00 mm (0.0787 in.) 2.05 mm (0.0807 in.) 2.10 mm (0.0827 in.) 2.15 mm (0.0846 in.) 2.20 mm (0.0866 in.) 2.25 mm (0.0886 in.) 2.30 mm (0.0906 in.) 2.35 mm (0.0925 in.) 2.40 mm (0.0945 in.) 2.45 mm (0.0965 in.) 2.50 mm (0.0984 in.)
Front differential case tapered roller bearing preload	New bearing Used bearing	0.8 to 1.6 N·m (8.16 − 16.32 kgf·cm, 7.1 to 14.2 in.·lbf) 0.5 to 1.0 N·m (5.10 − 10.20 kgf·cm, 4.4 to 8.9 in.·lbf)

Front differential case shim RR thickness	0	2.00 mm (0.0787 in.)
	1	2.05 mm (0.0807 in.)
	2	2.10 mm (0.0827 in.)
	3	2.15 mm (0.0846 in.)
	4	2.20 mm (0.0866 in.)
	5	2.25 mm (0.0886 in.)
	6	2.30 mm (0.0906 in.)
	7	2.35 mm (0.0925 in.)
	8	2.40 mm (0.0945 in.)
	9	2.45 mm (0.0965 in.)
	A	2.50 mm (0.0984 in.)
	B	2.55 mm (0.1004 in.)
	C	2.60 mm (0.1024 in.)
	D	2.65 mm (0.1043 in.)
	E	2.70 mm (0.1063 in.)
	F	2.75 mm (0.1083 in.)
	G	2.80 mm (0.1102 in.)
	H	2.85 mm (0.1122 in.)
Front differential case oil seal clearance		1 to 2 mm (0.0394 to 0.0787 in.)
Input shaft front bearing clearance		4.28 to 4.60 mm (0.1685 to 0.1811 in.)
Reverse restrict pin clearance		12.5 to 13.5 mm (0.492 to 0.531 in.)
Transmission clutch hub No.3 snap ring clearance		0.1 mm or less (0.0039 in. or less)
Transmission clutch hub No.3 snap ring thickness	a	1.75 to 1.80 mm (0.0689 to 0.0709 in.)
	b	1.80 to 1.85 mm (0.0709 to 0.0728 in.)
	c	1.85 to 1.90 mm (0.0728 to 0.0748 in.)
	d	1.90 to 1.95 mm (0.0748 to 0.0768 in.)
	e	1.95 to 2.00 mm (0.0768 to 0.0787 in.)
	f	2.00 to 2.05 mm (0.0787 to 0.0807 in.)
	g	2.05 to 2.10 mm (0.0807 to 0.0827 in.)
	h	2.10 to 2.15 mm (0.0827 to 0.0846 in.)
	j	2.15 to 2.20 mm (0.0846 to 0.0866 in.)
5th gear radial clearance	Standard clearance	0.009 to 0.050 mm (0.0004 to 0.0020 in.)
5th gear thrust clearance	Standard clearance	0.10 to 0.65 mm (0.0039 to 0.0260 in.)
Input shaft assy		
4th gear thrust clearance	Standard clearance	0.10 to 0.57 mm (0.0039 to 0.0224 in.)
3rd gear thrust clearance	Standard clearance	0.10 to 0.35 mm (0.0039 to 0.0138 in.)
4th gear radial clearance	KOYO made	0.009 to 0.053 mm (0.0004 to 0.0021 in.)
	NSK made	0.009 to 0.051 mm (0.0004 to 0.0020 in.)
3rd gear radial clearance	KOYO made	0.009 to 0.053 mm (0.0004 to 0.0021 in.)
	NSK made	0.009 to 0.051 mm (0.0004 to 0.0020 in.)
Input shaft run out	Maximum run out:	0.03 mm (0.0012 in.)
Input shaft standard outer diameter	A	35.984 to 36.000 mm (1.4167 to 1.4173 in.)
	B	35.984 to 36.000 mm (1.4167 to 1.4173 in.)
	C	27.957 to 27.972 mm (1.1007 to 1.1013 in.)
Input shaft minimum outer diameter	A	35.984 mm (1.4167 in.)
	B	35.984 mm (1.4167 in.)
	C	27.957 mm (1.1007 in.)
4th gear inside diameter	Standard inside diameter	42.009 to 42.025 mm (1.6539 to 1.6545 in.)
	Maximum inside diameter	42.025 mm (1.6545 in.)
3rd gear inside diameter	Standard inside diameter	43.009 to 43.025 mm (1.6933 to 1.6939 in.)
	Maximum inside diameter	43.025 mm (1.6939 in.)
Between the 4th gear spline end and synchronizer outer ring back clearance		0.75 to 1.65 mm (0.0295 to 0.0650 in.)
Between the 3rd gear spline end and synchronizer outer ring back clearance		0.65 to 1.75 mm (0.0256 to 0.0689 in.)
Transmission hub sleeve No.3 groove − thickness of the claw part on gear shift fork No.1	Standard clearance	0.11 to 0.69 mm (0.0043 to 0.0272 in.)
Transmission clutch hub No.2 snap ring clearance	Standard clearance	0.1 mm or less (0.0039 in. or less)

Transmission clutch hub No.2 snap ring thickness	H	2.30 to 2.35 mm (0.0906 to 0.0925 in.)
	J	2.35 to 2.40 mm (0.0925 to 0.0945 in.)
	K	2.40 to 2.45 mm (0.0945 to 0.0965 in.)
	L	2.45 to 2.50 mm (0.0965 to 0.0984 in.)
	M	2.50 to 2.55 mm (0.0984 to 0.1004 in.)
	N	2.55 to 2.60 mm (0.1004 to 0.1024 in.)
	P	2.60 to 2.65 mm (0.1024 to 0.1043 in.to
Input shaft rear radial ball bearing snap ring clearance	Standard clearance	0.1 mm or less (0.0039 in. or less)
Input shaft rear radial ball bearing snap ring thickness	1	2.35 to 2.40 mm (0.0925 to 0.0945 in.)
	2	2.40 to 2.45 mm (0.0945 to 0.0965 in.)
	3	2.45 to 2.50 mm (0.0965 to 0.0984 in.)
	4	2.50 to 2.55 mm (0.0984 to 0.1004 in.)
	5	2.55 to 2.60 mm (0.1004 to 0.1024 in.)
	6	2.60 to 2.65 mm (0.1024 to 0.1043 in.)
	7	2.65 to 2.70 mm (0.1043 to 0.1063 in.)
	8	2.70 to 2.75 mm (0.1063 to 0.1083 in.)
3rd gear radial clearance	KOYO made	0.009 to 0.053 mm (0.0004 to 0.0021 in.)
	NSK made	0.009 to 0.051 mm (0.0004 to 0.0020 in.)
4th gear radial clearance	KOYO made	0.009 to 0.053 mm (0.0004 to 0.0021 in.)
	NSK made	0.009 to 0.051 mm (0.0004 to 0.0020 in.)
3rd gear thrust clearance	Standard clearance	0.10 to 0.35 mm (0.0039 to 0.0138 in.)
4th gear thrust clearance	Standard clearance	0.10 to 0.57 mm (0.0039 to 0.0224 in.)
Output shaft assy		
1st gear thrust clearance	Standard clearance	0.25 to 0.40 mm (0.0098 to 0.0157 in.)
2nd gear thrust clearance	Standard clearance	0.10 to 0.35 mm (0.0039 to 0.0138 in.)
1st gear radial clearance	KOYO made	0.009 to 0.053 mm (0.0004 to 0.0021 in.)
	NSK made	0.009 to 0.051 mm (0.0004 to 0.0020 in.)
2nd gear radial clearance	KOYO made	0.009 to 0.053 mm (0.0004 to 0.0021 in.)
	NSK made	0.009 to 0.051 mm (0.0004 to 0.0020 in.)
Output shaft run out	Maximum run out	0.03 mm (0.0012 in.)
Output shaft standard outer diameter	A	37.610 to 37.626 mm (1.4807 to 1.4813 in.)
	B	34.502 to 34.512 mm (1.3583 to 1.3587 in.)
Output shaft minimum outer diameter	A	37.610 mm (1.4807 in.)
	B	34.502 mm (1.3702 in.)
2nd gear inside diameter	Standard inside diameter	50.009 to 50.025 mm (1.9689 to 1.9695 in.)
	Maximum inside diameter	50.025 mm (1.9695 in.)
1st gear inside diameter	Standard inside diameter	51.009 to 51.025 (2.0082 to 2.0089 in.)
	Maximum inside diameter	51.025 mm (2.0089 in.)
Between the 2nd gear while and synchronizer ring No.2 back clearance		0.70 to 1.45 mm (0.0276 to 0.0571 in.)
Between the 1st gear while and synchronizer ring set No.1 back clearance		0.70 to 1.45 mm (0.0276 to 0.0571 in.)
Reverse gear groove − thickness of the claw part on gear shift fork No.1 clearance	Standard clearance	0.15 to 0.35 mm (0.0059 to 0.0138 in.)
2nd gear radial clearance	KOYO made	0.009 to 0.053 mm (0.0004 to 0.0021 in.)
	NSK made	0.009 to 0.051 mm (0.0004 to 0.0020 in.)
1st gear radial clearance	KOYO made	0.009 to 0.053 mm (0.0004 to 0.0021 in.)
	NSK made	0.009 to 0.051 mm (0.0004 to 0.0020 in.)
2nd gear thrust clearance	Standard clearance	0.10 to 0.35 mm (0.0039 to 0.0138 in.)
1st gear thrust clearance	Standard clearance	0.25 to 0.40 mm (0.0098 to 0.0157 in.)
Differential case assy		
Front differential side gear backlash	Standard backlash	0.10 to 0.20 mm (0.0039 to 0.0079 in.)
Front differential pinion thrust washer thickness	Minimum thickness	0.9 mm (0.035 in.)
Front differential pinion shaft No.1 thickness	Minimum thickness	17.975 mm (0.70768 in.)
Front differential side gear backlash	Standard backlash	0.05 to 0.20 mm (0.0020 to 0.0079 in.)
Front differential side gear thrust washer thickness	1	1.00 mm (0.0394 in.)
	2	1.10 mm (0.0433 in.)
	3	1.20 mm (0.0472 in.)
	4	1.30 mm (0.0512 in.)

Shift & select lever shaft assy	
Control shaft cover bimetal formed bush drive in depth	0 ± 0.25 mm (0 ± 0. 010 in.)
Control shaft cover oil seal drive in depth	28.5 ± 0.50 mm (1.122 ± 0. 020 in.)
Shift lever slotted pin clearance to the shift lever inner assy	−0.5 to 0.5 mm (−0.0197 to 0.0197 in.)
Shift lever slotted pin clearance to the shift lever inner No.2	5.8 to 6.8 mm (0.228 to 0.268 in.)

030FP−03

TORQUE SPECIFICATION

Part Tightened		N·m	kgf·cm	ft·lbf
Hub nut		103	1,050	76
Floor shift lever assembly x Body		12	122	9
Floor shift cable transmission control shift clamp x Body		5.0	51	44 in.·lbf
Floor shift cable transmission control shift retainer x Body		5.0	51	44 in.·lbf
Gear shift fork No. 1 set bolt		24	245	18
Reverse shift arm bracket assy x Manual transaxle case		17	173	13
Reverse restrict pin plug		13	133	9.6
Oil receiver pipe No. 1 x Manual transmission case		17	175	13
Clutch tube bracket set bolt		17	173	13
Reverse idler gear shaft bolt		30	306	22
Gear shift fork No. 3 shift fork bolt		24	244	17
Manual transmission output shaft rear set nut		123	1,250	90
Drain plug sub−assy		49	500	36
Manual transmission filler plug		49	500	36
Back up lamp switch assy x Manual transmission case		40	410	30
Manual transmission breather plug x Manual transmission case		49	500	36
Lock ball assy No. 1 x Manual transmission case		29	300	22
Control shaft cover set bolt		20	200	14
Control shift lever x Shift & select lever shaft		6.4	65	57 in.·lbf
Selecting ballcrank assy x Manual transmission case		20	204	15
Release fork support x Manual transaxle case		47	480	35
Manual transaxle x Engine	Bolt A	64	653	47
	Bolt B	46	470	34
	Bolt C	44	449	32
Engine mounting insulator LH x Manual transaxle		64	653	47
Exhaust pipe support bracket No. 1 set bolt		19	194	14
Manual transmission case protector x Manual transaxle		18	184	13
Engine mounting bracket FR x Manual transaxle		64	653	47
Starter assy x Manual transaxle		39	398	29
Wire harness clamp bracket x Manual transaxle		8.4	86	74 in.·lbf
Engine wire No. 3 x Manual transaxle		9.6	98	85 in.·lbf
Transmission case x Manual transaxle case		29	296	21
Manual transaxle case x Transmission case		29	296	21
Bearing retainer RR x Transmission case		43	438	32
Manual transaxle case receiver x Manual transaxle case		7	71	62 in.·lbf
Gear shift head No.1 x Gear shift fork shaft No.2		24	245	18
Gear shift fork No.1 x Gear shift fork shaft No.1		24	245	18
Reverse shift arm bracket x Manual transaxle case		17	173	13
Reverse restrict pin plug x Transmission case		13	133	9.6
Oil receiver pipe No.1 x Transmission case		17	173	13
Oil receiver pipe No.2 x Transmission case		17	173	13
Clutch tube bracket x Transmission case		17	173	13
Reverse idler gear shaft bolt x Transmission case		30	306	22
Transmission clutch hub No.3 gear shift fork shaft x input shaft		24	245	18
Manual transmission output rear set nat. x Output shaft		123	1,254	91
Drain (MTM) plug sub−assy x Transmission case		49	500	36
Manual transmission filler plug x Transmission case		49	500	36
Back up lamp switch assy x Transmission case		40	408	30
Manual transmission breather plug x Transmission case		49	500	36
Lock ball assy No.1 x Transmission case		29	296	21

Part Tightened	N·m	kgf·cm	ft·lbf
Control shift cover x Transmission case	20	204	15
Control shift lever x Shift & select lever assy	6.4	65	57 in.·lbf
Selecting bell crank assy x Transmission case	20	204	15
Selecting bellcrank support x Selecting bellcrank No.2 plate washer	12	122	9
Release fork support x Manual transaxle case	47	480	35
Front differential ring gear x Front differential case	106	1,081	78

CLUTCH

SERVICE DATA

030EF−05

Pedal height from asphalt sheet		159.0 to 169.0 mm (6.260 to 6.654 in.)
Clutch pedal free play		5.0 to 15.0 mm (0.197 to 0591 in.)
Clutch pedal push rod play at pedal top		1.0 to 5.0 mm (0.039 to 0.197 in.)
Slotted spring pin protrusion	Maximum	1.5 to 3.5 mm (0.059 to 0.138 in.)
Disc rivet head depth	Maximum	0.3 mm (0.012 in.)
Disc runout	Minimum	0.8 mm (0.031 in.)
Diaphragm spring finger wear	Maximum depth: Maximum width:	0.5 mm (0.020 in.) 6.0 mm (0.236 in.)
Flywheel runout	Maximum	0.1 mm (0.004 in.)
Diaphragm spring finger wear	Maximum depth	0.5 mm (0.020 in.)
Clutch release point from pedal full stroke end position		25 mm (0.98 in.) or more

030EG−04

TORQUE SPECIFICATION

Part Tightened	N·m	kgf·cm	ft·lbf
Clutch pedal sub−assy x Clutch pedal support	39	398	29
Clutch pedal support set bolt x Body	19	195	14
Cylinder push rod clevis lock nut	26	260	19
Clutch master cylinder assy x Clutch pedal support	12	120	9
Clutch master cylinder assy x Flexible hose tube	15	155	11
Master cylinder bleeder plug	8.3	85	73 in.·lbf
Release cylinder bleeder plug	8.3	85	73 in.·lbf
Clutch release cylinder assy x Transaxle housing	12	120	9
Clutch accumulator assy x Clutch release cylinder assy	12	120	9
Clutch release cylinder assy x flexible hose tube	15	155	11
Clutch cover assy x Flywheel	19	195	14
Release fork support x Transaxle assy	47	480	35
Clutch start switch assy set nut	16	160	12

SFI SYSTEM (2AZ−FE)

10068−06

ON−VEHICLE INSPECTION

1. CHECK THROTTLE BODY

(a) Listen to the throttle control motor operating sounds.
  (1) Turn the ignition switch ON.
  (2) When pressing the accelerator pedal position sensor lever, listen to the running motor. Make sure no friction noise comes from the motor.

If friction noise exists, replace the throttle body.

(b) Check the throttle position sensor.
  (1) Connect the hand−held tester or OBD II scan tool to the DLC3.
  (2) Turn the ignition switch ON.
  (3) Check that the check engine warning light does not light up.
  (4) Under CURRENT DATA, the throttle valve opening percentage (THROTTLE POS) should be within the standard value range below.

  Standard throttle valve opening percentage: 60% or more

If the percentage is less than 60%, replace the throttle body.

NOTICE:

When checking the standard throttle valve opening percentage, the transmission should be in the neutral position.

2. CHECK ACCELERATOR PEDAL POSITION SENSOR

(a) Turn the ignition switch ON. Under CURRENT DATA, the voltage of the throttle position sensor should be within the standard value range below.

  Standard: 0.6 to 1.0 V

If the result is not as specified, replace the accelerator pedal position sensor.

3. CHECK CAMSHAFT TIMING OIL CONTROL VALVE ASSY

(a) Connect the hand−held tester or OBD II scan tool to the DLC3.
(b) Turn the ignition switch ON.
(c) Start the engine and warmed it up.
(d) Select the VVT from the ACTIVE TEST menu.
(e) Check the engine speed when the OCV is operated by the hand−held tester.

  Standard:

Condition	Specified Condition
VVT system is OFF (OCV is OFF)	Normal engine speed
VVT system is ON (OCV is ON)	Rough idle or engine stalled

If the result is not as specified, replace the OCV assy.

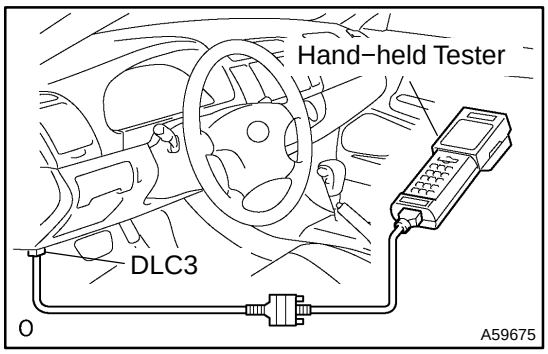

4. CHECK MASS AIR FLOW METER (MAF meter)

NOTICE:

- **Perform the MAF meter inspection by following the procedures below.**
- **Only replace the MAF meter when both the LONG FT#1 value and MAF value in the DATA LIST (with the engine stopped) are not within the normal operating range.**

(a) Perform confirmation driving pattern.

(1) Connect the hand−held tester to the DLC3.
(2) Turn the ignition switch ON.
(3) Turn the tester on.
(4) Clear the DTCs (see page 05−41).
(5) Start the engine and warm it up with all accessory switches off (until the engine coolant temperature is 75 C (167 F) or more).
(6) Drive the vehicle at 31 mph (50 km/h) or more for 3 to 5 minutes. *1
(7) Allow the engine to idle for 2 minutes. *2
(8) Perform steps *1 and *2 at least 3 times.

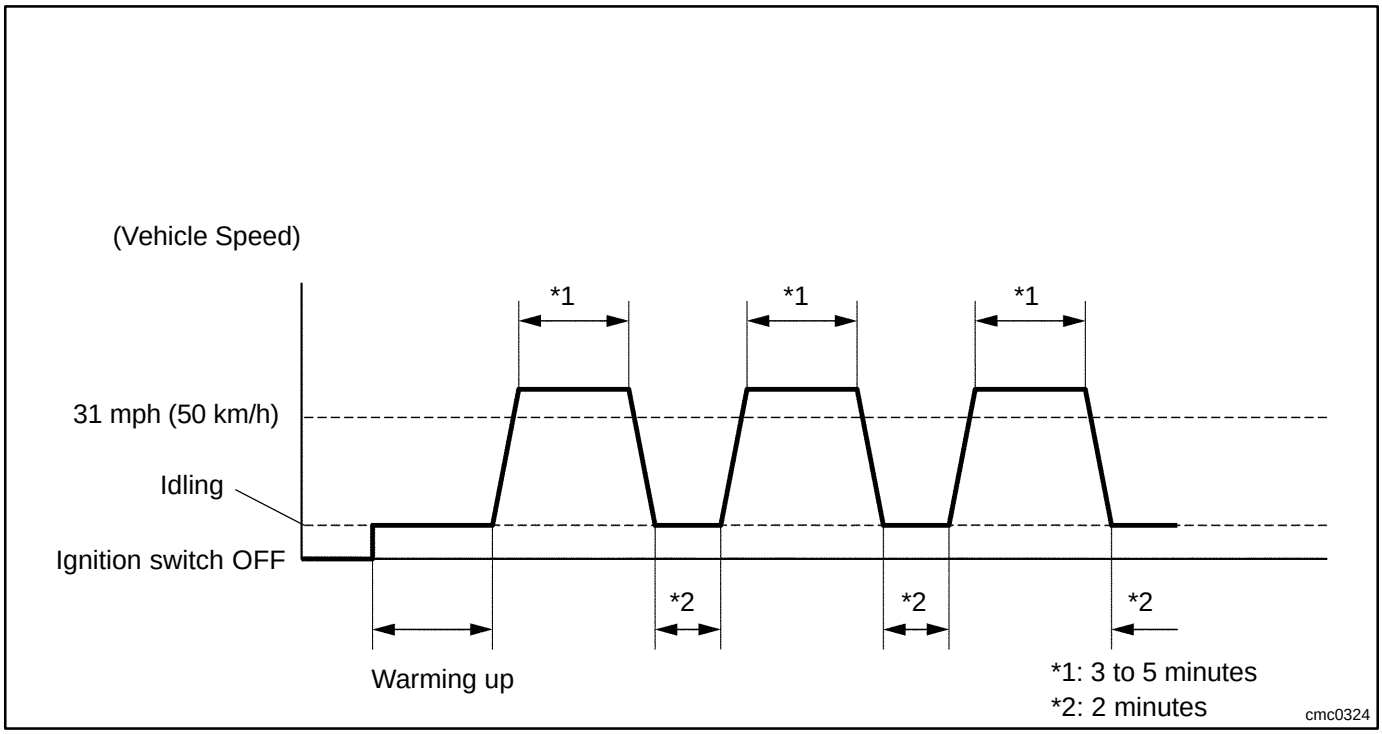

(b) Read value using the hand−held tester (LONG FT#1).
(1) Select the following menu items: DIAGNOSIS / ENHANCED OBD II / DATA LIST / PRIMARY / LONG FT#1.
(2) Read the values displayed on the tester.
Standard value:
Within −15 to +15 %

If the result is not within the specified range, perform the inspection below.

(c) Read value using the hand−held tester (MAF).

NOTICE:

- **Turn off the engine.**
- **Perform the inspection with the vehicle indoors and on a level surface.**
- **Perform the inspection of the MAF meter while it is installed to the air cleaner case (installed to the vehicle).**
- **During the test, do not use the exhaust air duct to perform suction on the exhaust pipe.**

(1) Turn off the engine (do not run the engine).
(2) Turn the ignition switch ON.
(3) Turn the tester on.
(4) Select the following menu items: DIAGNOSIS / ENHANCED OBD II / DATA LIST / PRIMARY / PRIMARY / MAF.
(5) Wait 30 seconds, and read the values on the hand−held tester.

Standard condition:
Less than 0.54 g/s

- If the result is not as specified, replace the MAF meter.
- If the result is within the specified range, inspect the cause of the extremely rich or lean air fuel ratio (see page 05−138).

100IO−04

INSPECTION

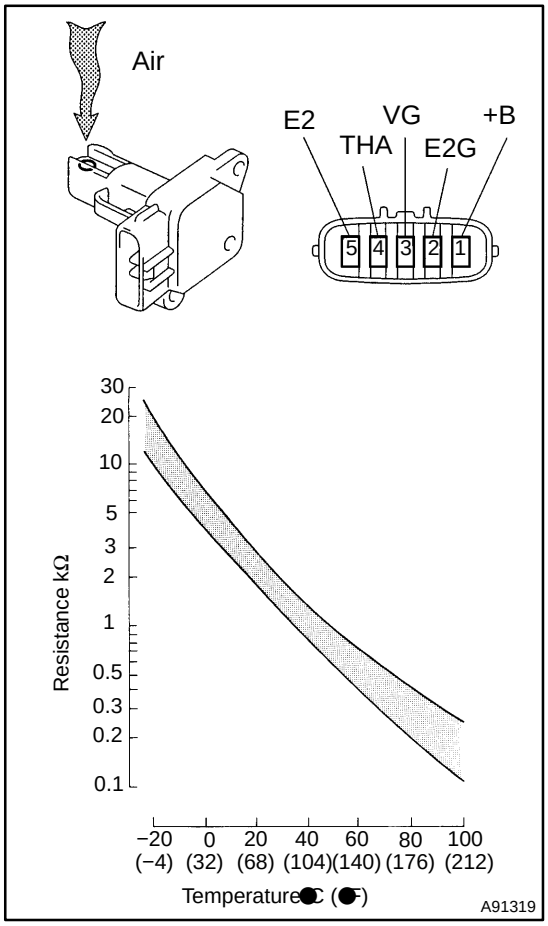

1. INSPECT MASS AIR FLOW METER

(a) Check the output voltage.

(1) Apply battery voltage across terminals 1 (+B) and 2 (E2G).

(2) Using a voltmeter, connect the positive (+) tester probe to terminal VG, and negative (−) tester probe to terminal E2G.

(3) Blow air into the MAF meter, and check that the voltage fluctuates.

(b) Measure the resistance between terminals 4 (THA) and 5 (E2).

Standard:

Condition	Specified Condition
−20°C (−4°F)	13.6 to 18.4 kΩ
20°C (68°F)	2.21 to 2.69 kΩ
60°C (140°F)	0.493 to 0.667 kΩ

If the result is not as specified, replace the MAF meter.

2. INSPECT CAMSHAFT TIMING OIL CONTROL VALVE ASSY

(a) Measure the resistance between the terminals.

Standard: 6.9 to 7.9 Ω at 20°C (68°F)

If the result is not as specified, replace the OCV assy.

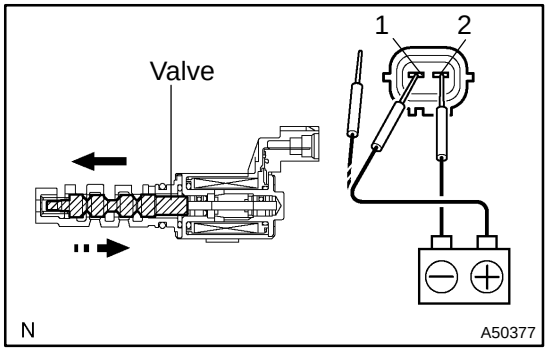

(b) Connect the battery's positive (+) lead to terminal 1 and negative (−) lead to terminal 2, and check the movement of the valve.

NOTICE:

Confirm that the valve moves freely and does not become stuck in any position.

If necessary, replace the OCV assy.

HINT:

If the valve cannot return properly because of foreign matter, a small pressure leak in the advanced direction may occur and a DTC will be output.

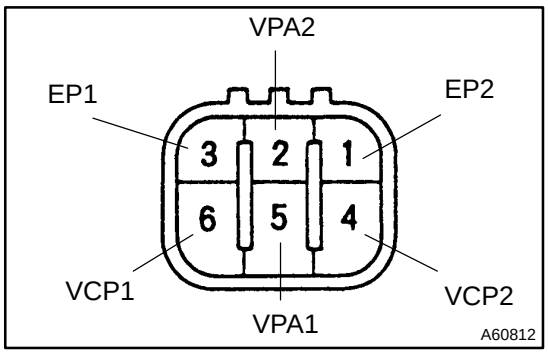

3. INSPECT ACCELERATOR PEDAL ASSY

(a) Measure the resistance between the terminals.

Standard:

Tester Connection	Specified Condition
2 (VPA2) − 3 (EP1)	5.0 kΩ or less
5 (VPA1) − 1 (EP2)	5.0 kΩ or less
6 (VCP1) − 3 (EP1)	2.25 to 4.75 kΩ
4 (VCP2) − 1 (EP2)	2.25 to 4.75 kΩ

If the result is not as specified, replace the pedal assy.

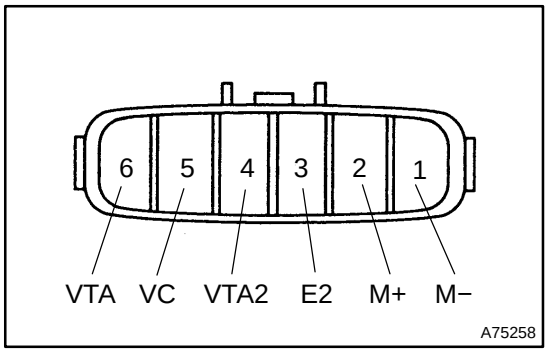

4. INSPECT THROTTLE BODY ASSY

(a) Measure the resistance between the terminals.

Standard:

Tester Connection	Condition	Specified Condition
2 (M+) − 1 (M−)	20●C (68●F)	0.3 to 100 Ω
5 (VC) − 3 (E2)	20●C (68●F)	1.2 to 3.2 kΩ

If the result is not as specified, replace the throttle body assy.

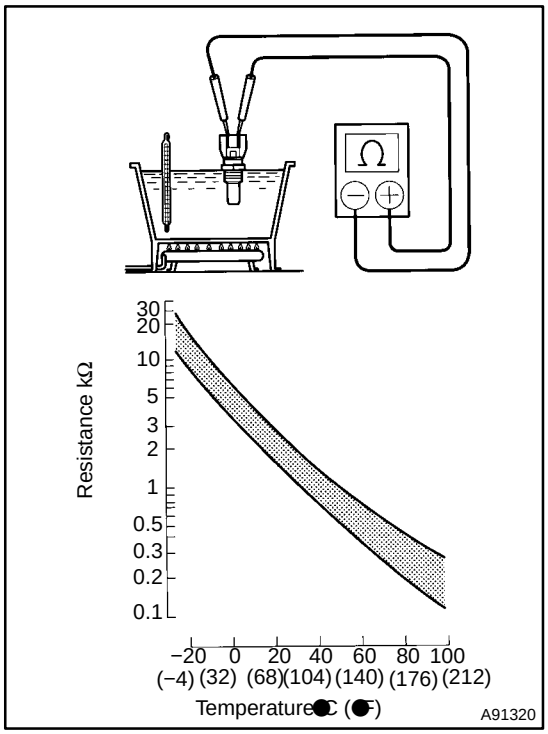

5. INSPECT ENGINE COOLANT TEMPERATURE SENSOR

(a) Measure the resistance between terminals 1 and 2.

Standard:

Condition	Specified Condition
Approx. 20●C (68●F)	2.32 to 2.59 kΩ
Approx. 80●C (176●F)	0.310 to 0.326 kΩ

If the result is not as specified, replace the sensor.

NOTICE:

If checking the engine coolant temperature sensor in the water, keep the terminals dry. After the check, wipe the sensor dry.

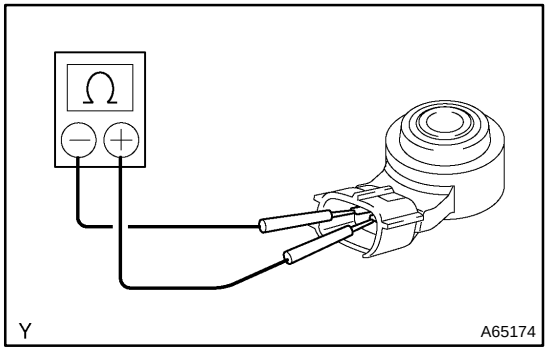

6. INSPECT KNOCK SENSOR

(a) Using an ohmmeter, measure the resistance between the terminals.

Standard: 120 to 280 kΩ at 20●C (68●F)

HINT:

If the result is not as specified, replace the sensor.

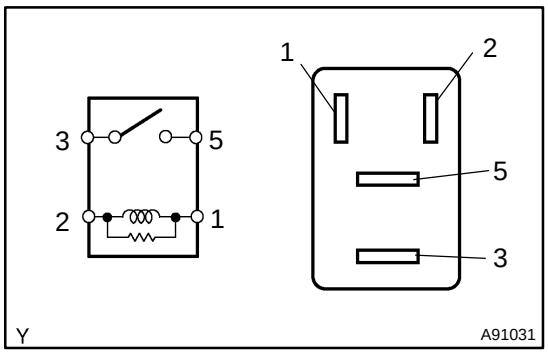

7. INSPECT RELAY (Marking: EFI, C/OPN)

(a) Using an ohmmeter, measure the resistance of the relay.

Standard:

Tester Connection	Specified Condition
3 − 5	10 kΩ or higher
3 − 5	Below 1Ω (when battery voltage is applied to terminals 1 and 2)

If the result is not as specified, replace the relay.

THROTTLE BODY ASSY (2AZ−FE)

1006A−06

COMPONENTS

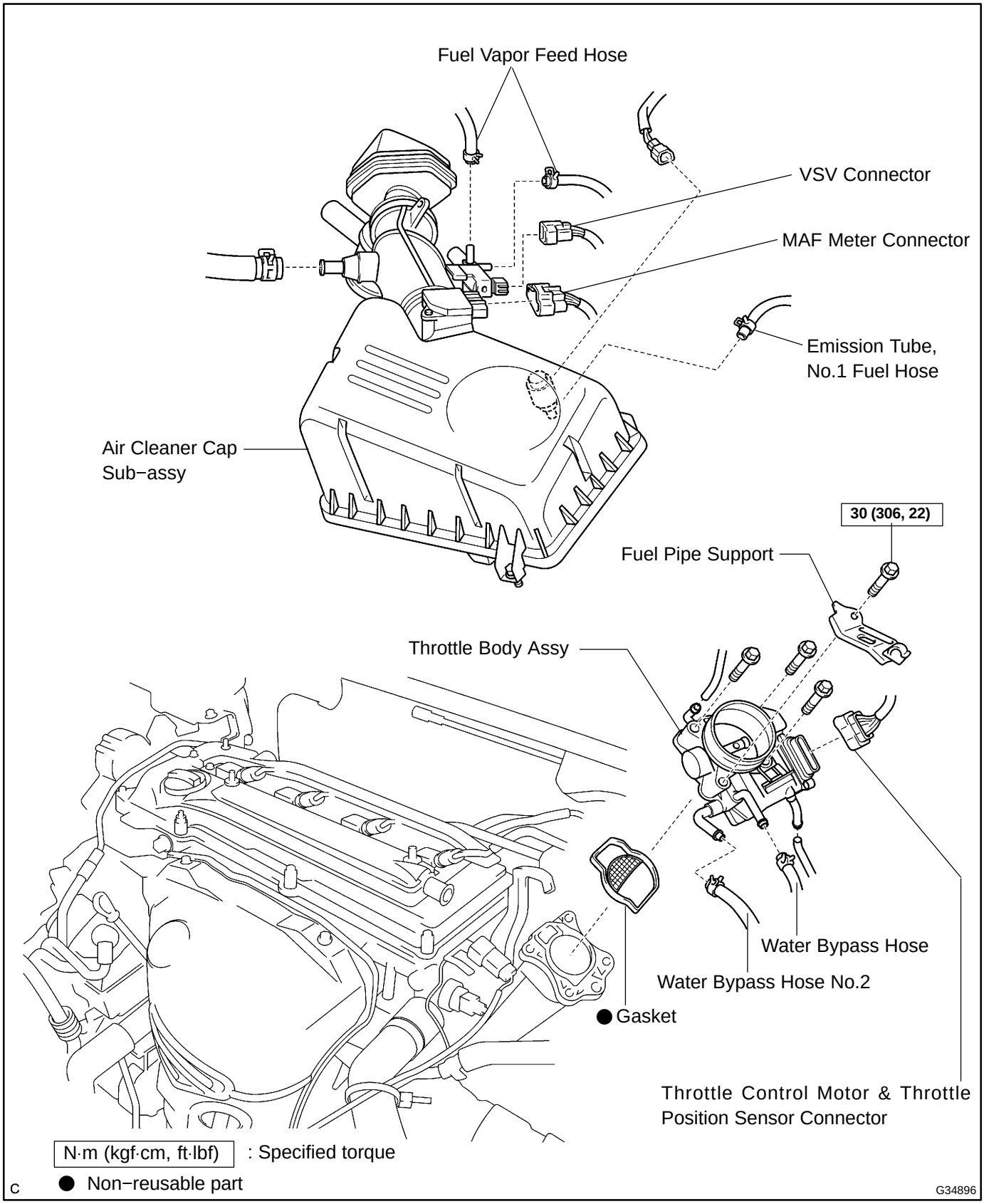

1006B−06

REPLACEMENT

1. **DRAIN ENGINE COOLANT (See page 16−6)**
2. **REMOVE AIR CLEANER CAP WITH AIR CLEANER HOSE**
3. **REMOVE THROTTLE BODY ASSY**

(a) Disconnect the throttle control motor & throttle position sensor connector.
(b) Disconnect the 2 vacuum hoses from the throttle body.
(c) Disconnect the 2 water bypass hoses.

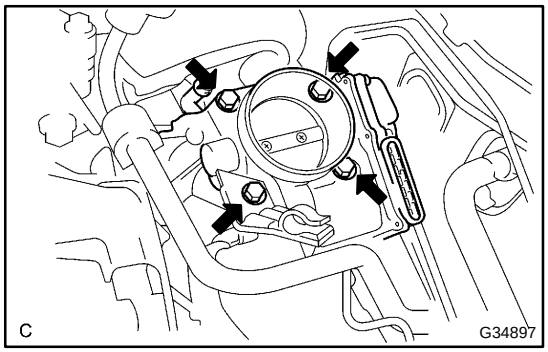

(d) Remove the 4 bolts, fuel pipe support and throttle body.
(e) Remove the gasket.

4. **INSTALL THROTTLE BODY ASSY**

(a) Install a new gasket on the intake manifold, as shown in the illustration.

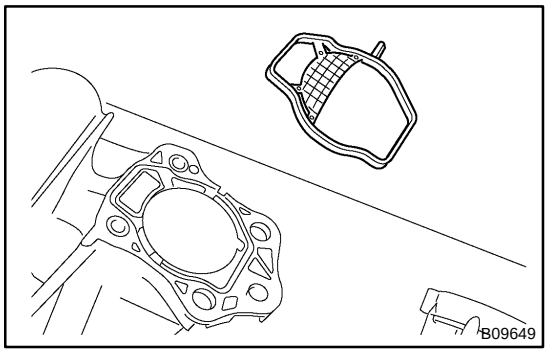

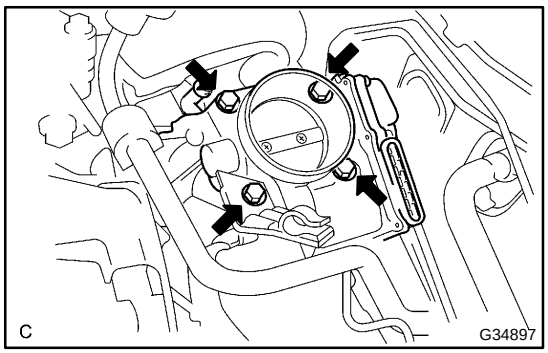

(b) Install the throttle body and fuel pipe support with the 4 bolts.
Torque: 30 N·m (306 kgf·cm, 22 ft·lbf)
(c) Connect the 2 water bypass hoses to the throttle body.
(d) Connect the 2 vacuum hoses to the throttle body.
(e) Connect the throttle control motor & throttle position sensor connector.

5. **INSTALL AIR CLEANER CAP WITH AIR CLEANER HOSE**
6. **ADD ENGINE COOLANT (See page 16−6)**
7. **CHECK FOR ENGINE COOLANT LEAKS (See page 16−1)**

KNOCK SENSOR (2AZ−FE)

100IP−04

REPLACEMENT

1. **DRAIN ENGINE COOLANT (See page 16−6)**
2. **REMOVE AIR CLEANER CAP WITH AIR CLEANER HOSE**
3. **REMOVE THROTTLE BODY ASSY (See page 10−6)**

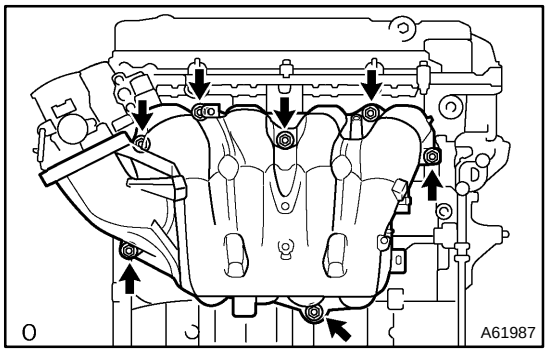

4. REMOVE INTAKE MANIFOLD

(a) Remove the 5 bolts, 2 nuts, intake manifold and gasket.

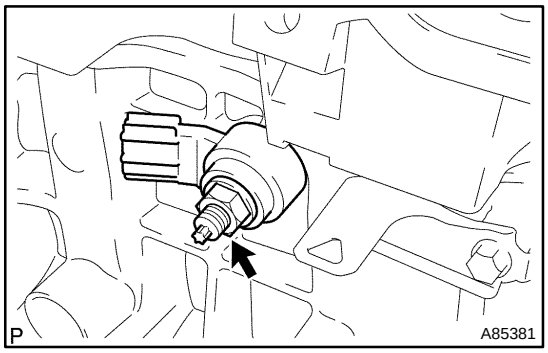

5. REMOVE KNOCK SENSOR

(a) Disconnect the knock sensor connector.

(b) Remove the nut and knock sensor.

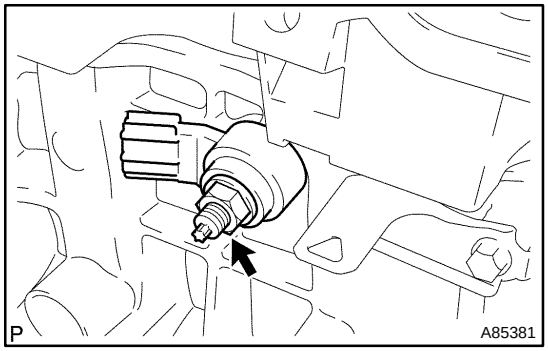

6. INSTALL KNOCK SENSOR

(a) Install the knock sensor with the nut.
Torque: 20 N·m (204 kgf·cm, 15 ft·lbf)

(b) Connect the knock sensor connector.

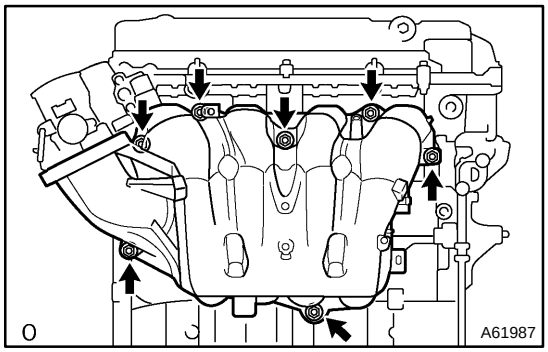

7. INSTALL INTAKE MANIFOLD

(a) Install a new gasket and the intake manifold with the 5 bolts and 2 nuts.
Torque: 30 N·m (306 kgf·cm, 22 ft·lbf)

8. **INSTALL THROTTLE BODY ASSY (See page 10−6)**
9. **INSTALL AIR CLEANER CAP WITH AIR CLEANER HOSE**
10. **CHECK CONNECTION OF VACUUM HOSE**
11. **ADD ENGINE COOLANT (See page 16−6)**
12. **CHECK FOR ENGINE COOLANT LEAKS (See page 16−1)**

ECM (2AZ−FE)

100JX−02

REPLACEMENT

1. **DISCONNECT BATTERY NEGATIVE TERMINAL**
2. **REMOVE FRONT DOOR SCUFF PLATE RH (See page 76−22)**
3. **REMOVE COWL SIDE TRIM SUB−ASSY RH (See page 76−22)**
4. **REMOVE INSTRUMENT PANEL UNDER COVER SUB−ASSY NO.1 (See page 71−16)**
5. **REMOVE INSTRUMENT PANEL SUB−ASSY LOWER (See page 71−16)**

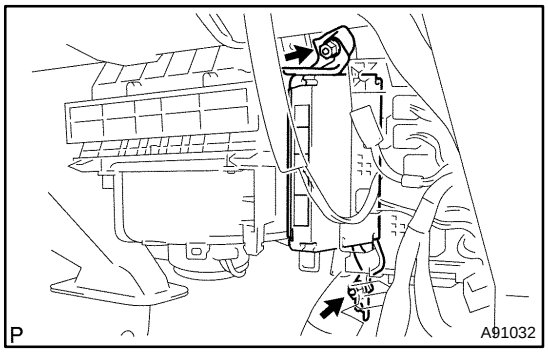

6. REMOVE ECM

(a) Remove the 2 wire harness clamps.
(b) Disconnect the 5 ECM connectors.
(c) Remove the 2 nuts and ECM.

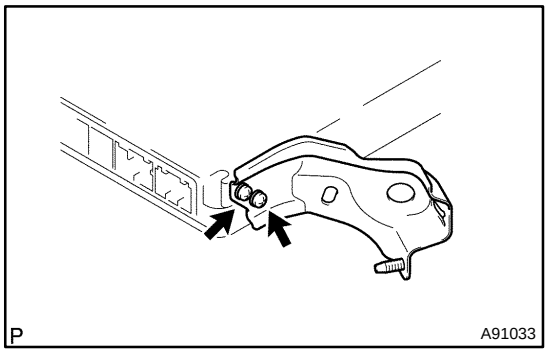

7. REMOVE ECM BRACKET

(a) Remove the 2 screws and ECM bracket.

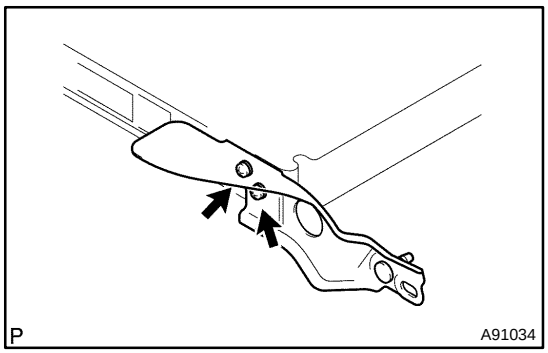

8. REMOVE ECM BRACKET NO.2

(a) Remove the 2 screws and ECM bracket.

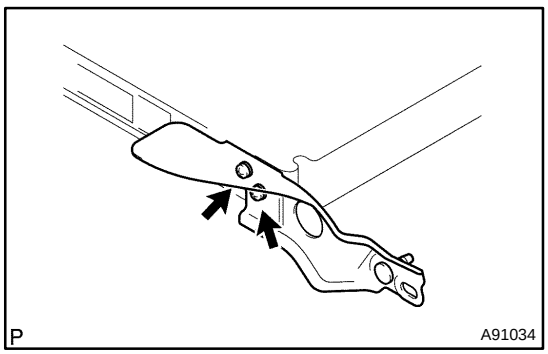

9. INSTALL ECM BRACKET NO.2

(a) Install the ECM bracket with the 2 screws.

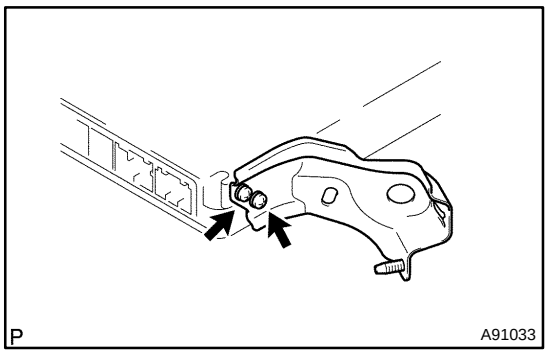

10. INSTALL ECM BRACKET

(a) Install the ECM bracket with the 2 screws.

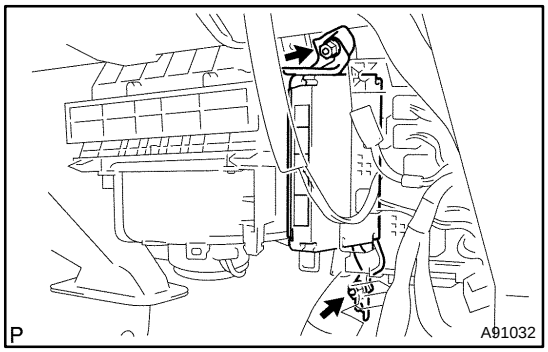

11. INSTALL ECM

(a) Install the 2 wire harness clamps.

(b) Connect the 5 ECM connectors.

(c) Install the ECM with the 2 nuts.

Torque: 5.5 N·m (56 kgf·cm, 49 in.·lbf)

12. INSTALL INSTRUMENT PANEL SUB−ASSY LOWER (See page 71−16)

13. INSTALL INSTRUMENT PANEL UNDER COVER SUB−ASSY NO.1 (See page 71−16)

14. INSTALL COWL SIDE TRIM SUB−ASSY RH (See page 76−22)

15. INSTALL FRONT DOOR SCUFF PLATE RH (See page 76−22)

16. CONNECT BATTERY NEGATIVE TERMINAL

ACCELERATOR PEDAL ASSY (2AZ−FE)

100JY−02

REPLACEMENT

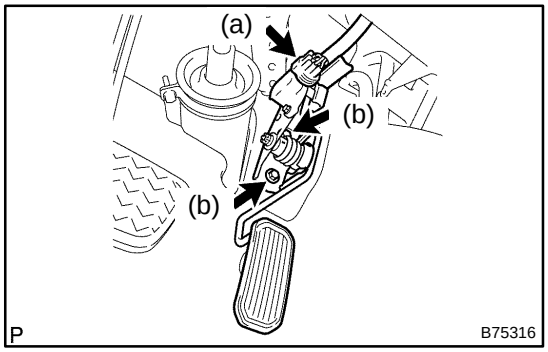

1. REMOVE ACCELERATOR PEDAL ASSY

(a) Disconnect the accelerator position sensor connector.

(b) Remove the 2 bolts and the accelerator pedal.

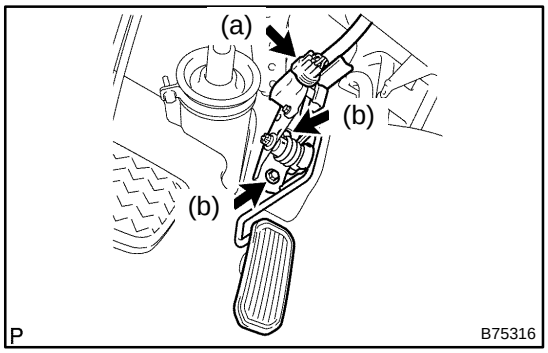

2. INSTALL ACCELERATOR PEDAL ASSY

(a) Connect the accelerator position sensor connector.

(b) Install the accelerator pedal with the 2 bolts.

Torque: 7.5 N·m (76 kgf·cm, 66 in.·lbf)

SFI SYSTEM (1MZ−FE/3MZ−FE)

100FS−05

ON−VEHICLE INSPECTION

1. CHECK THROTTLE BODY

(a) Listen to the throttle control motor operating sounds.
  (1) Turn the ignition switch ON.
  (2) When pressing the accelerator pedal position sensor lever, listen to the running motor. Make sure no friction noise comes from the motor.

If friction noise exists, replace the throttle body.

(b) Inspect the throttle position sensor.
  (1) Connect the hand−held tester or OBD II scan tool to the DLC3.
  (2) Turn the ignition switch ON.
  (3) Check that the MIL is off.
  (4) Under CURRENT DATA, the throttle valve opening percentage (THROTTLE POS) should be within the standard value range below.

  Standard throttle valve opening percentage: 60% or more

If the percentage is less than 60%, replace the throttle body.

NOTICE:

When checking the standard throttle valve opening percentage, the transmission should be in the neutral position.

2. CHECK ACCELERATOR PEDAL POSITION SENSOR

(a) Turn the ignition switch ON. Under CURRENT DATA, the voltage of the throttle position sensor should be within the standard value range below.

  Standard: 0.6 to 1.0 V

If the result is not as specified, replace the accelerator pedal position sensor.

3. CHECK CAMSHAFT TIMING OIL CONTROL VALVE ASSY

(a) Connect the hand−held tester or OBD II scan tool to the DLC3.
(b) Turn the ignition switch ON.
(c) Start the engine and warm it up.
(d) Select the VVT from the ACTIVE TEST menu.
(e) Check the engine speed when the OCV is operated by the hand−held tester.

  Standard:

Condition	Specified Condition
VVT system is OFF (OCV is OFF)	Normal engine speed
VVT system is ON (OCV is ON)	Rough idle or engine stalled

If the result is not as specified, replace the OCV assy.

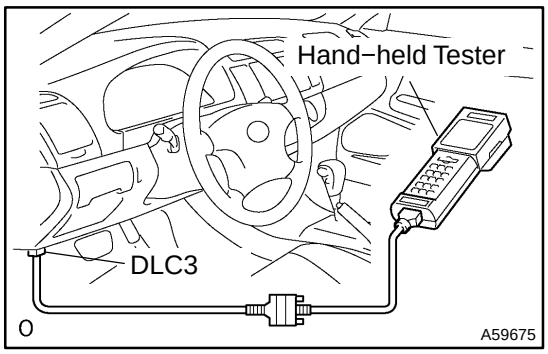

4. CHECK MASS AIR FLOW METER (MAF meter)

NOTICE:

- **Perform the MAF meter inspection by following the procedures below.**
- **Only replace the MAF meter when both the LONG FT#1 value and MAF value in the DATA LIST (with the engine stopped) are not within the normal operating range.**

(a) Perform confirmation driving pattern.

(1) Connect the hand−held tester to the DLC3.
(2) Turn the ignition switch ON.
(3) Turn the tester on.
(4) Clear the DTCs (see page 05−531).
(5) Start the engine and warm it up with all accessory switches off (until the engine coolant temperature is 75 C (167 F) or more).
(6) Drive the vehicle at 31 mph (50 km/h) or more for 3 to 5 minutes. *1
(7) Allow the engine to idle for 2 minutes. *2
(8) Perform steps *1 and *2 at least 3 times.

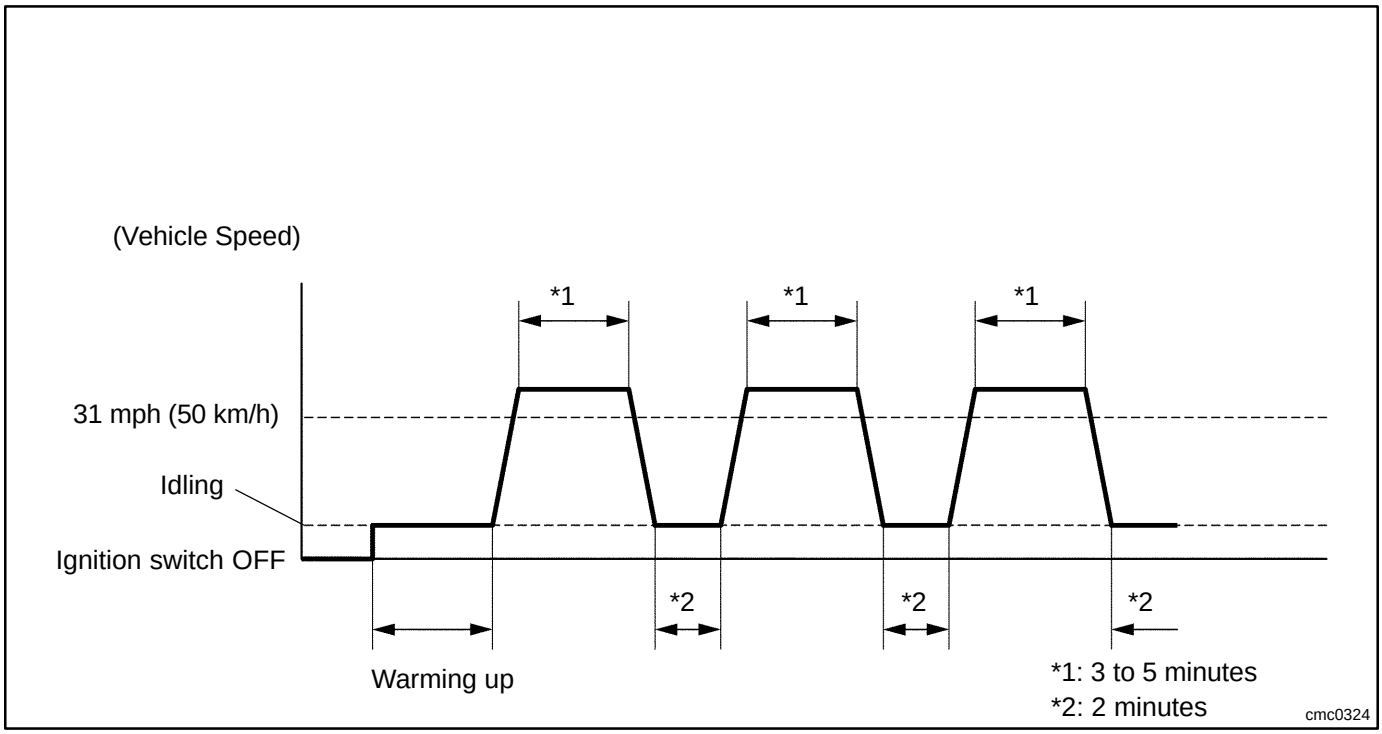

(b) Read value using the hand−held tester (LONG FT#1).
(1) Select the following menu items: DIAGNOSIS / ENHANCED OBD II / DATA LIST / PRIMARY / LONG FT#1.
(2) Read the values displayed on the tester.
Standard value:
Within −15 to +15 %

If the result is not within the specified range, perform the inspection below.

(c) Read value using the hand−held tester (MAF).

NOTICE:

- **Turn off the engine.**
- **Perform the inspection with the vehicle indoors and on a level surface.**
- **Perform the inspection of the MAF meter while it is installed to the air cleaner case (installed to the vehicle).**
- **During the test, do not use the exhaust air duct to perform suction on the exhaust pipe.**

(1) Turn off the engine (do not run the engine).
(2) Turn the ignition switch ON.
(3) Turn the tester on.
(4) Select the following menu items: DIAGNOSIS / ENHANCED OBD II / DATA LIST / PRIMARY / PRIMARY / MAF.
(5) Wait 30 seconds, and read the values on the hand−held tester.

Standard condition:
Less than 0.54 g/s

- If the result is not as specified, replace the MAF meter.
- If the result is within the specified range, inspect the cause of the extremely rich or lean air fuel ratio (see page 05−632).

100JZ−02

INSPECTION

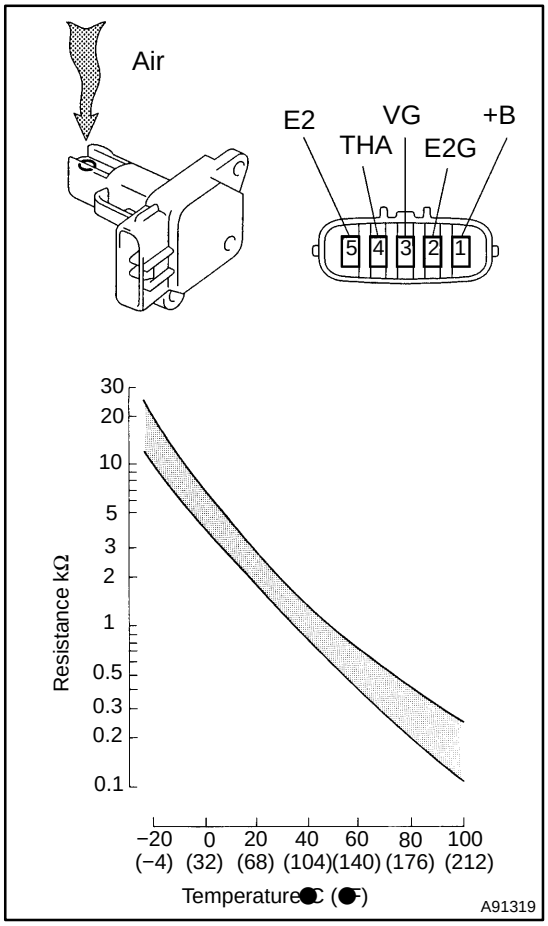

1. INSPECT MASS AIR FLOW METER

(a) Check the output voltage.

(1) Apply battery voltage across terminals 1 (+B) and 2 (E2G).

(2) Using a voltmeter, connect the positive (+) tester probe to terminal VG, and negative (−) tester probe to terminal E2G.

(3) Blow air into the MAF meter, and check that the voltage fluctuates.

(b) Measure the resistance between terminals 4 (THA) and 5 (E2).

Standard:

Condition	Specified Condition
−20°C (−4°F)	13.6 to 18.4 kΩ
20°C (68°F)	2.21 to 2.69 kΩ
60°C (140°F)	0.493 to 0.667 kΩ

If the result is not as specified, replace the MAF meter.

2. INSPECT CAMSHAFT TIMING OIL CONTROL VALVE ASSY

(a) Measure the resistance between the terminals.

Standard: 6.9 to 7.9 Ω at 20°C (68°F)

If the result is not as specified, replace the OCV assy.

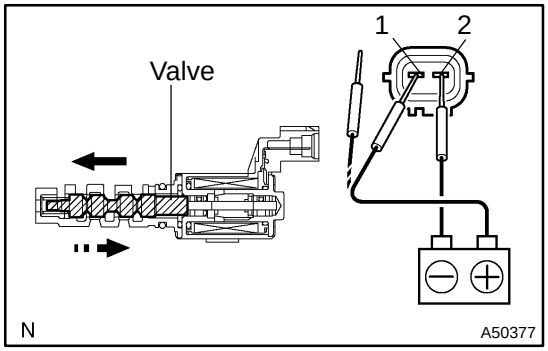

(b) Connect the battery's positive (+) lead to terminal 1 and negative (−) lead to terminal 2, and check the movement of the valve.

NOTICE:

Confirm that the valve moves freely and does not become stuck in any position.

If necessary, replace the OCV assy.

HINT:

If the valve cannot return properly because of foreign matter, a small pressure leak in the advanced direction may occur and a DTC will be output.

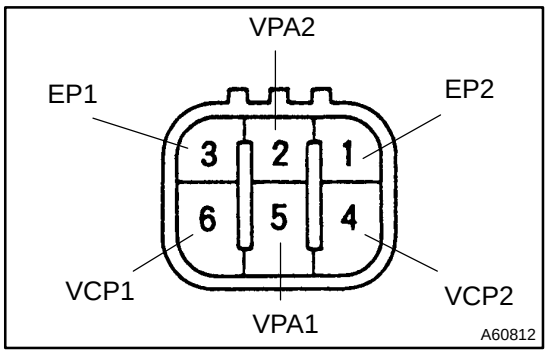

3. INSPECT ACCELERATOR PEDAL ASSY

(a) Measure the resistance between the terminals.

Standard:

Tester Connection	Specified Condition
2 (VPA2) − 3 (EP1)	5.0 kΩ or less
5 (VPA1) − 1 (EP2)	5.0 kΩ or less
6 (VCP1) − 3 (EP1)	2.25 to 4.75 kΩ
4 (VCP2) − 1 (EP2)	2.25 to 4.75 kΩ

If the result is not as specified, replace the pedal assy.

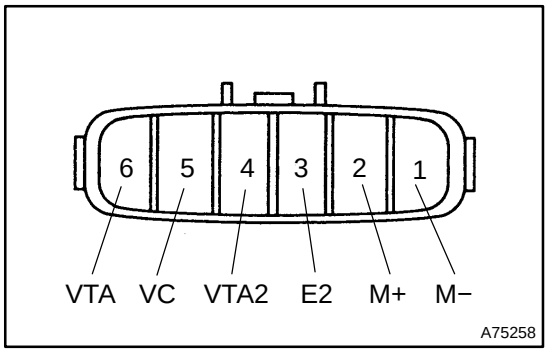

4. INSPECT THROTTLE BODY ASSY

(a) Measure the resistance between the terminals.

Standard:

Tester Connection	Condition	Specified Condition
2 (M+) − 1 (M−)	20°C (68°F)	0.3 to 100 Ω
5 (VC) − 3 (E2)	20°C (68°F)	2.0 to 4.0 kΩ

If the result is not as specified, replace the throttle body assy.

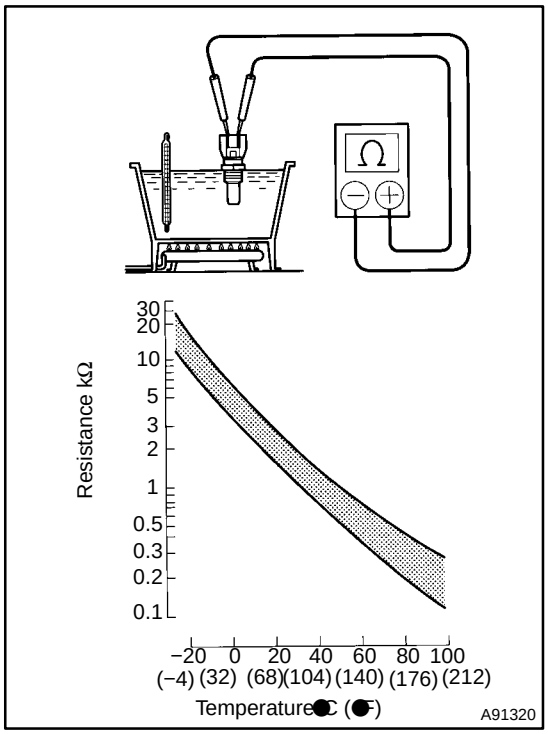

5. INSPECT ENGINE COOLANT TEMPERATURE SENSOR

(a) Measure the resistance between each terminal.

Standard:

Condition	Specified Condition
Approx. 20°C (68°F)	2.32 to 2.59 kΩ
Approx. 80°C (176°F)	0.310 to 0.326 kΩ

If the result is not as specified, replace the sensor.

NOTICE:

If checking the engine coolant temperature sensor in the water, keep the terminals dry. After the check, wipe the sensor dry.

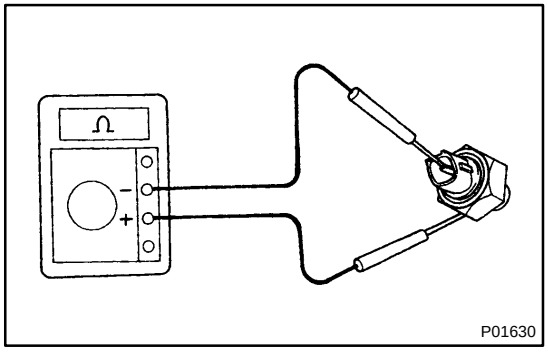

6. INSPECT KNOCK SENSOR (1MZ−FE ENGINE TYPE)

(a) Using an ohmmeter, measure the resistance between the terminal and body.

Standard: 10 kΩ or higher

HINT:

If the result is not as specified, replace the sensor.

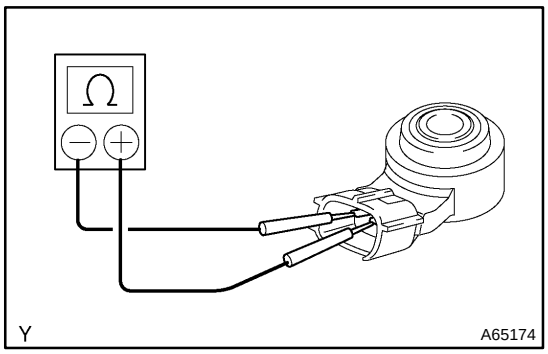

7. INSPECT KNOCK SENSOR (3MZ−FE ENGINE TYPE)

(a) Using an ohmmeter, measure the resistance between the terminals.

Standard: 120 to 280 kΩ at 20°C (68°F)

HINT:

If the result is not as specified, replace the sensor.

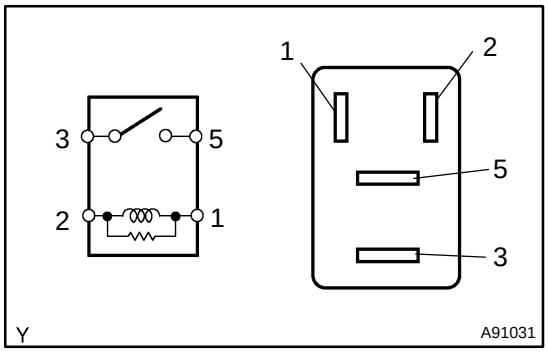

8. INSPECT RELAY (Marking: EFI, C/OPN)

(a) Using an ohmmeter, measure the resistance of the relay.

Standard:

Tester Connection	Specified Condition
3 − 5	10 kΩ or higher
3 − 5	Below 1Ω (when battery voltage is applied to terminals 1 and 2)

If the result is not as specified, replace the relay.

THROTTLE BODY ASSY (1MZ−FE/3MZ−FE)

100IU−04

COMPONENTS

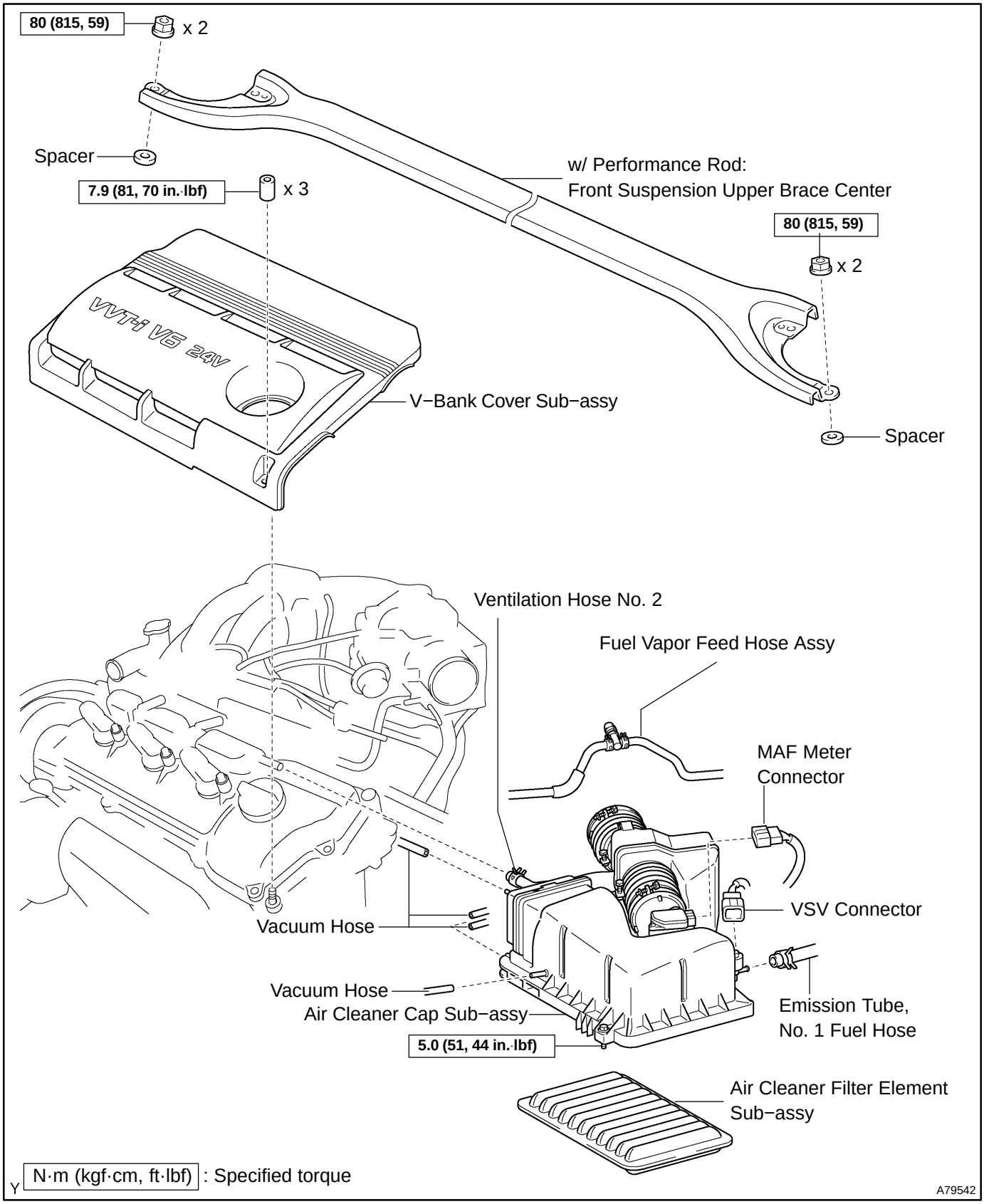

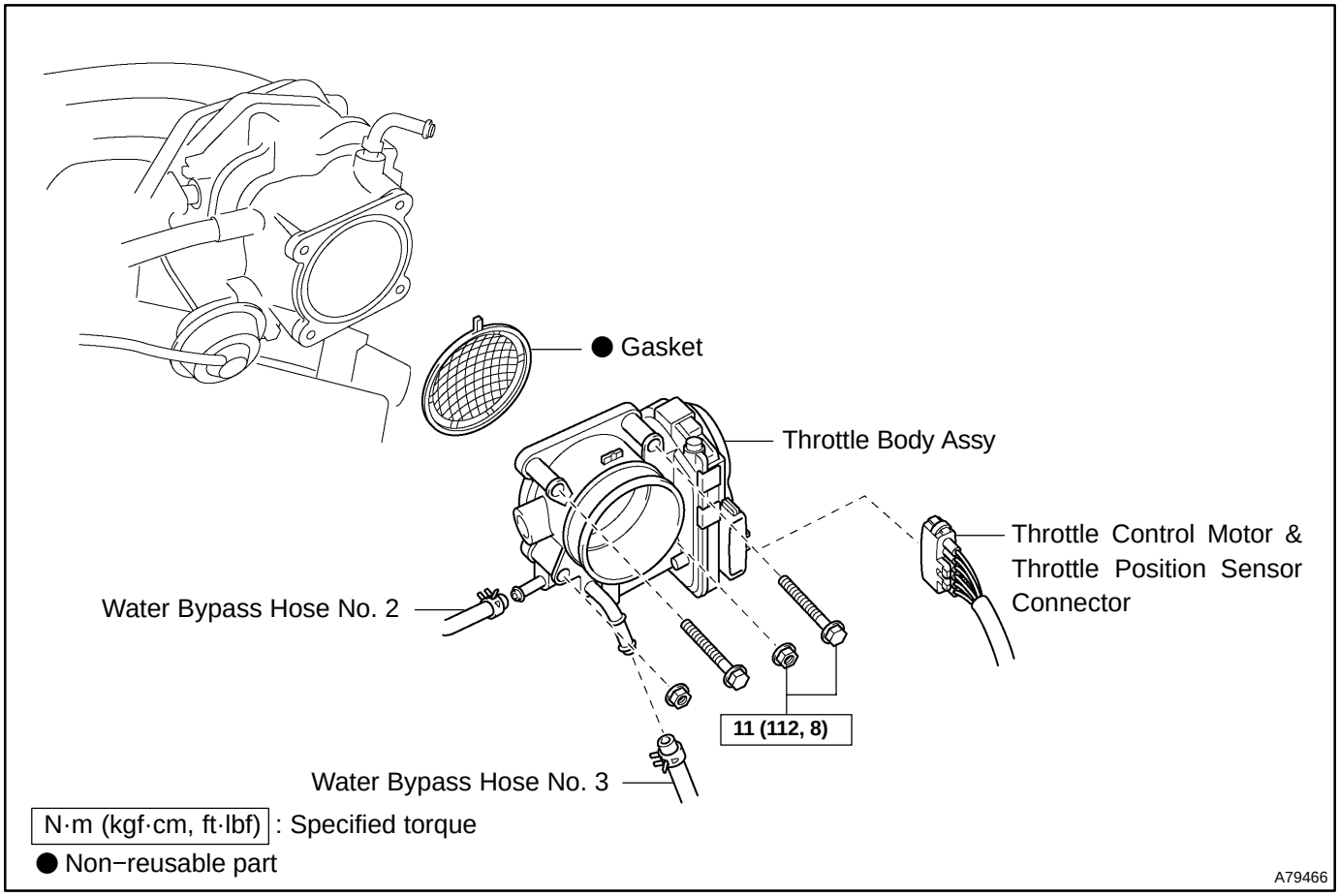
● Gasket
Throttle Body Assy
Throttle Control Motor & Throttle Position Sensor Connector
Water Bypass Hose No. 2
11 (112, 8)
Water Bypass Hose No. 3
N·m (kgf·cm, ft·lbf) : Specified torque
● Non−reusable part
A79466

100K0−02

REPLACEMENT

1. DRAIN ENGINE COOLANT (See page 16−27)

2. w/ Perfomance rod:
REMOVE FRONT SUSPENSION UPPER BRACE CENTER

(a) Remove the 2 nuts and upper brace.

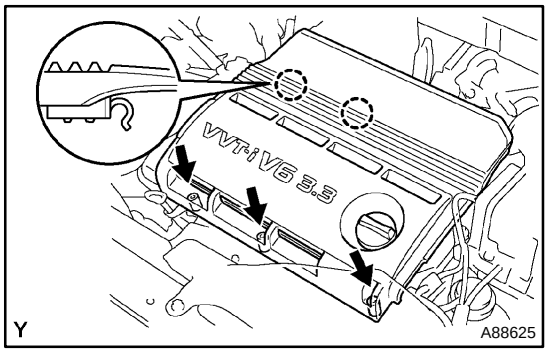

3. REMOVE V−BANK COVER SUB−ASSY

(a) Using a socket hexagon wrench 5, remove the 3 nuts.

(b) Remove the V−bank cover.

4. REMOVE AIR CLEANER CAP SUB−ASSY

(a) Disconnet the MAF meter connector.

(b) Disconnect the VSV connector.

(c) Remove the ventilation hose No. 2.

(d) Disconnect the emission tube No. 1 fuel hose.

(e) Disconnec the vacuum hoses.

(f) Remove the fuel vapor feed hose from the 2 hose clamps.

(g) Loosen the air cleaner hose clamp bolt, and then remove the intake air resonator.

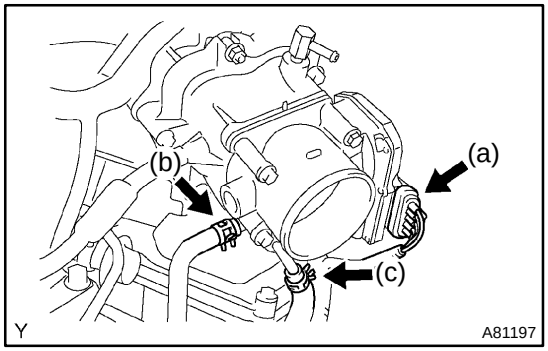

5. REMOVE THROTTLE BODY ASSY

(a) Disconnect the throttle control motor & throttle position sensor connector.

(b) Disconnect the water bypass hose No. 2.

(c) Disconnect the water bypass hose No. 3.

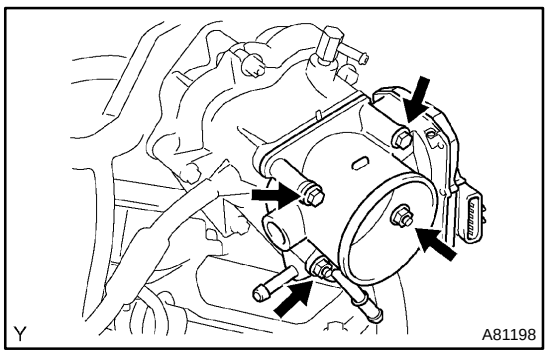

(d) Remove the 2 bolts, 2 nuts and throttle body.

(e) Remove the gasket.

6. INSTALL THROTTLE BODY ASSY

(a) Install a new gasket to the intake air connector.

(b) Install the throttle body with the 2 bolts and 2 nuts.

Torque: 11 N·m (112 kgf·cm, 8 ft·lbf)

(c) Connect the water bypass hose No. 3.

(d) Connect the water bypass hose No. 2.

(e) Connect the throttle control motor & throttle position sensor connector.

7. INSTALL AIR CLEANER CAP SUB−ASSY

(a) Install the air cleaner hose (w/ air cleaner cap) to the throttle body.

(b) Tighten the air cleaner hose clamp bolt.

(c) Install the fuel vapor feed hose to the 2 hose clamps.

(d) Connect the vacuum hoses.

(e) Connect the emission tube No. 1 fuel hose.

(f) Install the ventilation hose No. 2.

(g) Connect the VSV connector.

(h) Connect the MAF meter connector.

8. ADD ENGINE COOLANT (See page 16−27)

9. CHECK FOR ENGINE COOLANT LEAKS (See page 16−21)

10. INSTALL V−BANK COVER SUB−ASSY

(a) Fit the 2 retainers and install the V−bank cover.

(b) Using a socket hexagon wrench 5, tighten the 3 nuts.

Torque: 7.9 N·m (81 kgf·cm, 70 in.·lbf)

11. w/ Performance Rod:
INSTALL FRONT SUSPENSION UPPER BRACE CENTER

(a) Install the upper brace with the 2 nuts.

Torque: 80 N·m (815 kgf·cm, 59 ft·lbf)

KNOCK SENSOR (1MZ−FE/3MZ−FE)

100K1−02

REPLACEMENT

1. **DISCHARGE FUEL SYSTEM PRESSURE (See page11−26)**
2. **DRAIN ENGINE COOLANT (See page 16−27)**
3. **REMOVE V−BANK COVER SUB−ASSY (See page 10−18)**
4. **REMOVE AIR CLEANER CAP SUB−ASSY (See page 10−18)**
5. **REMOVE EMISSION CONTROL VALVE SET (See page 11−38)**
6. **REMOVE INTAKE AIR SURGE TANK (See page 11−38)**

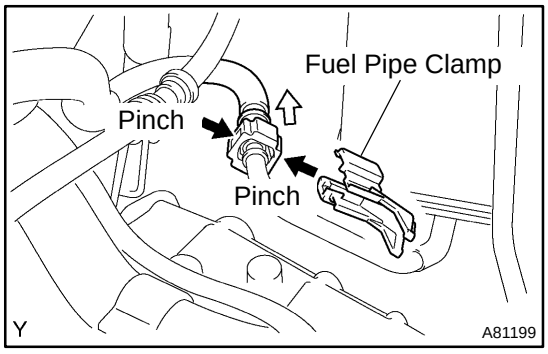

7. REMOVE INTAKE MANIFOLD

(a) Disconnect the fuel pipe No. 1.
  (1) Remove the fuel pipe clamp.
  (2) Pinch the tube connector and then pull out the fuel pipe No. 1.

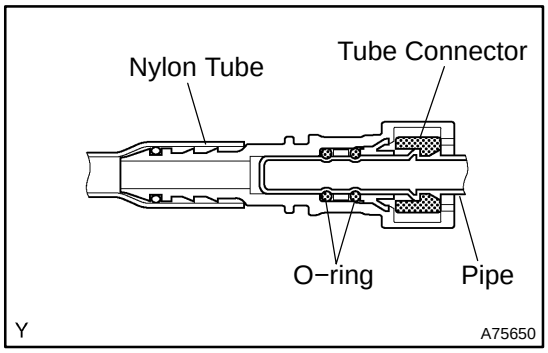

NOTICE:

- **Check the connector for dirt, mud or other contamination. Clean if necessary.**
- **Be sure to keep the tube connector, pipe and O−ring clean. They can become contaminated easily.**
- **Do not use tools when disconnecting the fuel pipe.**
- **Do not bend or twist the nylon tube. Protect the connector by covering it with a vinyl or plastic bag.**
- **When the pipe and the connector are stuck, push and pull the connector to release it. Then pull the connector out carefully.**

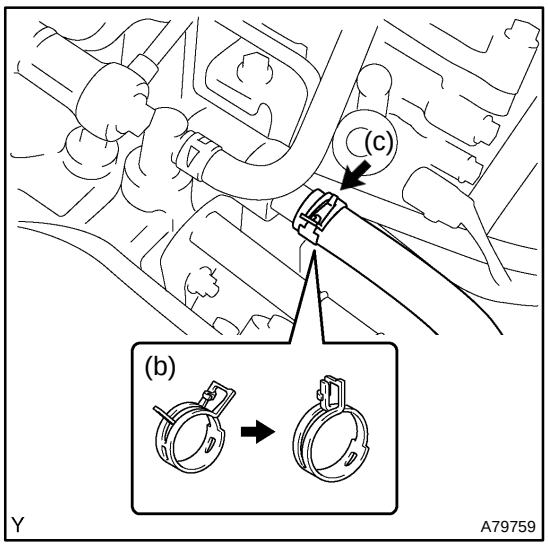

(b) Lock the hose clamp, as shown in the illustration.
(c) Disconnect the heater inlet water hose.

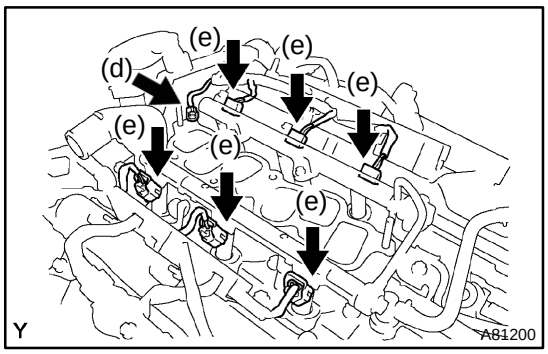

(d) Remove the nut and disconnect the ground cable.
(e) Disconnect the 6 fuel injector connectors.

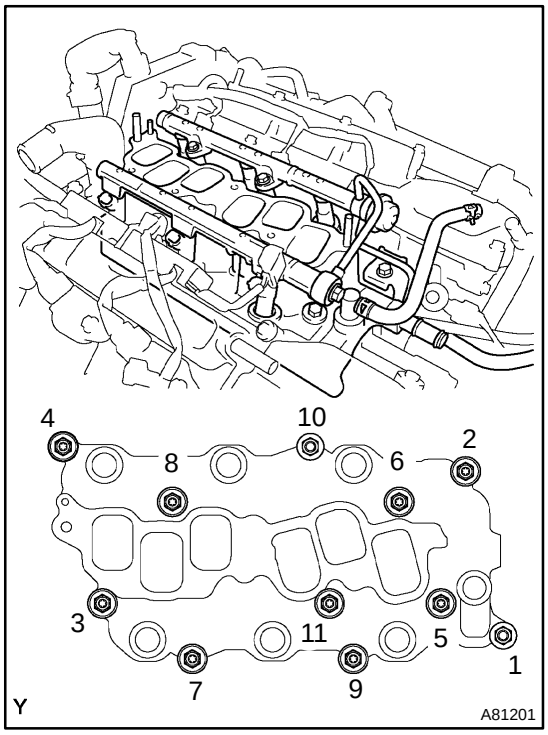

(f) Loosen and remove the intake manifold's 9 bolts and 2 nuts little by little in the numerical order shown in the illustration.
(g) Remove the intake manifold.

NOTICE:
Fully removing each bolt and nut one by one may damage the intake manifold, bolts and nuts.

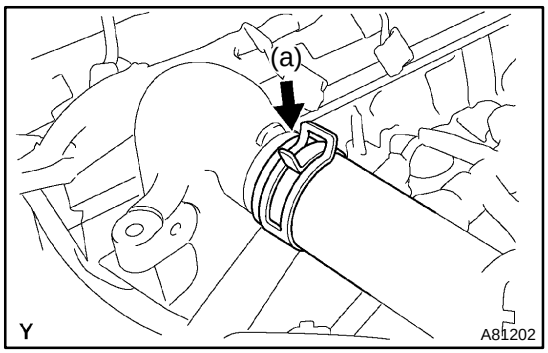

8. REMOVE WATER OUTLET

(a) Disconnect the radiator hose inlet.

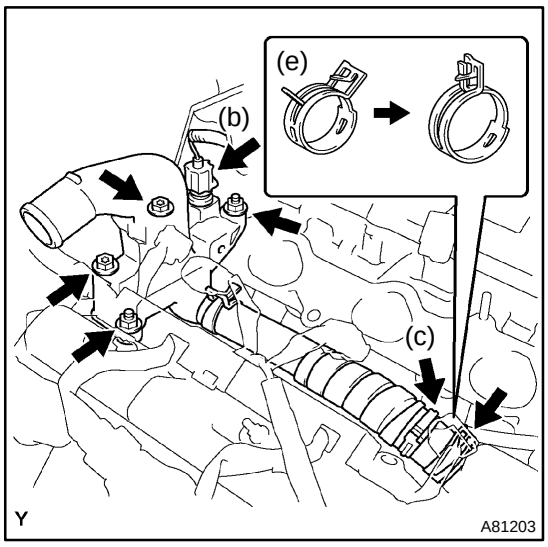

(b) Disconnect the ECT sensor connector.
(c) Remove the clamp.
(d) Remove the 2 bolts, 2 nuts and 2 washers.
(e) Lock the hose clamp as shown in the illustration. Then remove the water outlet together with the water bypass hose No. 1.
(f) Remove the 2 gaskets from the 2 cylinder heads.

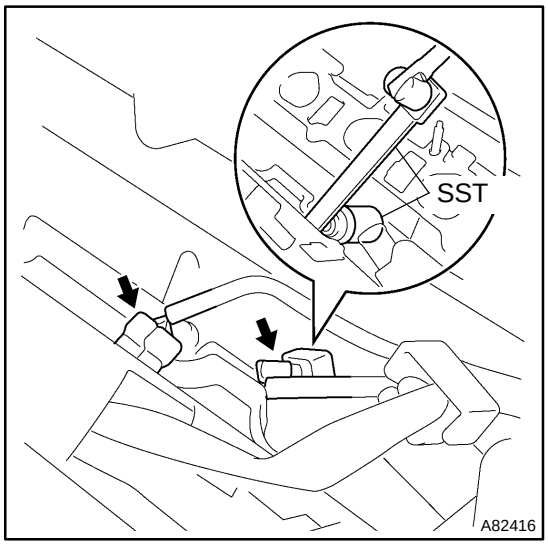

9. REMOVE KNOCK SENSOR (1MZ−FE ENGINE TYPE)

(a) Disconnect the 2 knock sensor connectors.
(b) Using SST, remove the 2 knock sensors.
SST 09249−63010, 09816−30010

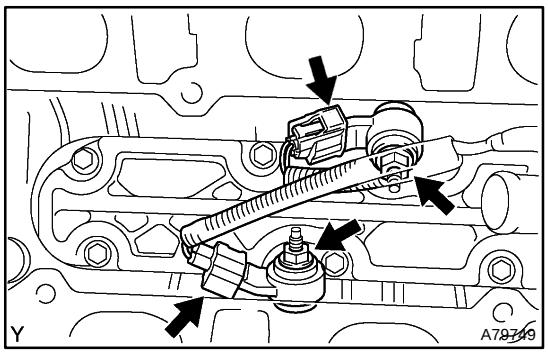

10. REMOVE KNOCK SENSOR (3MZ−FE ENGINE TYPE)

(a) Disconnect the 2 knock sensor connectors.
(b) Remove the 2 nuts and 2 knock sensors.

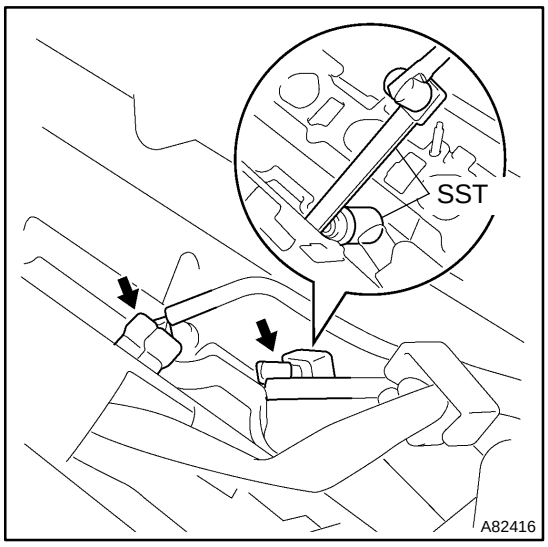

11. INSTALL KNOCK SENSOR (1MZ−FE ENGINE TYPE)

(a) Using SST, install the 2 knock sensors.
SST 09249−63010, 09816−30010
Torque: 39 N·m (398 kgf·cm, 29 ft·lbf)

(b) Connect the 2 knock sensors.

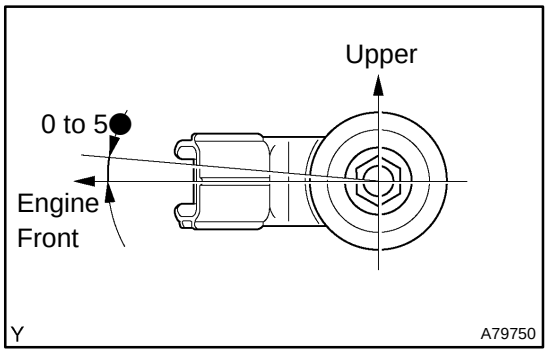

12. INSTALL KNOCK SENSOR (3MZ−FE ENGINE TYPE)

(a) Install the 2 knock sensors with the 2 nuts, as shown in the illustration.
Torque: 20 N·m (199 kgf·cm, 14 ft·lbf)

(b) Connect the 2 knock sensor connectors.

13. INSTALL WATER OUTLET

(a) Install 2 new gaskets to the 2 cylinder heads.

(b) Install the water outlet together with the water bypass hose No. 1 and unlock the hose clamp.

(c) Tighten the 2 bolts, 2 nuts and 2 washers.
Torque: 15 N·m (153 kgf·cm, 11 ft·lbf)

(d) Install the clamp.

(e) Connect the ECT sensor connector.

(f) Connect the radiator hose inlet.

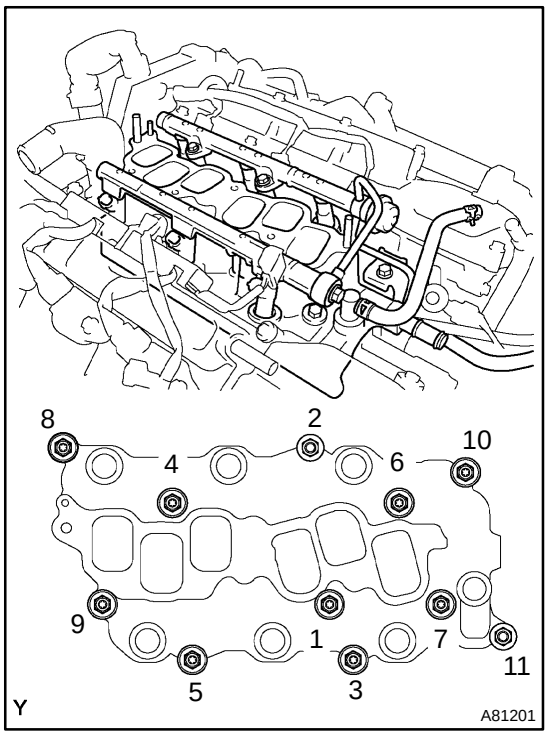

14. INSTALL INTAKE MANIFOLD

(a) Tighten the intake manifolds's 9 bolts and 2 nuts little by little in the numerical order shown in the illustration.
Torque: 15 N·m (153 kgf·cm, 11 ft·lbf)

NOTICE:
In this case, fully tightening one of these bolts or nuts without partially tightening the other bolts or nuts in the group may damage the intake manifold, bolts and nuts.

(b) Retighten the water outlet mounting bolts and nuts.
Torque: 15 N·m (153 kgf·cm, 11 ft·lbf)

(c) Install the ground cable with the nut.
Torque: 8.4 N·m (86 kgf·cm, 74 in.·lbf)

(d) Connect the heater inlet water hose.

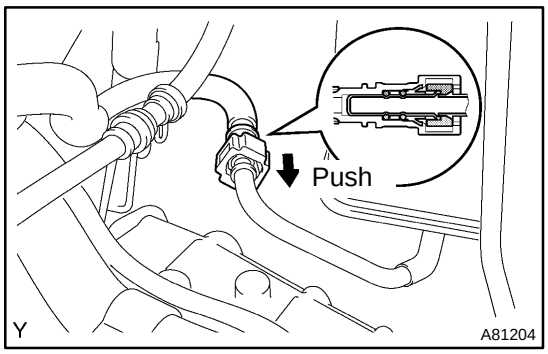

(e) Connect the fuel pipe No. 1.
(1) Push the quick connector into the pipe until it makes ”click” sound.

NOTICE:

- **Check if there is any damage or contamination on the connected part.**
- **After connecting, confirm that the connector and pipe are securely connected by trying to pull them apart.**

(2) Install the fuel pipe clamp.

15. INSTALL INTAKE AIR SURGE TANK (See page 11−38)
16. INSTALL EMISSION CONTROL VALVE SET (See page 11−38)
17. INSTALL AIR CLEANER CAP SUB−ASSY (See page 10−18)
18. CHECK CONNECTION OF VACUUM HOSE
19. ADD ENGINE COOLANT (See page 16−27)
20. CHECK FOR ENGINE COOLANT LEAKS (See page 16−21)
21. CHECK FOR FUEL LEAKS (See page 11−29)
22. INSTALL V−BANK COVER SUB−ASSY (See page 10−18)

ECM (1MZ−FE/3MZ−FE)

100K2−02

REPLACEMENT

1. **DISCONNECT BATTERY NEGATIVE TERMINAL**
2. **REMOVE FRONT DOOR SCUFF PLATE RH (See page 76−22)**
3. **REMOVE COWL SIDE TRIM SUB−ASSY RH (See page 76−22)**
4. **REMOVE INSTRUMENT PANEL UNDER COVER SUB−ASSY NO.1 (See page 71−16)**
5. **REMOVE INSTRUMENT PANEL SUB−ASSY LOWER (See page 71−16)**

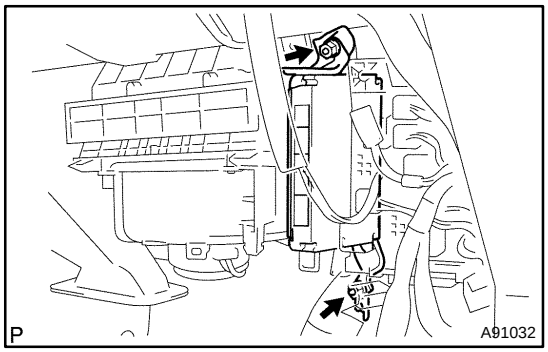

6. REMOVE ECM

(a) Remove the 2 wire harness clamps.
(b) Disconnect the 5 ECM connectors.
(c) Remove the 2 nuts and ECM.

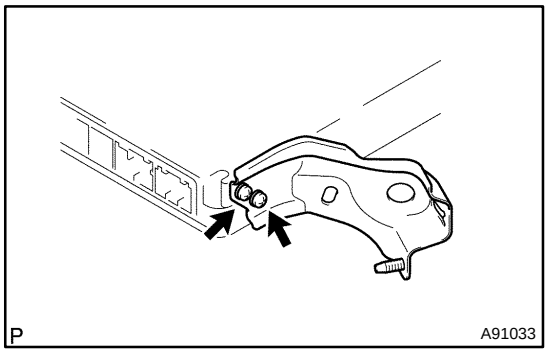

7. REMOVE ECM BRACKET

(a) Remove the 2 screws and ECM bracket.

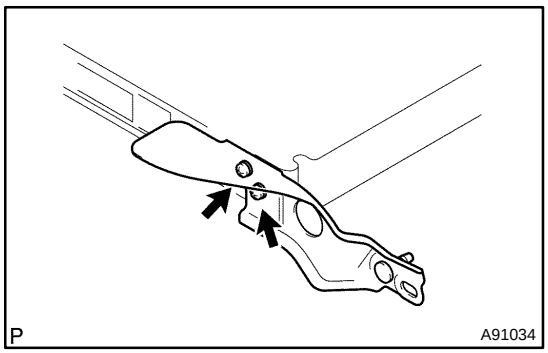

8. REMOVE ECM BRACKET NO.2

(a) Remove the 2 screws and ECM bracket.

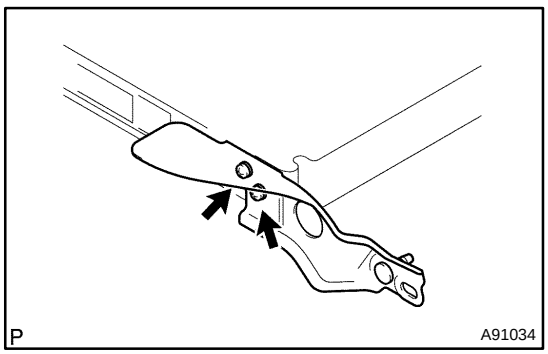

9. INSTALL ECM BRACKET NO.2

(a) Install the ECM bracket with the 2 screws.

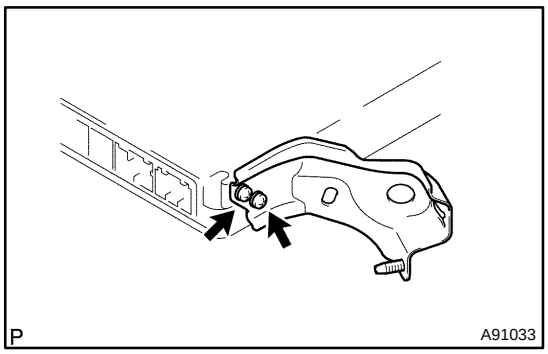

10. INSTALL ECM BRACKET

(a) Install the ECM bracket with the 2 screws.

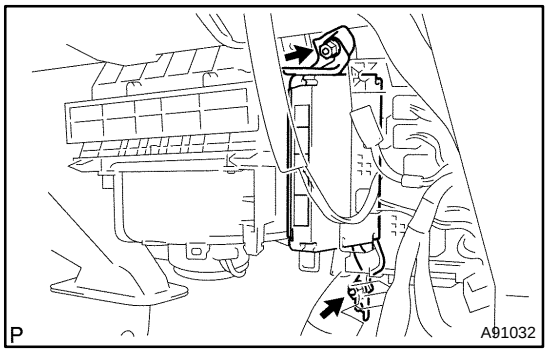

11. INSTALL ECM

(a) Install the 2 wire harness clamps.

(b) Connect the 5 ECM connectors.

(c) Install the ECM with the 2 nuts.

Torque: 5.5 N·m (56 kgf·cm, 49 in.·lbf)

12. INSTALL INSTRUMENT PANEL SUB−ASSY LOWER (See page 71−16)

13. INSTALL INSTRUMENT PANEL UNDER COVER SUB−ASSY NO.1 (See page 71−16)

14. INSTALL COWL SIDE TRIM SUB−ASSY RH (See page 76−22)

15. INSTALL FRONT DOOR SCUFF PLATE RH (See page 76−22)

16. CONNECT BATTERY NEGATIVE TERMINAL

ACCELERATOR PEDAL ASSY (1MZ−FE/3MZ−FE)

100K3−02

REPLACEMENT

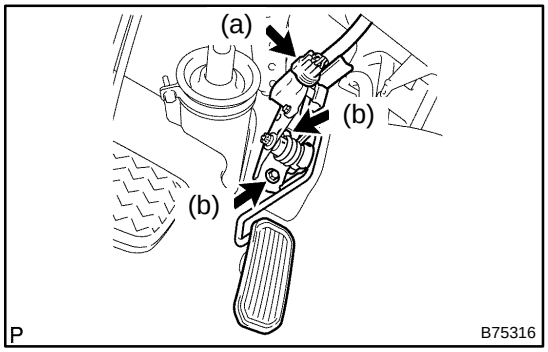

1. REMOVE ACCELERATOR PEDAL ASSY

(a) Disconnect the accelerator position sensor connector.

(b) Remove the 2 bolts and the accelerator pedal.

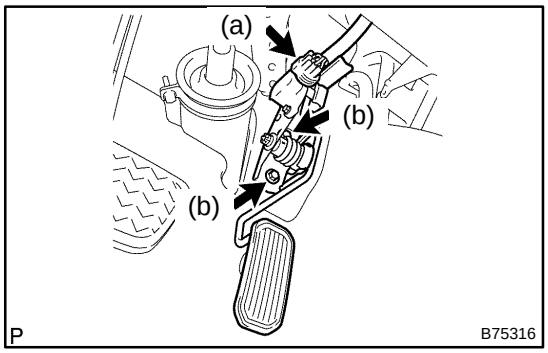

2. INSTALL ACCELERATOR PEDAL ASSY

(a) Connect the accelerator position sensor connector.

(b) Install the accelerator pedal with the 2 bolts.

Torque: 7.5 N·m (76 kgf·cm, 66 in.·lbf)

FUEL SYSTEM (2AZ−FE)(From July, 2003)

110XE−02

PRECAUTION

1. PRECAUTION

(a) Before working on the fuel system, disconnect the negative (−) terminal cable from the battery.
(b) Do not smoke or be near an open flame when working on the fuel system.
(c) Keep gasoline away from rubber or leather parts.

2. DISCHARGE FUEL SYSTEM PRESSURE

CAUTION:

- **Do not disconnect any part of the fuel system until you have discharged the fuel system pressure.**
- **Even after discharging the fuel pressure, place a shop rag over fittings as you separate them to reduce risk of fuel spray on yourself or in the engine compartment.**

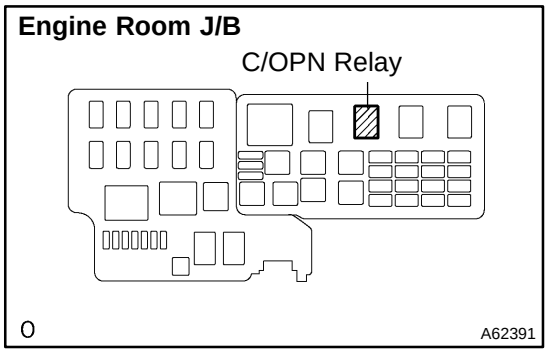

(a) Remove the C/OPN relay from the engine room J/B.
(b) Start the engine. After the engine has stopped, turn the ignition switch OFF.

HINT:

There is a case that DTC P0171 (system to lean) is output.

(c) Check that the engine does not start.
(d) Remove the fuel tank cap, and let the air out of the fuel tank.
(e) Disconnect the negative (−) terminal cable from the battery.
(f) Reinstall the C/OPN relay.

3. FUEL SYSTEM

(a) When disconnecting the high fuel pressure line, a large amount of gasoline will spill out, so observe these procedures.
  (1) Try to prevent gasoline from spilling out.
  (2) Disconnect the fuel pump tube (see page 11−14).
  (3) Drain the fuel remained inside the fuel pump tube.

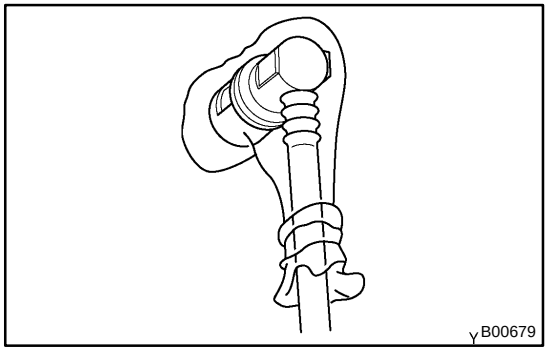

  (4) To protect the disconnected fuel pump tube from damage and contamination, cover it with a vinyl bag.
  (5) Put a container under the connection.

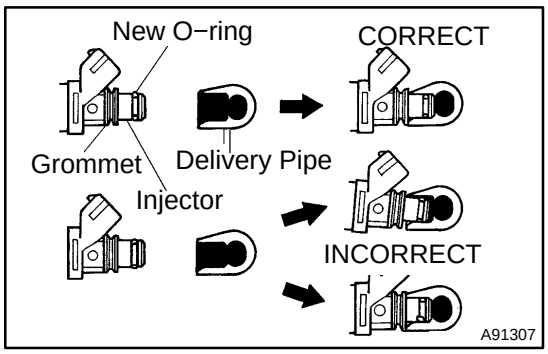

(b) Observe these precautions when removing and installing the injector.

(1) Never reuse the O−rings.

(2) When placing a new O−ring on the injector, take care not to damage it in any way.

(3) Coat a new O−rings with grease or gasoline before installing. Never use engine, gear or brake oil.

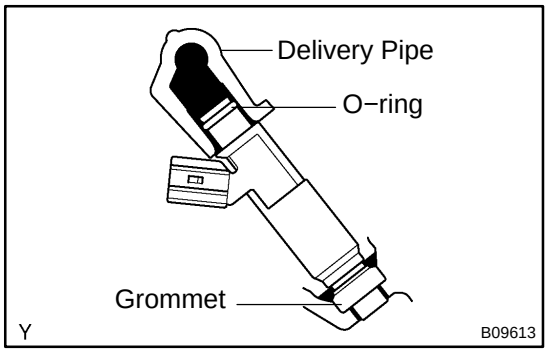

(c) Install the injector to the delivery pipe and cylinder head, as shown in the illustration. Before installing the injector, be sure to apply grease or gasoline on the place where the delivery pipe touches the O−ring of the injector.

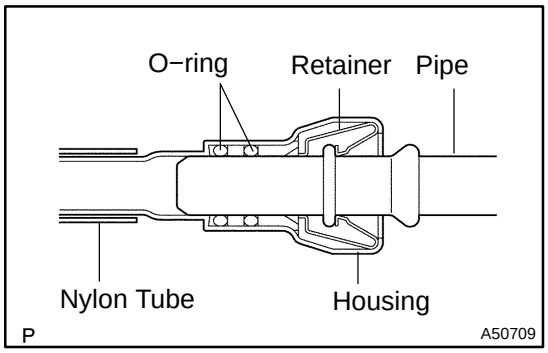

(d) Observe these precautions when disconnecting the fuel delivery pipe.

HINT:

The structure of the metallic connector is shown as left.

(1) Remove the fuel pipe clamp No.2.

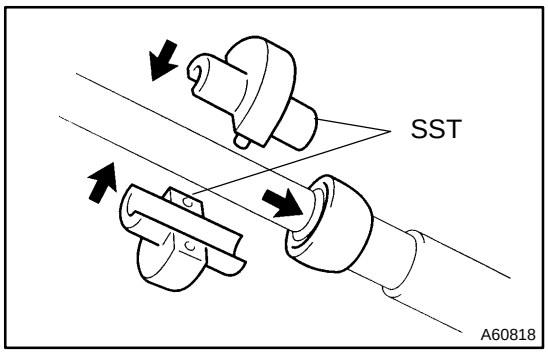

(2) Find the metallic connector of the fuel tube assembly, pull vehicle's and hold it as it is.

(3) Assemble SST to the connection as shown.

SST 09268−21010

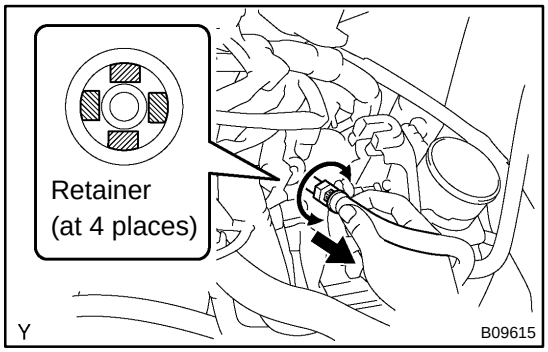

(4) Turn SST, align the retainers inside the connector with SST chamfered parts and insert SST into the connector.

(5) Slide SST and the connector together towards the fuel tube assembly.

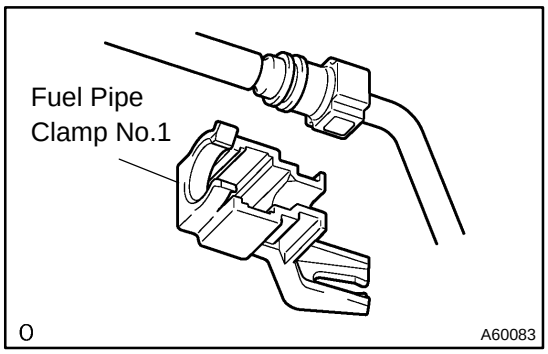

(e) Observe these following precautions when disconnecting the fuel tube connector (quick type).
(1) Remove the fuel pipe clamp No.1.
(2) Check for dirt or mud on the pipe and around the connector before disconnection. Clean if nesessary.

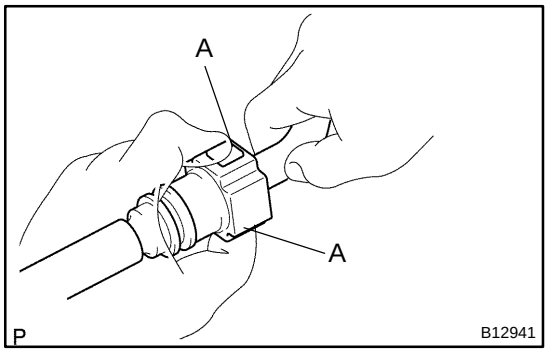

(3) Disconnect the connector from the hose while pinching part A with fingers as shown in the illustration.

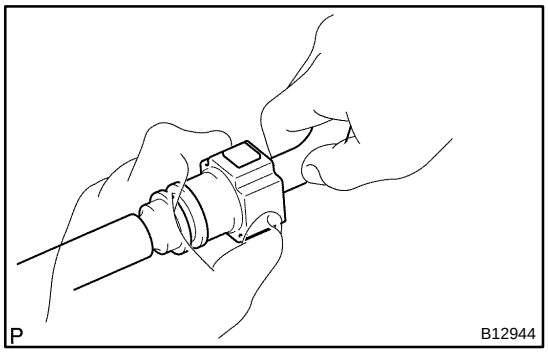

(4) If the connector and the pipe are stuck. pinch the fuel pipe, push and pull the connector to disconnect and pull it out. Do no use any tools.
(5) Inspect for dirt or mud on the seal surface of the disconnected pipe. Clean if necessary.

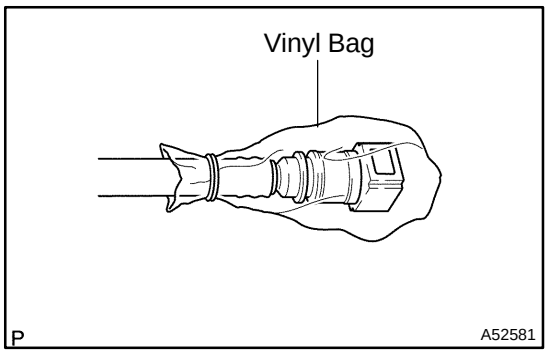

(6) To protect the disconnected pipe and connector from damage and contamination, cover it with a vinyl bag.

4. CHECK FUEL LEAK

(a) Check that there are no fuel leaks after doing maintenance anywhere on the fuel system (see page 11−4).

ON−VEHICLE INSPECTION

1. CHECK FUEL PUMP OPERATION AND FUEL LEAKS

(a) When using the hand−held tester:
Check fuel pump operation.
(1) Connect the hand−held tester to the DLC3.
(2) Turn the ignition switch ON and push the hand−held tester main switch ON.

NOTICE:

Do not start the engine.

(3) Select the ACTIVE TEST mode on the hand−held tester.
(4) If you need help to select active test on the hand−held tester, refer to the hand−held tester is instruction manual.
(5) Turn the ignition switch OFF.
(6) Disconnect the hand−held tester from the DLC3.

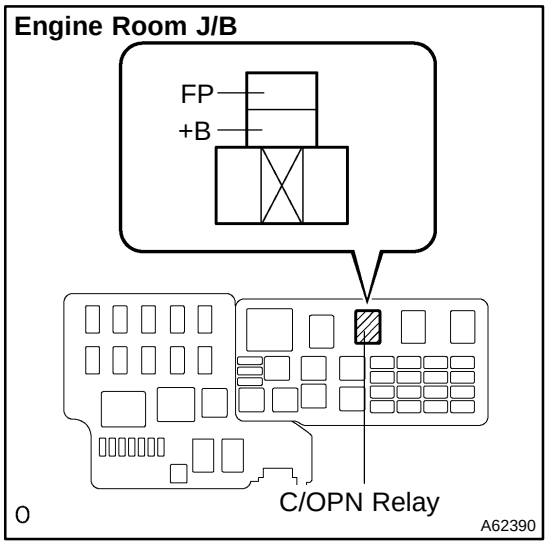

(b) When not using the hand−held tester:
Check fuel pump operation.
(1) Remove the C/OPN relay from the engine room J/B.
(2) Using a service wire, connect terminals FP and +B of the engine room J/B.

NOTICE:

Pay close attention to the terminal connecting position to avoid a malfunction.

(3) Turn the ignition switch ON, and check that the fuel pump operates.

NOTICE:

Do not start the engine.

(c) Check that there are no fuel leaks after doing maintenance anywhere on the fuel system.
(d) Turn the ignition switch OFF.
(e) Remove the service wire from the engine room J/B.
(f) Install the C/OPN relay to the engine room J/B.

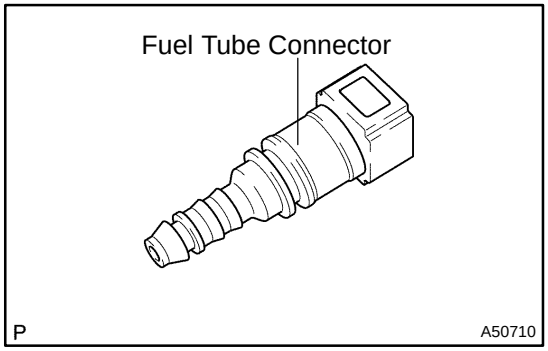

2. CHECK FUEL PRESSURE

(a) Check that the battery positive voltage is above 12 V.
(b) Disconnect the negative (−) terminal cable from the battery.
(c) Purchase a new fuel tube and take out the fuel tube connector from its pipe.
Fuel tube: Part No. 23801−20190

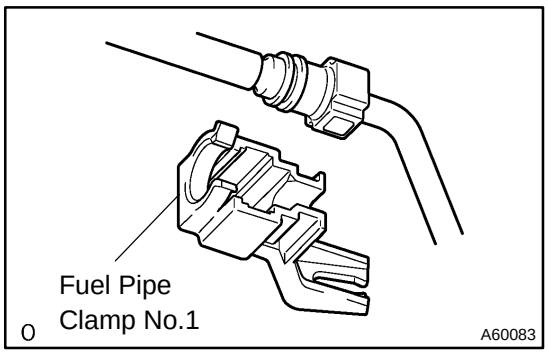

(d) Remove the fuel pipe clamp from the fuel tube connector.

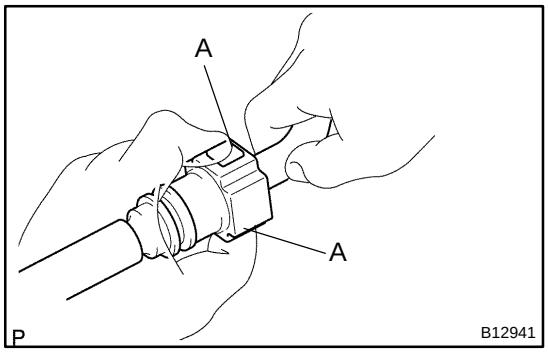

(e) Disconnect the fuel tube connector from the fuel pipe by pinching part A with your fingers, as shown in the illustration.

CAUTION:

- **Always read the precautions (see page 11−1) before disconnecting the fuel tube connector (quick type).**
- **The fuel pipe line may spray fuel as a result of retained pressure that remains in it. Do not allow fuel to be sprayed in the engine compartment.**

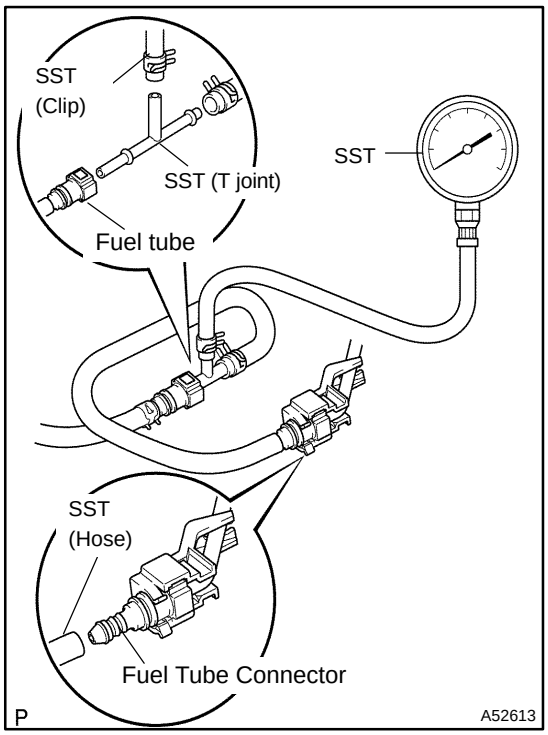

(f) Install SST (pressure gauge) and fuel tube connecter using SST as shown in the illustration.
SST 09268−41047 (90467−13001, 95336−08070), 09268−45014 (09268−41200, 09268−41220, 09268−41250)

(g) Wipe off any gasoline.

(h) Reconnect the negative (−) battery cable.

(i) When using hand−held tester:
Operate the fuel pump (see step 1 (a)).

(j) When not using hand−held tester:
Operate the fuel pump (see step 1 (b)).

(k) Measure the fuel pressure.
Fuel pressure:
304 to 343 kPa (3.1 to 3.5 kgf/cm^2, 44 to 50 psi)

If the pressure is high, replace the fuel pressure regulator.
If the pressure is low, check the fuel hoses and connections, fuel pump, fuel filter and fuel pressure regulator.

(l) Start the engine.

(m) Measure the fuel pressure at idle.
Fuel pressure:
304 to 343 kPa (3.1 to 3.5 kgf/cm^2, 44 to 50 psi)

(n) Stop the engine.

(o) Check that the fuel pressure remains as specified for 5 minutes after the engine has stopped.
Fuel pressure: 147 kPa (1.5 kgf/cm^2, 21psi)

If the pressure is not as specified, check the fuel pump, pressure regulator and/or injectors.

(p) After checking the fuel pressure, disconnect the negative (−) battery cable and carefully remove SST and fuel tube connector to prevent gasoline from spraying.

(q) Reconnect the fuel inlet tube (fuel tube connector).

CAUTION:
Always read the precautions (see page 11−1) before connecting the fuel tube connector (quick type).

INSPECTION

1. FUEL INJECTOR ASSY

(a) Check the injector resistance.

(1) Measure the resistance between the terminals.

Standard: 11.6 to 12.4 Ω at 20°C (68°F)

If the result is not as specified, replace the injector.

(b) Check the injector injection.

CAUTION:

- **This test involves high−pressure fuel and electricity.**
- **Take every precaution regarding safe handling of both the fuel and the electricity.**
- **Perform this test in a safe area, and avoid any sparks or flame.**
- **Do not smoke.**

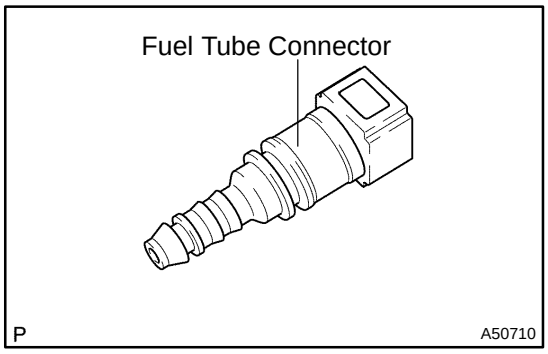

(1) Purchase a new fuel tube and take out the fuel tube connector from its pipe.
Part No. 23801−20190

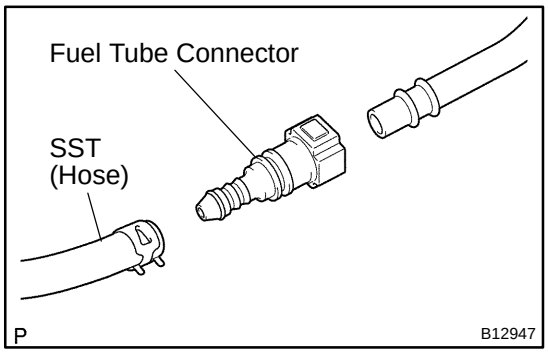

(2) Connect SST and fuel tube connector to the fuel pipe.

SST 09268−41047

CAUTION:

Always read the precautions (see page 11−1) before connecting the fuel tube connector (quick type).

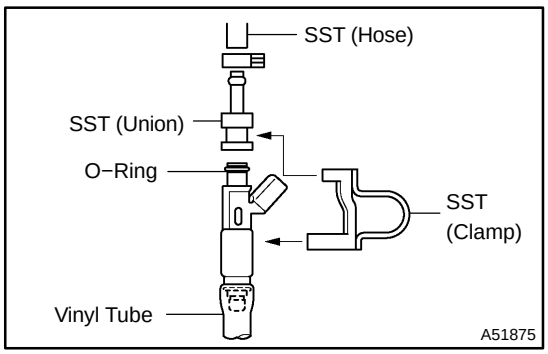

(3) Install the O−ring to the injector.

(4) Connect SST (union and hose) to the injector, and hold the injector and union with SST (clamp).

SST 09268−41047 (09268−41110, 09268−41300)

(5) Put the injector into a graduated cylinder.

HINT:

Install a suitable vinyl tube onto the injector to contain the gasoline spray.

(6) Operate the fuel pump (see page 11−14).

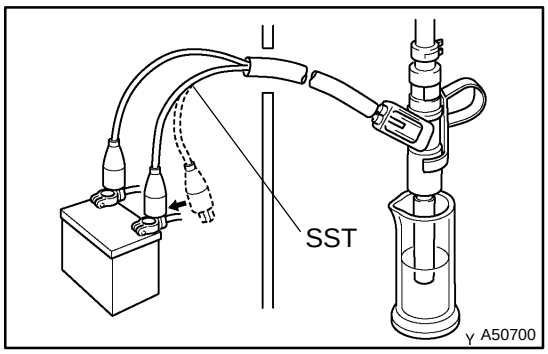

(7) Connect SST (wire) to the injector and the battery for 15 seconds, and measure the injection volume with a graduated cylinder. Test each injector 2 or 3 times.

SST 09842−30080

Standard:

Injection Volume	Difference Between Each Injector
76 to 91 cm^3 (4.6 to 5.6 cu in.) per 15 seconds	16 cm^3 (1.0 cu in.) or less

NOTICE:

Always turn on and off the voltage on the battery side, not the fuel pump side.

If the injection volume is not as specified, replace the injector.

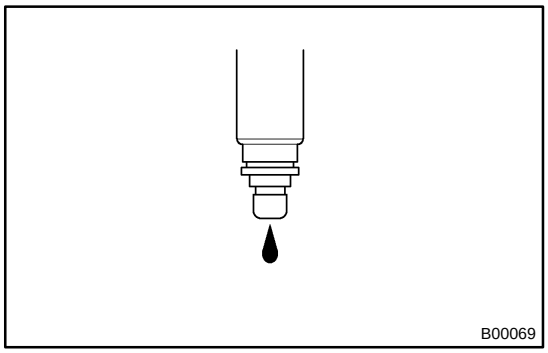

(c) Check fuel leakage.

(1) In the condition above, disconnect the test probes of SST (wire) from the battery and check the fuel leakage from the injector.

Fuel drop: 1 drop or less per 12 minutes

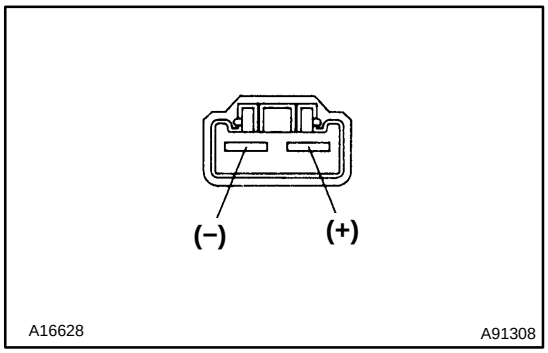

2. FUEL PUMP

(a) Check fuel pump resistance.

(1) Measure the resistance between the terminals.

Resistance: 0.2 to 3.0 Ω at 20°C (68°F)

(b) Check fuel pump operation.

(1) Apply battery voltage to both terminals. Check that the pump operates.

NOTICE:

- **These tests must be done within 10 seconds to prevent the coil from burning out.**
- **Keep fuel pump as far away from the battery as possible.**
- **Always turn on and off the voltage on the battery side, not the fuel pump side.**

FUEL INJECTOR ASSY (2AZ−FE)(From July, 2003)

1109L−04

COMPONENTS

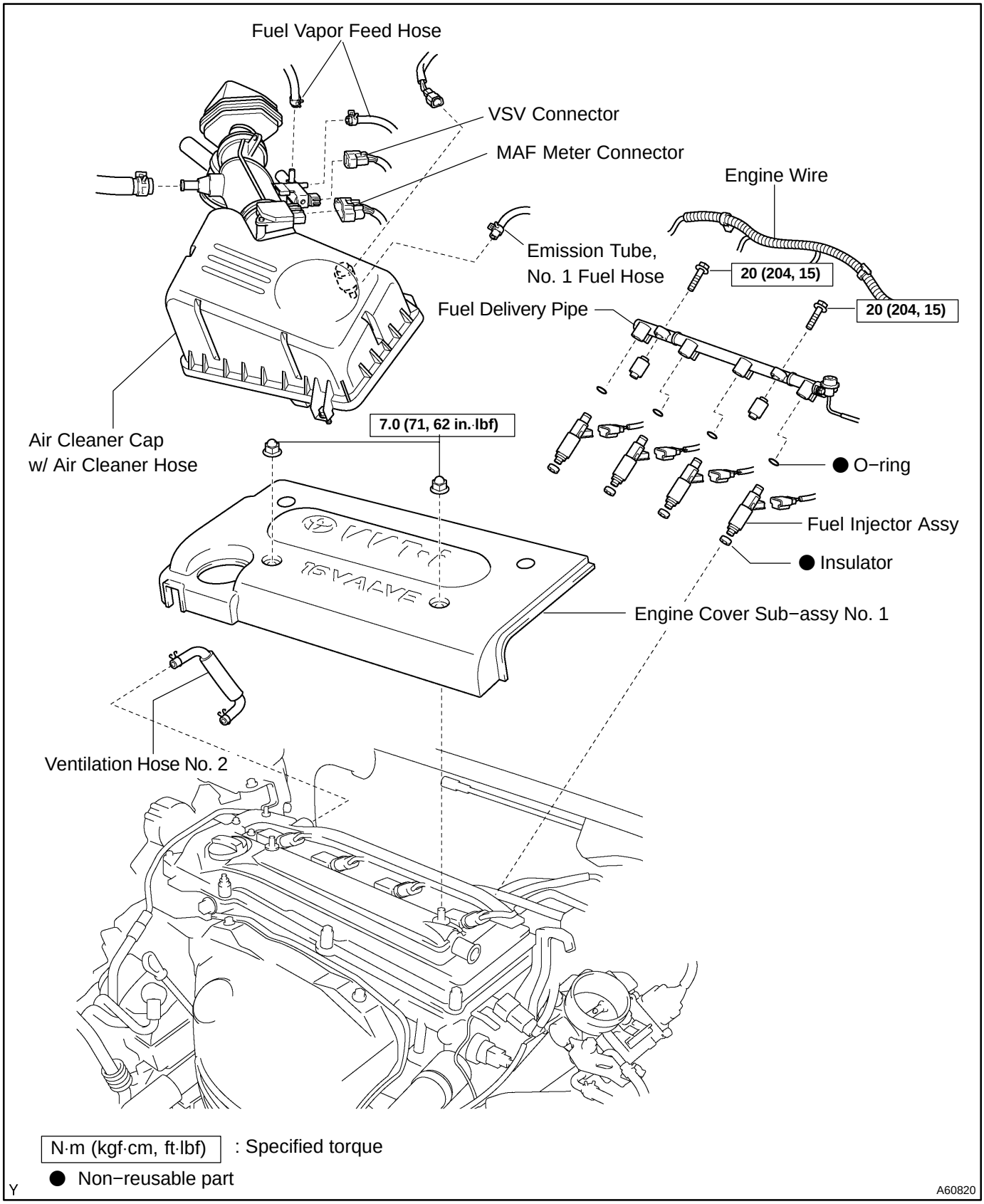

11021−09

REPLACEMENT

1. **WORK FOR PREVENTING GASOLINE FROM SPILLING OUT (See page 11−1)**
2. **REMOVE AIR CLEANER CAP WITH AIR CLEANER HOSE (See page 10−7)**
3. **REMOVE ENGINE COVER SUB−ASSY NO.1 (See page 10−7)**
4. **DISCONNECT FUEL TUBE SUB−ASSY (See page 11−1)**

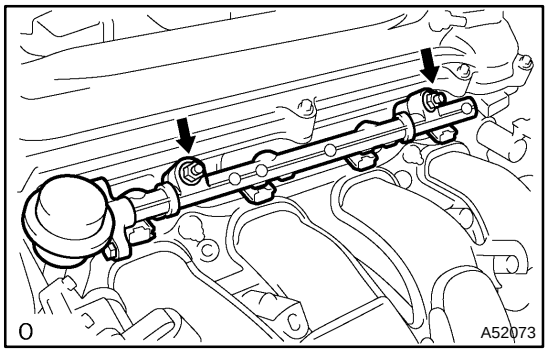

5. REMOVE FUEL DELIVERY PIPE W/INJECTOR

NOTICE:

Be careful not to drop the injectors when removing the delivery pipe.

(a) Remove the ventilation hose No. 2.
(b) Disconnect the 4 injector connecters from the injector.
(c) Remove the 2 clamps and wire harnesses from the delivery pipe.
(d) Remove the 2 bolts and the delivery pipe together with the 4 injectors.
(e) Remove the 2 spacers from the cylinder head.

6. REMOVE FUEL INJECTOR ASSY

(a) Pull out the 4 injectors from the delivery pipe.

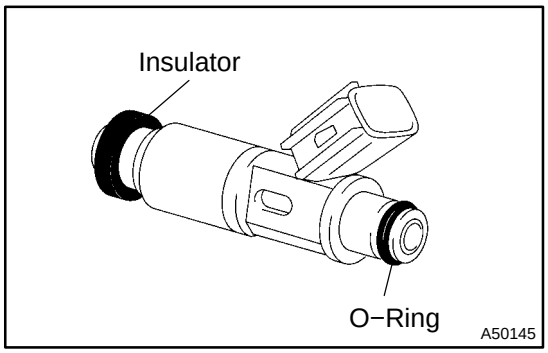

7. INSTALL FUEL INJECTOR ASSY

(a) Install a new insulator to each injector.
(b) Apply a light coat of grease or gasoline to a new O−ring and install to each injector.

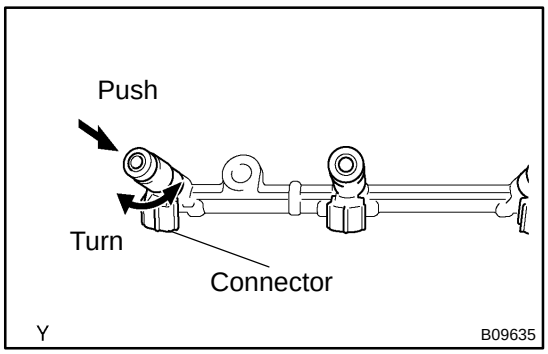

(c) Apply a light coat of grease or gasoline on the place where a delivery pipe touches the O−ring.
(d) To install the fuel injector into the fuel delivery pipe, push the fuel injector while twisting it back and forth.
(e) Install the 4 injectors.

NOTICE:

- **Be careful not to twist the O−ring.**
- **After installing the fuel injector, check that it turns smoothly. If not, reinstall it with a new O−ring.**

(f) Position the injector connector downward.

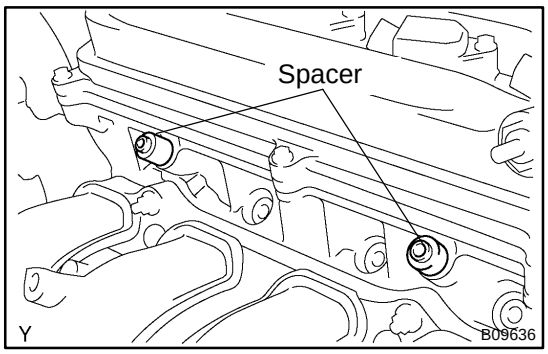

8. INSTALL FUEL DELIVERY PIPE W/INJECTOR

(a) Place the 2 spacers in position on the cylinder head.

(b) Place the delivery pipe together with the 4 injectors in position on the cylinder head.

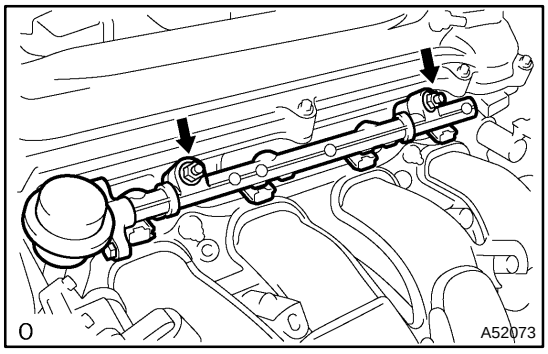

(c) Temporarily install the 2 bolts holding the delivery pipe to the cylinder.

NOTICE:

After installing the fuel injector, check that it turns smoothly. If not, reinstall it with a new O−ring.

(d) Position the injector connector outward.

(e) Tighten the 2 bolts holding the delivery pipe to the cylinder head.

Torque: 20 N·m (204 kgf·cm, 15 ft·lbf)

9. CONNECT FUEL TUBE SUB−ASSY (See page 11−1)

10. INSPECT FOR FUEL LEAKS (See page 11−4)

11. INSTALL ENGINE COVER SUB−ASSY NO.1 (See page 10−7)

12. INSTALL AIR CLEANER CAP WITH AIR CLEANER HOSE (See page 10−7)

FUEL PUMP ASSY (2AZ−FE)(From July, 2003)

1109M−04

COMPONENTS

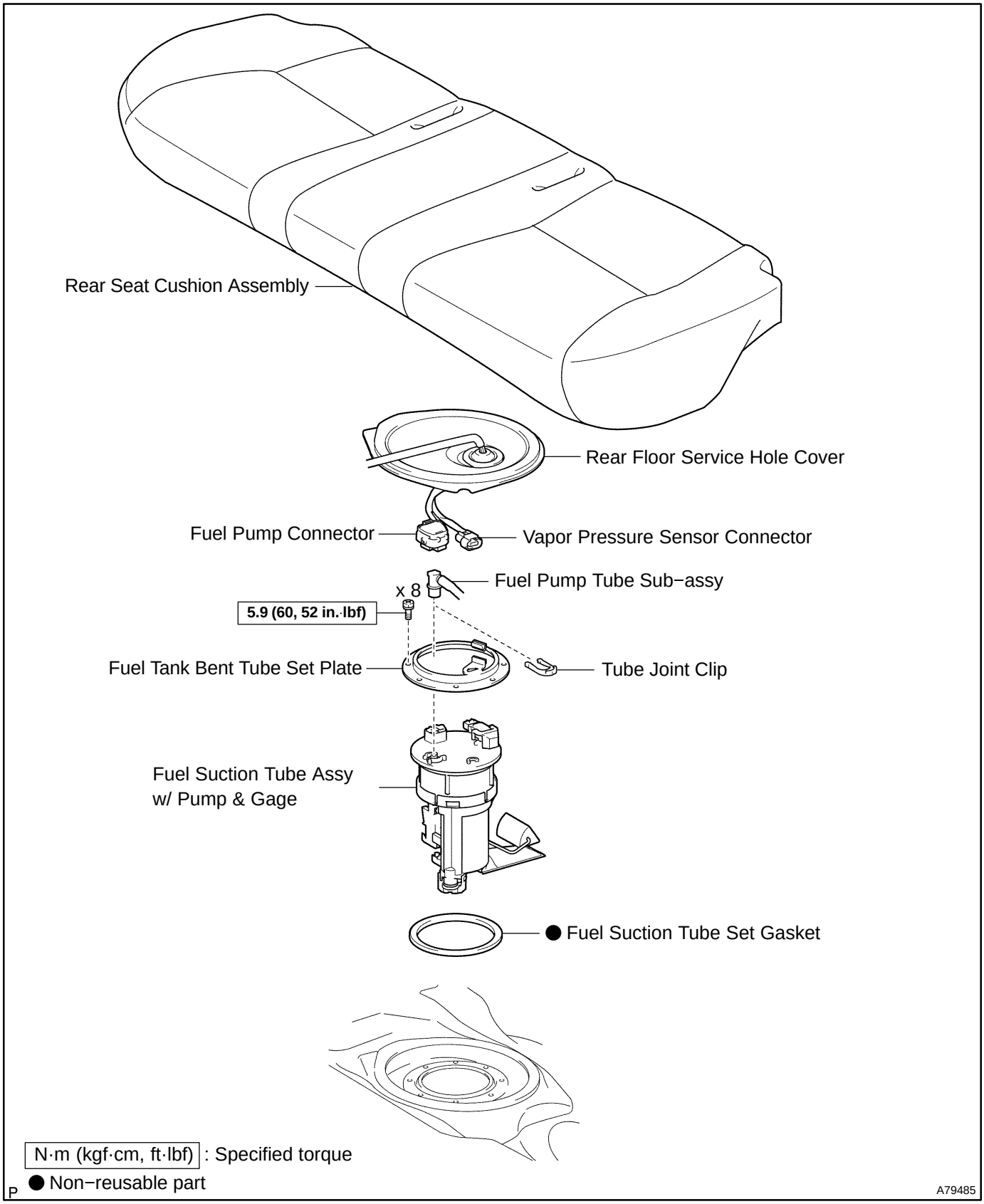

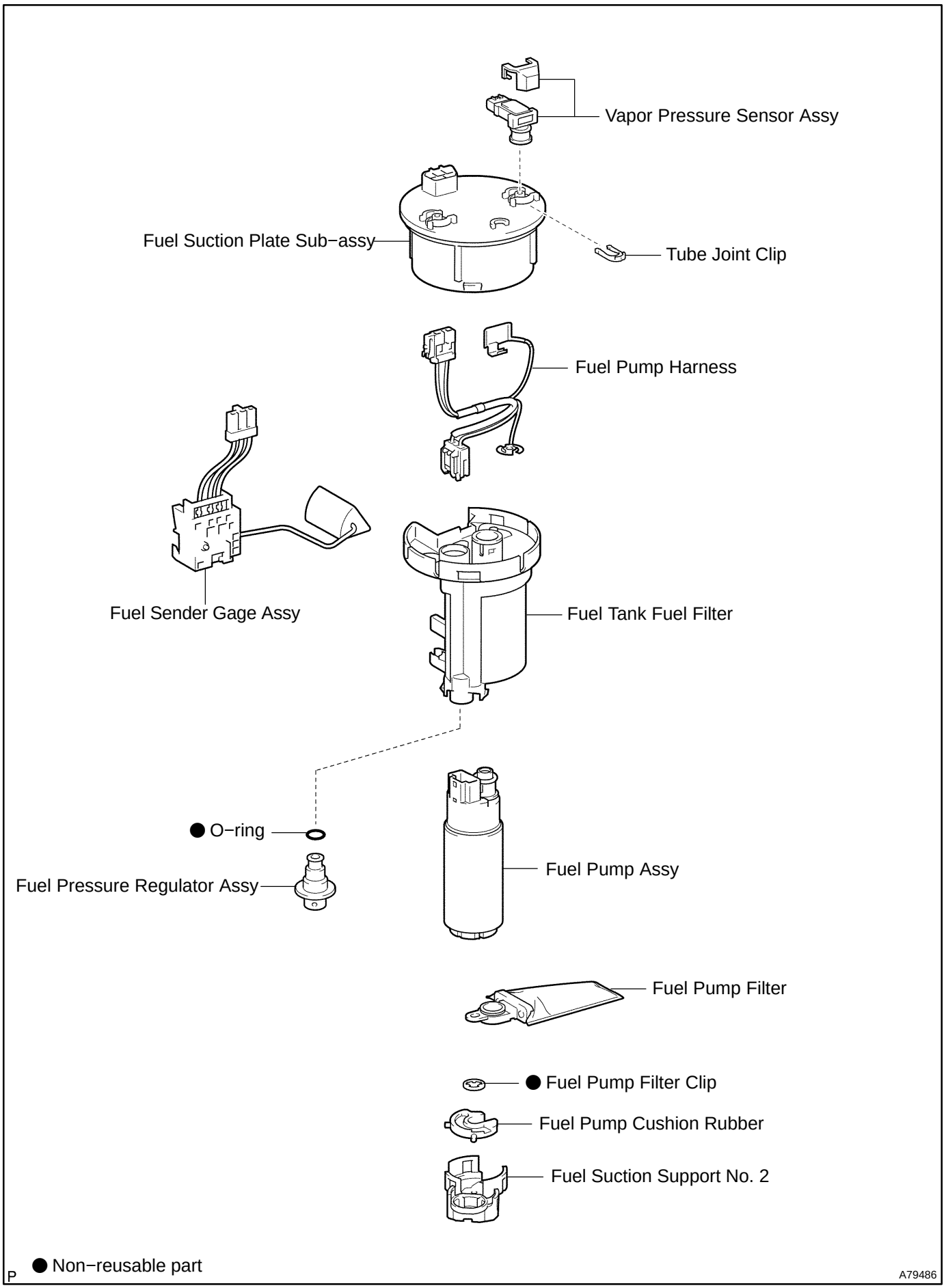
Vapor Pressure Sensor Assy
Fuel Suction Plate Sub−assy
Tube Joint Clip
Fuel Pump Harness
Fuel Sender Gage Assy
Fuel Tank Fuel Filter
● O−ring
Fuel Pressure Regulator Assy
Fuel Pump Assy
Fuel Pump Filter
● Fuel Pump Filter Clip
Fuel Pump Cushion Rubber
Fuel Suction Support No. 2
● Non−reusable part
P
A79486

110XJ−03

REPLACEMENT

1. DISCHARGE FUEL SYSTEM PRESSURE (See page 11−1)

2. REMOVE REAR SEAT CUSHION ASSEMBLY (See page 72−32)

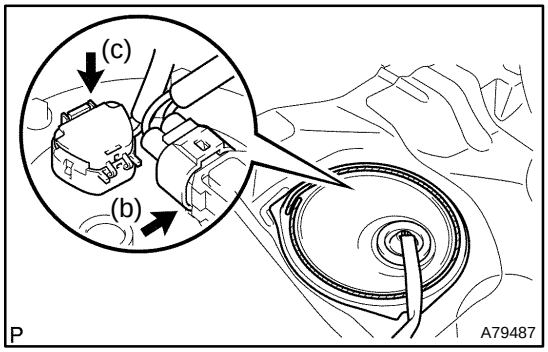

3. REMOVE REAR FLOOR SERVICE HOLE COVER

(a) Remove the rear floor service hole cover.

(b) Disconnect the vapor pressure sensor connector.

(c) Disconnect the fuel pump connector.

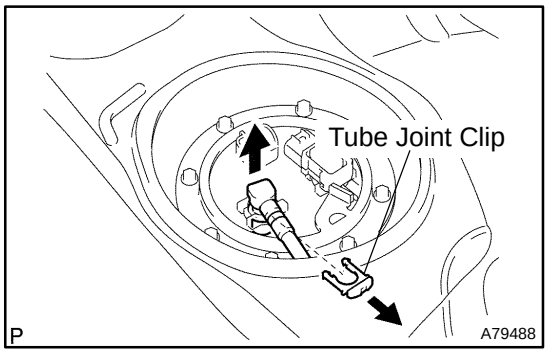

4. SEPARATE FUEL PUMP TUBE SUB−ASSY

(a) Remove the tube joint clip, and pull out the fuel pump tube.

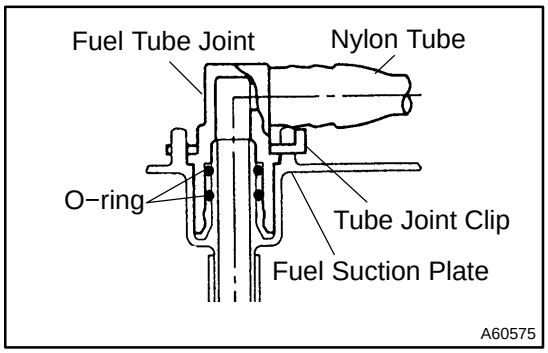

NOTICE:

- **Before this operation, check the connector for dirt, mud or other contamination.**
- **Be careful of mud. The connector's O−ring, which seals the pipe and connector, becomes contaminated easily.**
- **Do not use any tool in this operation.**
- **Do not bend or twist the nylon tube. Protect the connector by covering it with a vinyl or plastic bag.**
- **When the pipe and the connector are stuck, push and pull the connector to release it. Then pull out the connector from the pipe.**

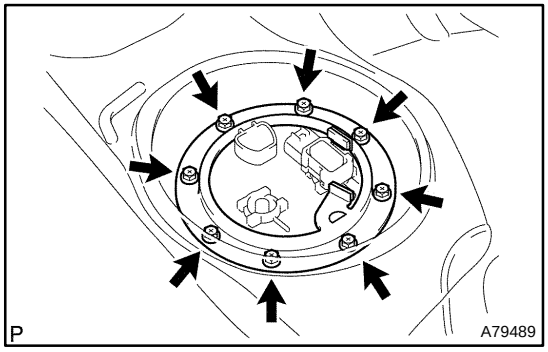

5. REMOVE FUEL TANK VENT TUBE SET PLATE

(a) Remove the 8 bolts and the set plate.

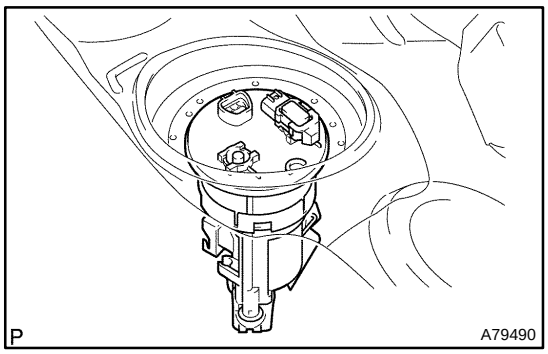

6. REMOVE FUEL SUCTION TUBE ASSY W/ PUMP & GAGE

(a) Remove the fuel suction tube from the fuel tank.

NOTICE:

- **Do not damage the fuel pump filter.**
- **Do not bend the arm of the fuel sender gage.**

(b) Remove the gasket from the fuel suction tube.

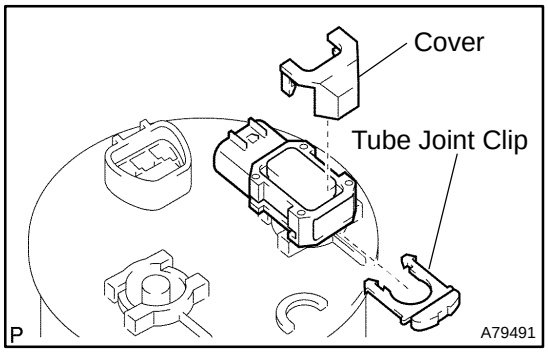

7. REMOVE VAPOR PRESSURE SENSOR ASSY

(a) Remove the cover.

(b) Remove the tube joint clip, and pull out the vapor pressure sensor.

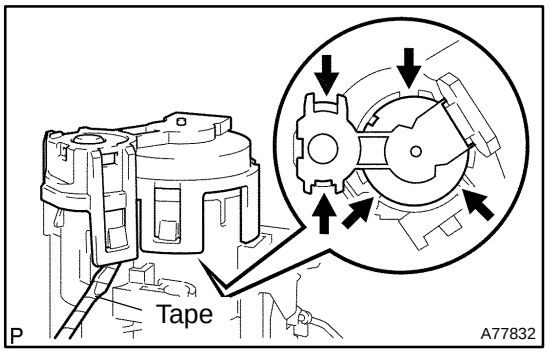

8. REMOVE FUEL SUCTION SUPPORT NO.2

(a) Using a screwdriver with its tip wrapped in tape, detach the 5 snap claws from the claw holes, and remove the fuel suction support.

NOTICE:

Do not damage the fuel suction support.

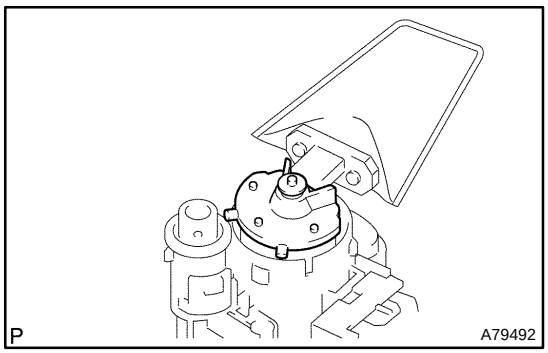

9. REMOVE FUEL PUMP CUSHION RUBBER

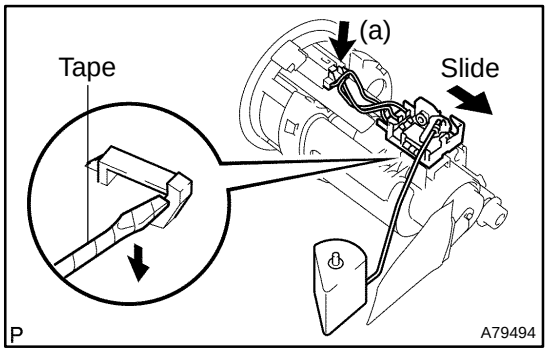

10. REMOVE FUEL SENDER GAGE ASSY

(a) Disconnect the fuel sender gage connector.

(b) Using a screwdriver with its tip wrapped in tape, unfasten the clamp to release the fuel sender gage. Slide the fuel sender gage to remove it from the fuel pump.

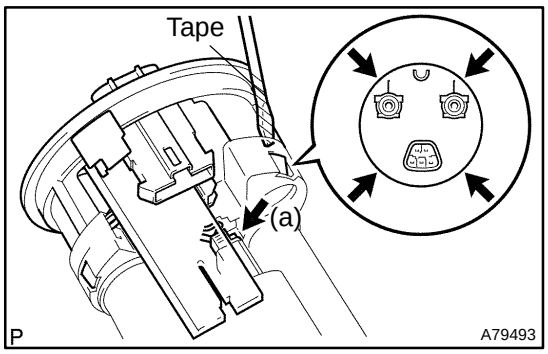

11. REMOVE FUEL SUCTION PLATE SUB−ASSY

(a) Disconnect the fuel pump connector.

(b) Using a screwdriver with its tip wrapped in tape, detach the 4 snap claws from the claw holes, and pull out the fuel suction plate.

NOTICE:

Do not damage the fuel suction support.

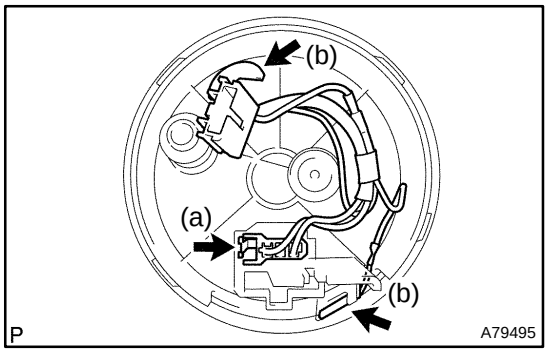

12. REMOVE FUEL PUMP HARNESS

(a) Disconnect the connector.

(b) Using a small screwdriver, pry out the fuel pump harness.

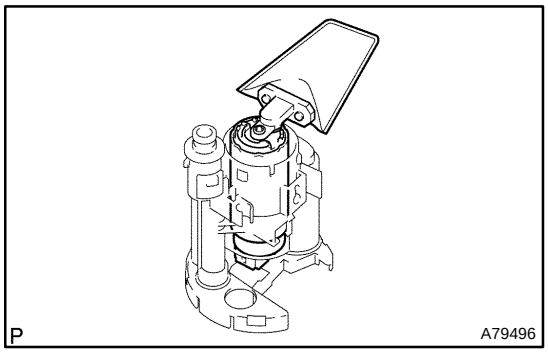

13. REMOVE FUEL PUMP

(a) Pull out the fuel pump from the fuel tank fuel filter.

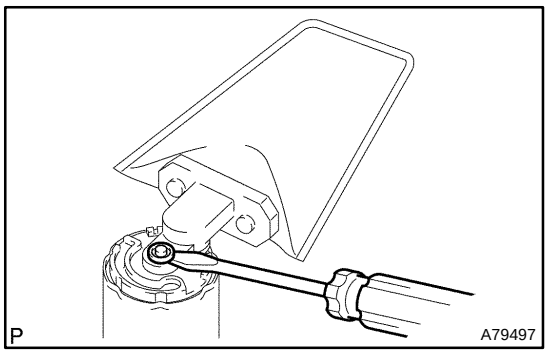

14. REMOVE FUEL PUMP FILTER

(a) Using a small screwdriver, pry out the clip.

(b) Pull out the fuel pump filter from the fuel pump.

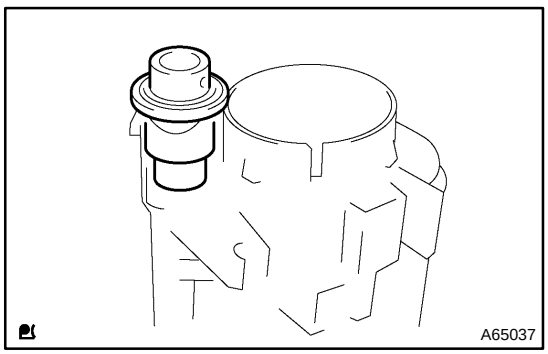

15. REMOVE FUEL PRESSURE REGULATOR ASSY

(a) Pull out the fuel pressure regulator from the fuel tank fuel filter.

(b) Remove the O−ring from the fuel pressure regulator.

16. INSTALL FUEL PRESSURE REGULATOR ASSY

(a) Apply a light coat of gasoline or grease to a new O−ring, and install it to the fuel pressure regulator.

(b) Push in the fuel pressure regulator to the fuel tank fuel filter.

17. INSTALL FUEL PUMP FILTER

(a) Install the fuel pump filter with a new clip.

18. INSTALL FUEL PUMP

(a) Apply a light coat of gasoline or grease to the O−ring of the fuel pump.

(b) Push in the fuel pump to the fuel tank fuel filter.

19. INSTALL FUEL PUMP HARNESS

20. INSTALL FUEL SUCTION PLATE SUB−ASSY

21. INSTALL FUEL SENDER GAGE ASSY

22. INSTALL FUEL PUMP CUSHION RUBBER

23. INSTALL FUEL SUCTION SUPPORT NO.2

24. INSTALL VAPOR PRESSURE SENSOR ASSY

25. INSTALL FUEL SUCTION TUBE ASSY W/ PUMP & GAGE

(a) Install a new gasket to the fuel suction tube.

(b) Install the fuel suction tube.

NOTICE:

- **Do not damage the fuel pump filter.**
- **Do not bend the arm of the fuel sender gage.**

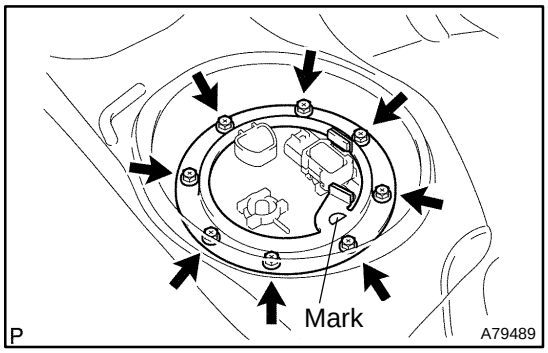

26. INSTALL FUEL TANK VENT TUBE SET PLATE

(a) Align the mark of the set plate with the fuel suction tube.

(b) Install the set plate with the 8 bolts.

Torque: 5.9 N·m (60 kgf·cm, 52 in.·lbf)

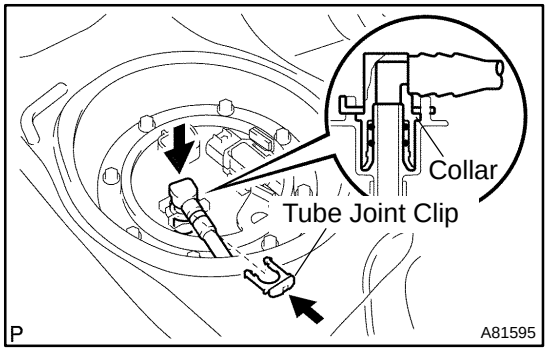

27. CONNECT FUEL PUMP TUBE SUB−ASSY

(a) Install the fuel pump tube with the tube joint clip.

NOTICE:

- **Check that there are no scratches or foreign objects on the connecting part.**
- **Check that the fuel tube joint is inserted securely.**
- **Check that the tube joint clip is on the collar of the fuel tube joint.**
- **After installing the tube joint clip, check that the fuel tube joint has not been pulled off.**

28. CHECK FOR FUEL LEAKS (See page 11−4)

29. INSTALL REAR FLOOR SERVICE HOLE COVER

30. INSTALL REAR SEAT CUSHION ASSEMBLY (See page 72−32)

FUEL TANK ASSY (2AZ−FE)(From July, 2003)

1109O−05

COMPONENTS

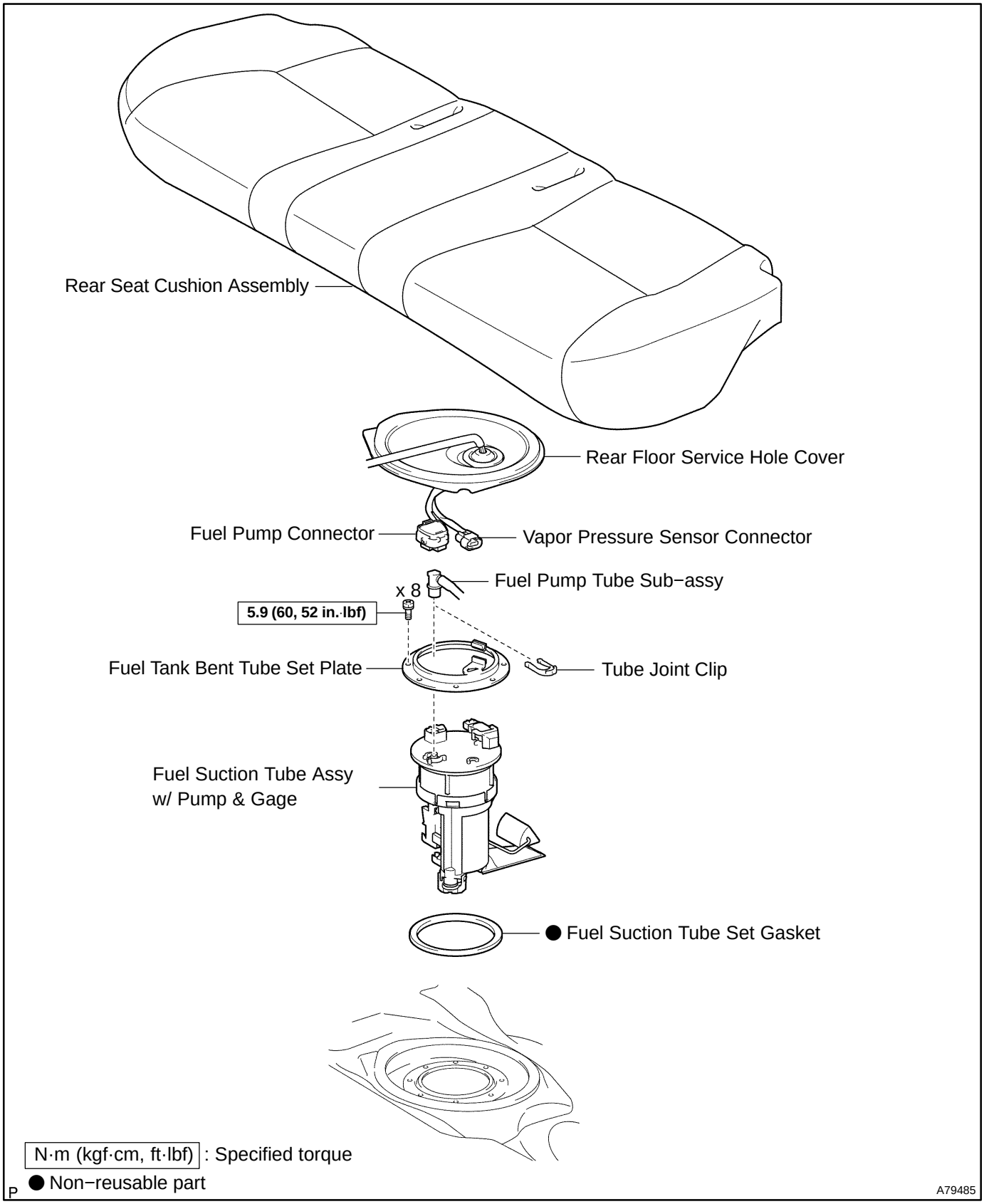

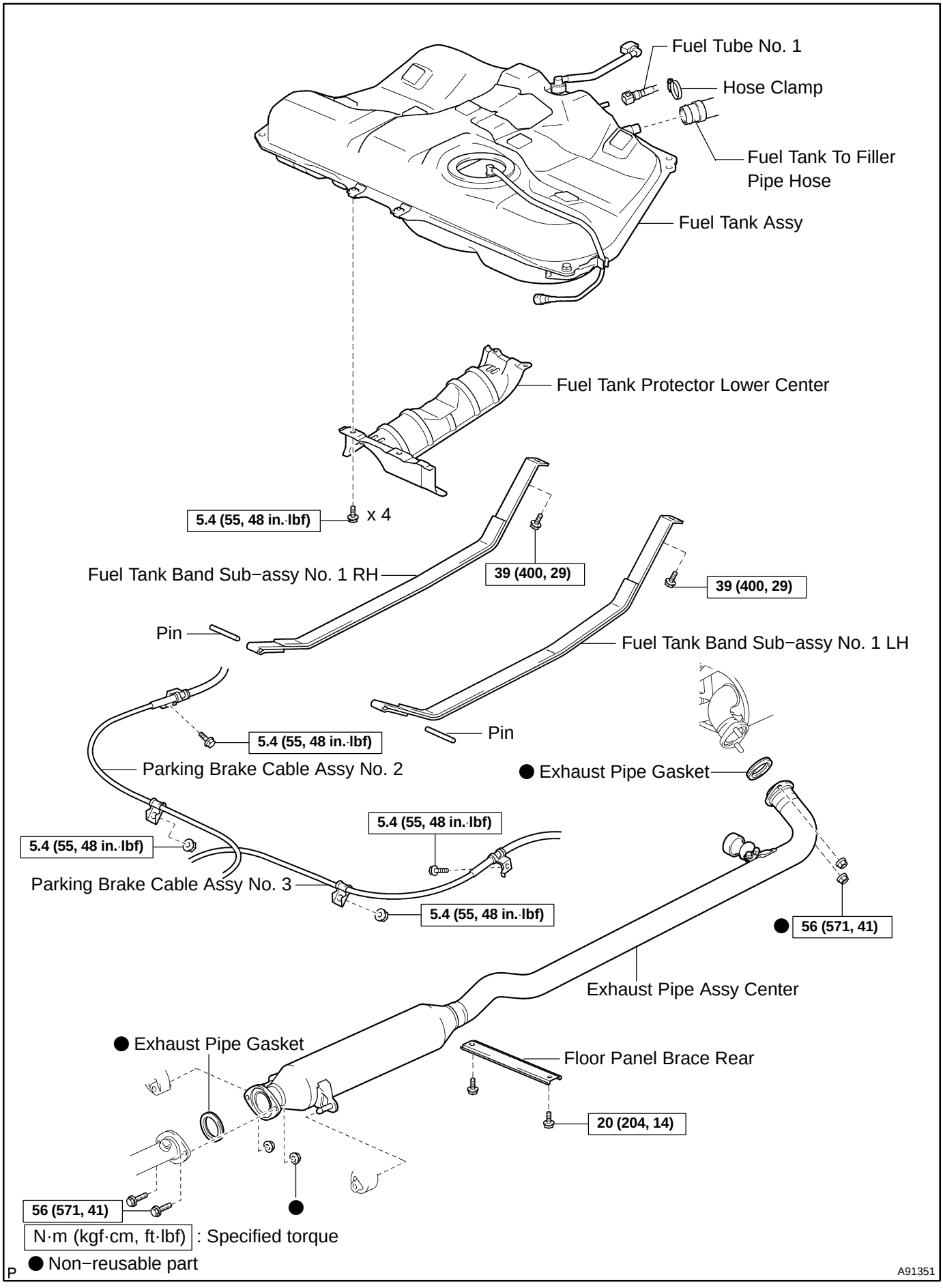
Fuel Tube No. 1
Hose Clamp
Fuel Tank To Filler Pipe Hose
Fuel Tank Assy
Fuel Tank Protector Lower Center
5.4 (55, 48 in.·lbf)
x 4
Fuel Tank Band Sub−assy No. 1 RH
39 (400, 29)
39 (400, 29)
Pin
Fuel Tank Band Sub−assy No. 1 LH
Pin
5.4 (55, 48 in.·lbf)
Parking Brake Cable Assy No. 2
● Exhaust Pipe Gasket
5.4 (55, 48 in.·lbf)
5.4 (55, 48 in.·lbf)
Parking Brake Cable Assy No. 3
5.4 (55, 48 in.·lbf)
● 56 (571, 41)
Exhaust Pipe Assy Center
● Exhaust Pipe Gasket
Floor Panel Brace Rear
20 (204, 14)
56 (571, 41)
N·m (kgf·cm, ft·lbf) : Specified torque
● Non−reusable part
P
A91351

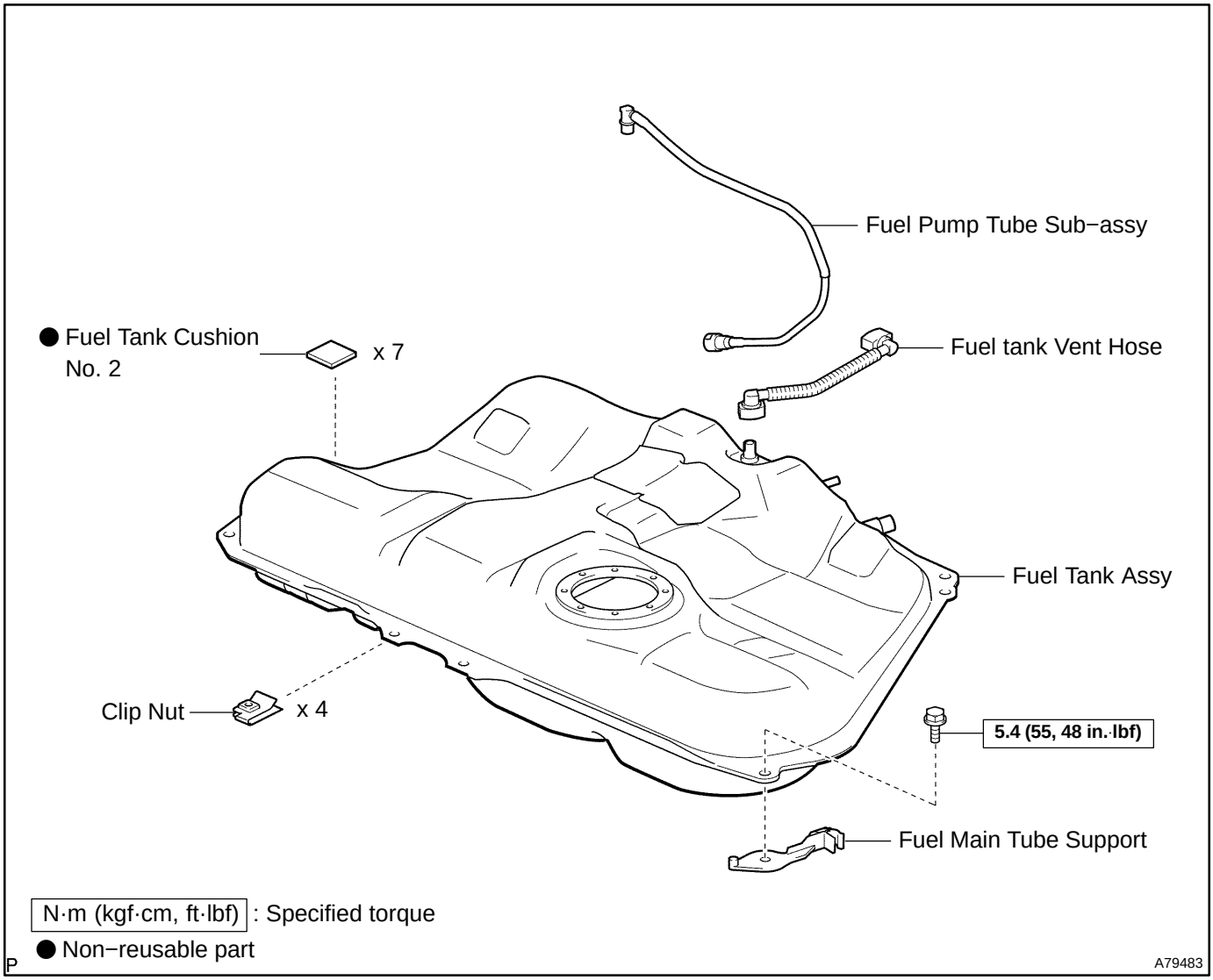
Fuel Pump Tube Sub−assy
● Fuel Tank Cushion No. 2
x 7
Fuel tank Vent Hose
Fuel Tank Assy
Clip Nut
x 4
5.4 (55, 48 in.·lbf)
Fuel Main Tube Support
N·m (kgf·cm, ft·lbf) : Specified torque
● Non−reusable part
A79483

110XM−03

REPLACEMENT

1. **DISCHARGE FUEL SYSTEM PRESSURE (See page 11−1)**
2. **REMOVE REAR SEAT CUSHION ASSEMBLY (See page 72−32)**
3. **REMOVE REAR FLOOR SERVICE HOLE COVER (See page 11−14)**
4. **SEPARATE FUEL PUMP TUBE SUB−ASSY (See page 11−14)**
5. **REMOVE FUEL TANK VENT TUBE SET PLATE (See page 11−14)**
6. **REMOVE FUEL SUCTION TUBE ASSY W/ PUMP & GAGE (See page 11−14)**
7. **DRAIN FUEL**
8. **REMOVE FLOOR PANEL BRACE REAR (See page 15−3)**
9. **REMOVE EXHAUST PIPE ASSY CENTER**

(a) Remove the 2 bolts, 4 nuts, exhaust pipe and 2 gaskets.

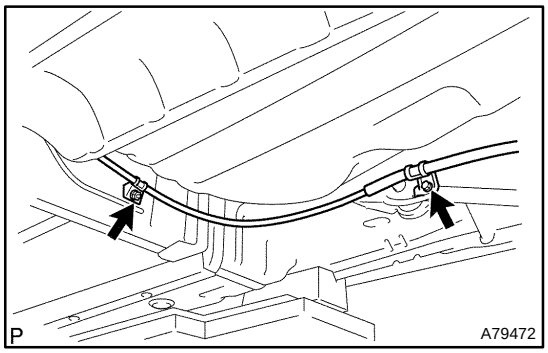

10. **DISCONNECT PARKING BRAKE CABLE ASSY NO.2**

(a) Remove the set bolt and the set nut of the parking brake cable.

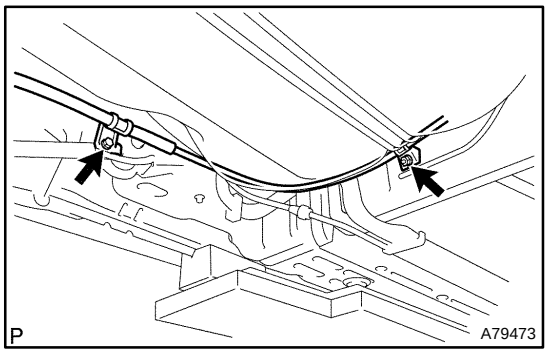

11. **DISCONNECT PARKING BRAKE CABLE ASSY NO.3**

(a) Remove the set bolt and the set nut of the parking brake cable.

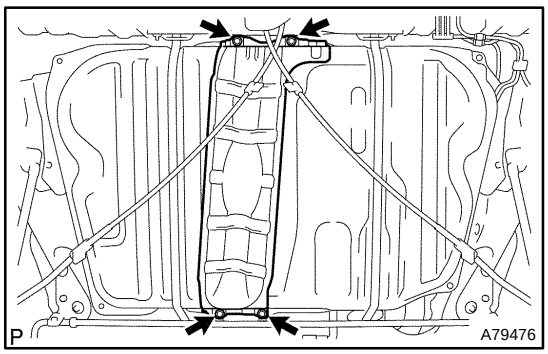

12. **REMOVE FUEL TANK PROTECTOR LOWER CENTER**

(a) Remove the 4 bolts and fuel tank protector.

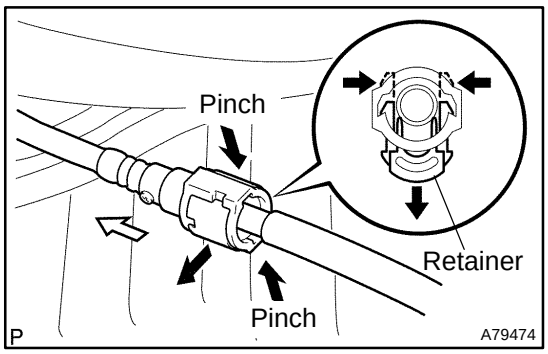

13. REMOVE FUEL TANK ASSY

(a) Disconnect the fuel pump tube.

(1) Pinch the tab of the retainer to remove the lock claws and pull down it as shown in the illustration.

(2) Pull out the fuel tank main tube.

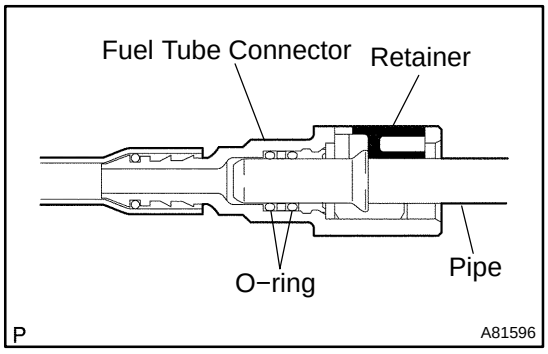

NOTICE:

- **Before this operation, check the connector for dirt, mud or other contamination.**
- **Be careful of mud. The connector's O−ring, which seals the pipe and connector, becomes contaminated easily.**
- **Do not use any tools in this operation.**
- **Do not bend or twist the nylon tube. Protect the connector by covering it with a vinyl or plastic bag.**
- **When the pipe and connector are stuck, push and pull the connector to release it. Then pull out the connector from the pipe.**

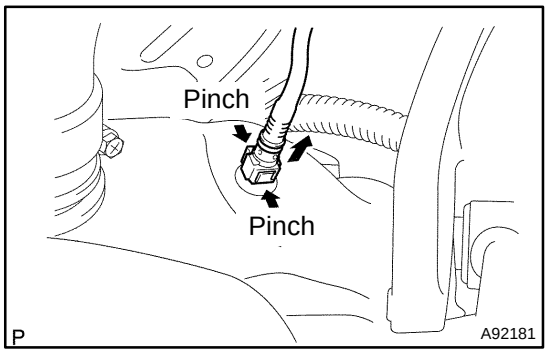

(b) Disconnect the fuel tube No. 1.

(1) Pinch the tube connector and then pull out the fuel tube No. 1.

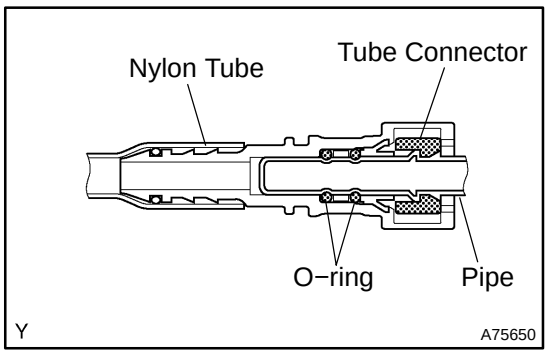

NOTICE:

- **Before this operation, check the connector for dirt, mud or other contamination.**
- **Be careful of mud. The connector's O−ring, which seals the pipe and connector, becomes contaminated easily.**
- **Do not use any tools in this operation.**
- **Do not bend or twist the nylon tube. Protect the connector by covering it with a vinyl or plastic bag.**
- **When the pipe and connector are stuck, push and pull the connector to release it. Then pull out the connector from the pipe.**

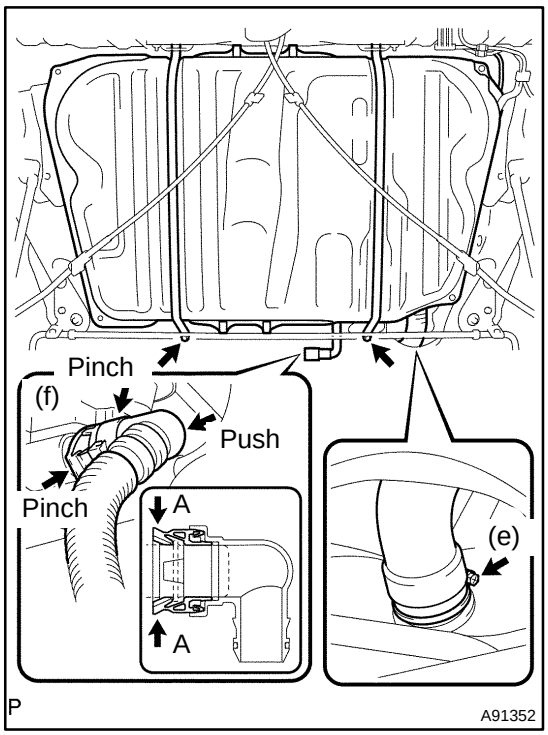

(c) Set up a transmission jack underneath the fuel tank.
(d) Remove the 2 set bolts of the fuel tank bands.
(e) Remove the hose clamp and disconnect the fuel tank to filler pipe hose.
(f) Disconnect the fuel tank vent hose from the charcoal canister.
  (1) Push the connector deep into the charcoal canister to release the locking pin.
  (2) Pinch portion A.
  (3) Pull out the connector.
(g) Remove the fuel tank.

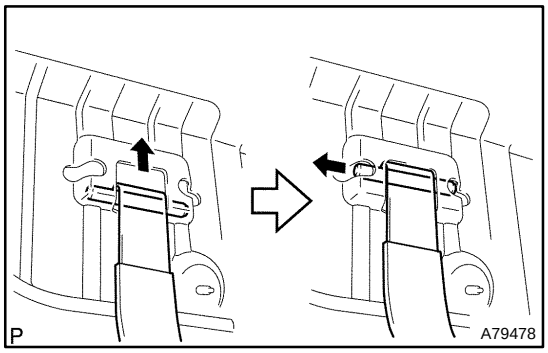

(h) Remove the 2 pins and 2 fuel tank bands as shown in the illustration.

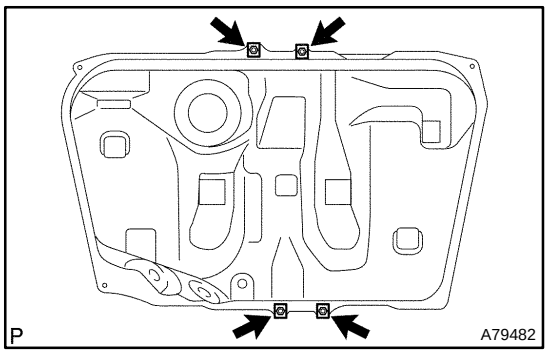

(i) Remove the 4 clip nuts.

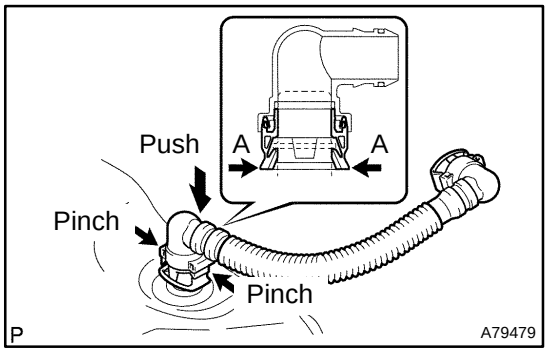

14. REMOVE FUEL TANK VENT HOSE

(a) Push the connector deep into the charcoal canister to release the locking pin.
(b) Pinch portion A.
(c) Pull out the connector.

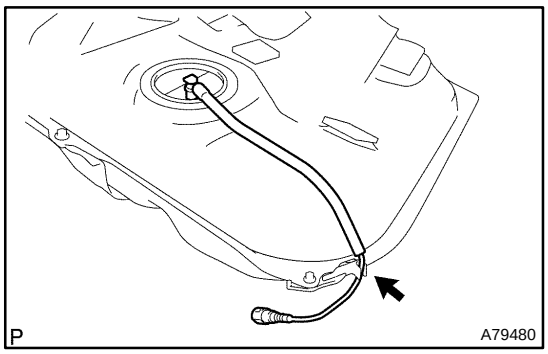

15. REMOVE FUEL PUMP TUBE SUB−ASSY

(a) Remove the fuel pump tube from the fuel main tube support.

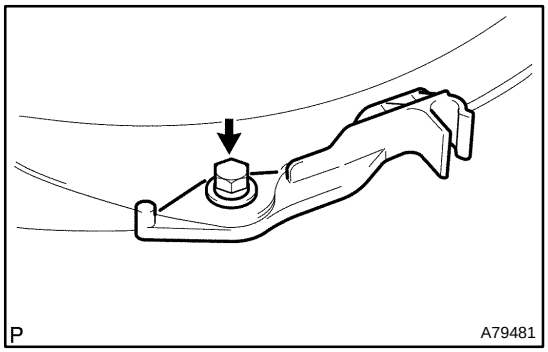

16. REMOVE FUEL MAIN TUBE SUPPORT

(a) Remove the bolt and tube support.

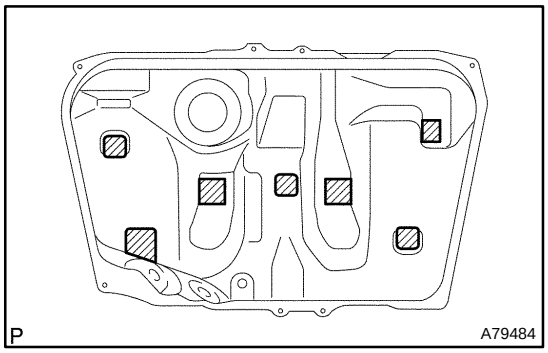

17. REMOVE FUEL TANK CUSHION NO.2

18. INSTALL FUEL TANK CUSHION NO.2

(a) Install 7 new fuel tank cushions to the fuel tank.

19. INSTALL FUEL MAIN TUBE SUPPORT

Torque: 5.4 N·m (55 kgf·cm, 48 in.·lbf)

20. INSTALL FUEL PUMP TUBE SUB−ASSY

21. INSTALL FUEL TANK VENT HOSE

22. INSTALL FUEL TANK ASSY

(a) Install the 4 clip nuts.

(b) Install the 2 fuel tank bands with the 2 pins.

(c) Connect the fuel tank vent hose.

(d) Connect the fuel tank inlet pipe with the fuel filler pipe clamp.

(e) Tighten the set 2 bolts of the fuel tank bands.

Torque: 39 N·m (400 kgf·cm, 29 ft·lbf)

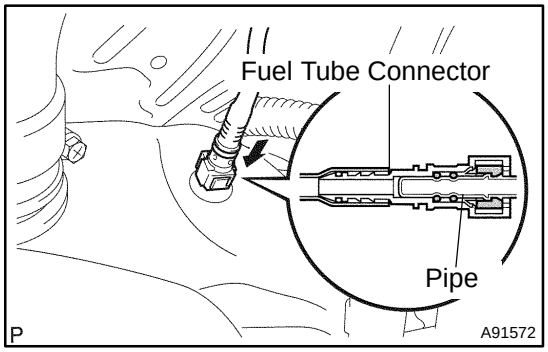

(f) Connect the fuel tube No. 1.

(1) Push the fuel tube connector into the pipe until fuel tube connector makes ”click” sound.

NOTICE:

- **Check if there is any damage or foreign objects on the connected part.**
- **After connecting, check if the fuel tube connector and the pipe are securely connected by trying to pull them apart.**

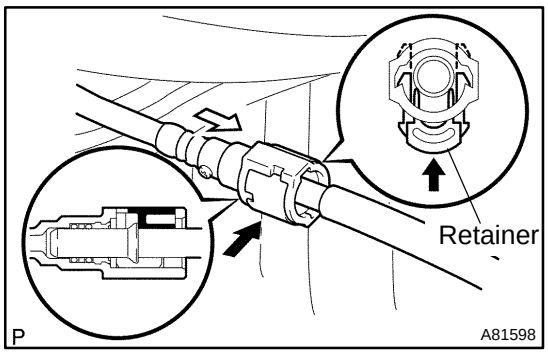

(g) Connect the fuel pump tube.
(1) Push in the fuel tube connector to the pipe until, and push up retainer to the claws lock.

NOTICE:

- **Check if there is any damage or foreign objects on the connected part.**
- **After connecting, check if the fuel tube connector and the pipe are securely connected by trying to pull them apart.**

23. INSTALL FUEL TANK PROTECTOR LOWER CENTER
Torque: 5.4 N·m (55 kgf·cm, 48 in.·lbf)
24. INSTALL PARKING BRAKE CABLE ASSY NO.3
Torque: 5.4 N·m (55 kgf·cm, 48 in.·lbf)
25. INSTALL PARKING BRAKE CABLE ASSY NO.2
Torque: 5.4 N·m (55 kgf·cm, 48 in.·lbf)
26. INSTALL EXHAUST PIPE ASSY CENTER
(a) Install 2 new gaskets and the exhaust pipe with the 2 bolts and 4 new nuts.
Torque: 56 N·m (571 kgf·cm, 41 ft·lbf)
27. INSTALL FUEL SUCTION TUBE ASSY W/ PUMP & GAGE (See page 11−14)
28. INSTALL FUEL TANK VENT TUBE SET PLATE (See page 11−14)
29. CONNECT FUEL PUMP TUBE SUB−ASSY (See page 11−14)
30. ADD FUEL
31. CHECK FOR FUEL LEAKS (See page 11−4)
32. CHECK FOR EXHAUST GAS LEAKS
33. INSTALL REAR FLOOR SERVICE HOLE COVER (See page 11−14)
34. INSTALL REAR SEAT CUSHION ASSEMBLY (See page 72−32)
35. INSTALL FLOOR PANEL BRACE REAR (See page 15−3)

FUEL SYSTEM (1MZ−FE/3MZ−FE)

110UM−03

PRECAUTION

1. PRECAUTION

(a) Before working on the fuel system, disconnect the negative (−) terminal cable from the battery.
(b) Do not smoke or be near an open flame when working on the fuel system.
(c) Keep gasoline away from rubber or leather parts.

2. DISCHARGE FUEL SYSTEM PRESSURE

CAUTION:

- **Do not disconnect any part of the fuel system until you have discharged the fuel system pressure.**
- **Even after discharging the fuel pressure, place a shop rag over fittings as you separate them to reduce risk of fuel spray on yourself or in the engine compartment.**

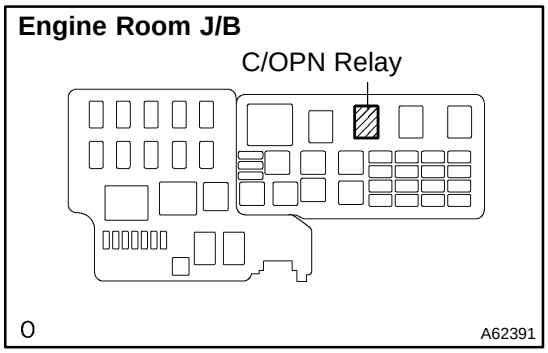

(a) Remove the C/OPN relay from the engine room J/B.
(b) Start the engine. After the engine has stopped, turn the ignition switch OFF.

HINT:

There is a case that DTC P0171 (system to lean) is output.

(c) Check that the engine does not start.
(d) Remove the fuel tank cap, and allow the air out of the fuel tank.
(e) Disconnect the negative (−) terminal cable from the battery.
(f) Reinstall the C/OPN relay.

3. FUEL SYSTEM

(a) When disconnecting the high fuel pressure line, a large amount of gasoline will spill out, so observe these procedures.
  (1) Try to prevent gasoline from spilling out.
  (2) Disconnect the fuel pump tube (see page 11−45).
  (3) Drain the fuel remaining inside the fuel pump tube.

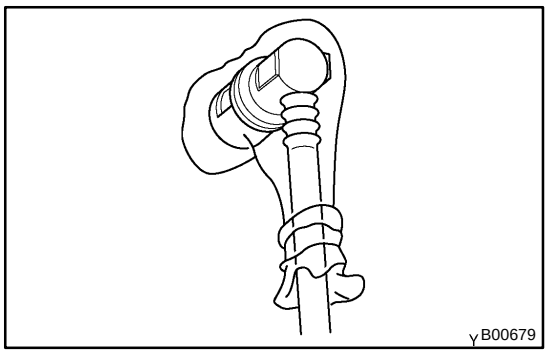

  (4) To protect the disconnected fuel pump tube from damage and contamination, cover it with a vinyl bag.
  (5) Put a container under the connection.

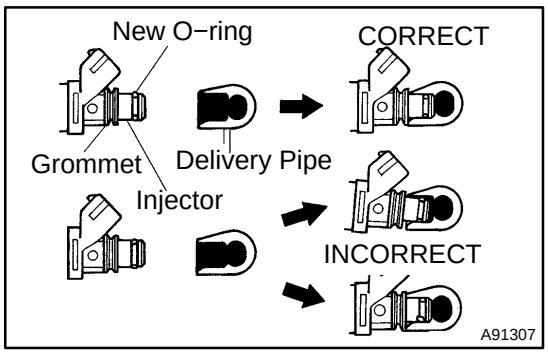

(b) Observe the following precautions when removing and installing the fuel injectors.
(1) Never reuse O−rings.
(2) When installing a new O−ring on the injector, be careful not to damage it.
(3) Coat new O−rings with grease or gasoline before installing. Never use engine oil, gear oil or brake oil.

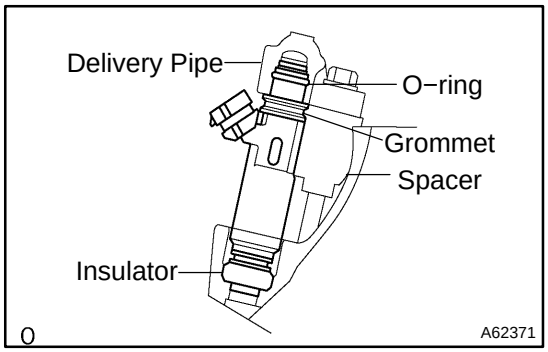

(c) Install the injector to the delivery pipe and cylinder head, as shown in the illustration. Before installing the injector, be sure to apply grease or gasoline on the place where the delivery pipe contacts the O−ring of the injector.

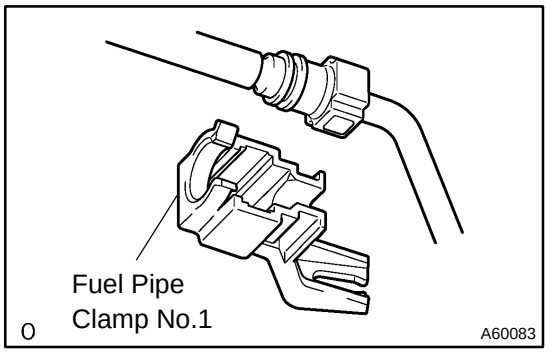

(d) Observe these precautions when disconnecting the fuel tube connectors.
(1) Remove the fuel pipe clamp from the connector.
(2) Check for dirt or mud on the pipe and around the connector before disconnection. Clean if necessary.

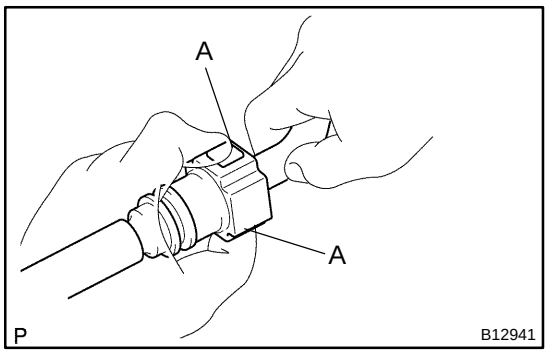

(3) Disconnect the connector from the hose while pinching part A with your fingers, as shown in the illustration.

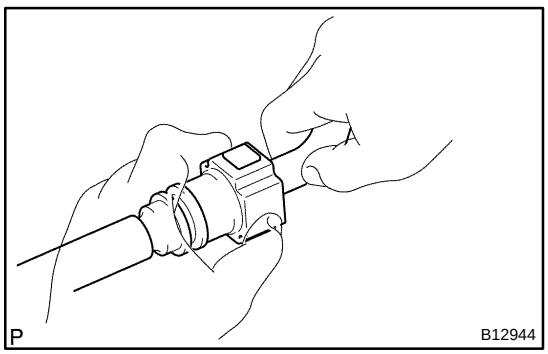

(4) If the connector and the pipe are stuck, pinch the fuel pipe, push and pull the connector to disconnect it and pull it out. Do not use any tools.
(5) If dirt or any other substance is found on the sealing surface that might interfere with the seal, clean the area thoroughly before assembly.

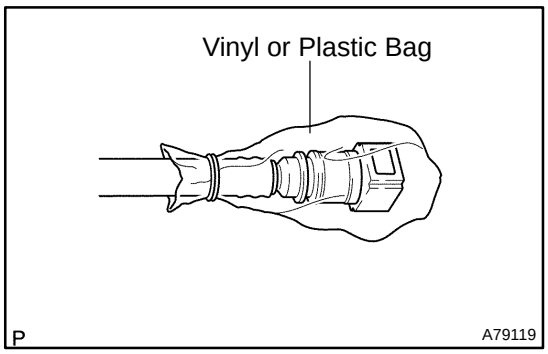

(6) To protect the disconnected pipe and connector from damage and contamination, cover it with a vinyl bag.

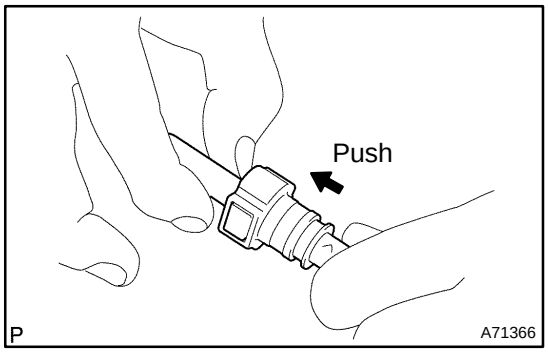

(e) Observe these precautions when connecting the fuel tube connector.
(1) Check that there is no damage or contamination in the connected part of the pipe.
(2) Align the axis of the connector with the axis of the pipe. Push the pipe into the connector until the connector makes a ”click” sound. If the connection is tight, apply little amount of fresh engine oil on the tip of the pipe.

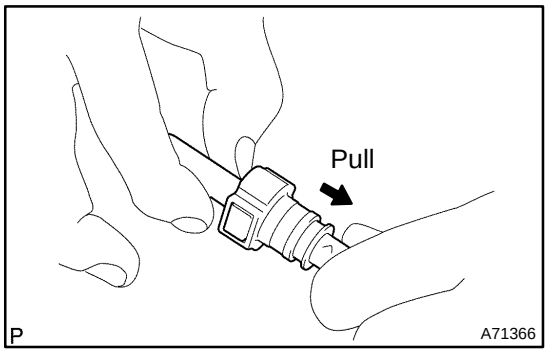

(3) After having finished the connection, check if the pipe and the connector are securely connected by trying to pull them apart.
(4) Install the fuel pipe clamp to the connector.
(5) Check if there is any fuel leakage.

4. CHECK FOR FUEL LEAKS

(a) Check that there are no fuel leaks after doing maintenance anywhere on the fuel system (see page 11−29).

ON−VEHICLE INSPECTION

1. CHECK FUEL PUMP OPERATION AND FUEL LEAKS

(a) When using the hand−held tester:
Check fuel pump operation.
(1) Connect the hand−held tester to the DLC3.
(2) Turn the ignition switch ON and push the hand−held tester main switch ON.

NOTICE:
Do not start the engine.

(3) Select the ACTIVE TEST mode on the hand−held tester.
(4) If you need help to select active test on the hand−held tester, refer to the hand−held tester is instruction manual.
(5) Turn the ignition switch OFF.
(6) Disconnect the hand−held tester from the DLC3.

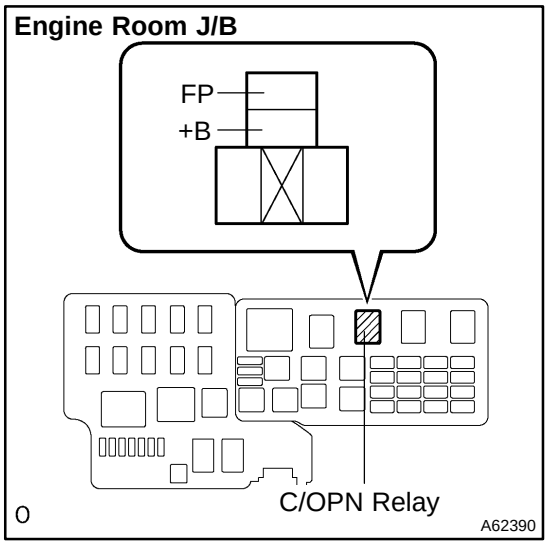

(b) When not using the hand−held tester:
Check fuel pump operation.
(1) Remove the C/OPN relay from the engine room J/B.
(2) Using a service wire, connect terminals FP and +B of the engine room J/B.

NOTICE:
Pay close attention to the terminal connecting position to avoid a malfunction.

(3) Turn the ignition switch ON, and check that the fuel pump operates.

NOTICE:
Do not start the engine.

(c) Check that there are no fuel leaks after doing maintenance anywhere on the fuel system.
(d) Turn the ignition switch OFF.
(e) Remove the servive wire from the engine room J/B.
(f) Install the C/OPN relay to the engine room J/B.

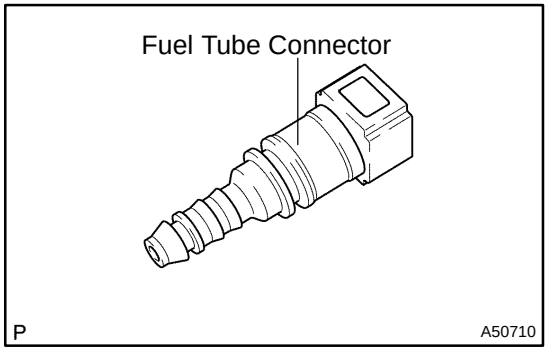

2. CHECK FUEL PRESSURE

(a) Check that the battery positive voltage is above 12 V.
(b) Disconnect the negative (−) terminal cable from the battery.
(c) Purchase a new fuel tube and take out the fuel tube connector from its pipe.
Fuel tube: Part No. 23801−20190

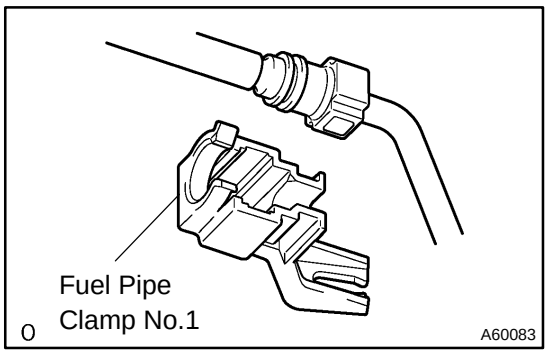

(d) Remove the fuel pipe clamp from the fuel tube connector.

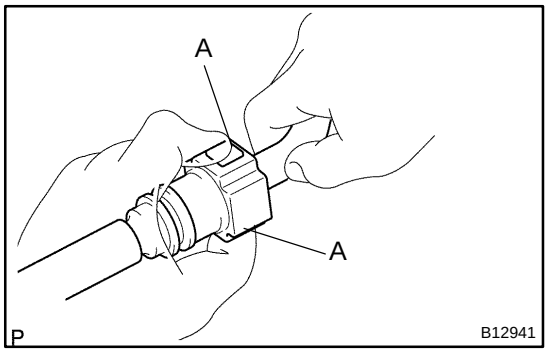

(e) Disconnect the fuel tube connector from the fuel pipe by pinching part A with your fingers, as shown in the illustration.

CAUTION:

- **Always read the precautions (see page 11−26) before disconnecting the fuel tube connector (quick type).**
- **The fuel pipe line may spray fuel as a result of retained pressure that remains in it. Do not allow fuel to be sprayed in the engine compartment.**

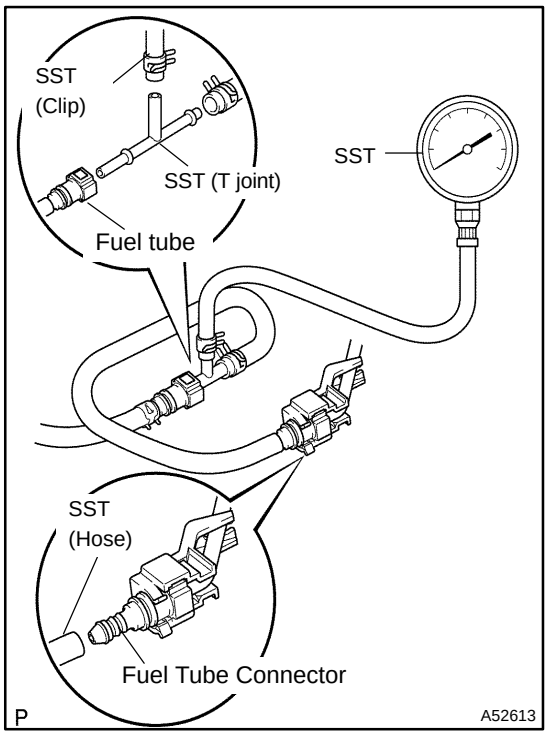

(f) Install SST (pressure gauge) and fuel tube connecter using SST as shown in the illustration.
SST 09268−41047 (90467−13001, 95336−08070), 09268−45014 (09268−41200, 09268−41220, 09268−41250)

(g) Wipe off any gasoline.

(h) Reconnect the negative (−) battery cable.

(i) When using hand−held tester:
Operate the fuel pump (see step 1 (a)).

(j) When not using hand−held tester:
Operate the fuel pump (see step 1 (b)).

(k) Measure the fuel pressure.
Fuel pressure:
304 to 343 kPa (3.1 to 3.5 kgf/cm^2, 44 to 50 psi)

If the pressure is high, replace the fuel pressure regulator.
If the pressure is low, check the fuel hoses and connections, fuel pump, fuel filter and fuel pressure regulator.

(l) Start the engine.

(m) Measure the fuel pressure at idle.
Fuel pressure:
304 to 343 kPa (3.1 to 3.5 kgf/cm^2, 44 to 50 psi)

(n) Stop the engine.

(o) Check that the fuel pressure remains as specified for 5 minutes after the engine has stopped.

Fuel pressure: 147 kPa (1.5 kgf/cm^2, 21 psi)

If the pressure is not as specified, check the fuel pump, pressure regulator and/or injectors.

(p) After checking the fuel pressure, disconnect the negative (−) battery cable and carefully remove SST and fuel tube connector to prevent gasoline from spraying.

(q) Reconnect the fuel inlet tube (fuel tube connector).

CAUTION:

Always read the precautions (see page 11−26) before connecting the fuel tube connector (quick type).

110UO−03

INSPECTION

1. INSPECT FUEL INJECTOR ASSY

(a) Check the injector resistance.

(1) Measure the resistance between the terminals.

Standard: 13.4 to 14.2 Ω at 20°C (68°F)

If the result is not as specified, replace the injector.

(b) Check the injector injection.

CAUTION:

- **This test involves high−pressure fuel and electricity.**
- **Take every precaution regarding safe handling of both the fuel and the electricity.**
- **Perform this test in a safe area, and avoid any sparks or flame.**
- **Do not smoke.**

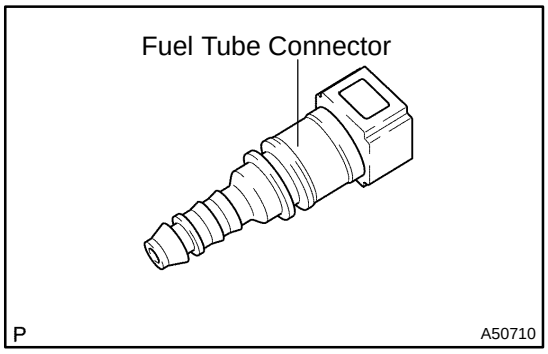

(1) Purchase the new fuel tube and take out the fuel tube connector from its pipe.
Fuel tube: Parts No. 23801−20190

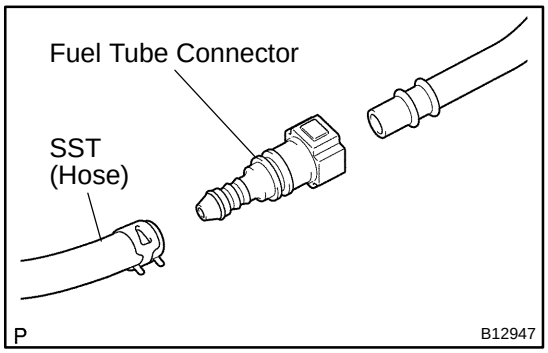

(2) Connect SST and the fuel tube connector to the fuel pipe.

CAUTION:

Always read the precautions (see page 11−26) before connecting the fuel tube connector (quick type).

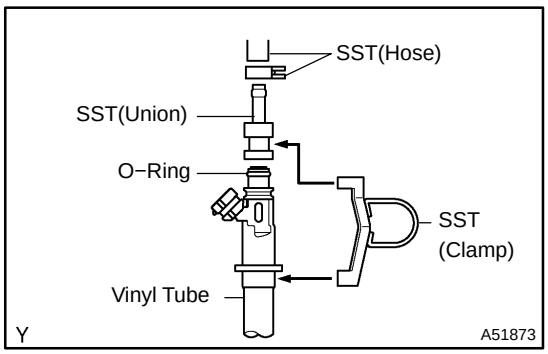

(3) Install the O−ring to the injector.

(4) Connect SST (union and hose) to the injector, and hold the injector and the union with SST (clamp)

(5) Put the injector into a graduated cylinder.

HINT:

Install a suitable vinyl tube onto the injector to contain the gasoline spray.

(6) Operate the fuel pump (see page 11−29).

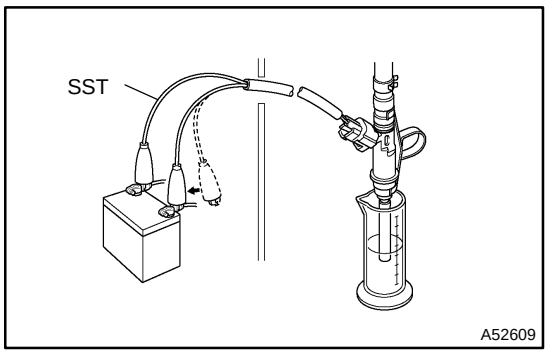

(7) Connect SST (wire) to the injector and the battery for 15 seconds, and measure the injection volume with a graduated cylinder. Test each injector 2 or 3 times.

SST 09842−30070

Standard:

Injection Volume	Difference Between Each Injector
60 to 73 cm^3 (3.7 to 4.5 cu in.) per 15 seconds	13 cm^3 (0.8 cu in.) or less

NOTICE:

Always turn on and off the voltage on the battery side, not the fuel pump side.

If the injection volume is not as specified, replace the injector.

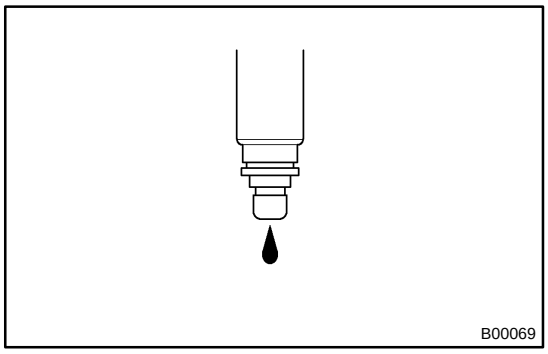

(c) Check fuel leakage.

(1) In the condition above, disconnect the test probes of SST (wire) from the battery and check the fuel leakage from the injector.

Fuel drop: 1 drop or less per 12 minutes

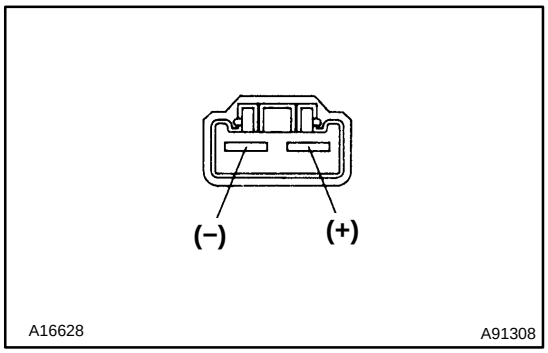

2. INSPECT FUEL PUMP

(a) Check the fuel pump resistance.

(1) Measure the resistance between the terminals.

Standard: 0.2 to 3.0 Ω at 20°C (68°F)

(b) Check fuel pump operation.

(1) Apply battery voltage to both the terminals. Check that the pump operates.

NOTICE:

- **These tests must be done within 10 seconds to prevent the coil from burning out.**
- **Keep fuel pump as far away from the battery as possible.**
- **Always turn on and off the voltage on the battery side, not the fuel pump side.**

FUEL INJECTOR ASSY (1MZ−FE/3MZ−FE)

110Z8−02

COMPONENTS

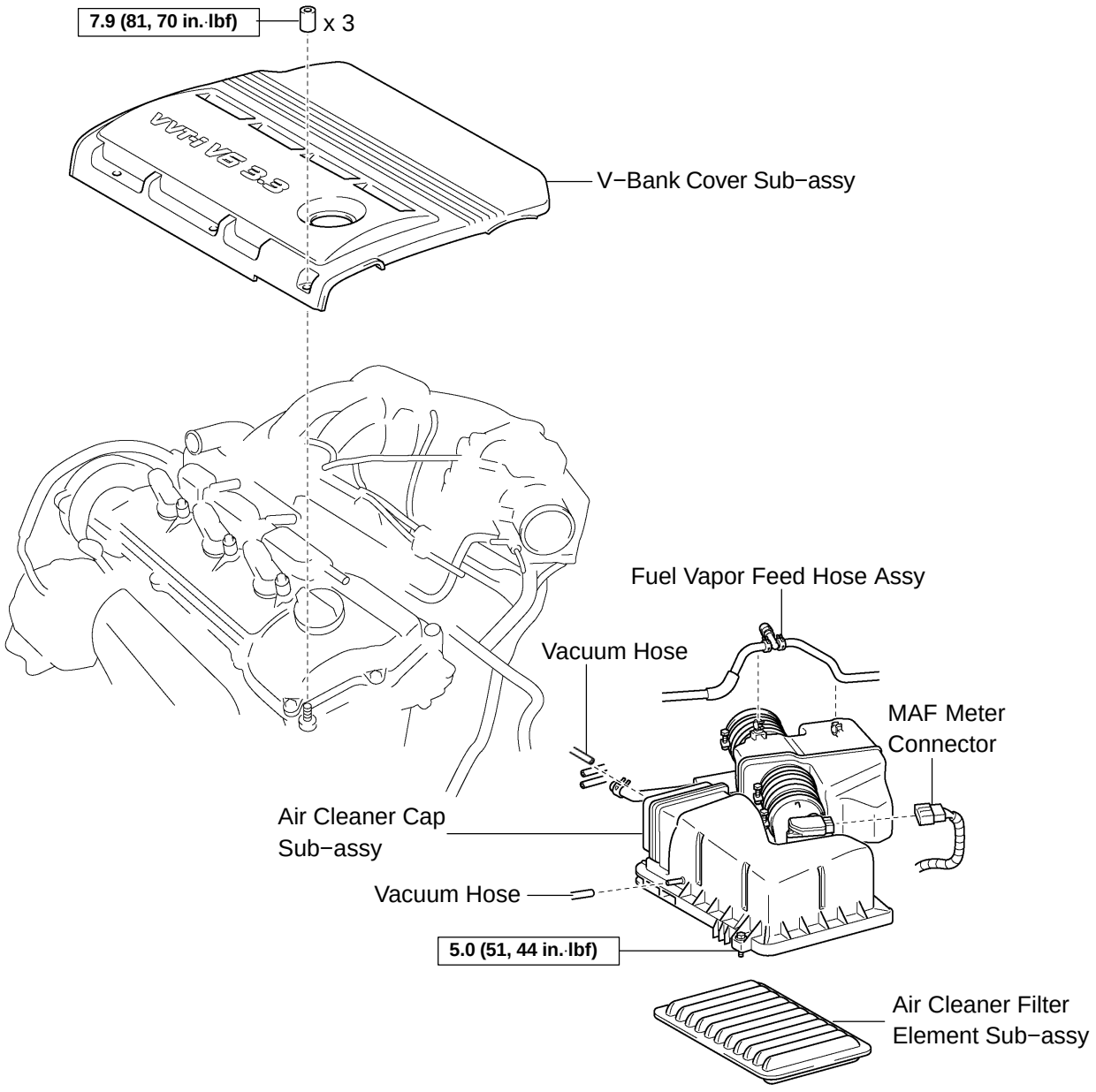

N·m (kgf·cm, ft·lbf) : Specified torque

A88626

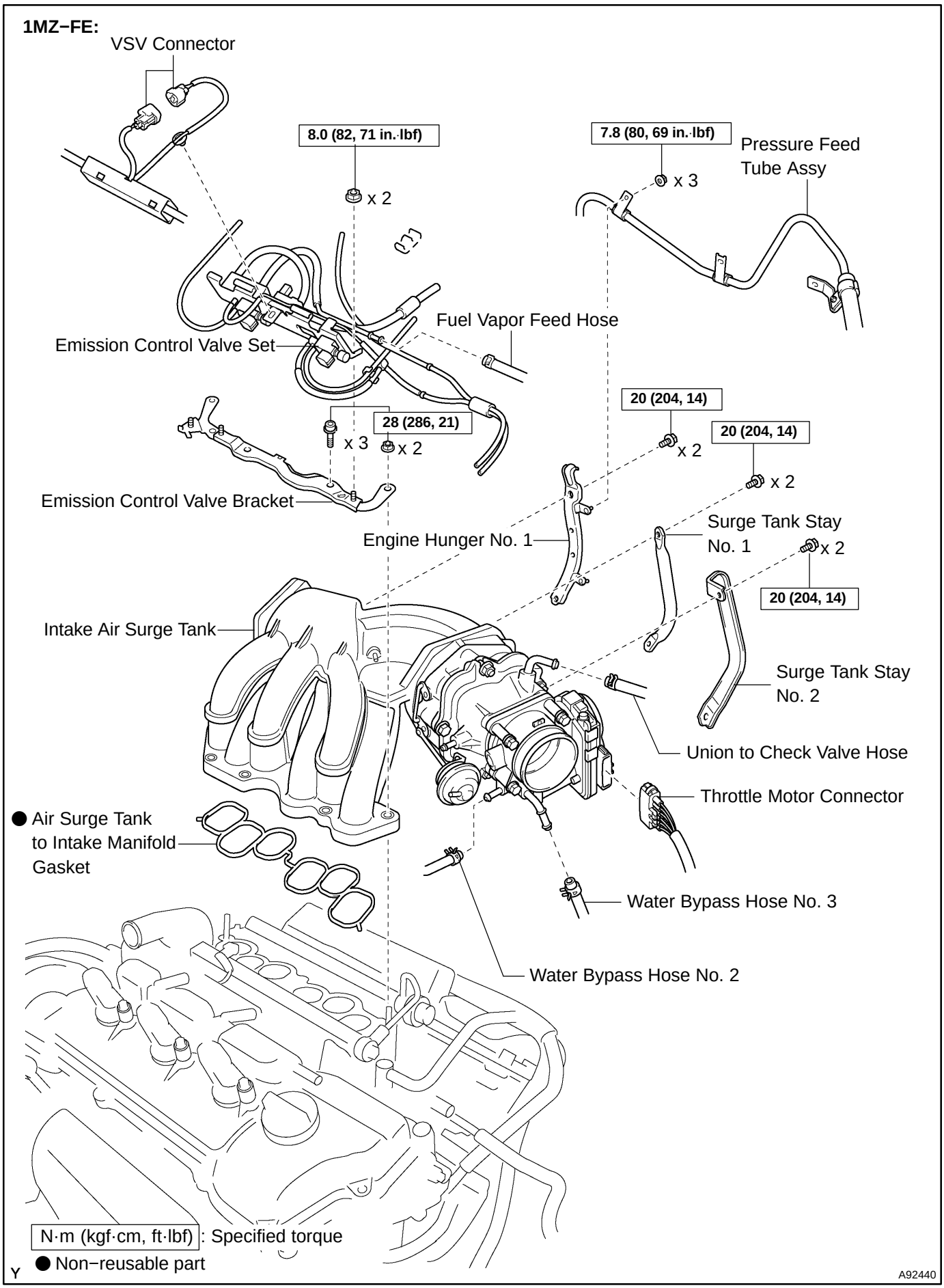
1MZ−FE:
VSV Connector
8.0 (82, 71 in.·lbf)
x 2
7.8 (80, 69 in.·lbf)
x 3
Pressure Feed Tube Assy
Fuel Vapor Feed Hose
Emission Control Valve Set
28 (286, 21)
x 3
x 2
Emission Control Valve Bracket
20 (204, 14)
x 2
20 (204, 14)
x 2
Engine Hunger No. 1
Surge Tank Stay No. 1
x 2
20 (204, 14)
Intake Air Surge Tank
Surge Tank Stay No. 2
Union to Check Valve Hose
Throttle Motor Connector
● Air Surge Tank to Intake Manifold Gasket
Water Bypass Hose No. 3
Water Bypass Hose No. 2
N·m (kgf·cm, ft·lbf): Specified torque
● Non−reusable part
Y
A92440

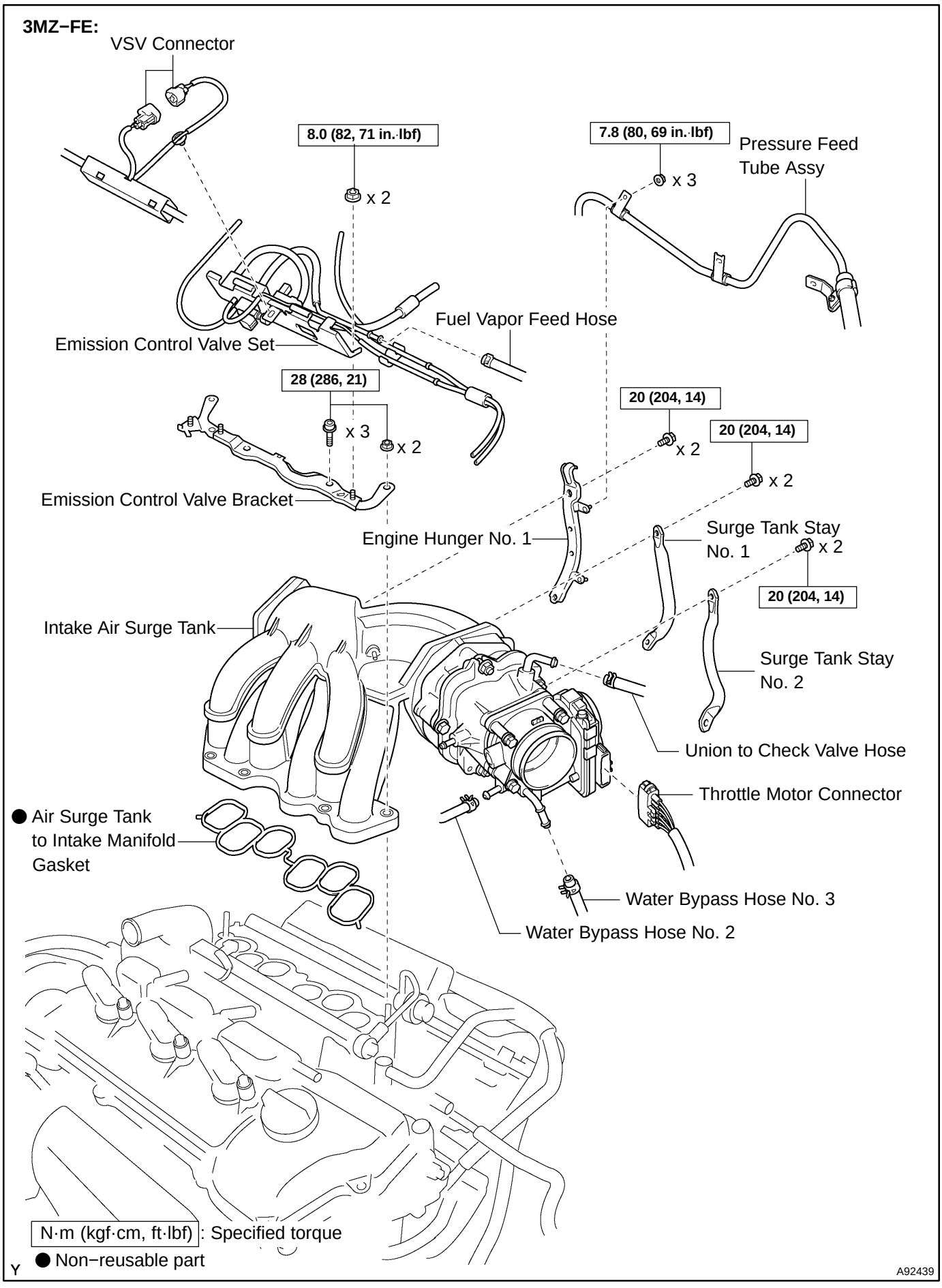
3MZ−FE:
VSV Connector
8.0 (82, 71 in.·lbf)
x 2
7.8 (80, 69 in.·lbf)
x 3
Pressure Feed Tube Assy
Fuel Vapor Feed Hose
Emission Control Valve Set
28 (286, 21)
x 3
x 2
Emission Control Valve Bracket
20 (204, 14)
x 2
20 (204, 14)
x 2
Engine Hunger No. 1
Surge Tank Stay No. 1
x 2
20 (204, 14)
Intake Air Surge Tank
Surge Tank Stay No. 2
Union to Check Valve Hose
Throttle Motor Connector
● Air Surge Tank to Intake Manifold Gasket
Water Bypass Hose No. 3
Water Bypass Hose No. 2
N·m (kgf·cm, ft·lbf): Specified torque
● Non−reusable part
Y
A92439

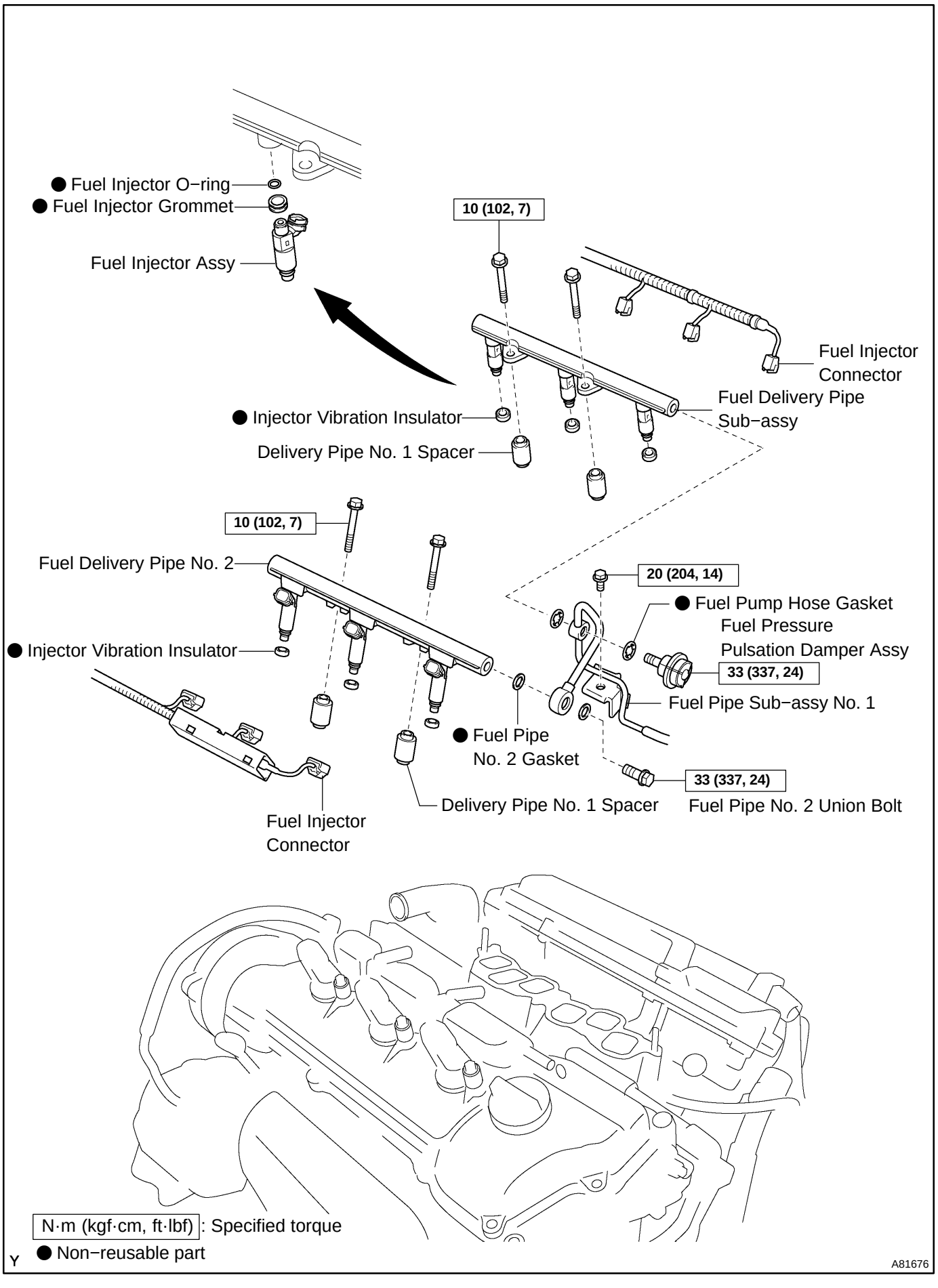
● Fuel Injector O−ring
● Fuel Injector Grommet
Fuel Injector Assy
10 (102, 7)
Fuel Injector Connector
Fuel Delivery Pipe Sub−assy
● Injector Vibration Insulator
Delivery Pipe No. 1 Spacer
10 (102, 7)
Fuel Delivery Pipe No. 2
20 (204, 14)
● Fuel Pump Hose Gasket
Fuel Pressure Pulsation Damper Assy
33 (337, 24)
● Injector Vibration Insulator
Fuel Pipe Sub−assy No. 1
● Fuel Pipe No. 2 Gasket
33 (337, 24)
Delivery Pipe No. 1 Spacer
Fuel Pipe No. 2 Union Bolt
Fuel Injector Connector
N·m (kgf·cm, ft·lbf): Specified torque
● Non−reusable part
Y
A81676

REPLACEMENT

1. DISCHARGE FUEL SYSTEM PRESSURE (See page 11−26)

2. DRAIN ENGINE COOLANT (See page 16−27)

3. REMOVE FRONT SUSPENSION UPPER BRACE CENTER

(a) Remove the 2 nuts and upper brace.

4. REMOVE V−BANK COVER SUB−ASSY (See page 10−18)

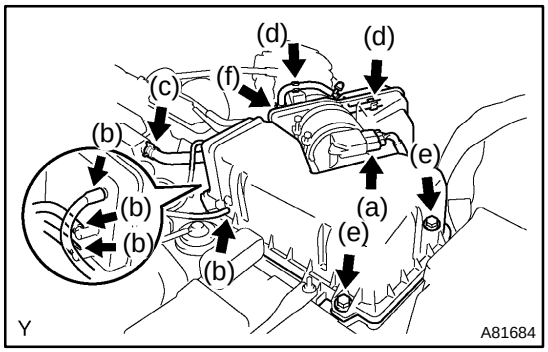

5. REMOVE AIR CLEANER CAP SUB−ASSY

(a) Disconnect the MAF meter connector.

(b) Disconnect the 4 vacuum hoses.

(c) Disconnect the ventilation hose No. 2.

(d) Remove the fuel vapor feed hose from the 2 hose clamps.

(e) Loosen the 2 air cleaner cap bolts.

(f) Loosen the air cleaner hose clamp bolt, and remove the air cleaner cap.

(g) Remove the air cleaner filter element.

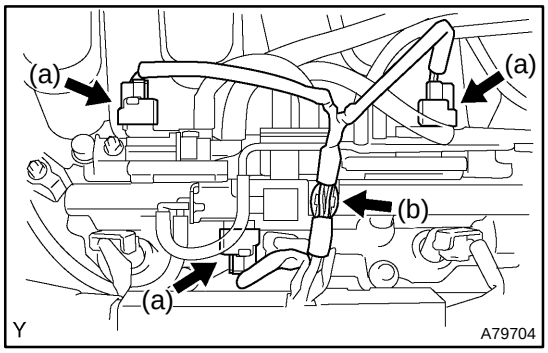

6. REMOVE EMISSION CONTROL VALVE SET (1MZ−FE ENGINE TYPE)

(a) Disconnect the 3 VSV connectors.

(b) Remove the wire harness clamp.

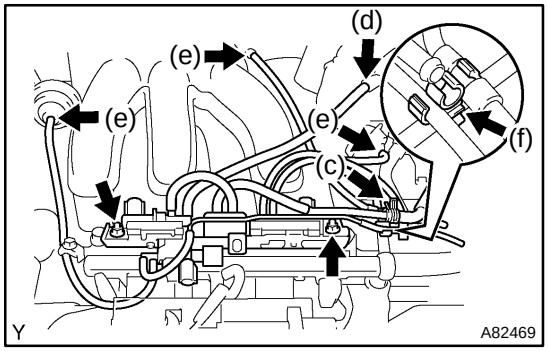

(c) Disconnect the fuel vapor feed hose No. 1.

(d) Disconnect the fuel vapor feed hose No. 2.

(e) Disconnect the 3 vacuum hoses.

(f) Remove the clamp.

(g) Remove the 2 nuts, and then remove the emission control valve set.

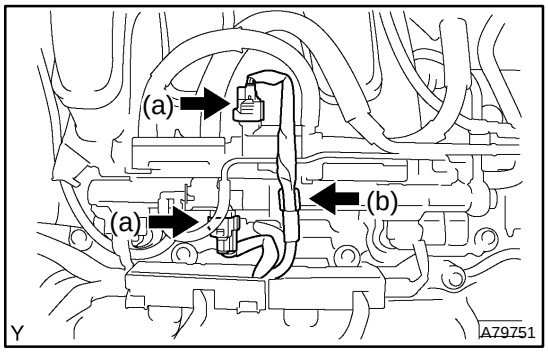

7. REMOVE EMISSION CONTROL VALVE SET (3MZ−FE ENGINE TYPE)

(a) Disconnect the 2 VSV connectors.

(b) Remove the wire harness clamp.

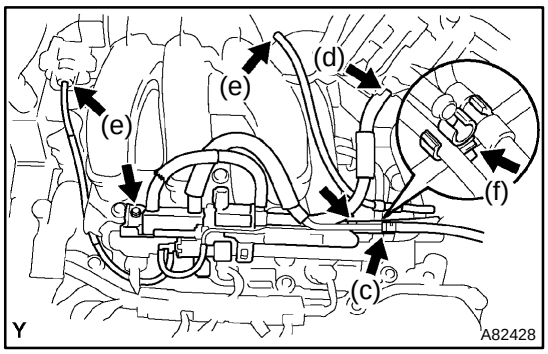

(c) Disconnect the fuel vapor feed hose No. 1.
(d) Disconnect the fuel vapor feed hose No. 2.
(e) Disconnect the 2 vacuum hoses.
(f) Remove the clamp.
(g) Remove the 2 nuts and the emission control valve set.

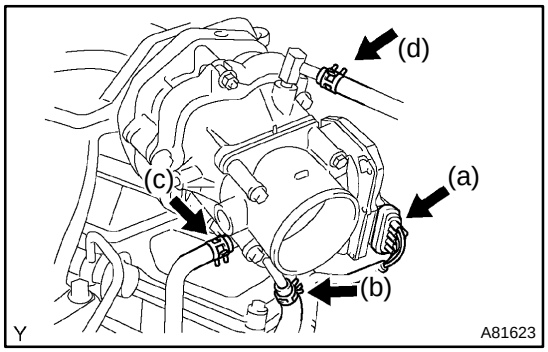

8. REMOVE INTAKE AIR SURGE TANK

(a) Disconnect the throttle motor connector.
(b) Disconnect the water bypass hose No. 3.
(c) Disconnect the water bypass hose No. 2.
(d) Disconnect the union to check valve hose.

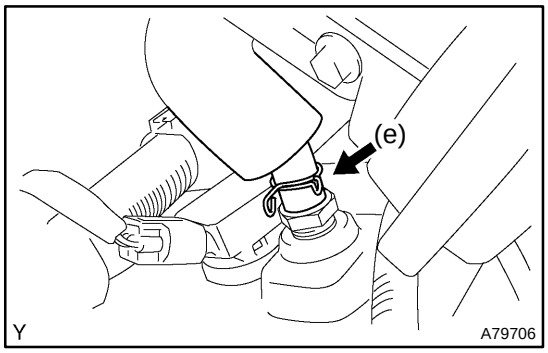

(e) Disconnect the ventilation hose.

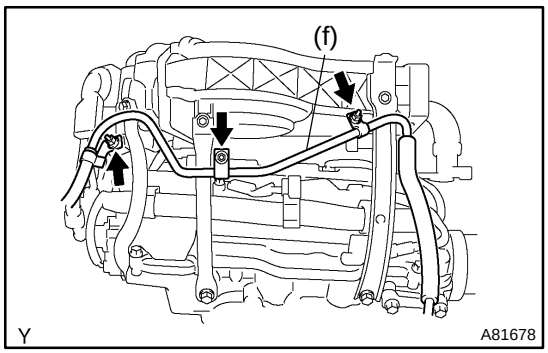

(f) Remove the 3 nuts and separate the pressure feed tube.

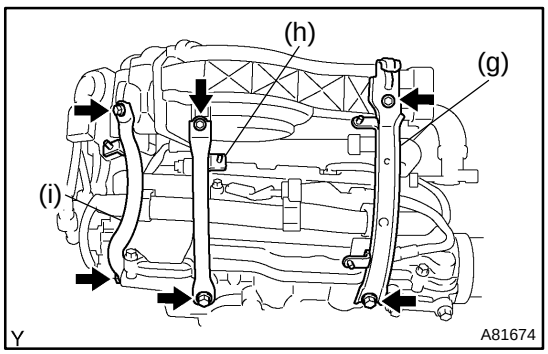

(g) Remove the 2 bolts and engine hunger No. 1.
(h) Remove the 2 bolts and surge tank stay No. 1.
(i) Remove the 2 bolts and surge tank stay No. 2.

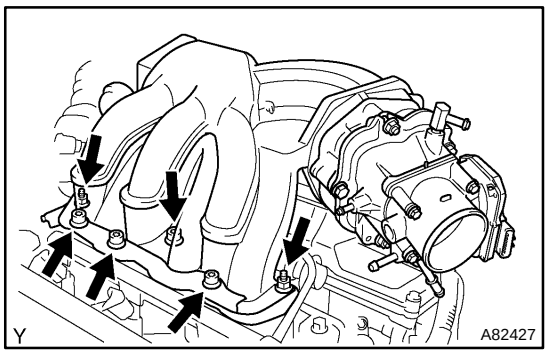

(j) Using a socket hexagon wrench 8, remove the 4 bolts.
(k) Remove the 2 nuts, emission control valve bracket and intake air surge tank.
(l) Remove the gasket from the intake air surge tank.

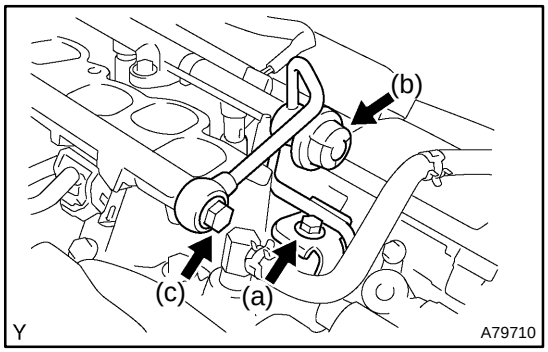

9. SEPARATE FUEL PIPE SUB−ASSY NO.1

(a) Remove the bolt and disconnect the fuel pipe No. 1.
(b) Remove the fuel pressure pulsation damper and 2 gaskets.
(c) Remove the fuel pipe No. 2 union bolt and 2 gaskets.

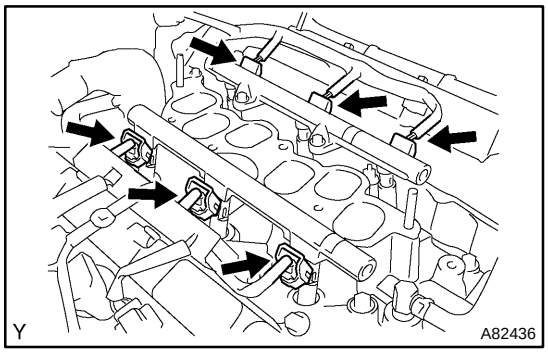

10. REMOVE FUEL INJECTOR ASSY

(a) Disconnect the 6 fuel injector connectors.

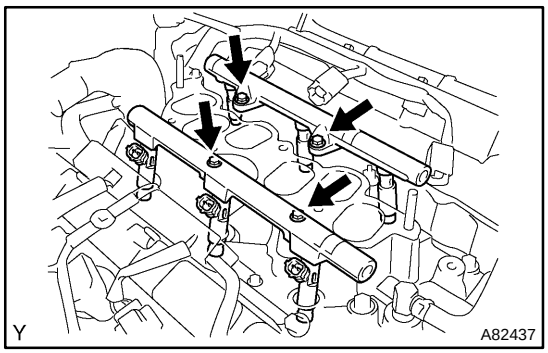

(b) Remove the 4 bolts and 2 fuel delivery pipes together with the 6 fuel injectors.

NOTICE:

Be careful not to drop the fuel injectors when removing the fuel delivery pipe.

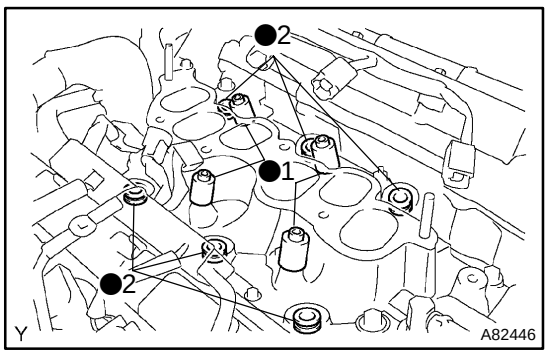

(c) Remove the 4 delivery pipe No. 1 spacers (●1) and 6 insulators (●2) from the intake manifold.

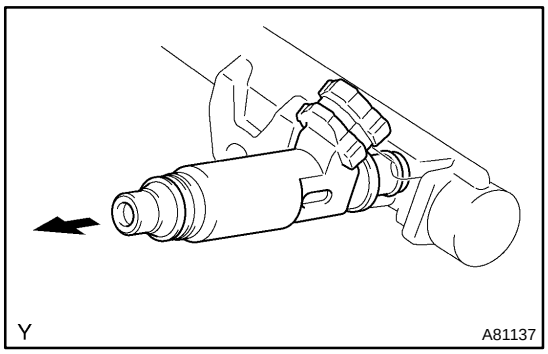

(d) Pull out the fuel injector from the fuel delivery pipe.

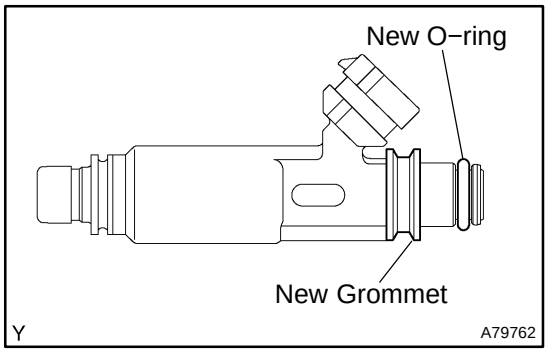

11. INSTALL FUEL INJECTOR ASSY

(a) Install a new grommet to each injector.

(b) Apply a light coat of grease or gasoline to a new O−ring, and install it to each injector.

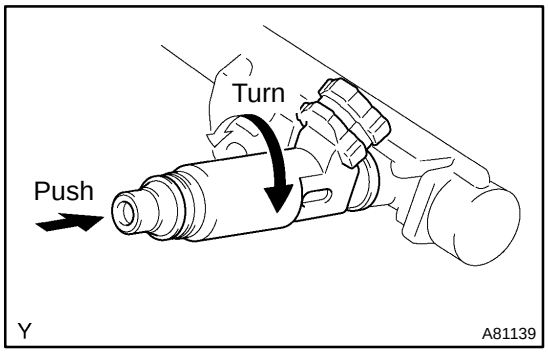

(c) Apply a light coat of grease or gasoline on the place where the fuel delivery pipe contacts the O−ring.

(d) Push the fuel injector while twisting it back and forth to install it in the fuel delivery pipe.

NOTICE:

- **Be careful not to twist the O−ring.**
- **After installing the fuel injector, check that it turns smoothly. If not, reinstall it with a new O−ring.**

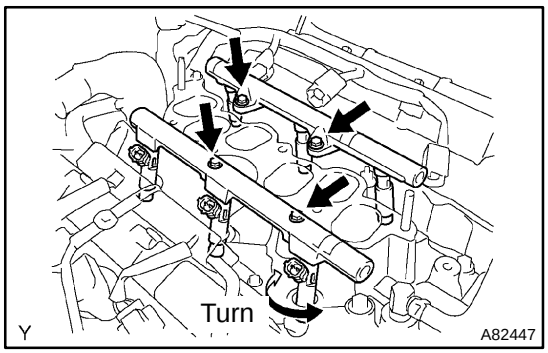

(e) Install 6 new insulators and the 4 delivery pipe No. 1 spacers to the intake manifold.

(f) Place the 2 fuel delivery pipes and the 6 fuel injectors together on the intake manifold.

NOTICE:

Be careful not to drop the fuel injectors when installing the fuel delivery pipe.

(g) Temporarily install the 4 bolts which are used to attach the fuel delivery pipe to the intake manifold.

NOTICE:

After installing the fuel injector, check that it turns smoothly. If not, reinstall it with a new O−ring.

(h) Tighten the 4 bolts.
Torque: 10 N·m (102 kgf·cm, 7 ft·lbf)

(i) Connect the 6 fuel injector connectors.

12. INSTALL FUEL PIPE SUB−ASSY NO.1

(a) Install 2 new gaskets and the fuel pipe No. 2 union bolt.
Torque: 33 N·m (337 kgf·cm, 24 ft·lbf)

(b) Install 2 new gaskets and the fuel pressure pulsation damper.
Torque: 33 N·m (337 kgf·cm, 24 ft·lbf)

(c) Install the fuel pipe No. 1 with the bolt.
Torque: 20 N·m (204 kgf·cm, 14 ft·lbf)

13. INSTALL INTAKE AIR SURGE TANK

(a) Install a new gasket to the intake air surge tank.
(b) Install the intake air surge tank and emission control valve bracket with the 2 nuts.
Torque: 28 N·m (286 kgf·cm, 21 ft·lbf)
(c) Using a socket hexagon wrench 8, tighten the 4 bolts.
Torque: 28 N·m (286 kgf·cm, 21 ft·lbf)
(d) Install the surge tank stay No. 2 with the 2 bolts.
Torque: 20 N·m (204 kgf·cm, 14 ft·lbf)
(e) Install the surge tank stay No. 1 with the 2 bolts.
Torque: 20 N·m (204 kgf·cm, 14 ft·lbf)
(f) Install the engine hunger No. 1 with the 2 bolts.
Torque: 20 N·m (204 kgf·cm, 14 ft·lbf)
(g) Install the pressure feed tube with the 3 nuts.
Torque: 7.8 N·m (80 kgf·cm, 69 in.·lbf)
(h) Connect the ventilation hose.
(i) Connect the union to check valve hose.
(j) Connect the water bypass hose No. 2.
(k) Connect the water bypass hose No. 3.
(l) Connect the throttle motor connector.

14. INSTALL EMISSION CONTROL VALVE SET (1MZ−FE ENGINE TYPE)
Torque: 8.0 N·m (82 kgf·cm, 71 in.·lbf)

15. INSTALL EMISSION CONTROL VALVE SET (3MZ−FE ENGINE TYPE)
Torque: 8.0 N·m (82 kgf·cm, 71 in.·lbf)

16. INSTALL AIR CLEANER CAP SUB−ASSY
Torque: 5.0 N·m (51 kgf·cm, 44 in.·lbf)

17. CHECK CONNECTION OF VACUUM HOSE

18. ADD ENGINE COOLANT (See page 16−27)

19. CHECK FOR ENGINE COOLANT LEAKS (See page 16−21)

20. CHECK FOR FUEL LEAKS (See page 11−29)

21. INSTALL V−BANK COVER SUB−ASSY (See page 10−18)

22. INSTALL FRONT SUSPENSION UPPER BRACE CENTER

(a) Install the upper brace with the 2 nuts.
Torque: 80 N·m (815 kgf·cm, 59 ft·lbf)

FUEL PUMP ASSY (1MZ−FE/3MZ−FE)

110XL−02

COMPONENTS

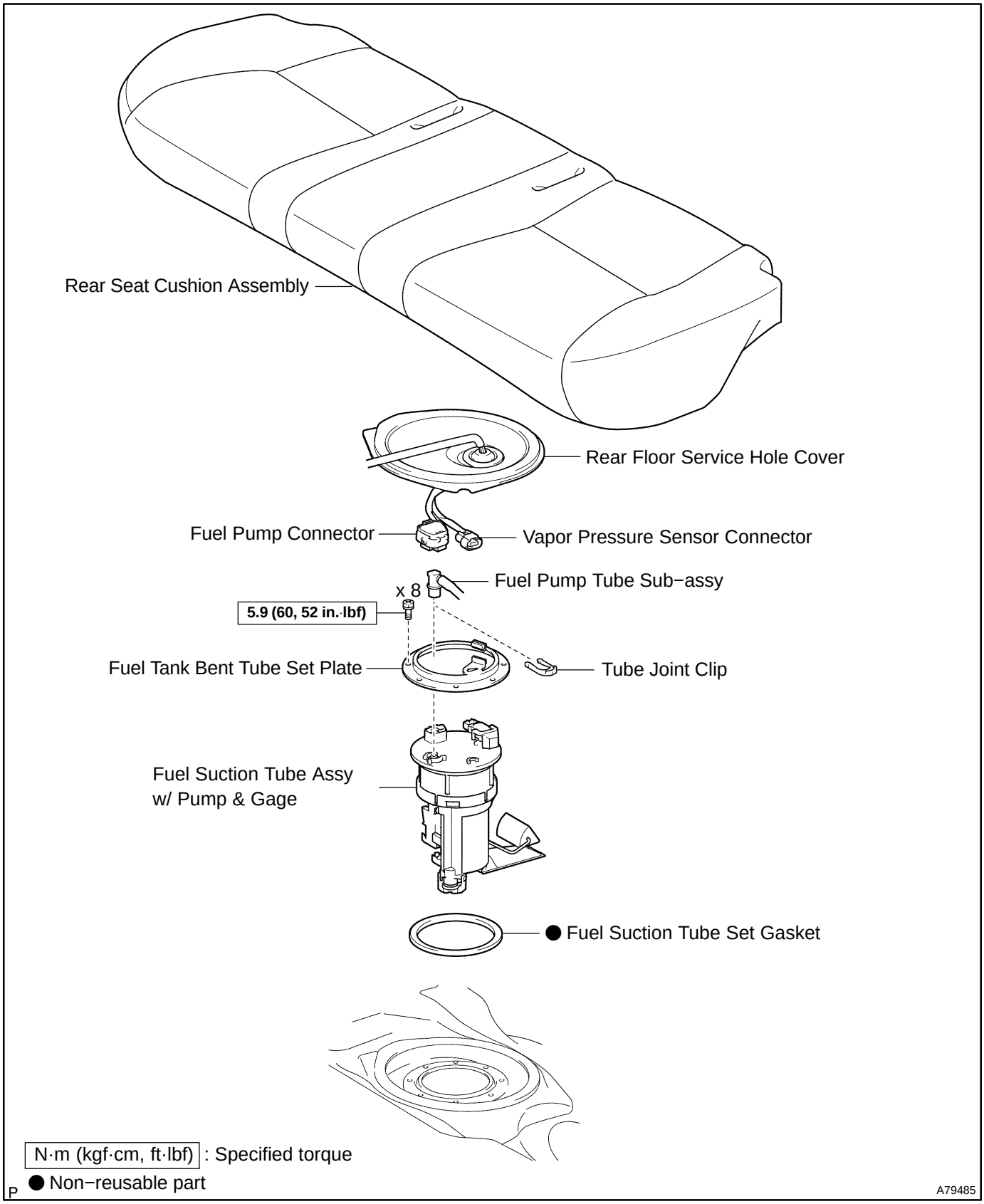

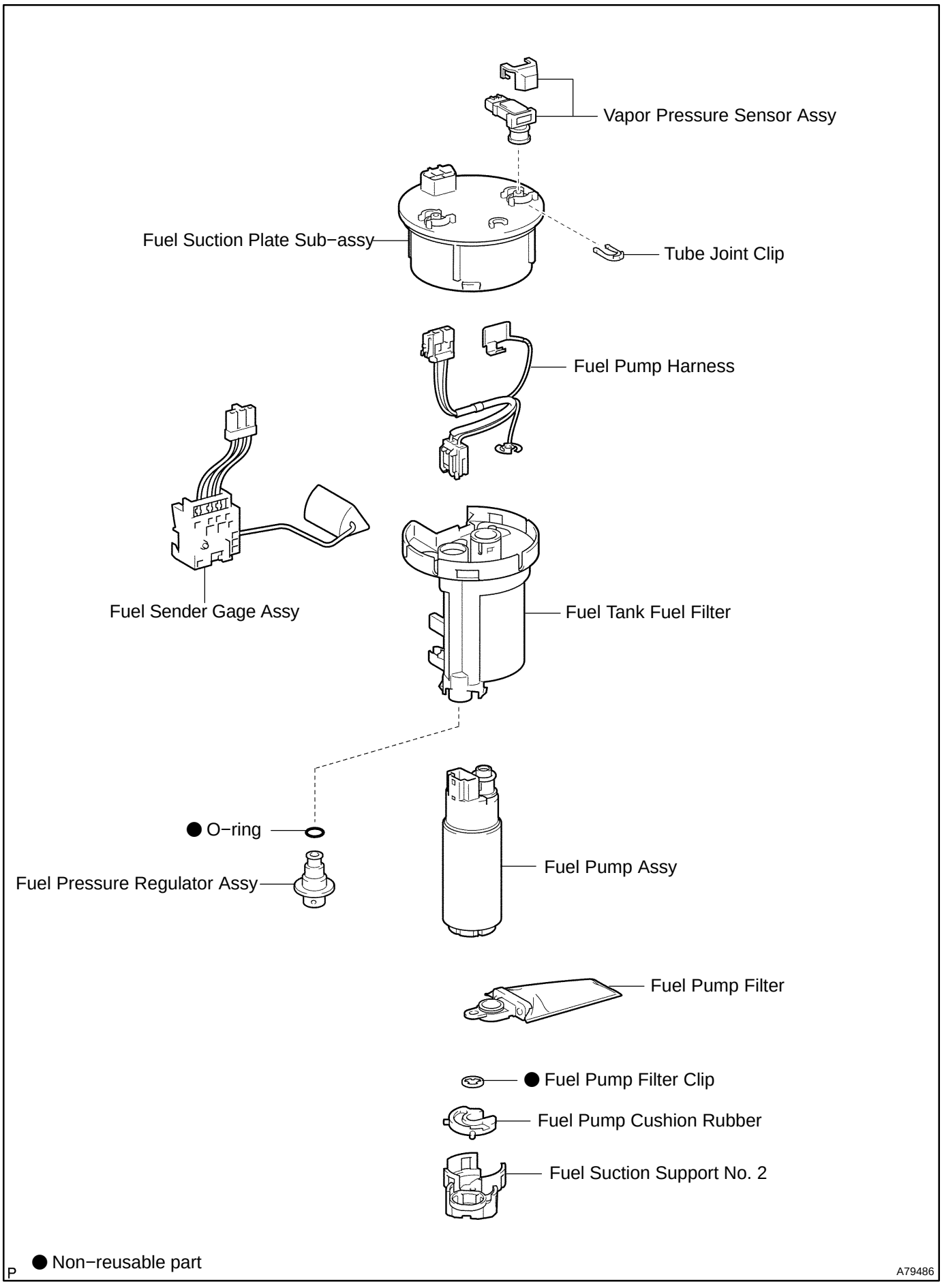
Vapor Pressure Sensor Assy
Fuel Suction Plate Sub−assy
Tube Joint Clip
Fuel Pump Harness
Fuel Sender Gage Assy
Fuel Tank Fuel Filter
● O−ring
Fuel Pressure Regulator Assy
Fuel Pump Assy
Fuel Pump Filter
● Fuel Pump Filter Clip
Fuel Pump Cushion Rubber
Fuel Suction Support No. 2
● Non−reusable part
P
A79486

110XO−03

REPLACEMENT

1. **DISCHARGE FUEL SYSTEM PRESSURE (See page 11−26)**
2. **REMOVE REAR SEAT CUSHION ASSEMBLY (See page 72−32)**

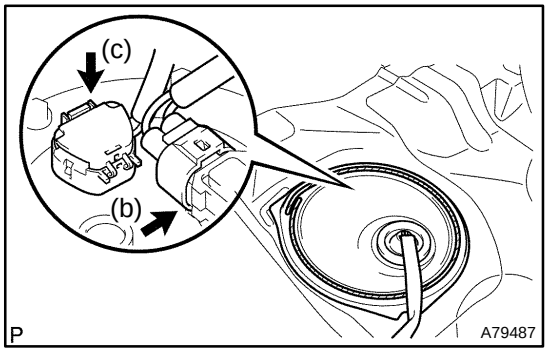

3. **REMOVE REAR FLOOR SERVICE HOLE COVER**

(a) Remove the rear floor service hole cover.
(b) Disconnect the vapor pressure sensor connector.
(c) Disconnect the fuel pump connector.

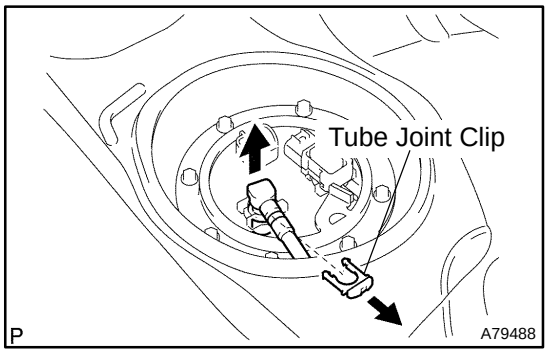

4. **SEPARATE FUEL PUMP TUBE SUB−ASSY**

(a) Remove the tube joint clip, and pull out the fuel pump tube.

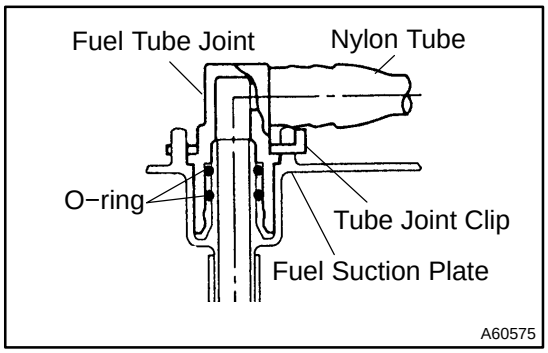

NOTICE:

- **Before this operation, check the connector for dirt, mud or other contamination.**
- **Be careful of mud. The connector's O−ring, which seals the pipe and connector, becomes contaminated easily.**
- **Do not use any tools in this operation.**
- **Do not bend or twist the nylon tube. Protect the connector by covering it with a vinyl or plastic bag.**
- **When the pipe and the connector are stuck, push and pull the connector to release it. Then pull out the connector from the pipe.**

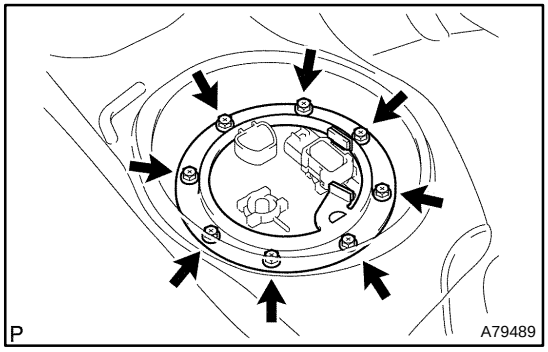

5. **REMOVE FUEL TANK VENT TUBE SET PLATE**

(a) Remove the 8 bolts and the set plate.

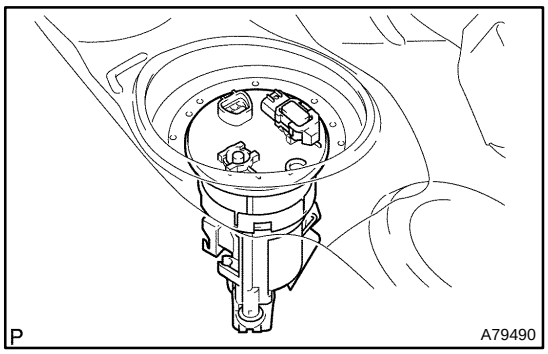

6. REMOVE FUEL SUCTION TUBE ASSY W/ PUMP & GAGE

(a) Remove the fuel suction tube from the fuel tank.

NOTICE:

- **Do not damage the fuel pump filter.**
- **Do not bend the arm of the fuel sender gage.**

(b) Remove the gasket from the fuel suction tube.

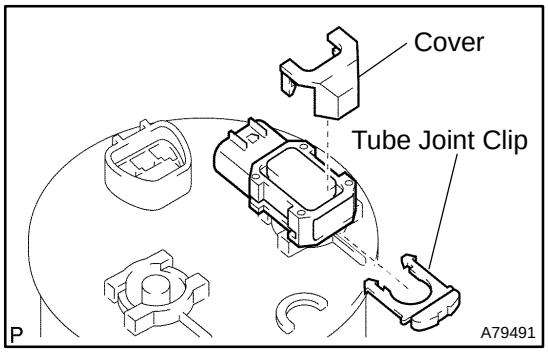

7. REMOVE VAPOR PRESSURE SENSOR ASSY

(a) Remove the cover.

(b) Remove the tube joint clip, and pull out the vapor pressure sensor.

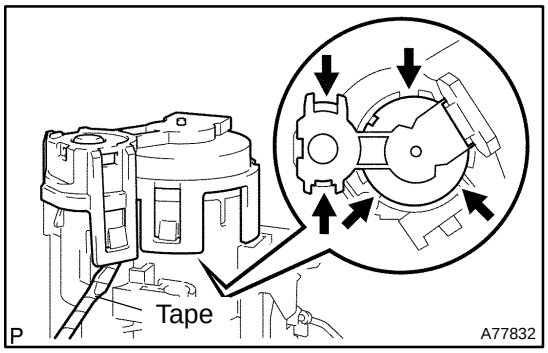

8. REMOVE FUEL SUCTION SUPPORT NO.2

(a) Using a screwdriver with its tip wrapped in tape, detach the 5 snap claws from the claw holes, and remove the fuel suction support.

NOTICE:

Do not damage the fuel suction support.

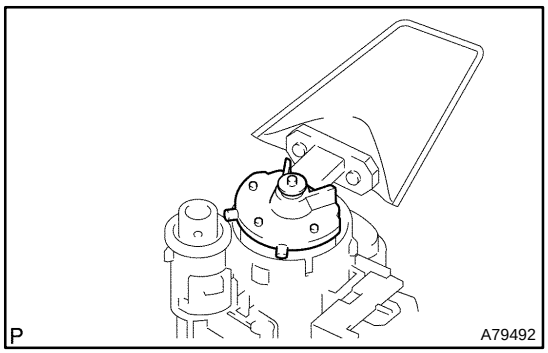

9. REMOVE FUEL PUMP CUSHION RUBBER

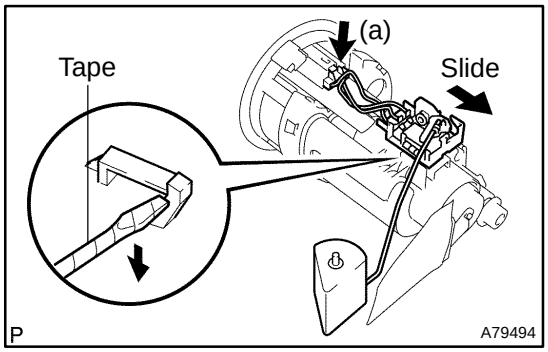

10. REMOVE FUEL SENDER GAGE ASSY

(a) Disconnect the fuel sender gage connector.

(b) Using a screwdriver with its tip wrapped in tape, unfasten the clamp to release the fuel sender gage. Slide the fuel sender gage to remove it from the fuel pump.

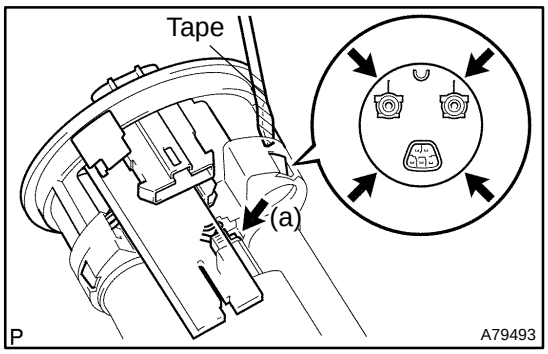

11. REMOVE FUEL SUCTION PLATE SUB−ASSY

(a) Disconnect the fuel pump connector.

(b) Using a screwdriver with its tip wrapped in tape, detach the 4 snap claws from the claw holes, and pull out the fuel suction plate.

NOTICE:

Do not damage the fuel suction support.

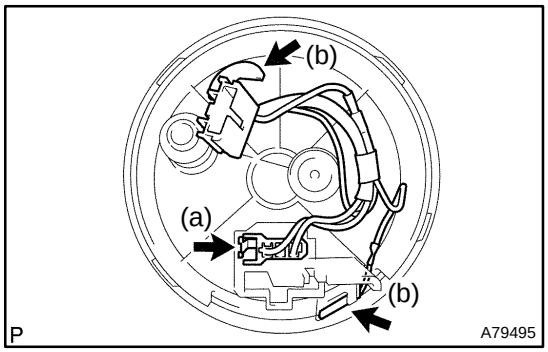

12. REMOVE FUEL PUMP HARNESS

(a) Disconnect the connector.

(b) Using a small screwdriver, pry out the fuel pump harness.

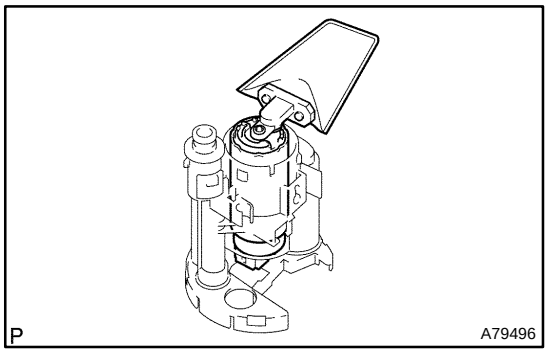

13. REMOVE FUEL PUMP

(a) Pull out the fuel pump from the fuel tank fuel filter.

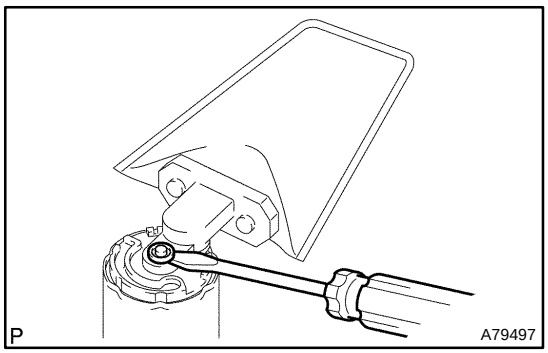

14. REMOVE FUEL PUMP FILTER

(a) Using a small screwdriver, pry out the clip.

(b) Pull out the fuel pump filter from the fuel pump.

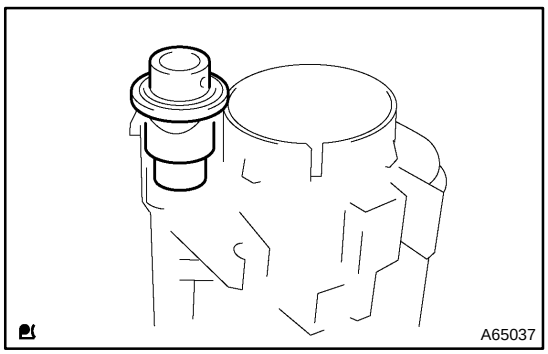

15. REMOVE FUEL PRESSURE REGULATOR ASSY

(a) Pull out the fuel pressure regulator from the fuel tank fuel filter.

(b) Remove the O−ring from the fuel pressure regulator.

16. INSTALL FUEL PRESSURE REGULATOR ASSY

(a) Apply a light coat of gasoline or grease to a new O−ring, and install it to the fuel pressure regulator.

(b) Push in the fuel pressure regulator to the fuel tank fuel filter.

17. INSTALL FUEL PUMP FILTER

(a) Install the fuel pump filter with a new clip.

18. INSTALL FUEL PUMP

(a) Apply a light coat of gasoline or grease to the O−ring of the fuel pump.

(b) Push in the fuel pump to the fuel tank fuel filter.

19. INSTALL FUEL PUMP HARNESS

20. INSTALL FUEL SUCTION PLATE SUB−ASSY

21. INSTALL FUEL SENDER GAGE ASSY

22. INSTALL FUEL PUMP CUSHION RUBBER

23. INSTALL FUEL SUCTION SUPPORT NO.2

24. INSTALL VAPOR PRESSURE SENSOR ASSY

25. INSTALL FUEL SUCTION TUBE ASSY W/ PUMP & GAGE

(a) Install a new gasket to the fuel suction tube.

(b) Install the fuel suction tube.

NOTICE:

- **Do not damage the fuel pump filter.**
- **Do not bend the arm of the fuel sender gage.**

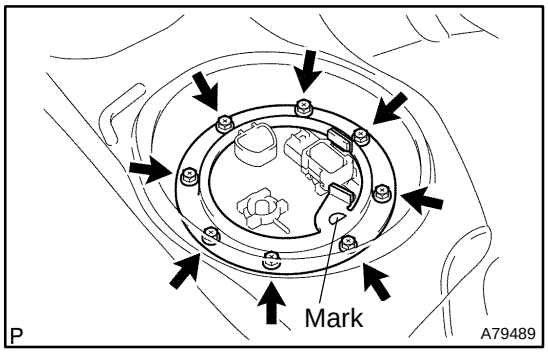

26. INSTALL FUEL TANK VENT TUBE SET PLATE

(a) Align the mark of the set plate with the fuel suction tube.

(b) Install the set plate with the 8 bolts.

Torque: 5.9 N·m (60 kgf·cm, 52 in.·lbf)

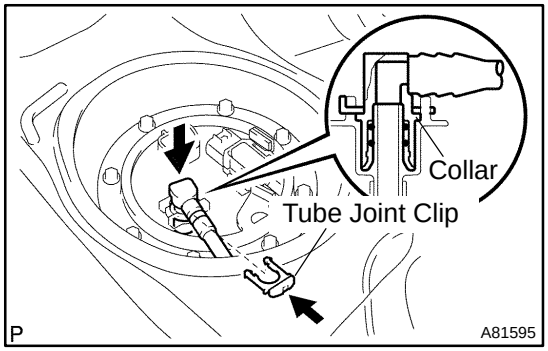

27. CONNECT FUEL PUMP TUBE SUB−ASSY

(a) Install the fuel pump tube with the tube joint clip.

NOTICE:

- **Check that there are no scratches or foreign objects on the connecting part.**
- **Check that the fuel tube joint is inserted securely.**
- **Check that the tube joint clip is on the collar of the fuel tube joint.**
- **After installing the tube joint clip, check that the fuel tube joint has not been pulled off.**

28. CHECK FOR FUEL LEAKS (See page 11−29)

29. INSTALL REAR FLOOR SERVICE HOLE COVER

30. INSTALL REAR SEAT CUSHION ASSEMBLY (See page 72−32)

FUEL TANK ASSY (1MZ−FE/3MZ−FE)

110XN−02

COMPONENTS

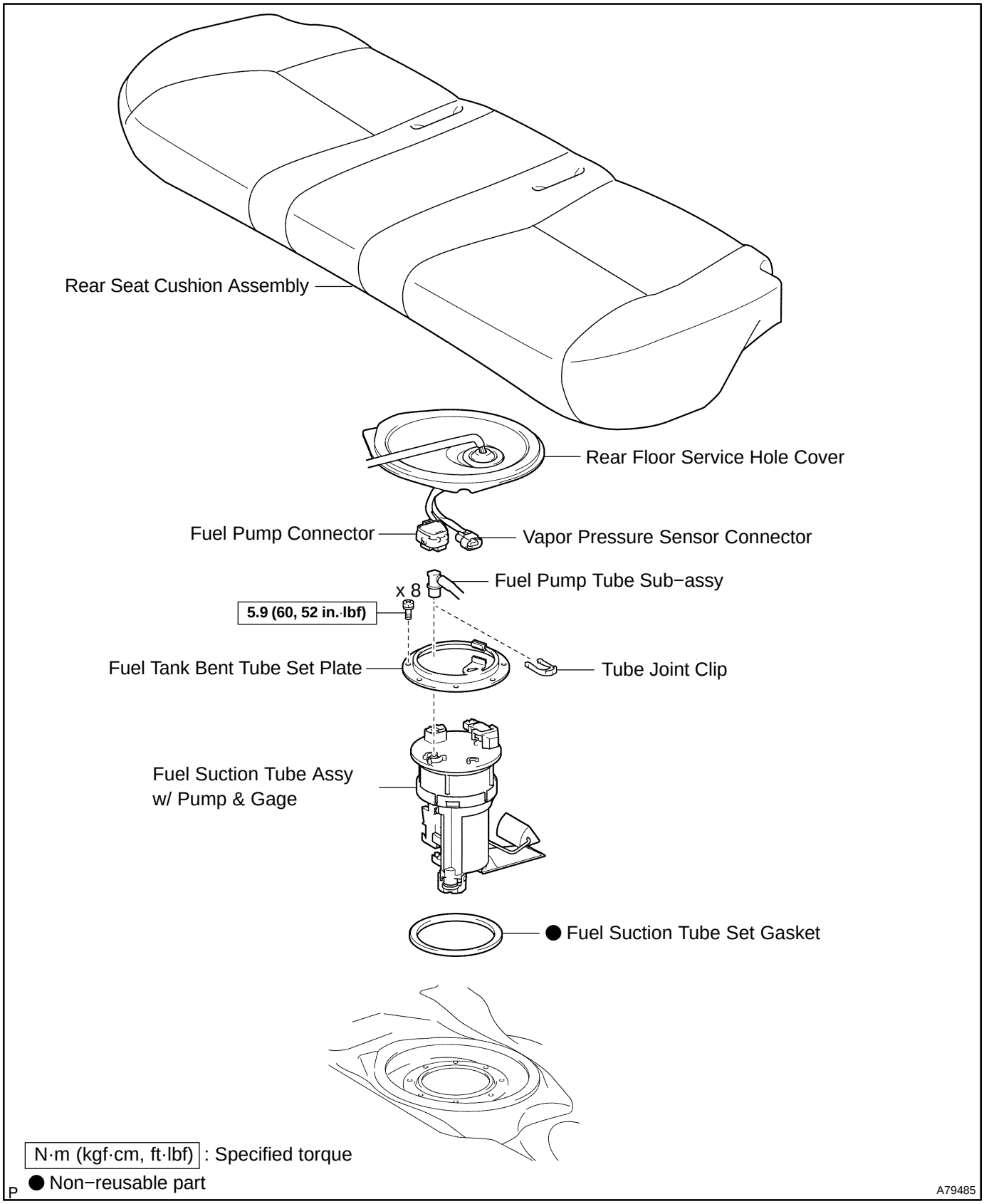

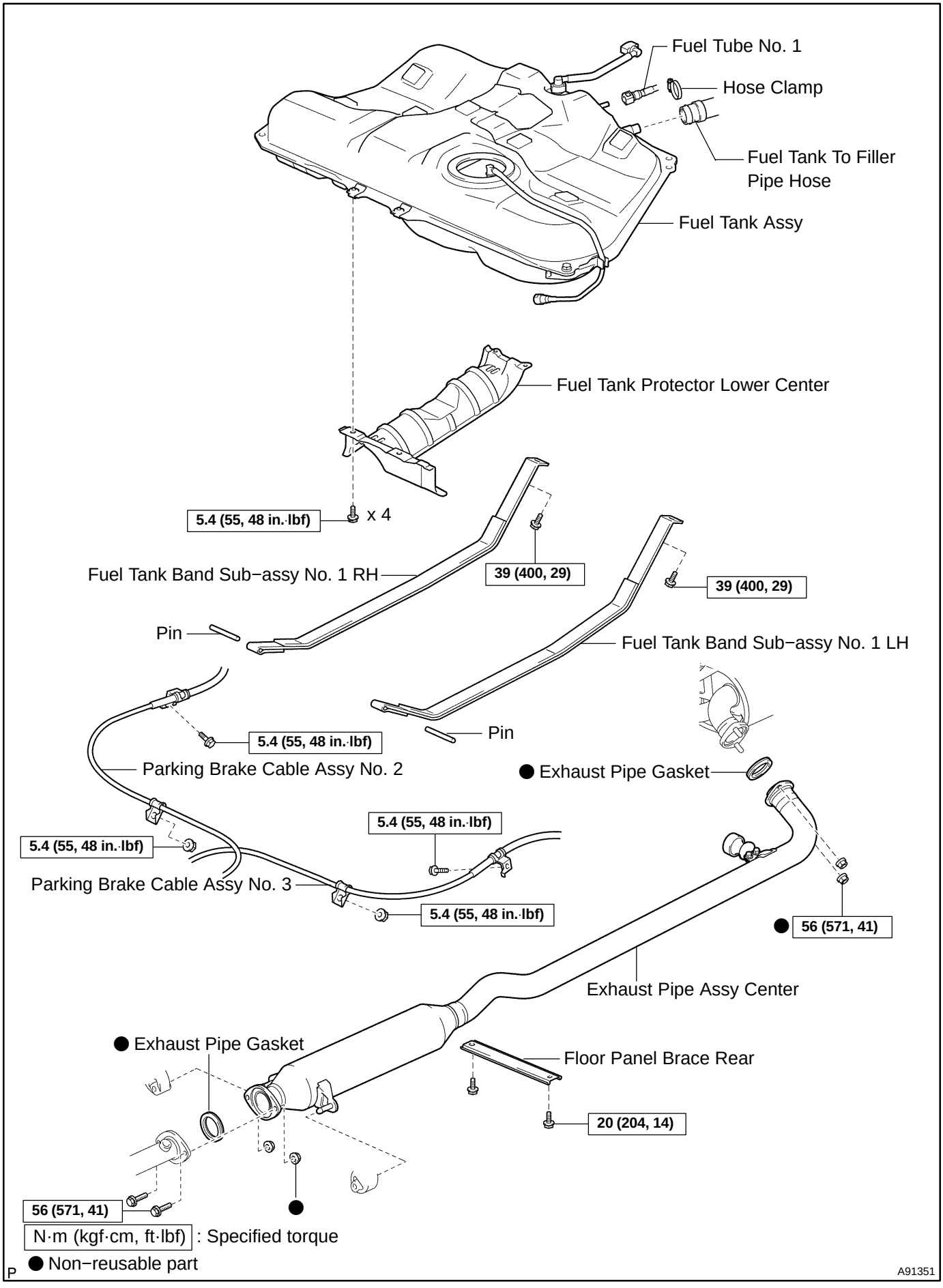
Fuel Tube No. 1
Hose Clamp
Fuel Tank To Filler Pipe Hose
Fuel Tank Assy
Fuel Tank Protector Lower Center
5.4 (55, 48 in.·lbf)
x 4
Fuel Tank Band Sub−assy No. 1 RH
39 (400, 29)
39 (400, 29)
Pin
Fuel Tank Band Sub−assy No. 1 LH
Pin
5.4 (55, 48 in.·lbf)
Parking Brake Cable Assy No. 2
● Exhaust Pipe Gasket
5.4 (55, 48 in.·lbf)
5.4 (55, 48 in.·lbf)
Parking Brake Cable Assy No. 3
5.4 (55, 48 in.·lbf)
● 56 (571, 41)
Exhaust Pipe Assy Center
● Exhaust Pipe Gasket
Floor Panel Brace Rear
20 (204, 14)
56 (571, 41)
N·m (kgf·cm, ft·lbf) : Specified torque
● Non−reusable part
P
A91351

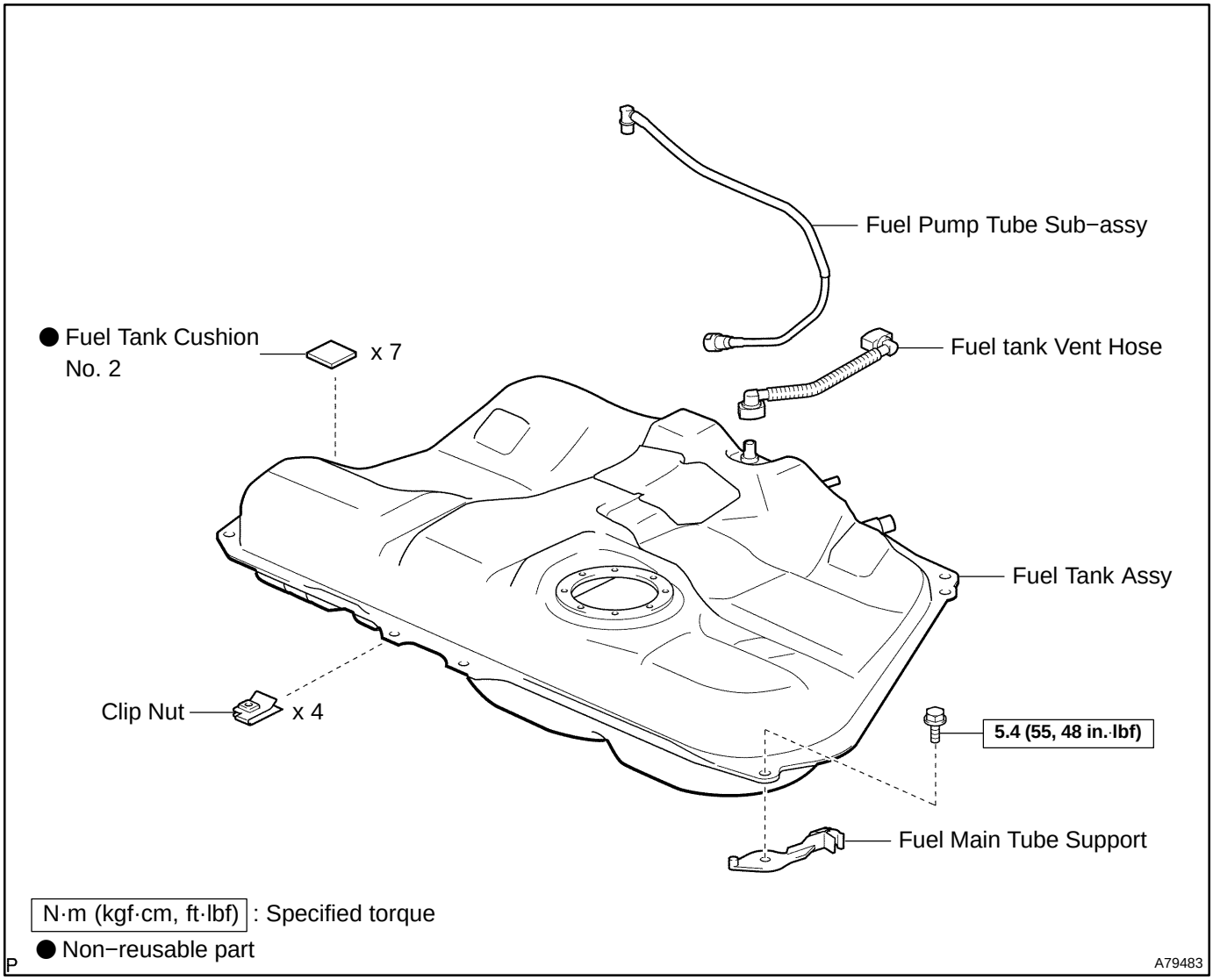
Fuel Pump Tube Sub−assy
● Fuel Tank Cushion No. 2
x 7
Fuel tank Vent Hose
Fuel Tank Assy
Clip Nut
x 4
5.4 (55, 48 in.·lbf)
Fuel Main Tube Support
N·m (kgf·cm, ft·lbf) : Specified torque
● Non−reusable part
A79483

110XK−03

REPLACEMENT

1. **DISCHARGE FUEL SYSTEM PRESSURE (See page 11−26)**
2. **REMOVE REAR SEAT CUSHION ASSEMBLY (See page 72−32)**
3. **REMOVE REAR FLOOR SERVICE HOLE COVER (See page 11−45)**
4. **SEPARATE FUEL PUMP TUBE SUB−ASSY (See page 11−45)**
5. **REMOVE FUEL TANK VENT TUBE SET PLATE (See page 11−45)**
6. **REMOVE FUEL SUCTION TUBE ASSY W/ PUMP & GAGE (See page 11−45)**
7. **DRAIN FUEL**
8. **REMOVE FLOOR PANEL BRACE REAR (See page 15−7)**
9. **REMOVE EXHAUST PIPE ASSY CENTER**

(a) Remove the 2 bolts, 4 nuts, exhaust pipe and 2 gaskets.

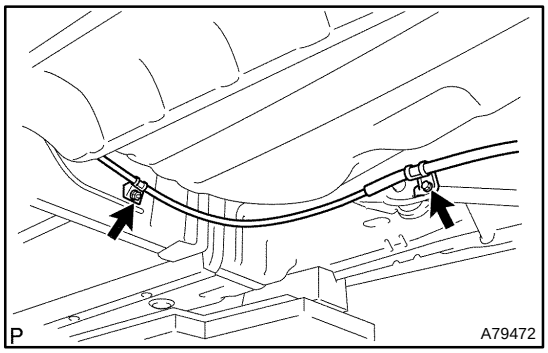

10. **DISCONNECT PARKING BRAKE CABLE ASSY NO.2**

(a) Remove the set bolt and the set nut of the parking brake cable.

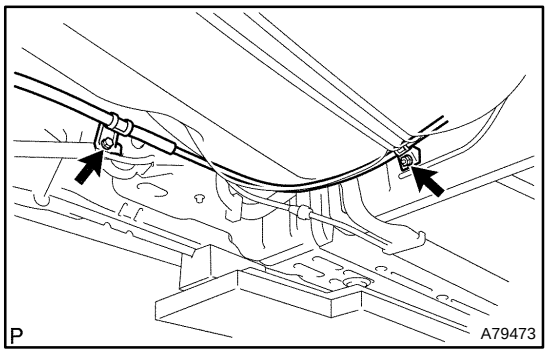

11. **DISCONNECT PARKING BRAKE CABLE ASSY NO.3**

(a) Remove the set bolt and the set nut of the parking brake cable.

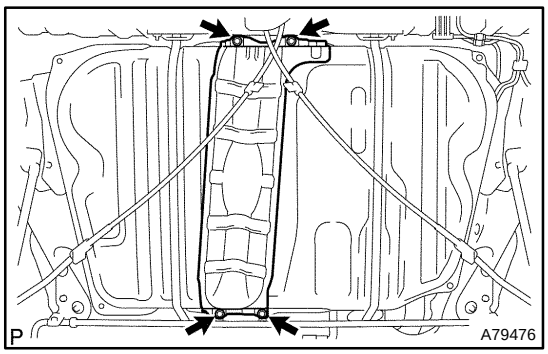

12. **REMOVE FUEL TANK PROTECTOR LOWER CENTER**

(a) Remove the 4 bolts and fuel tank protector.

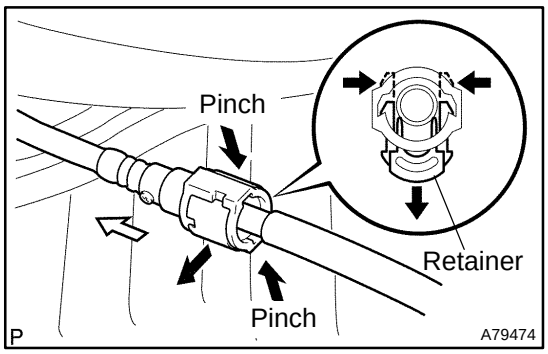

13. REMOVE FUEL TANK ASSY

(a) Disconnect the fuel pump tube.

(1) Pinch the tab of the retainer to remove the lock claws and pull down it as shown in the illustration.

(2) Pull out the fuel tank main tube.

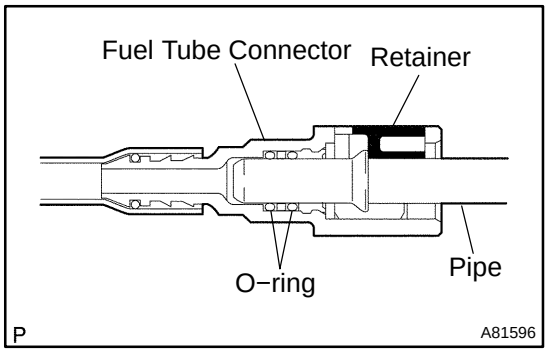

NOTICE:

- **Before this operation, check the connector for dirt, mud or other contamination.**
- **Be careful of mud. The connector's O−ring, which seals the pipe and connector, becomes contaminated easily.**
- **Do not use any tools in this operation.**
- **Do not bend or twist the nylon tube. Protect the connector by covering it with a vinyl or plastic bag.**
- **When the pipe and connector are stuck, push and pull the connector to release it. Then pull out the connector from the pipe.**

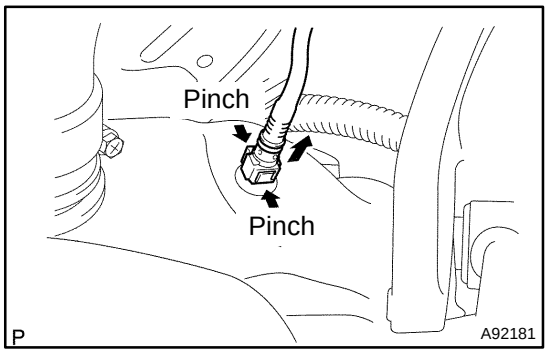

(b) Disconnect the fuel tube No. 1.

(1) Pinch the tube connector and then pull out the fuel tube No. 1.

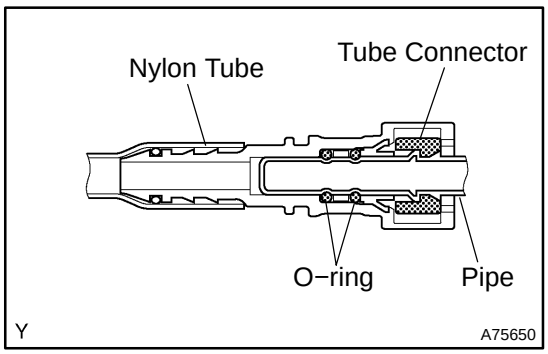

NOTICE:

- **Before this operation, check the connector for dirt, mud or other contamination.**
- **Be careful of mud. The connector's O−ring, which seals the pipe and connector, becomes contaminated easily.**
- **Do not use any tools in this operation.**
- **Do not bend or twist the nylon tube. Protect the connector by covering it with a vinyl or plastic bag.**
- **When the pipe and connector are stuck, push and pull the connector to release it. Then pull out the connector from the pipe.**

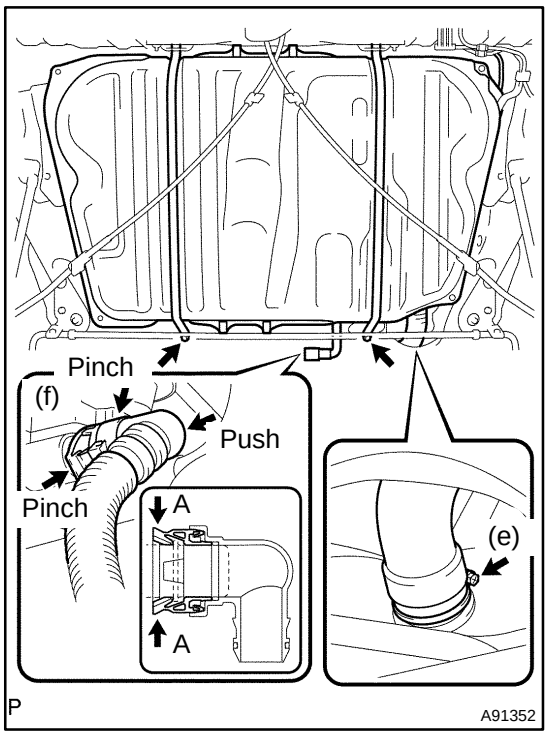

(c) Set up a transmission jack underneath the fuel tank.
(d) Remove the 2 set bolts of the fuel tank bands.
(e) Remove the hose clamp and disconnect the fuel tank to filler pipe hose.
(f) Disconnect the fuel tank vent hose from the charcoal canister.
  (1) Push the connector deep into the charcoal canister to release the locking pin.
  (2) Pinch portion A.
  (3) Pull out the connector.
(g) Remove the fuel tank.

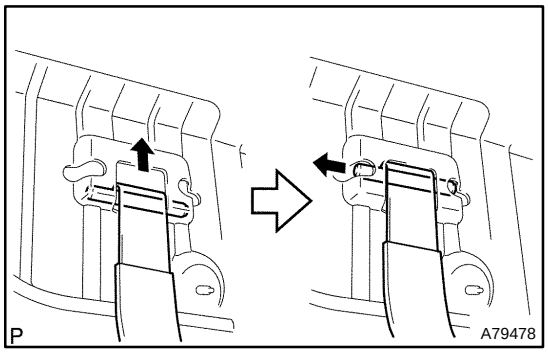

(h) Remove the 2 pins and 2 fuel tank bands as shown in the illustration.

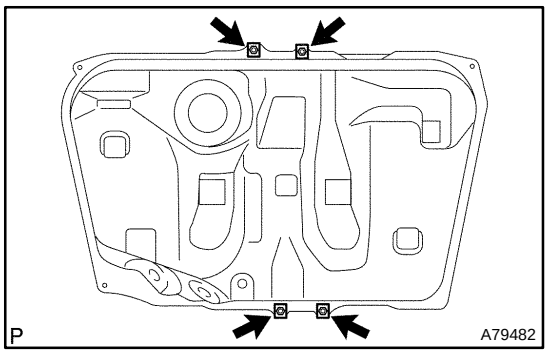

(i) Remove the 4 clip nuts.

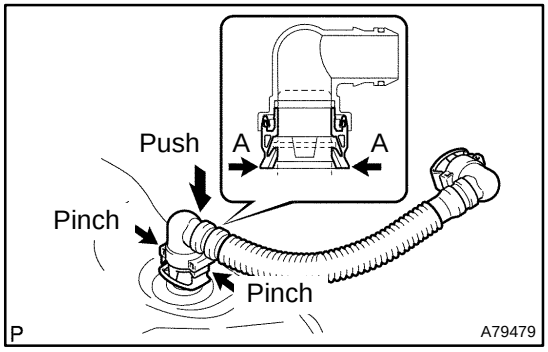

14. REMOVE FUEL TANK VENT HOSE

(a) Push the connector deep into the charcoal canister to release the locking pin.
(b) Pinch portion A.
(c) Pull out the connector.

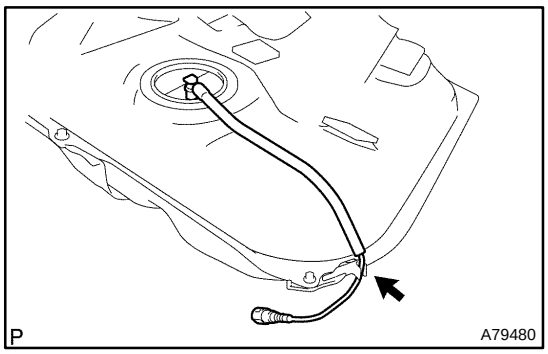

15. REMOVE FUEL PUMP TUBE SUB−ASSY

(a) Remove the fuel pump tube from the fuel main tube support.

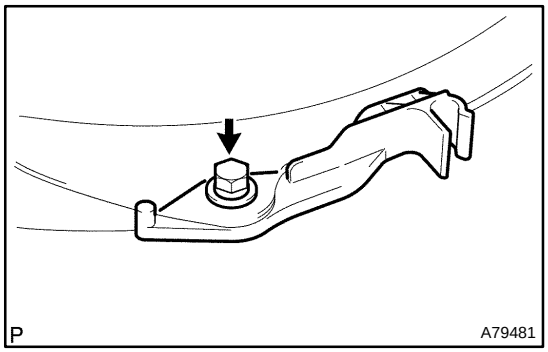

16. REMOVE FUEL MAIN TUBE SUPPORT

(a) Remove the bolt and tube support.

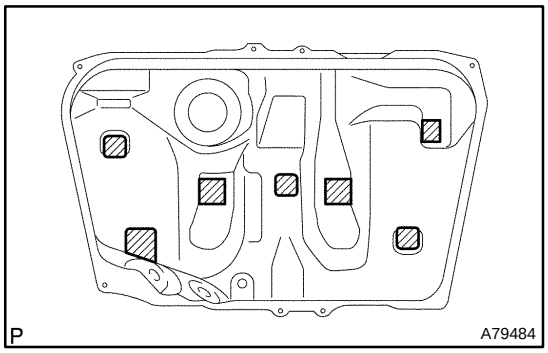

17. REMOVE FUEL TANK CUSHION NO.2

18. INSTALL FUEL TANK CUSHION NO.2

(a) Install 7 new fuel tank cushions to the fuel tank.

19. INSTALL FUEL MAIN TUBE SUPPORT

Torque: 5.4 N·m (55 kgf·cm, 48 in.·lbf)

20. INSTALL FUEL PUMP TUBE SUB−ASSY

21. INSTALL FUEL TANK VENT HOSE

22. INSTALL FUEL TANK ASSY

(a) Install the 4 clip nuts.

(b) Install the 2 fuel tank bands with the 2 pins.

(c) Connect the fuel tank vent hose.

(d) Connect the fuel tank inlet pipe with the fuel filler pipe clamp.

(e) Tighten the set 2 bolts of the fuel tank bands.

Torque: 39 N·m (400 kgf·cm, 29 ft·lbf)

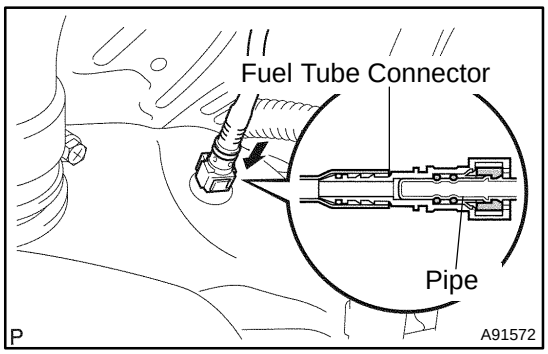

(f) Connect the fuel tube No. 1.

(1) Push the fuel tube connector into the pipe until fuel tube connector makes ”click” sound.

NOTICE:

- **Check if there is any damage or foreign objects on the connected part.**
- **After connecting, check if the fuel tube connector and the pipe are securely connected by trying to pull them apart.**

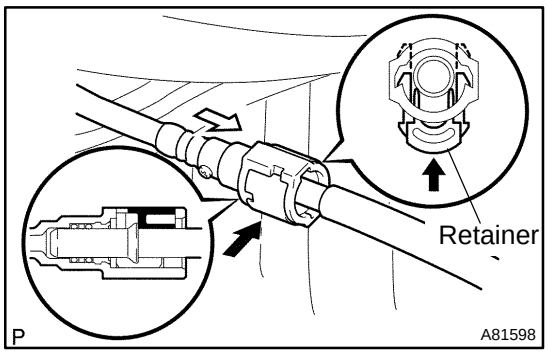

(g) Connect the fuel pump tube.
(1) Push in the fuel tube connector to the pipe until, and push up retainer to the claws lock.

NOTICE:

- **Check if there is any damage or foreign objects on the connected part.**
- **After connecting, check if the fuel tube connector and the pipe are securely connected by trying to pull them apart.**

23. INSTALL FUEL TANK PROTECTOR LOWER CENTER
Torque: 5.4 N·m (55 kgf·cm, 48 in.·lbf)
24. INSTALL PARKING BRAKE CABLE ASSY NO.3
Torque: 5.4 N·m (55 kgf·cm, 48 in.·lbf)
25. INSTALL PARKING BRAKE CABLE ASSY NO.2
Torque: 5.4 N·m (55 kgf·cm, 48 in.·lbf)
26. INSTALL EXHAUST PIPE ASSY CENTER
(a) Install 2 new gaskets and the exhaust pipe with the 2 bolts and 4 new nuts.
Torque: 56 N·m (571 kgf·cm, 41 ft·lbf)
27. INSTALL FUEL SUCTION TUBE ASSY W/ PUMP & GAGE (See page 11−45)
28. INSTALL FUEL TANK VENT TUBE SET PLATE (See page 11−45)
29. CONNECT FUEL PUMP TUBE SUB−ASSY (See page 11−45)
30. ADD FUEL
31. CHECK FOR FUEL LEAKS (See page 11−29)
32. CHECK FOR EXHAUST GAS LEAKS
33. INSTALL REAR FLOOR SERVICE HOLE COVER (See page 11−45)
34. INSTALL REAR SEAT CUSHION ASSEMBLY (See page 72−32)
35. INSTALL FLOOR PANEL BRACE REAR (See page 15−7)

EMISSION CONTROL SYSTEM (2AZ−FE)(From July, 2003)

120BJ−03

ON−VEHICLE INSPECTION

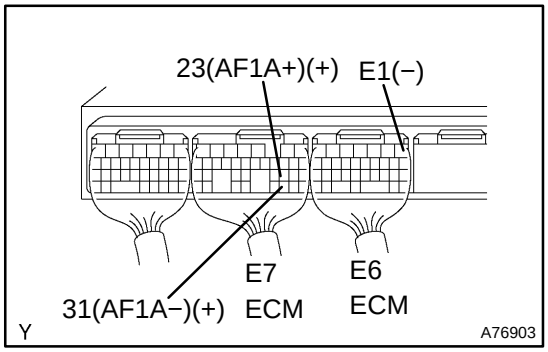

1. INSPECT AIR−FUEL RATIO COMPENSATION SYSTEM

(a) Measure the voltage between terminals of the engine ECM connectors.

Standard:

Tester Connection	Condition	Specified Condition
E7−23 (AF1A+) − E6−1(E1)	Ignition switch ON	3.3 V
E7−31 (AF1A−) − E6−1(E1)	Ignition switch ON	3.0 V

NOTICE:

Connect test leads to the connector's backside. The connectors should not be disconnected from the ECM.

HINT:

Voltage between the terminals of the ECM is kept constant regardless of the voltage of the A/F sensor.

(b) Connect the hand−held tester to the DLC3.

(c) Select "DATA MONITOR". Then select "A/FS B1 S1", "A/FS B2 S1" and "O2S B1 S2" to display the monitors.

(d) Warm up the A/F sensor with the engine speed at 2,500 rpm for approximately 2 minutes.

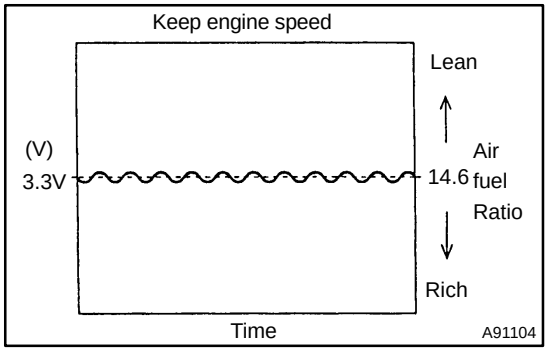

(e) Keep the engine speed at 2,500 rpm and confirm that the displays of "A/FS B1 S1" and "A/FS B2 S1" are as shown in the illustration.

HINT:

- The illustration may differ slightly from the display on the hand held tester.
- Only the hand−held tester displays the waveform of the A/F sensor.

(f) Confirm that the display of "O2S B1 S2" changes between 0 V to 1 V with the engine speed at 2,500 rpm.

2. INSPECT FUEL CUT OFF RPM

(a) Increase the engine speed to at least 3,500 rpm.

(b) Use a sound scope to check for injector operating sounds.

(c) Check that when the throttle lever is released, injector operation sounds stop momentarily (at 2,500 rpm) and then resume (at 1,400 rpm).

Standard:

Item	Specified Condition
Fuel cut off rpm	2,500 rpm
Fuel return rpm	1,400 rpm

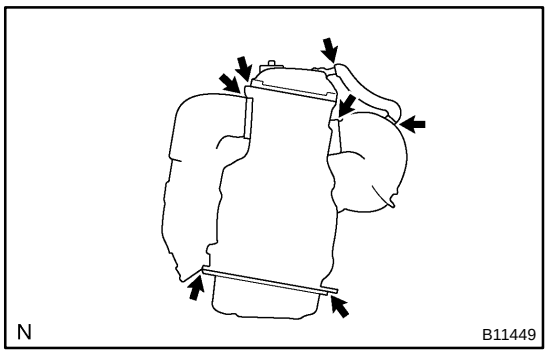

3. VISUALLY INSPECT HOSES, CONNECTIONS AND GASKETS

(a) Check for cracks, leaks or damage.

HINT:

Removal or problems with the engine oil dipstick, oil filler cap, PCV hose and other components may cause the engine to run improperly. Disconnection, looseness or cracks in the parts of the air induction system between the throttle body and cylinder head will allow air suction and cause the engine to run improperly.

If necessary, replace any damaged parts.

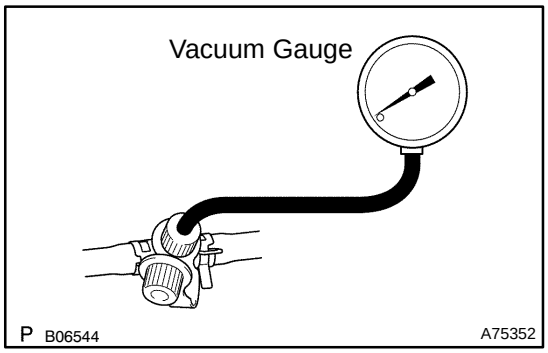

4. Using Hand−Held Tester:
INSPECT EVAP SYSTEM LINE

(a) Warm up and stop the engine.
  (1) Warm up the engine to normal operating temperature.

(b) Install a vacuum gauge (EVAP control system test equipment vacuum gauge) to the EVAP service port on the purge line.

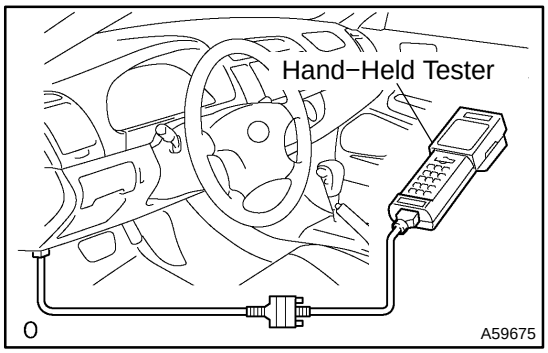

(c) Connect the hand−held tester to the DLC3.

(d) Start the engine.

(e) Turn the hand−held tester main switch ON.

(f) Use the ACTIVE TEST mode on the hand−held tester to operate the VSV for EVAP.

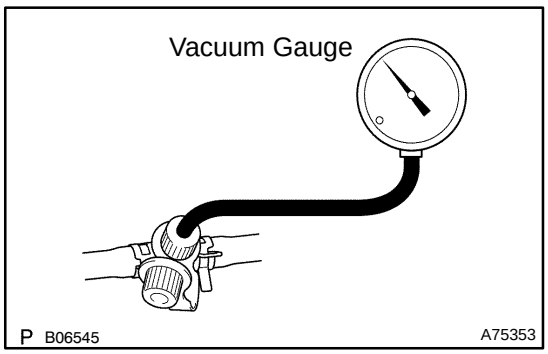

(g) Check the vacuum while the engine is idling.
  Standard:
  Maintain at 0.368 to 19.713 in.Hg (5 to 268 in. Aq) for over 5 seconds.

HINT:

If the vacuum does not change, the hose connecting the VSV to the service port has come loose or is blocked, or the VSV is malfunctioning.

(h) Stop the engine.

(i) Disconnect the hand−held tester from the DLC3.

(j) Disconnect the vacuum gauge from the EVAP service port on the purge line.

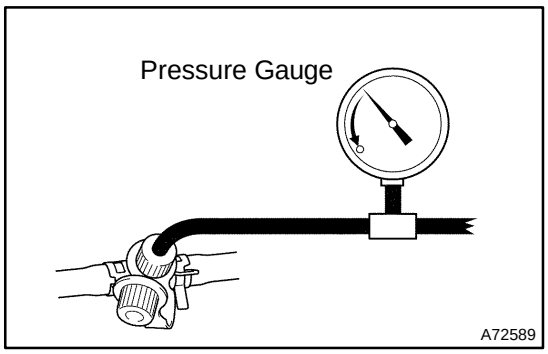

(k) Connect a pressure gauge to the EVAP service port on the purge line.

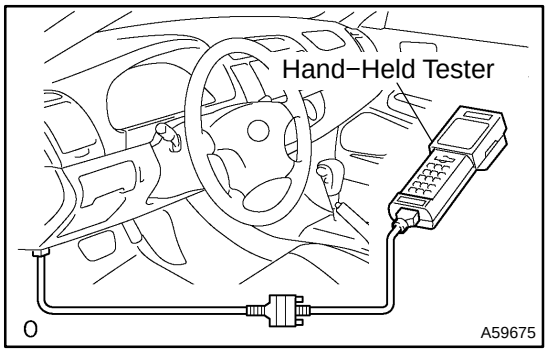

(l) Connect the hand−held tester to the DLC3.
(m) Turn the ignition switch ON.
(n) Turn the hand−held tester main switch ON.
(o) Use the ACTIVE TEST mode on the hand−held tester to operate the VSV for CCV.

NOTICE:

In step (m), the ignition switch should be ON, but the engine should not be running.

HINT:

If the check is not completed within 10 minuites, the VSV for CCV will be reset and close automatically.

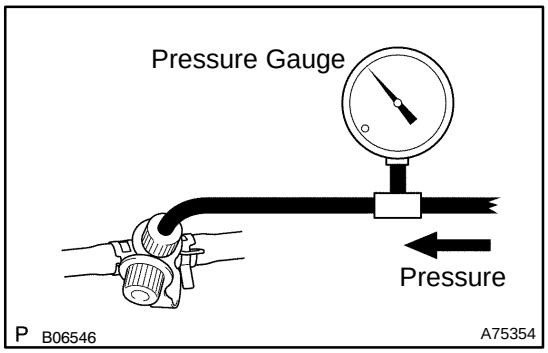

(p) Check the pressure.
  (1) Add 13.5 to 15.5 in.Aq of pressure from the EVAP service port.

  Standard:

  2 minutes after the pressure is added, the gauge should still read over 7.7 to 8.8 in.Aq.

HINT:

If you cannot add pressure, the hose connecting the VSV for EVAP canister fuel tank has become disconnected or the VSV is open.

  (2) Check if the pressure decreases when the fuel tank cap is removed while adding pressure.

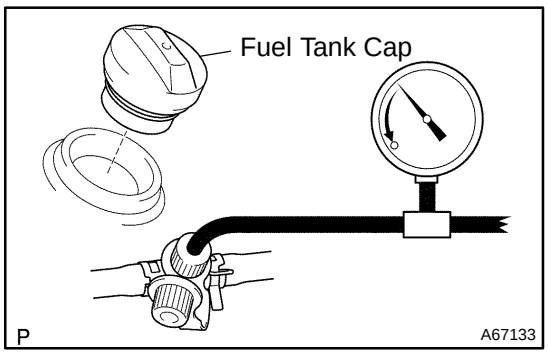

HINT:

If the pressure does not decrease when the fuel tank cap is removed, the hose connecting the service port to the fuel tank is blocked.

(q) Turn the ignition switch OFF.
(r) Disconnect the hand−held tester from the DLC3.

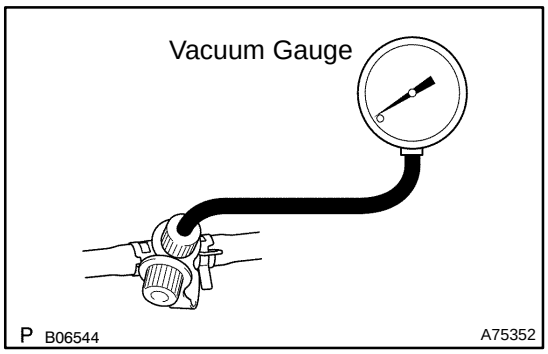

5. Not Using Hand−Held Tester:
INSPECT EVAP SYSTEM LINE

(a) Warm up and stop the engine.
  (1) Warm up the engine to normal operating temperature.

(b) Install a vacuum gauge (EVAP control system test equipment vacuum gauge) to the EVAP service port on the purge line.

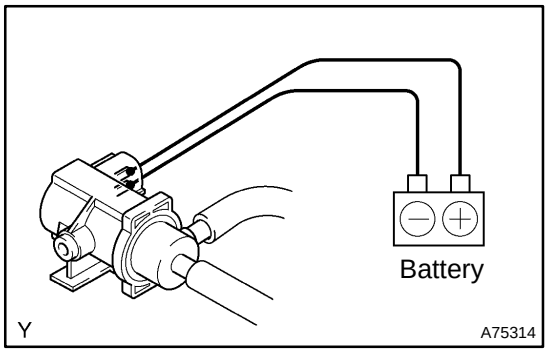

(c) Disconnect the VSV for EVAP connector.

(d) Connect the battery's positive (+) and negative (−) leads to the VSV for EVAP terminals.

(e) Start the engine.

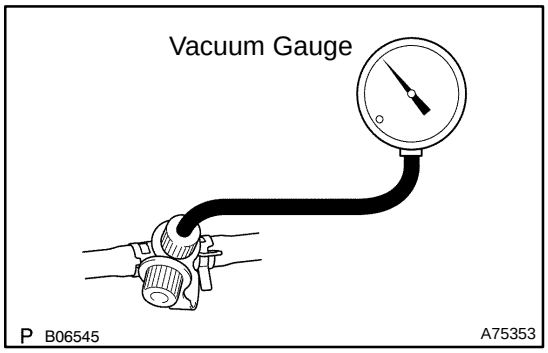

(f) Check the vacuum while the engine is idling.
Standard:
Maintain at 0.368 to 19.713 in.Hg (5 to 268 in.Aq) for over 5 seconds.

HINT:
If the vacuum does not change, the hose connecting the VSV to the service port has come loose or is blocked, or the VSV is malfunctioning.

(g) Stop the engine.

(h) Disconnect the battery's positive (+) and negative (−) leads from the VSV for EVAP terminals.

(i) Reconnect the VSV for EVAP connector.

(j) Disconnect the vacuum gauge from the EVAP service port on the purge line.

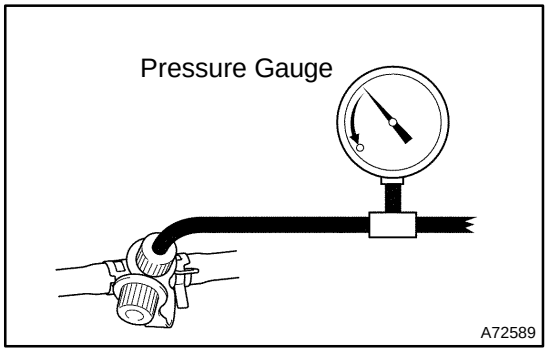

(k) Connect a pressure gauge to the EVAP service port on the purge line.

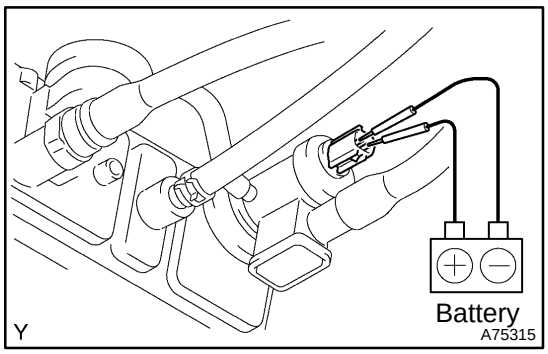

(l) Disconnect the VSV for CCV connector.
(m) Connect the battery's positive (+) and negative (−) leads to the VSV for CCV terminals.

NOTICE:
Incorrect electrode connection causes damage to the VSV. Pay due attention when connecting the lead wire.

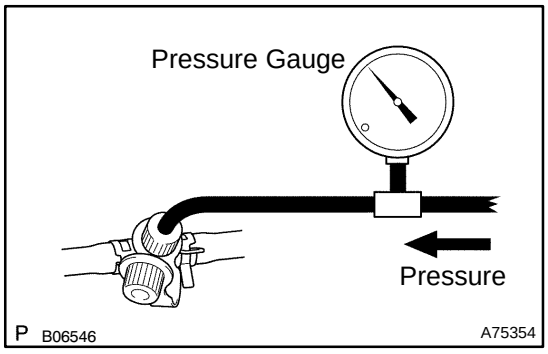

(n) Check the pressure.
(1) Add 13.5 to 15.5 in.Aq of pressure from the EVAP service port.
Standard:
2 minutes after the pressure is added, the gauge should still read over 7.7 to 8.8 in.Aq.

HINT:
If you cannot add pressure, the hose connecting the VSV for EVAP canister fuel tank has become disconnected or the VSV is open.

(2) Check if the pressure decreases when the fuel tank cap is removed while adding pressure.

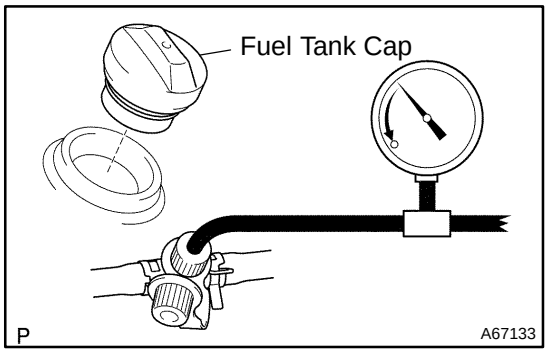

HINT:
If the pressure does not decrease when the fuel tank cap is removed, the hose connecting the service port to the fuel tank is blocked.

(o) Disconnect the battery's positive (+) and negative (−) leads from the VSV for CCV terminals.
(p) Reconnect the VSV for CCV connector.
(q) Disconnect the pressure gauge from the EVAP service port on the purge line.

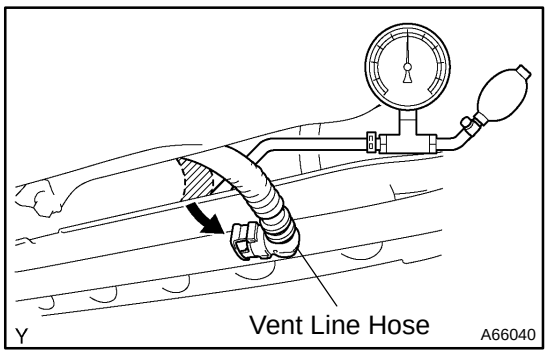

6. CHECK AIR TIGHTNESS IN FUEL TANK AND FILLER PIPE

(a) Disconnect the vent line hose from the fuel tank (see page 11−21).
(b) Connect the pressure gauge to the fuel tank.
(c) Apply pressure to the fuel tank to create an internal pressure of 4 kPa (41 gf/cm^2, 0.58 psi).
(d) Check that the internal pressure of the fuel tank is maintained for 1 minute.
(e) Check the connected portions of each hose and pipe.
(f) Check the installed parts on the fuel tank.

If malfunctions, damage or other problems are found, replace the fuel tank and filler pipe.

(g) Reconnect the vent line hose to the fuel tank.

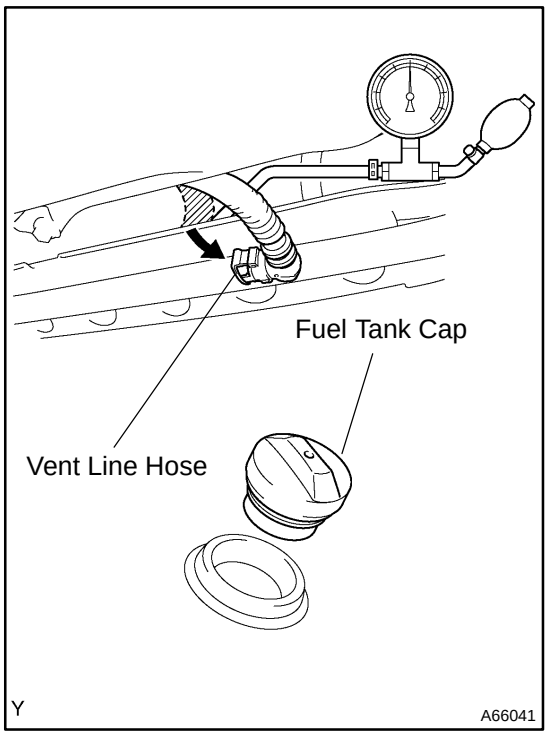

7. INSPECT FUEL CUTOFF VALVE AND FILL CHECK VALVE

(a) Disconnect the vent line hose from the fuel tank (see page 11−21).

(b) Connect the pressure gauge to the fuel tank.

(c) Fill the fuel tank with fuel until full.

(d) Apply pressure of 4 kPa (41 gf/cm^2, 0.58 psi) to the vent port of the fuel tank.

HINT:

It is necessary to check the amount of fuel in the fuel tank. When the fuel tank is full, the float valve of the fill check valve is closed and no air can pass through.

(e) Remove the fuel tank cap, and check that pressure drops.

If pressure does not drop, replace the fuel tank assembly.

(f) Reconnect the vent line hose to the fuel tank.

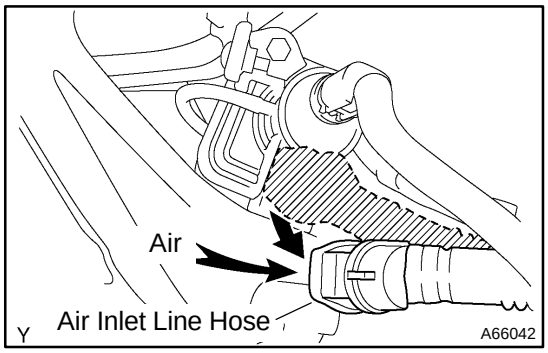

8. CHECK AIR INLET LINE

(a) Disconnect the air inlet line hose from the charcoal canister.

(b) Check that air can flow freely into the air inlet line.

If air cannot flow freely into the air inlet line, repair or replace it.

(c) Reconnect the air inlet line hose to the charcoal canister.

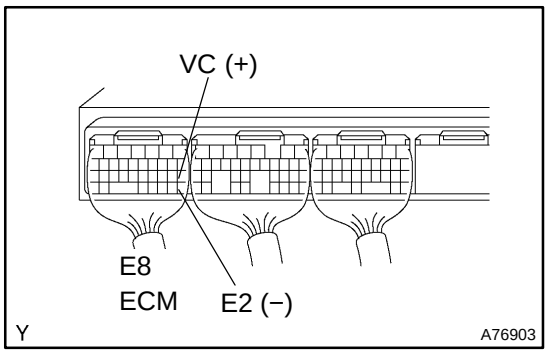

9. INSPECT VAPOR PRESSURE SENSOR

(a) Check the power source voltage of the vapor pressure sensor.

(1) Turn the ignition switch ON.

(2) Using a voltmeter, measure the voltage between terminals E8−18 (VC) and E8−28 (E2) of the ECM connectors.

Standard: 4.5 to 5.5 V

(3) Turn the ignition switch OFF.

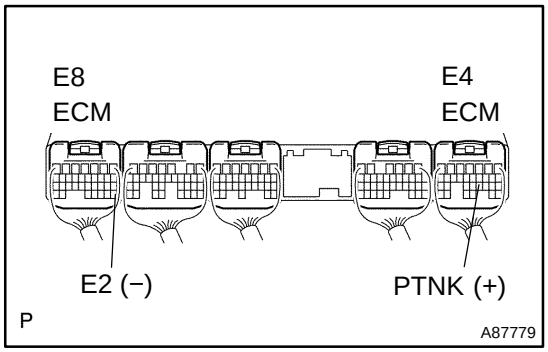

(b) Check the power output of the vapor pressure sensor.

(1) Turn the ignition switch ON.

(2) Remove the fuel tank cap.

(3) Using a voltmeter, measure the voltage between terminals E4−21 (PTNK) and E8−28 (E2) of the ECM connectors.

Standard: 3.0 to 3.6 V

(4) Reinstall the fuel tank cap.

120CJ−02

INSPECTION

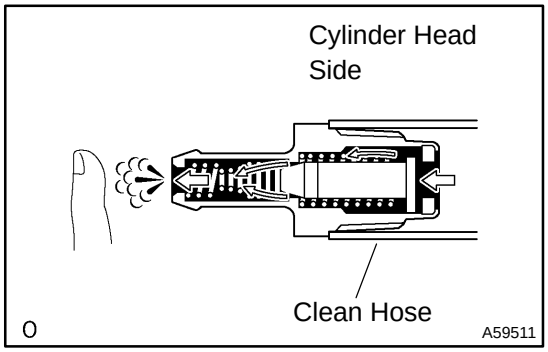

1. INSPECT VENTILATION VALVE SUB−ASSY

(a) Install a clean hose to the ventilation valve.

(b) Check ventilation valve operation.

(1) Blow air into the cylinder head side, and check air passes through easily.

CAUTION:

Do not suck air through the valve. Petroleum substances inside the valve are harmful.

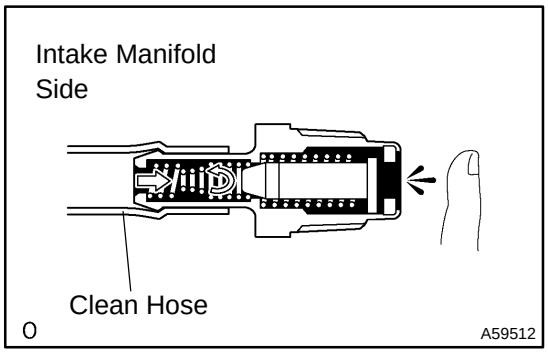

(2) Blow air into the intake manifold side, and check that air passes through with difficulty.

If operation is not as specified, replace the ventilation valve.

(c) Remove the clean hose from the ventilation valve.

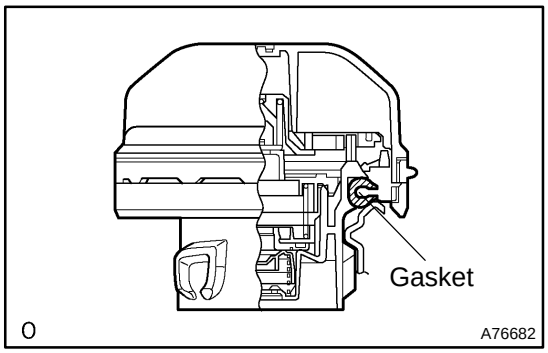

2. INSPECT FUEL TANK CAP ASSY

(a) Visually check if the cap and gasket are deformed or damaged.

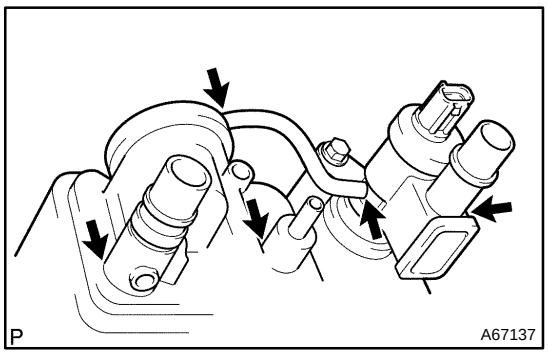

3. INSPECT CHARCOAL CANISTER ASSY (Except PZEV)

(a) Visually check the charcoal canister for cracks or damage.

If cracks or damage is found, replace the charcoal canister assy.

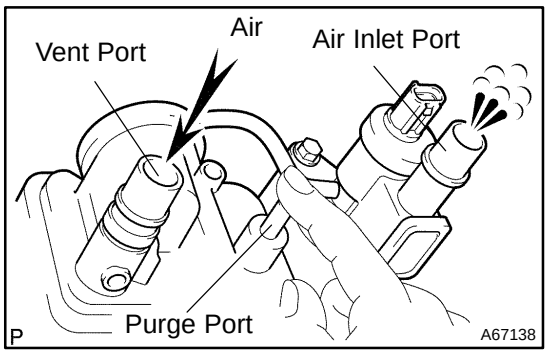

(b) Check charcoal canister operation.

(1) While holding the purge port closed, blow air (0.39 kPa, 4.0 gf/cm^2, 0.06 psi) into the vent port, and check that air flows from the air inlet port.

If the result is not as specified, replace the charcoal canister.

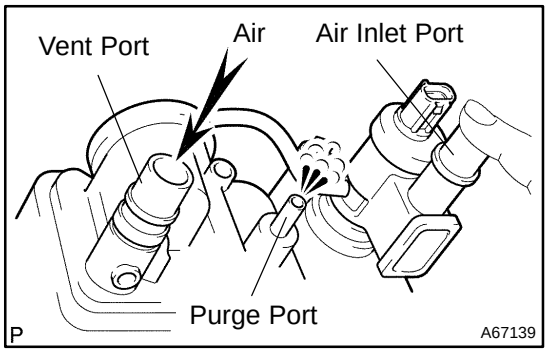

(2) While holding the air inlet port closed, blow air (0.39 kPa, 4.0 gf/cm^2, 0.06 psi) into the vent port, and check that air flows from the purge port.

If the result is not as specified, replace the charcoal canister.

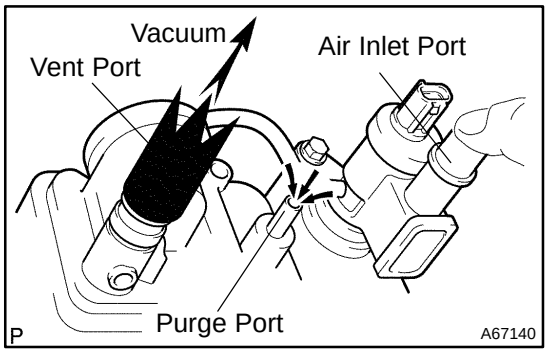

(3) While holding the air inlet port closed, apply vacuum (3.43 kPa, 25.7 gf/cm^2, 1.01 psi) to the vent port, and check that air is sucked in from the purge port.

If the result is not as specified, replace the charcoal canister.

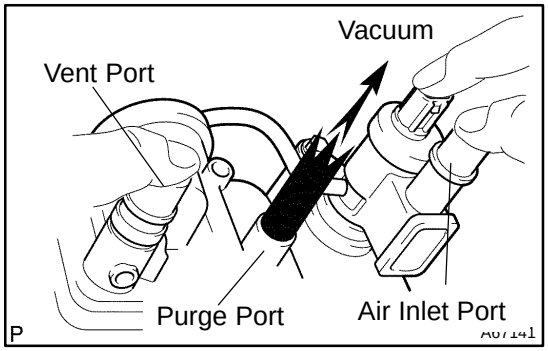

(c) Check the air tightness.

(1) While holding the vent and air inlet ports closed, apply vacuum (3.43 kPa, 25.7 gf/cm^2, 1.01 psi) to the purge port, and check that the vacuum is maintained for 1 minute.

HINT:

In order to maintain air tightness, the check should be performed while holding the CCV terminal port closed.

If the result is not as specified, replace the charcoal canister.

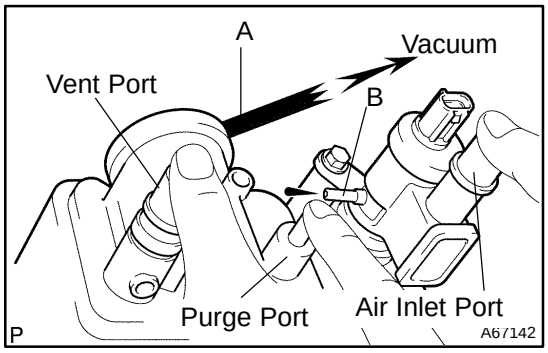

(d) Check the diaphragm.

(1) Remove the air hose between ports A and B.

(2) While holding the vent, purge and air inlet ports closed, apply vacuum (1.42 kPa, 11 mmHg, 0.42 in.Hg) into port A, and check that air is sucked in from port B.

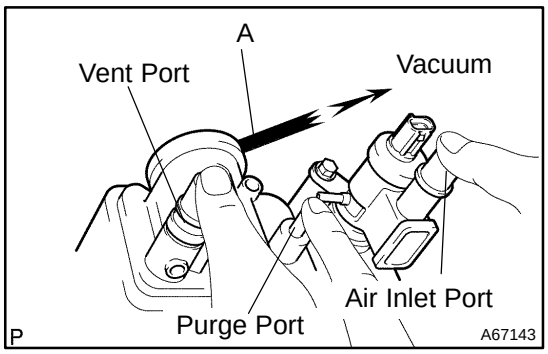

(3) While holding the vent, purge and air inlet ports closed, apply vacuum (1.42 kPa, 11 mmHg, 0.42 in.Hg) into port A, and measure how long it takes for vacuum to drop.

Vacuum drop time: 10 seconds or more

If the result is not as specified, replace the charcoal canister.

(4) Reinstall the air hose between ports A and B.

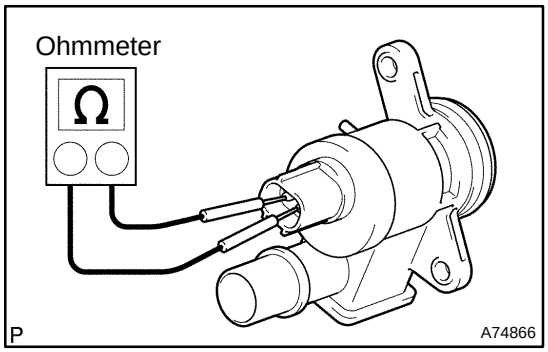

(e) Check the VSV for open circuit.

(1) Measure the resistance between the terminals.

Standard:

Condition	Specified Condition
20°C (68°F)	25 to 30 Ω
100°C (212°F)	32 to 40 Ω

If the result is not as specified, replace the charcoal canister.

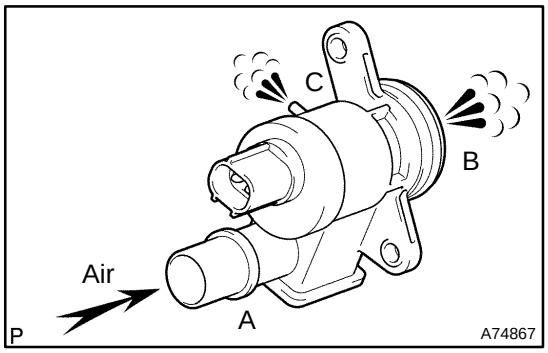

(f) Check VSV operation.

(1) Check that air flows from port A to ports B and C.

If the result is not as specified, replace the charcoal canister.

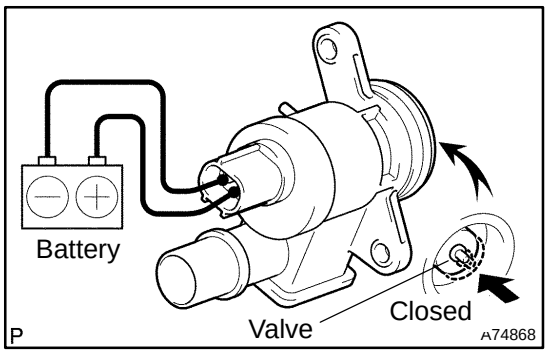

(2) Apply battery positive voltage across the terminals.

(3) Check that the valve is closed.

If the result is not as specified, replace the charcoal canister.

NOTICE:

Incorrect electrode connection causes damage to the VSV. Pay due attention when connecting the lead wire.

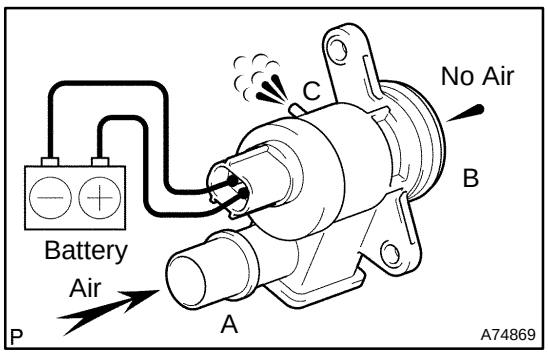

(4) Check that air does not flow from port A to port B.

(5) Check that air flows from port A to port C.

If the result is not as specified, replace the charcoal canister.

NOTICE:

Incorrect electrode connection causes damage to the VSV. Pay due attention when connecting the lead wire.

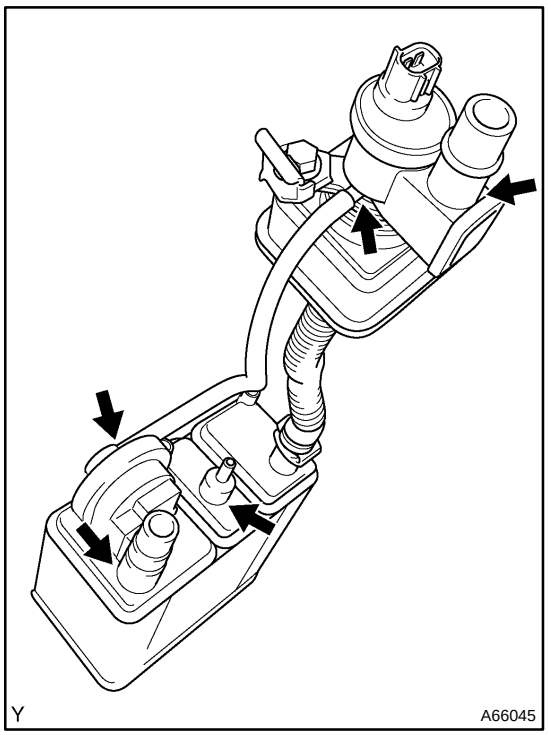

4. INSPECT CHARCOAL CANISTER ASSY (PZEV)

(a) Visually check the charcoal canister for cracks or damage.

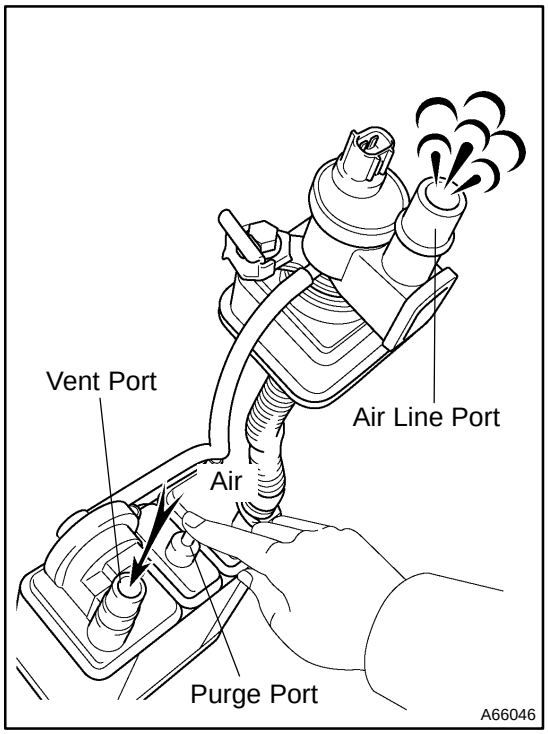

(b) Inspect the charcoal canister operation.

(1) While holding the purge port closed, blow air (0.39 kPa, 4.0 gf/cm^2, 0.06 psi) into the vent port, and check that air flows from the air line port.

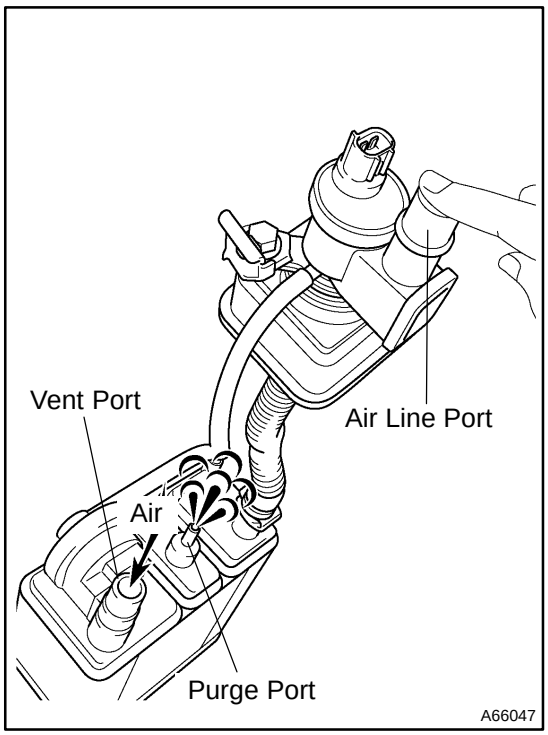

(2) While holding the air line port closed, blow air (0.39 kPa, 4.0 gf/cm^2, 0.06 psi) into the vent port, and check that air flows from the purge port.

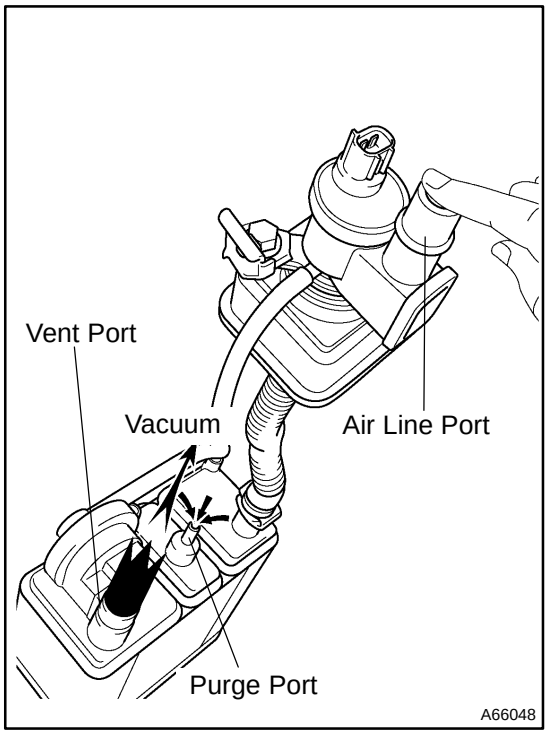

(3) While holding the air line port closed, apply vacuum (3.43 kPa, 25.7 gf/cm^2, 1.01 psi) to the vent port, and check that air is sucked in from the purge port.

If operation is not as specified, replace the charcoal canister.

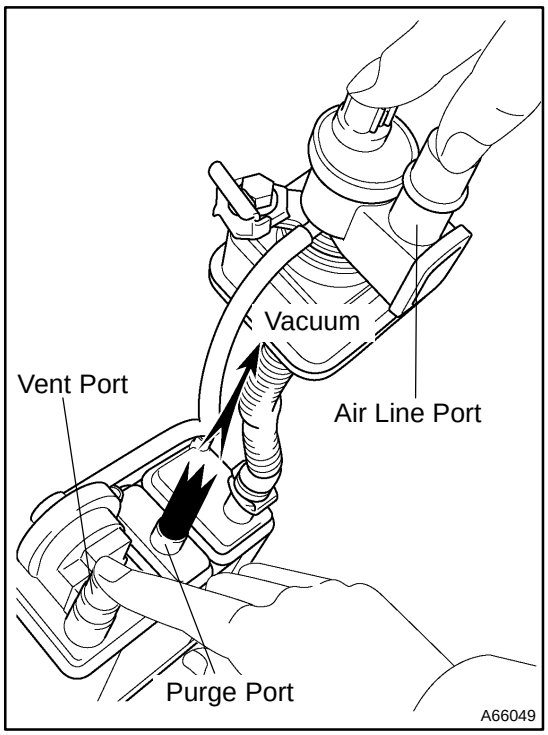

(c) Inspect air tightness.

(1) While holding the vent and air line ports closed, apply vacuum (3.43 kPa, 25.7 gf/cm^2, 1.01 psi) to the purge port, and check that the vacuum is maintained for 1 minute.

HINT:

In order to maintain air tightness, this check should be performed with the CCV terminal port held closed by your fingers. If operation is not as specified, replace the charcoal canister.

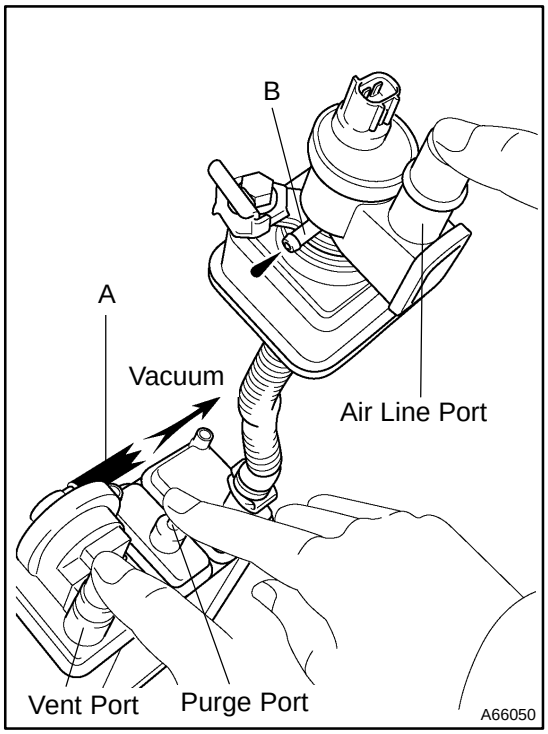

(d) Inspect the diaphragm.

(1) Remove the air hose between ports A and B.

(2) While holding the vent, purge and air line ports closed, apply vacuum (1.42 kPa, 11 mmHg, 0.42 in.Hg) into port A, and check that air is sucked in from port B.

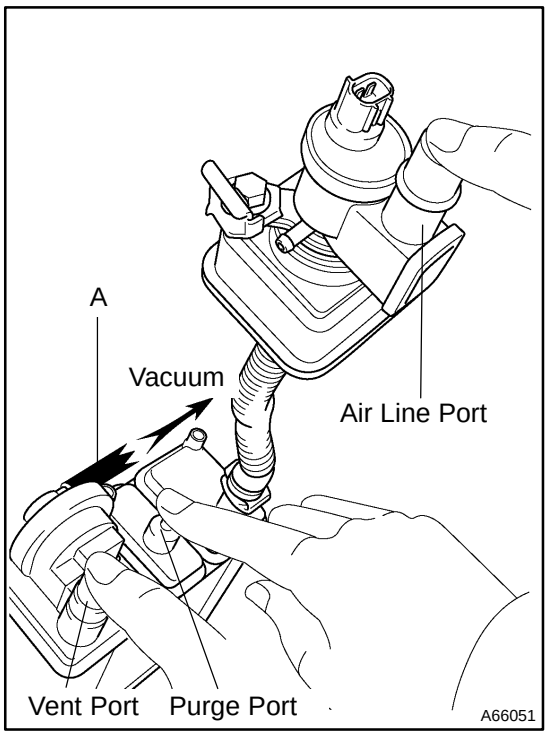

(3) While holding the vent, purge and air line ports closed, apply vacuum (1.42 kPa, 11 mmHg, 0.42 in.Hg) into port A, and measure how long it takes for vacuum to drop.

Vacuum drop time: 10 sec. or more

If operation is not as specified, replace the charcoal canister.

(4) Reinstall the air hose between ports A and B.

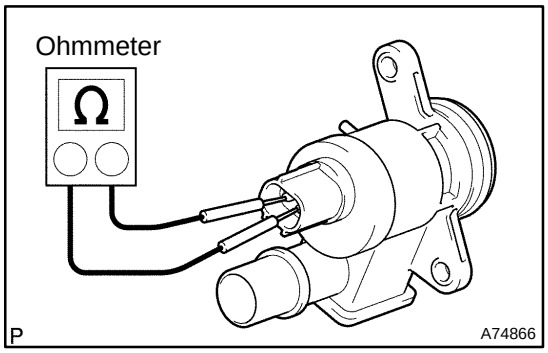

(e) Check the VSV for open circuit.

(1) Measure the resistance between the terminals.

Standard:

Condition	Specified Condition
20°C (68°F)	25 to 30 Ω
100°C (212°F)	32 to 40 Ω

If the result is not as specified, replace the charcoal canister.

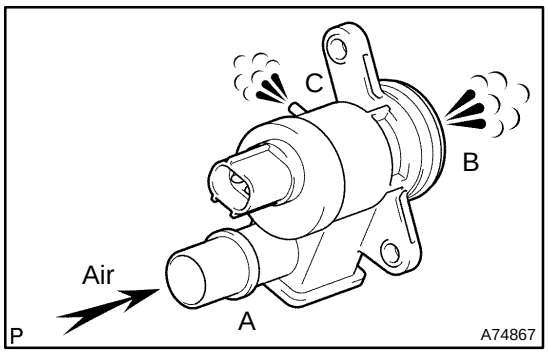

(f) Check VSV operation.

(1) Check that air flows from port A to ports B and C.

If the result is not as specified, replace the charcoal canister.

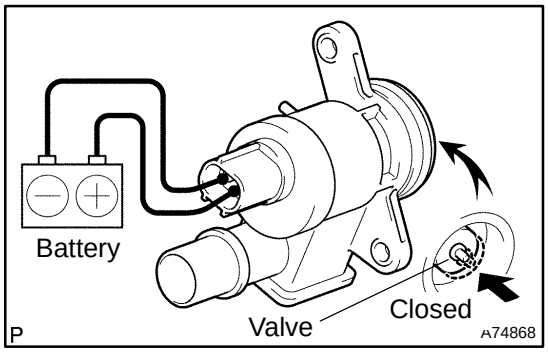

(2) Apply battery positive voltage across the terminals.

(3) Check that the valve is closed.

If the result is not as specified, replace the charcoal canister.

NOTICE:

Incorrect electrode connection causes damage to the VSV. Pay due attention when connecting the lead wire.

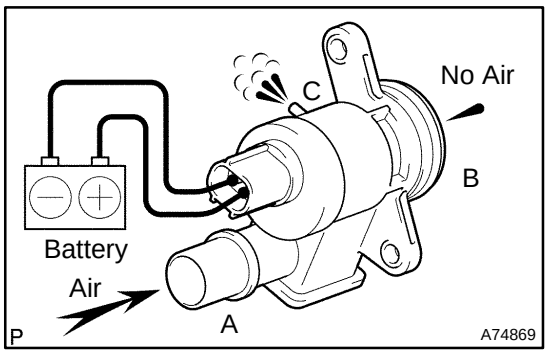

(4) Check that air does not flow from port A to port B.
(5) Check that air flows from port A to port C.

If the result is not as specified, replace the charcoal canister.

NOTICE:

Incorrect electrode connection causes damage to the VSV. Pay due attention when connecting the lead wire.

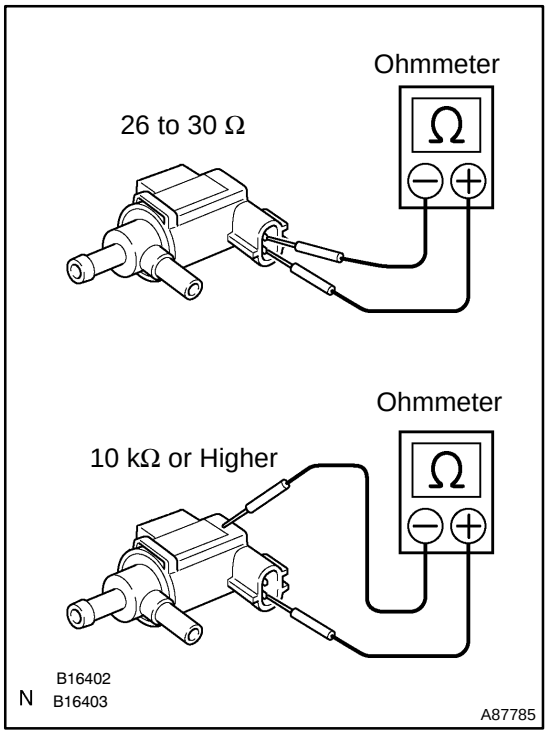

5. INSPECT VACUUM SWITCHING VALVE ASSY FOR EVAP

(a) Check the VSV for open circuit.
(1) Measure the resistance.

Tester Connection	Specified Condition
1 − 2	26 to 30 Ω at 20°C (68°F)
1 − Body ground 2 − Body ground	10 kΩ or higher

If the resistance is not as specified, replace the VSV assy.

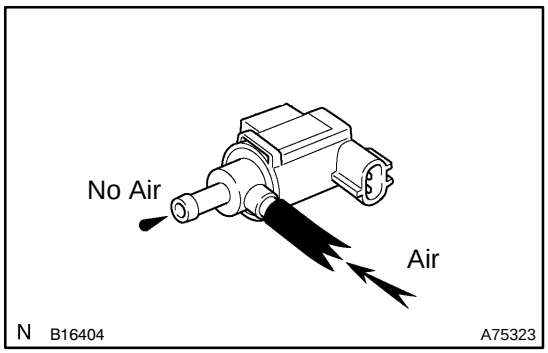

(b) Check VSV operation.
(1) Check that air does not flow from the port as shown in the illustration.

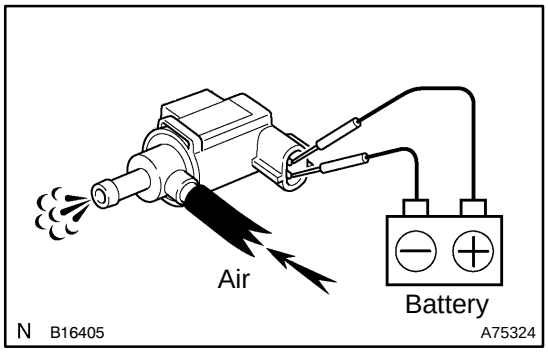

(2) Apply battery positive voltage across the terminals.
(3) Check that air flows from the ports.

If the result is not as specified, replace the VSV assy.

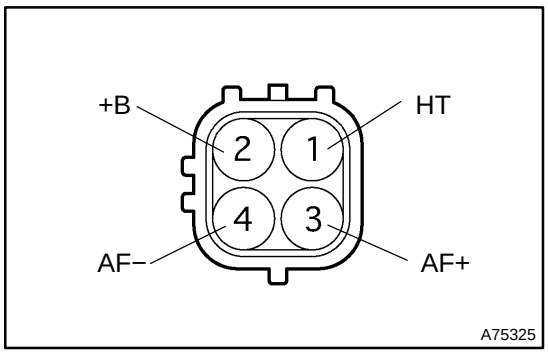

6. INSPECT AIR FUEL RATIO SENSOR

(a) Measure the resistance between terminals 1 (HT) and 2 (+B).

Standard:

Condition	Specified Condition
20°C (68°F)	0.8 to 1.4 Ω
800°C (1,472°F)	1.8 to 3.2 Ω

If the result is not as specified, replace the sensor.

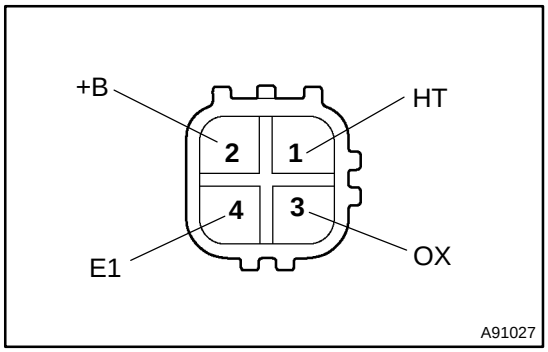

7. INSPECT HEATED OXYGEN SENSOR (BANK 1 SENSOR 2)

(a) Measure the resistance between terminals 1 (HT) and 2 (+B).

Standard:

Condition	Specified Condition
20°C (68°F)	11 to 16 Ω
800°C (1,472°F)	23 to 32 Ω

If the result is not as specified, replace the sensor.

CHARCOAL CANISTER ASSY (2AZ−FE)(From July, 2003)

120BG−03

REPLACEMENT

1. REMOVE FUEL TANK ASSY (See page 11−21)

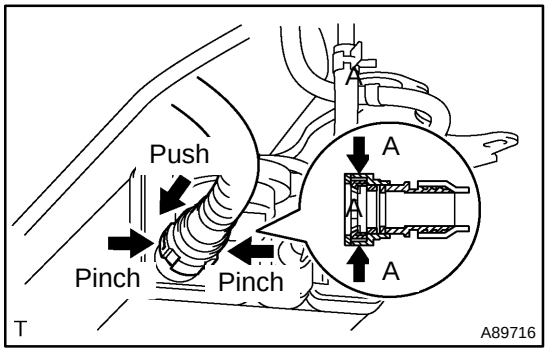

2. REMOVE CHARCOAL CANISTER ASSY

(a) Disconnect the fuel tank vent hose.
  (1) Push the connector deep into the charcoal canister assy to release the locking tab.
  (2) Pinch portion A.
  (3) Pull out the connector.

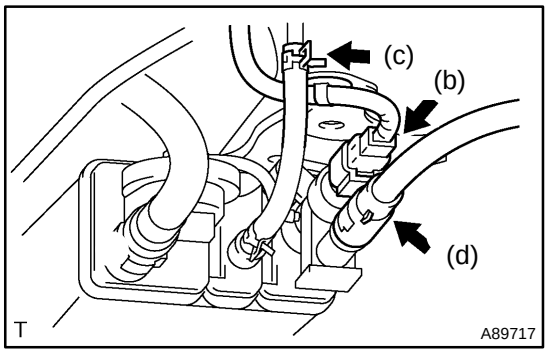

(b) Disconnect the VSV connector for CCV.
(c) Disconnect the fuel emission hose.
(d) Disconnect the air inlet line hose.

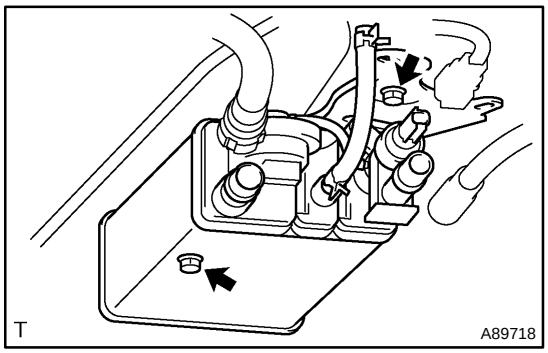

(e) Remove the 2 bolts and charcoal canister.

3. INSTALL CHARCOAL CANISTER ASSY

Torque: 39.2 N·m (400 kgf·cm, 29 in.·lbf)

4. INSTALL FUEL TANK ASSY (See page 11−21)

VENTILATION VALVE SUB−ASSY (2AZ−FE)(From July, 2003)

120BQ−05

REPLACEMENT

1. REMOVE VENTILATION VALVE SUB−ASSY

(a) Disconnect the PCV hose from the PCV valve.

(b) Remove the PCV valve.

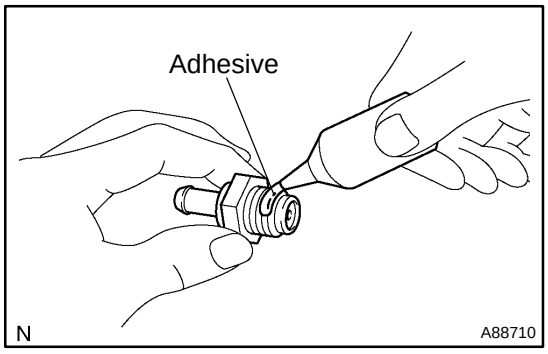

2. INSTALL VENTILATION VALVE SUB−ASSY

(a) Reinstall the PCV valve.

(1) Apply adhesive to 2 or 3 threads.

Adhesive:

Part No. 08833−00070, THREE BOND 1324 or equivalent

(2) Reinstall the PCV valve.

Torque: 19 N·m (193 kgf·cm, 14 ft·lbf)

(b) Connect the PCV hose to the PCV valve.

EMISSION CONTROL SYSTEM (1MZ−FE/3MZ−FE)

120BO−03

ON−VEHICLE INSPECTION

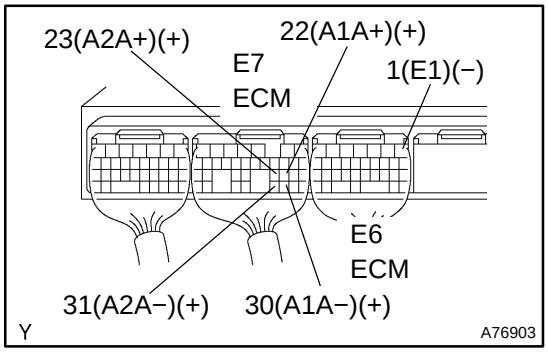

1. INSPECT AIR−FUEL RATIO COMPENSATION SYSTEM

(a) Measure the voltage between the terminals of the ECM connectors.

Standard:

Tester Connection	Condition	Specified Condition
E7−22 (A1A+) − E6−1(E1)	Ignition switch ON	3.3 V
E7−30 (A1A−) − E6−1(E1)	Ignition switch ON	3.0 V
E7−23 (A2A+) − E6−1(E1)	Ignition switch ON	3.3 V
E7−31 (A2A−) − E6−1(E1)	Ignition switch ON	3.0 V

NOTICE:

Connect test leads to the connector's backside. The connectors should not be disconnected from the ECM.

HINT:

Voltage between the terminals of the engine ECM is kept constant regardless of the voltage of the A/F sensor.

(b) Connect the hand−held tester to the DLC3.

(c) Select "DATA MONITOR". Then select "A/FS B1 S1", "A/FS B2 S1" and "O2S B1 S2" to display the monitors.

(d) Warm up the A/F sensor with the engine speed at 2,500 rpm for approximately 2 minutes.

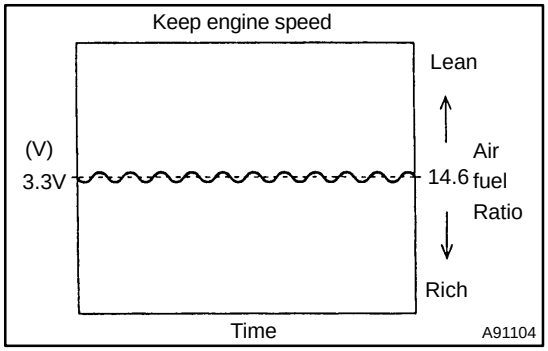

(e) Keep the engine speed at 2,500 rpm and confirm that the displays of "A/FS B1 S1" and "A/FS B2 S1" are as shown in the illustration.

HINT:

- The illustration may differ slightly from the display on the hand held tester.
- Only the hand−held tester displays the waveform of A/F sensor.

(f) Confirm that the display of "O2S B1 S2" changes between 0 V to 1 V with the engine speed at 2,500 rpm.

2. INSPECT FUEL CUT OFF RPM

(a) Increase the engine speed to at least 3,500 rpm.

(b) Use a sound scope to check for injector operating sounds.

(c) Check that when the throttle lever is released, injector operation sounds stop momentarily (at 2,500 rpm) and then resume (at 1,400 rpm).

Standard:

Item	Specified Condition
Fuel cut off rpm	2,500 rpm
Fuel return rpm	1,400 rpm

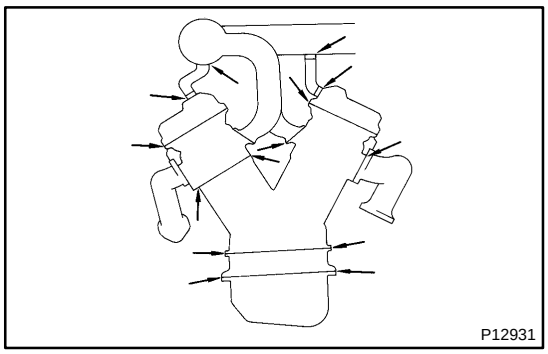

3. VISUALLY INSPECT HOSES, CONNECTIONS AND GASKETS

(a) Check for cracks, leaks or damage.

HINT:

Removal or problems with the engine oil dipstick, oil filler cap, PCV hose and other components may cause the engine to run improperly. Disconnection, looseness or cracks in the parts of the air induction system between the throttle body and cylinder head will allow air suction and cause the engine to run improperly.

If necessary, replace any damage parts.

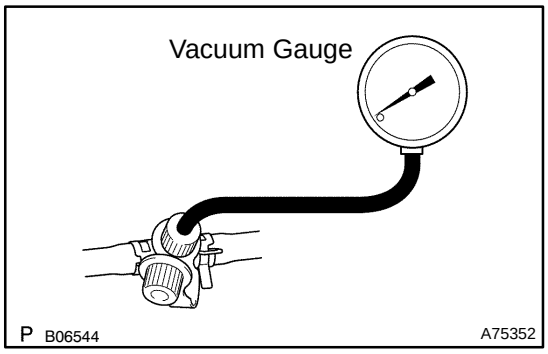

4. Using Hand−Held Tester:
INSPECT EVAP SYSTEM LINE

(a) Warm up and stop the engine.
  (1) Warm up the engine to normal operating temperature.

(b) Install a vacuum gauge (EVAP control system test equipment vacuum gauge) to the EVAP service port on the purge line.

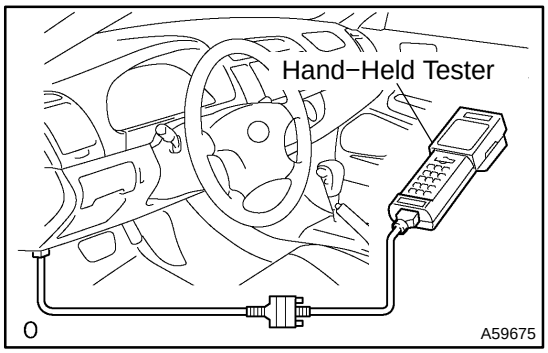

(c) Connect the hand−held tester to the DLC3.

(d) Start the engine.

(e) Turn the hand−held tester main switch ON.

(f) Use the ACTIVE TEST mode on the hand−held tester to operate the VSV for EVAP.

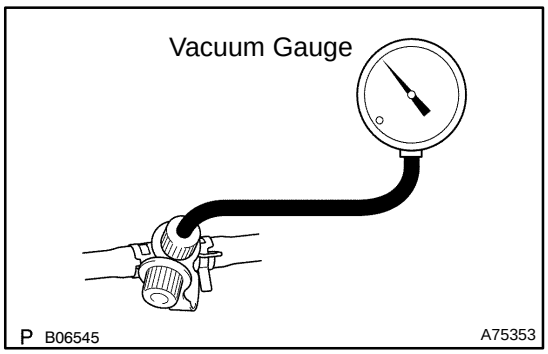

(g) Check the vacuum while the engine is idling.
  Standard:
  Maintain at 0.368 to 19.713 in.Hg (5 to 268 in. Aq) for over 5 seconds.

HINT:

If the vacuum does not change, the hose connecting the VSV to the service port has come loose or is blocked, or the VSV is malfunctioning.

(h) Stop the engine.

(i) Disconnect the hand−held tester from the DLC3.

(j) Disconnect the vacuum gauge from the EVAP service port on the purge line.

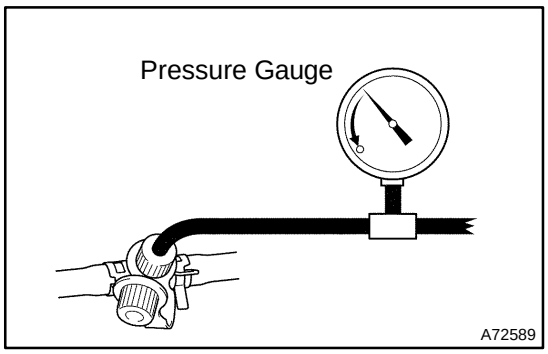

(k) Connect a pressure gauge to the EVAP service port on the purge line.

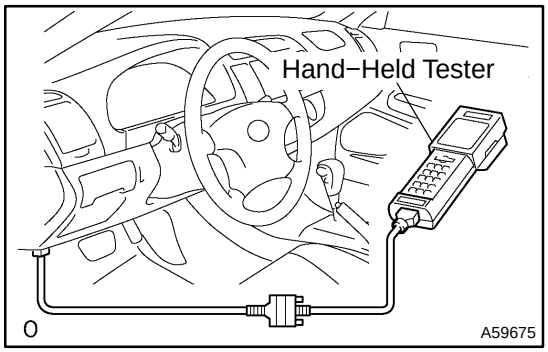

(l) Connect the hand−held tester to the DLC3.
(m) Turn the ignition switch ON.
(n) Turn the hand−held tester main switch ON.
(o) Use the ACTIVE TEST mode on the hand−held tester to operate the VSV for CCV.

NOTICE:

In step (m), the ignition switch should be ON, but the engine should not be running.

HINT:

If the check is not completed within 10 minutes, the VSV for CCV will be reset and close automatically.

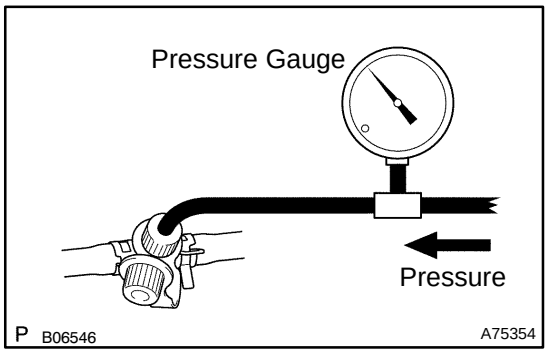

(p) Check the pressure.
(1) Add 13.5 to 15.5 in. Aq of pressure from the EVAP service port.

Standard:

2 minutes after the pressure is added, the gauge should still read over 7.7 to 8.8 in. Aq.

HINT:

If you cannot add pressure, the hose connecting the VSV for EVAP canister fuel tank has become disconnected or the VSV is open.

(2) Check if the pressure decreases when the fuel tank cap is removed while adding pressure.

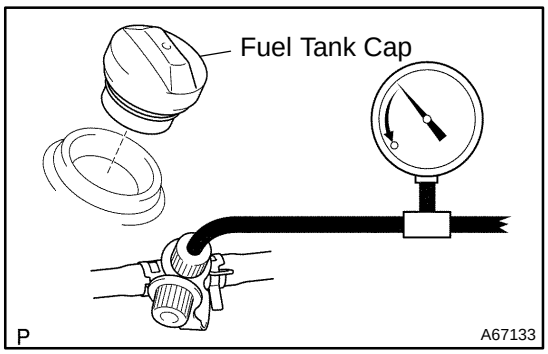

HINT:

If the pressure does not decrease when the fuel tank cap is removed, the hose connecting the service port to the fuel tank is blocked.

(q) Turn the ignition switch OFF.
(r) Disconnect the hand−held tester from the DLC3.

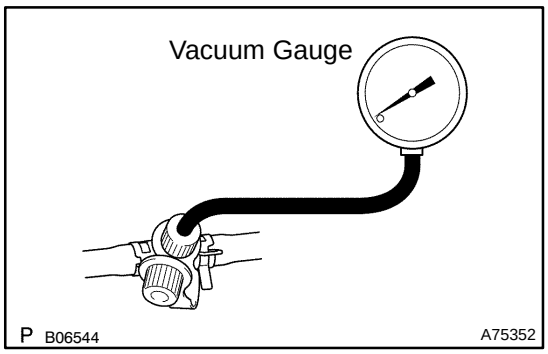

5. Not Using Hand−Held Tester:
INSPECT EVAP SYSTEM LINE

(a) Warm up and stop the engine.
  (1) Warm up the engine to normal operating temperature.

(b) Install a vacuum gauge (EVAP control system test equipment vacuum gauge) to the EVAP service port on the purge line.

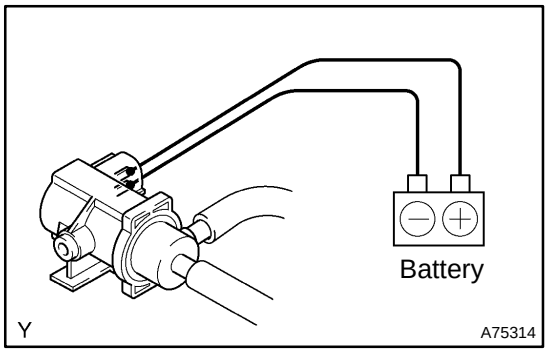

(c) Disconnect the VSV for EVAP connector.

(d) Connect the battery's positive (+) and negative (−) leads to the VSV for EVAP terminals.

(e) Start the engine.

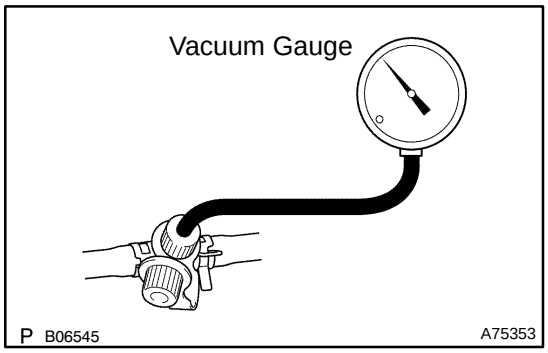

(f) Check the vacuum while the engine is idling.
Standard:
Maintain at 0.368 to 19.713 in.Hg (5 to 268 in. Aq) for over 5 seconds.

HINT:
If the vacuum does not change, the hose connecting the VSV to the service port has come loose or is blocked, or the VSV is malfunctioning.

(g) Stop the engine.

(h) Disconnect the battery's positive (+) and negative (−) leads from the VSV for EVAP terminals.

(i) Reconnect the VSV for EVAP connector.

(j) Disconnect the vacuum gauge from the EVAP service port on the purge line.

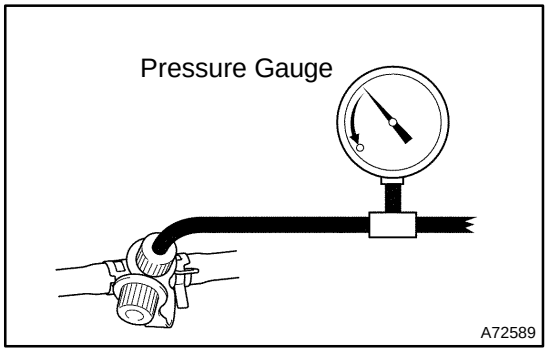

(k) Connect a pressure gauge to the EVAP service port on the purge line.

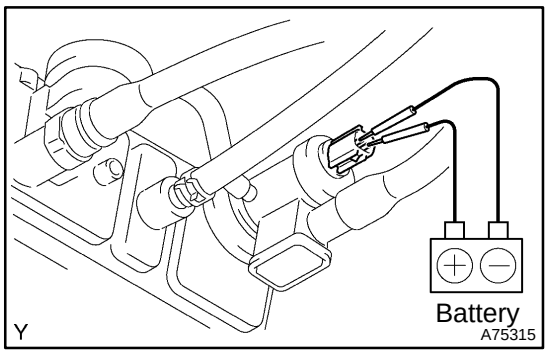

(l) Disconnect the VSV for CCV.
(m) Connect the battery's positive (+) and negative (−) leads to the VSV for CCV terminals.

NOTICE:
Incorrect electrode connection causes damage to the VSV. Pay due attention when connecting the lead wire.

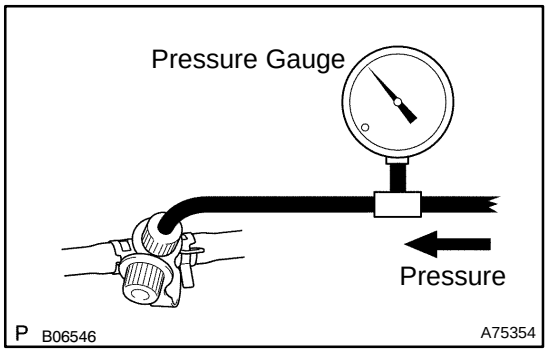

(n) Check the pressure.
(1) Add 13.5 to 15.5 in. Aq of pressure from the EVAP service port.

Standard:
2 minutes after the pressure is added, the gauge should still read over 7.7 to 8.8 in. Aq.

HINT:
If you cannot add pressure, the hose connecting the VSV for EVAP canister fuel tank has become disconnected or the VSV is open.

(2) Check if the pressure decreases when the fuel tank cap is removed while adding pressure.

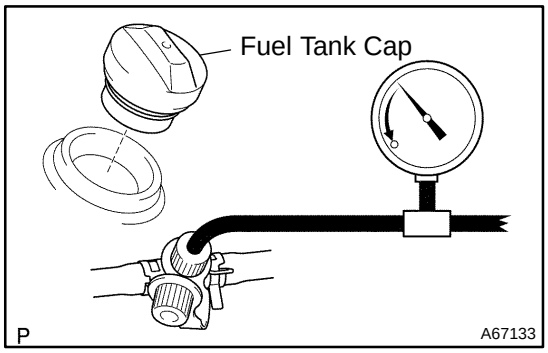

HINT:
If the pressure does not decrease when the fuel tank cap is removed, the hose connecting the service port to the fuel tank is blocked.

(o) Disconnect the battery's positive (+) and negative (−) leads from the VSV for CCV terminals.
(p) Reconnect the VSV for CCV connector.
(q) Disconnect the pressure gauge from the EVAP service port on the purge line.

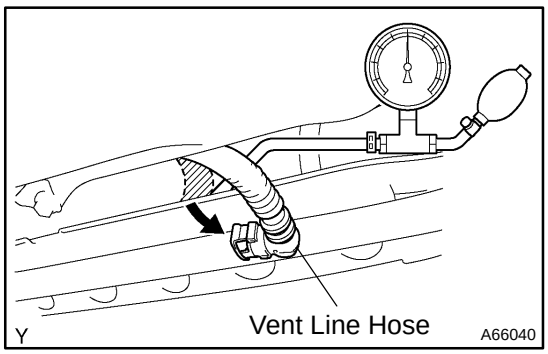

6. CHECK AIR TIGHTNESS IN FUEL TANK AND FILLER PIPE

(a) Disconnect the vent line hose from the fuel tank (see page 11−52).
(b) Connect the pressure gauge to the fuel tank.
(c) Apply pressure to the fuel tank to create an internal pressure of 4 kPa (41 gf/cm^2, 0.58 psi).
(d) Check that the internal pressure of the fuel tank is maintained for 1 minute.
(e) Check the connected portions of each hose and pipe.
(f) Check the installed parts on the fuel tank.

If malfunctions, damage or other problems are found, replace the fuel tank and filler pipe.

(g) Reconnect the vent line hose to the fuel tank.

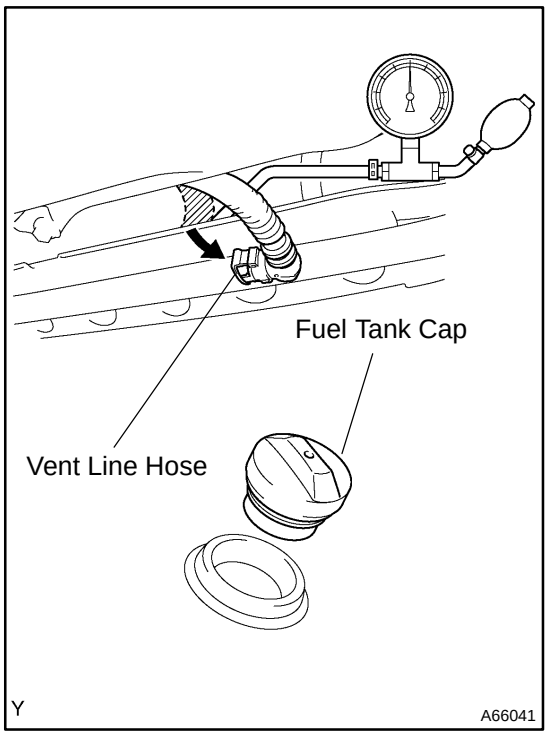

7. INSPECT FUEL CUTOFF VALVE AND FILL CHECK VALVE

(a) Disconnect the vent line hose from the fuel tank (see page 11−52).

(b) Connect the pressure gauge to the fuel tank.

(c) Fill the fuel tank with fuel until full.

(d) Apply pressure of 4 kPa (41 gf/cm^2, 0.58 psi) to the vent port of the fuel tank.

HINT:

It is necessary to check the amount of fuel in the fuel tank. When the fuel tank is full, the float valve of the fill check valve is closed and no air can pass through.

(e) Remove the fuel tank cap, and check that pressure drops.

If pressure does not drop, replace the fuel tank assembly.

(f) Reconnect the vent line hose to the fuel tank.

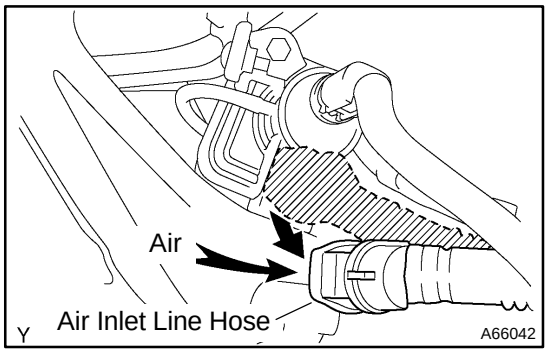

8. CHECK AIR INLET LINE

(a) Disconnect the air inlet line hose from the charcoal canister.

(b) Check that air can flow freely into the air inlet line.

If air cannot flow freely into the air inlet line, repair or replace it.

(c) Reconnect the air inlet line hose to the charcoal canister.

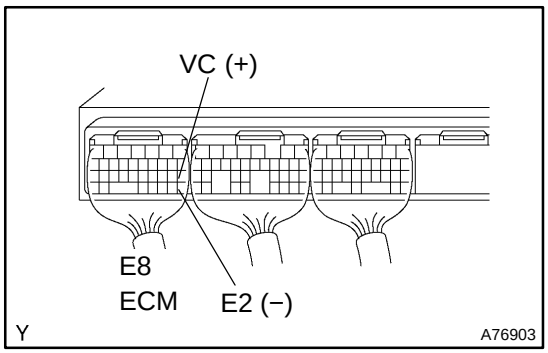

9. INSPECT VAPOR PRESSURE SENSOR

(a) Check the power source voltage of the vapor pressure sensor.

(1) Turn the ignition switch ON.

(2) Using a voltmeter, measure the voltage between connector terminals E8−18 (VC) and E8−28 (E2) of the ECM connectors.

Standard: 4.5 to 5.5 V

(3) Turn the ignition switch OFF.

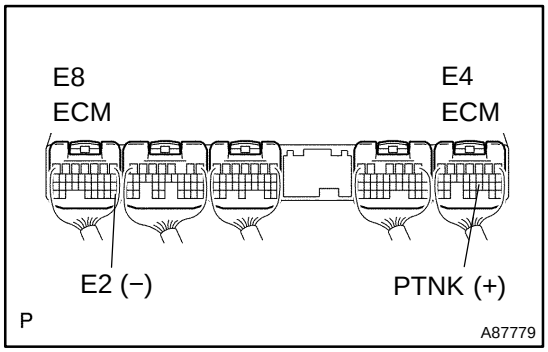

(b) Check the power output of the vapor pressure sensor.

(1) Turn the ignition switch ON.

(2) Remove the fuel tank cap.

(3) Using a voltmeter, measure the voltage between terminals E4−21 (PTNK) and E8−28 (E2) of the ECM connectors.

Standard: 3.0 to 3.6 V

(4) Reinstall the fuel tank cap.

INSPECTION

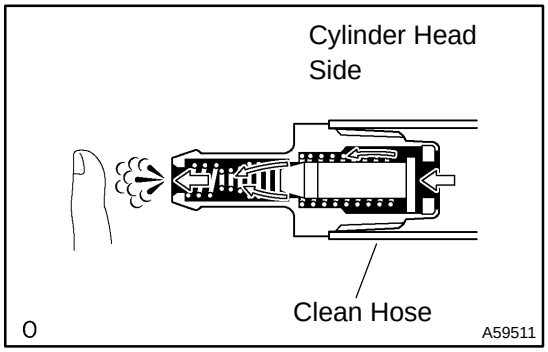

1. INSPECT VENTILATION VALVE SUB−ASSY

(a) Install a clean hose to the ventilation valve.

(b) Check ventilation valve operation.

(1) Blow air into the cylinder head side, and check that air passes through easily.

CAUTION:

Do not suck air through the valve. Petroleum substances inside the valve are harmful.

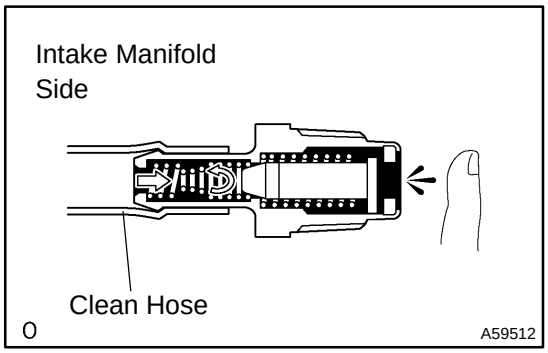

(2) Blow air into the intake manifold side, and check that air passes through with difficulty.

If the result is not as specified, replace the ventilation valve.

(c) Remove the clean hose from the ventilation valve.

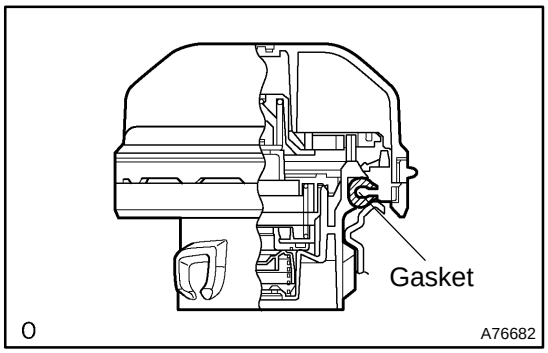

2. INSPECT FUEL TANK CAP ASSY

(a) Visually check if the cap and gasket are deformed or damaged.

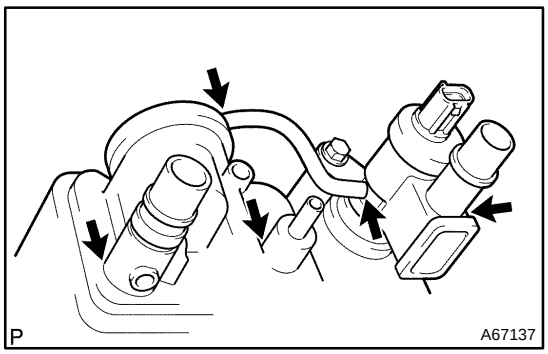

3. INSPECT CHARCOAL CANISTER ASSY

(a) Visually check the charcoal canister for cracks or damage.

If cracks or damage is found, replace the charcoal canister assy.

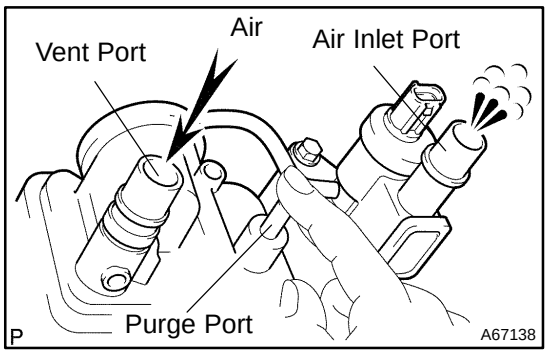

(b) Check the charcoal canister operation.

(1) While holding the purge port closed, blow air (0.39 kPa, 4.0 gf/cm^2, 0.06 psi) into the vent port, and check that air flows from the air inlet port.

If the result is not as specified, replace the charcoal canister.

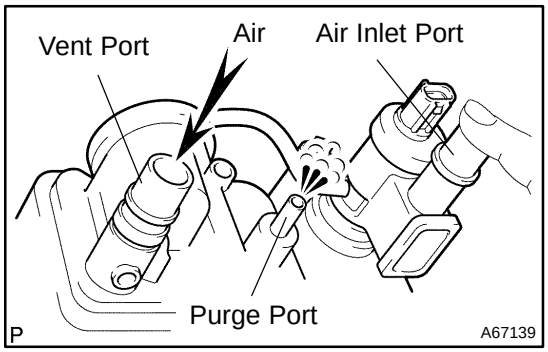

(2) While holding the air inlet port closed, blow air (0.39 kPa, 4.0 gf/cm^2, 0.06 psi) into the vent port, and check that air flows from the purge port.

If the result is not as specified, replace the charcoal canister.

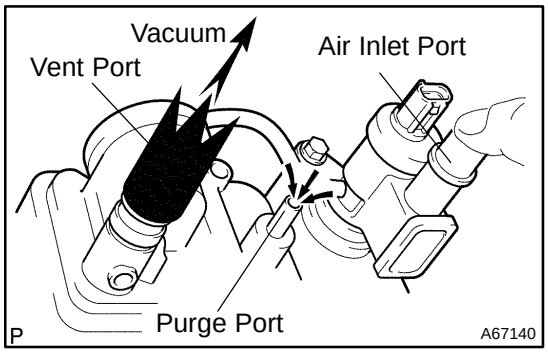

(3) While holding the air inlet port closed, apply vacuum (3.43 kPa, 25.7 gf/cm^2, 1.01 psi) to the vent port, and check that air is sucked in from the purge port.

If the result is not as specified, replace the charcoal canister.

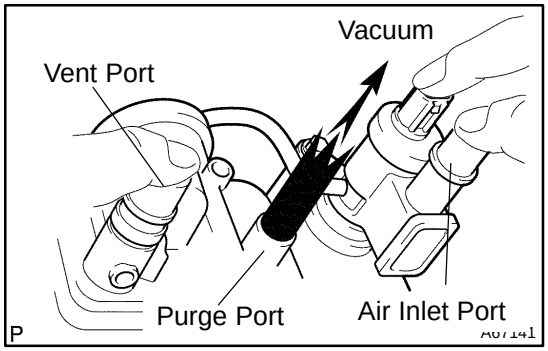

(c) Check air tightness.

(1) While holding the vent and air inlet ports closed, apply vacuum (3.43 kPa, 25.7 gf/cm^2, 1.01 psi) to the purge port, and check that the vacuum is maintained for 1 minute.

HINT:

In order to maintain air tightness, the check should be performed while holding the CCV terminal port closed.

If the result is not as specified, replace the charcoal canister.

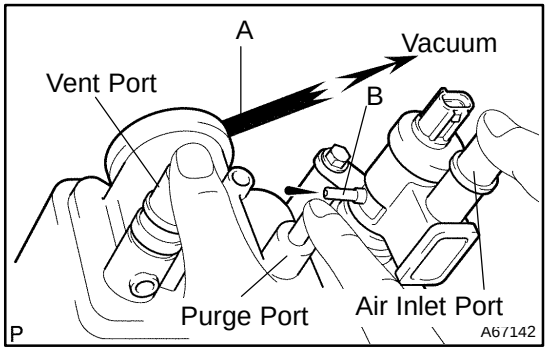

(d) Check the diaphragm.

(1) Remove the air hose between ports A and B.

(2) While holding the vent, purge and air inlet ports closed, apply vacuum (1.42 kPa, 11 mmHg, 0.42 in.Hg) into port A, and check that air is sucked in from port B.

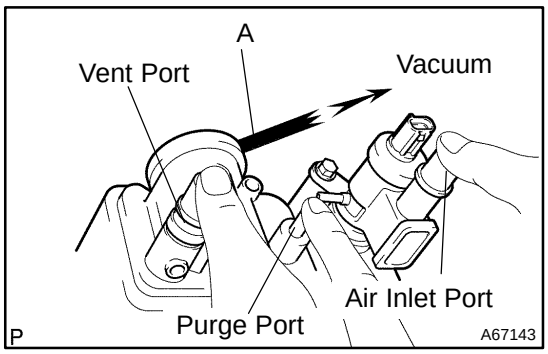

(3) While holding the vent, purge and air inlet ports closed, apply vacuum (1.42 kPa, 11 mmHg, 0.42 in.Hg) into port A, and measure how long it takes for vacuum to drop.

Vacuum drop time: 10 seconds or more

If the result is not as specified, replace the charcoal canister.

(4) Reinstall the air hose between ports A and B.

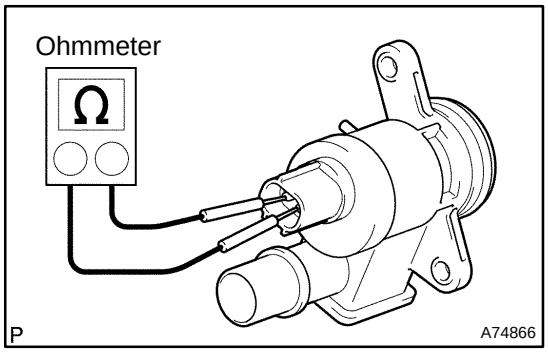

(e) Check the VSV for open circuit.

(1) Measure the resistance between the terminals.

Standard:

Condition	Specified Condition
20°C (68°F)	25 to 30 Ω
100°C (212°F)	32 to 40 Ω

If the result is not as specified, replace the charcoal canister.

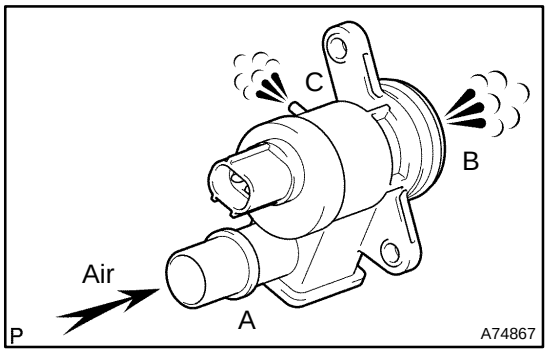

(f) Check VSV operation.

(1) Check that air flows from port A to ports B and C.

If the result is not as specified, replace the charcoal canister.

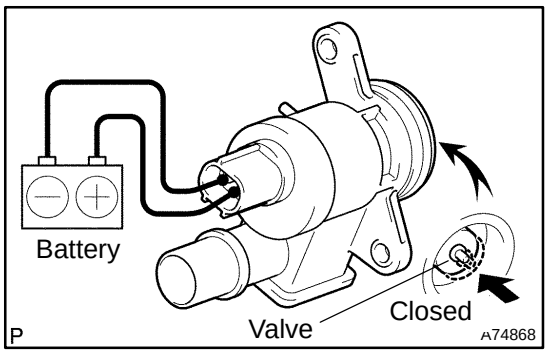

(2) Apply battery positive voltage across the terminals.

(3) Check that the valve is closed.

If the result is not as specified, replace the charcoal canister.

NOTICE:

Incorrect electrode connection causes damage to the VSV. Pay due attention when connecting the lead wire.

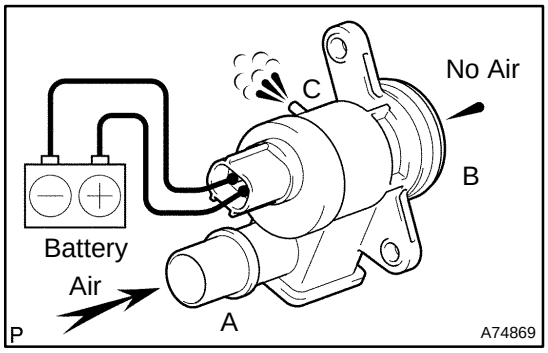

(4) Check that air does not flow from port A to port B.

(5) Check that air flows from port A to port C.

If the result is not as specified, replace the charcoal canister.

NOTICE:

Incorrect electrode connection causes damage to the VSV. Pay due attention when connecting the lead wire.

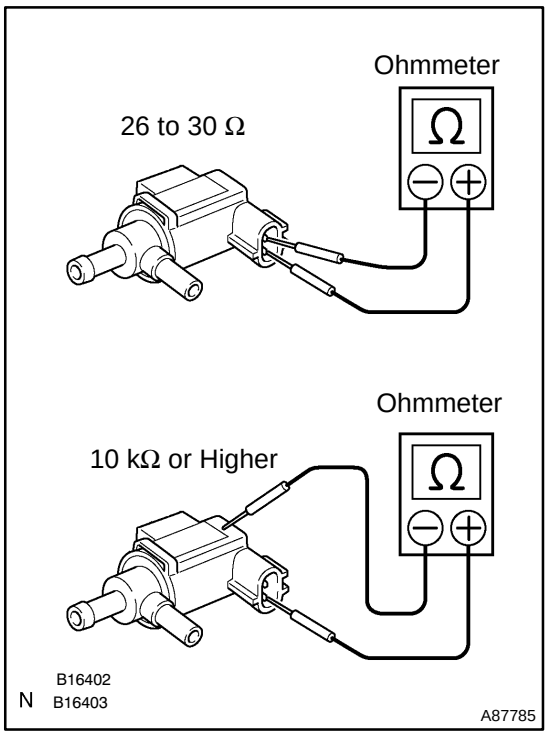

4. INSPECT VACUUM SWITCHING VALVE ASSY FOR EVAP

(a) Check the VSV for open circuit.

(1) Measure the resistance.

Tester Connection	Specified Condition
1 − 2	26 to 30 Ω at 20°C (68°F)
1 − Body ground 2 − Body ground	10 kΩ or higher

If the resistance is not as specified, replace the VSV assy.

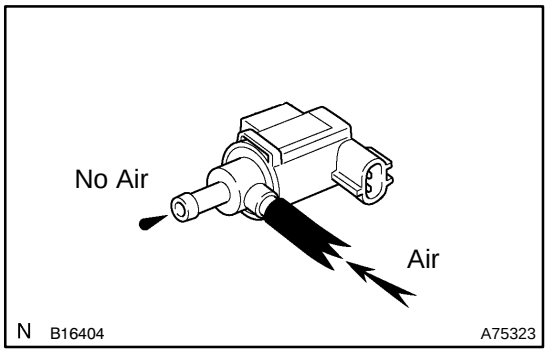

(b) Check VSV operation.

(1) Check that air does not flow from the port as shown in the illustration.

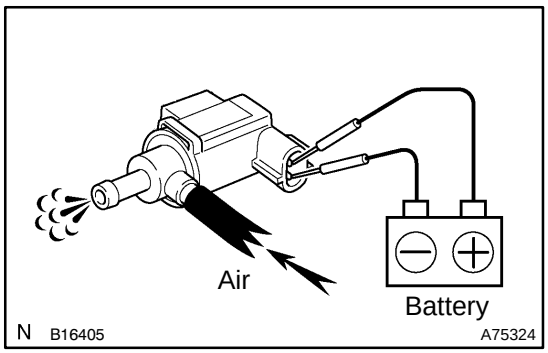

(2) Apply battery positive voltage across the terminals.

(3) Check that air flows from the port as shown in the illustration.

If the result is not as specified, replace the VSV assy.

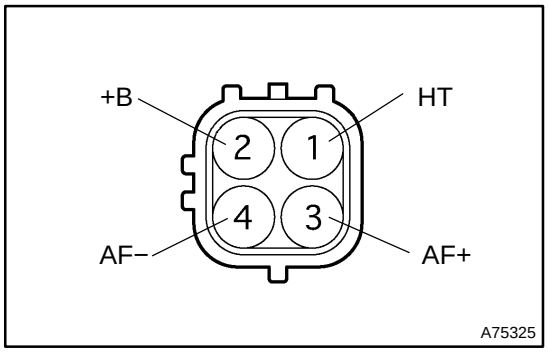

5. INSPECT AIR FUEL RATIO SENSOR

(a) Measure the resistance between terminals 1 (HT) and 2 (+B).

Standard:

Condition	Specified Condition
20°C (68°F)	0.8 to 1.4 Ω
800°C (1,472°F)	1.8 to 3.2 Ω

If the result is not as specified, replace the sensor.

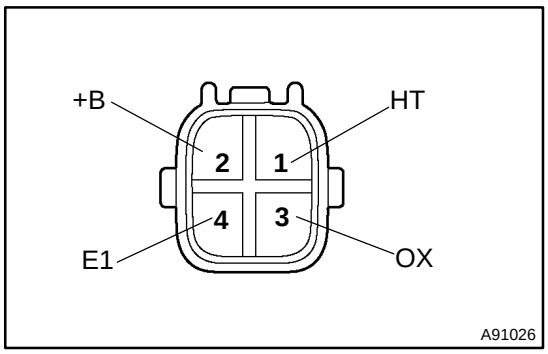

6. INSPECT HEATED OXYGEN SENSOR (BANK 1 SENSOR 2)

(a) Measure the resistance between terminals 1 (HT) and 2 (+B).

Standard:

Condition	Specified Condition
20●C (68●F)	11 to 16 Ω
800●C (1,472●F)	23 to 32 Ω

If the result is not as specified, replace the sensor.

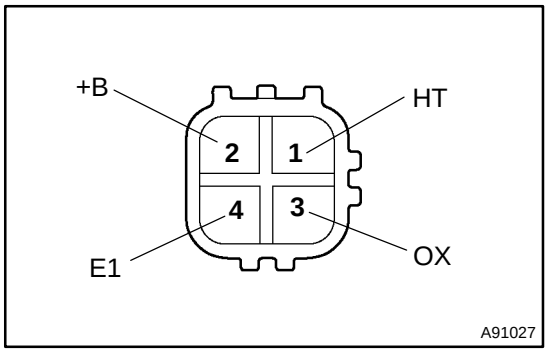

7. INSPECT HEATED OXYGEN SENSOR (BANK 2 SENSOR 2)

(a) Measure the resistance between terminals 1 (HT) and 2 (+B).

Standard:

Condition	Specified Condition
20●C (68●F)	11 to 16 Ω
800●C (1,472●F)	23 to 32 Ω

If the result is not as specified, replace the sensor.

CHARCOAL CANISTER ASSY (1MZ−FE/3MZ−FE)

120BL−03

REPLACEMENT

1. REMOVE FUEL TANK ASSY(See page 11−52)

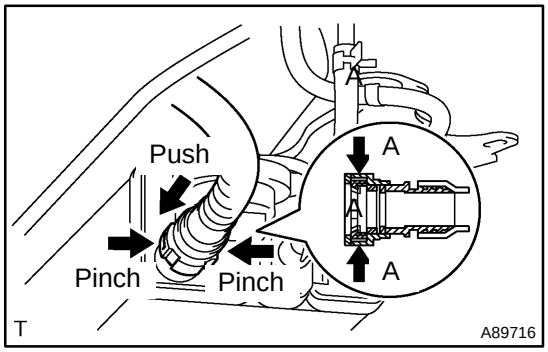

2. REMOVE CHARCOAL CANISTER ASSY

(a) Disconnect the fuel tank vent hose.
  (1) Push the connector deep into the charcoal canister assy to release the locking tab.
  (2) Pinch portion A.
  (3) Pull out the connector.

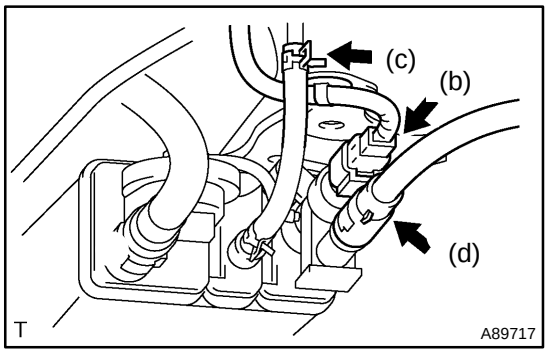

(b) Disconnect the VSV connector for CCV.
(c) Disconnect the fuel emission hose.
(d) Disconnect the air inlet line hose.

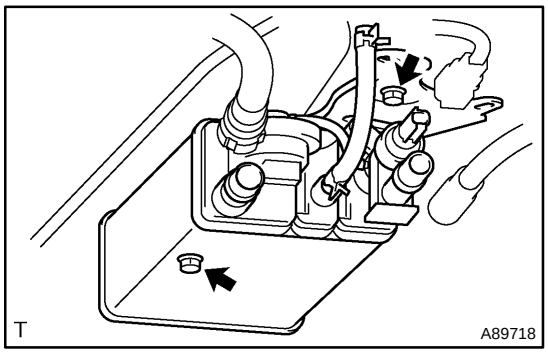

(e) Remove the 2 bolts and charcoal canister.

3. INSTALL CHARCOAL CANISTER ASSY
Torque: 39.2 N·m (400 kgf·cm, 29 in.·lbf)

4. INSTALL FUEL TANK ASSY (See page 11−52)

VENTILATION VALVE SUB−ASSY (1MZ−FE/3MZ−FE)

120BR−05

REPLACEMENT

1. REMOVE VENTILATION VALVE SUB−ASSY

(a) Disconnect the PCV hose from the PCV valve.

(b) Remove the PCV valve.

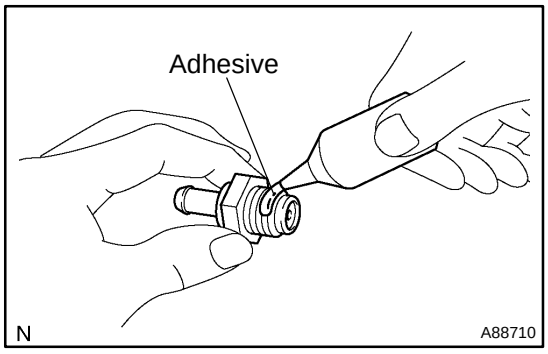

2. INSTALL VENTILATION VALVE SUB−ASSY

(a) Reinstall the PCV valve.

(1) Apply adhesive to 2 or 3 threads.

Adhesive:

Part No. 08833−00070, THREE BOND 1324 or equivalent

(2) Reinstall the PCV valve.

Torque: 19 N·m (193 kgf·cm, 14 ft·lbf)

(b) Connect the PCV hose to the PCV valve.

INTAKE AIR CONTROL SYSTEM (2AZ−FE (PZEV)) (From July, 2003)

1306I−02

ON−VEHICLE INSPECTION

1. CHECK INTAKE MANIFOLD RUNNER VALVE ASSY

(a) Connect the hand−held tester to the DLC3.

(b) Turn the ignition switch ON.

(c) Select IACV MOTOR from the ACTIVE TEST menu.

(d) Check that the voltage output (IACV POSITION) in the DATA LIST indicates the standard value.

Standard:

Condition	Specified Codition
IAC valve open	3.0 to 4.2 V
IAC valve close	0.3 to 1.0 V

1306J–02

INSPECTION

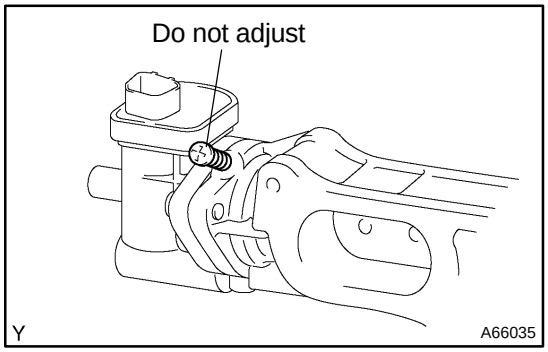

1. INSPECT INTAKE MANIFOLD RUNNER VALVE ASSY

(a) Check the intake manifold runner valve.

(1) Check that intake manifold runner valve shaft is not rickety.

NOTICE:

Do not adjust the screw.

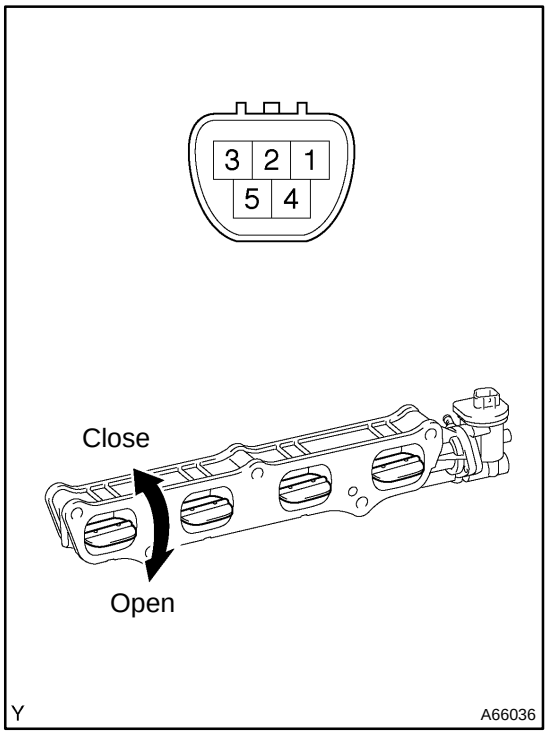

(b) Check the intake manifold runner valve operation.

(1) Apply battery positive and negative voltages across the terminals.

Standard:

Measuring Condition	Operation
Battery positive − Terminal 4 Battery negative − Terminal 5	Close
Battery positive − Terminal 5 Battery negative − Terminal 4	Open

(2) Check that the intake manifold runner valve opens and closes smoothly.

If the result is not as specified, replace the intake manifold runner valve assy.

NOTICE:

Do not apply the battery voltage to the intake manifold runner valve for more than 1 minute.

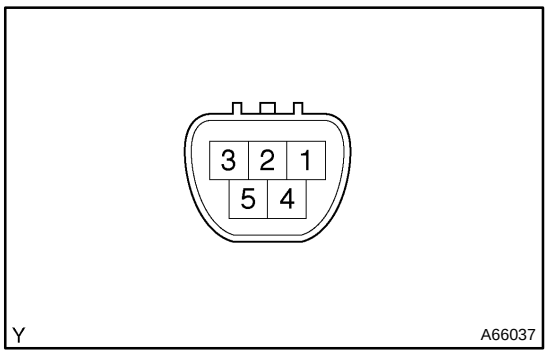

(c) Check the resistance.

(1) Using an ohmmeter, measure the resistance between the terminals.

Standard:

Tester Connection	Specified Condition
4 − 5	3.0 to 10 Ω at 20 °C (68 °F)

If the result is not as specified, replace the intake manifold runner valve assy.

INTAKE MANIFOLD RUNNER VALVE ASSY (2AZ–FE (PZEV)) (From July, 2003)

1306L–02

COMPONENTS

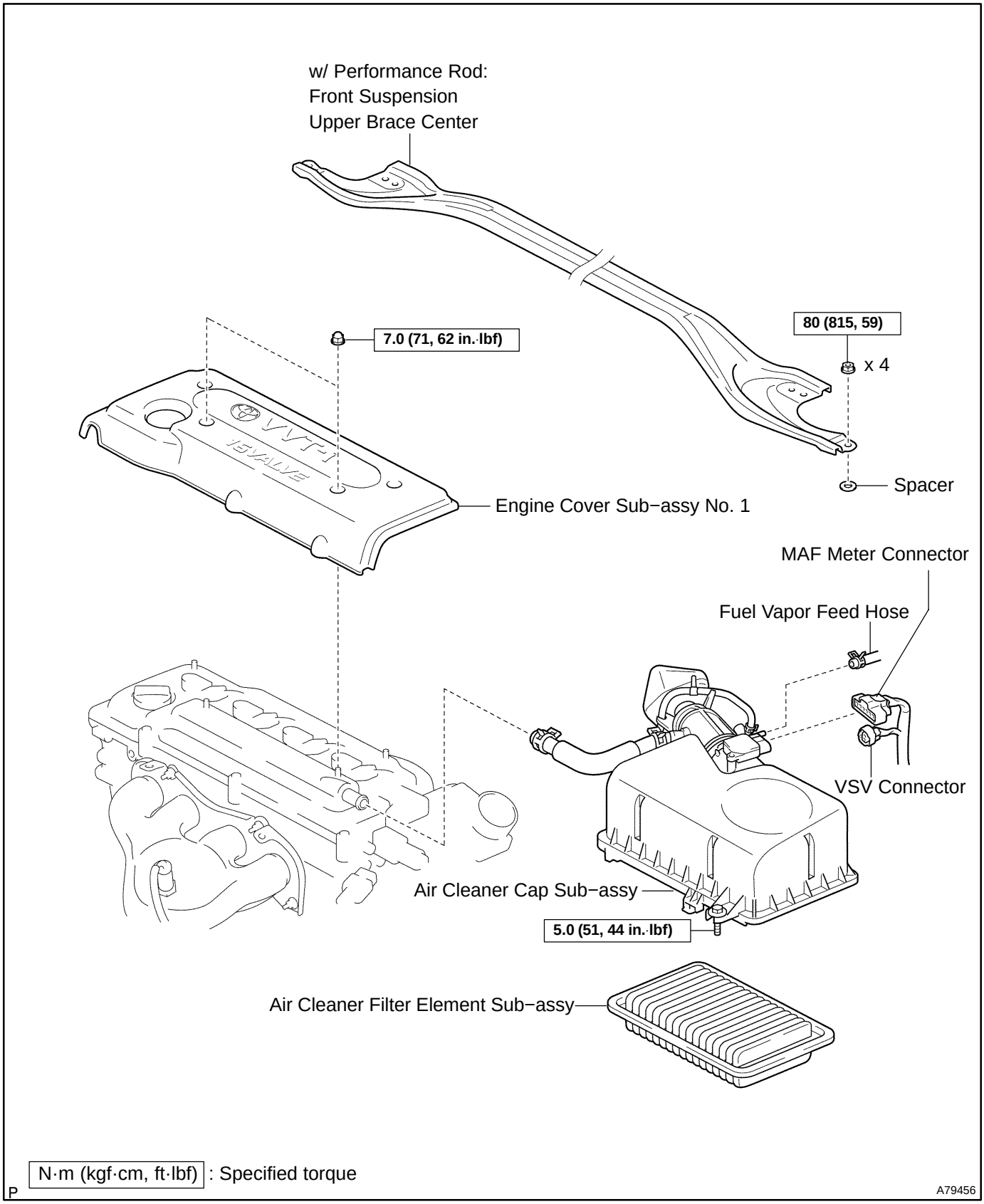

N·m (kgf·cm, ft·lbf) : Specified torque

P

A79456

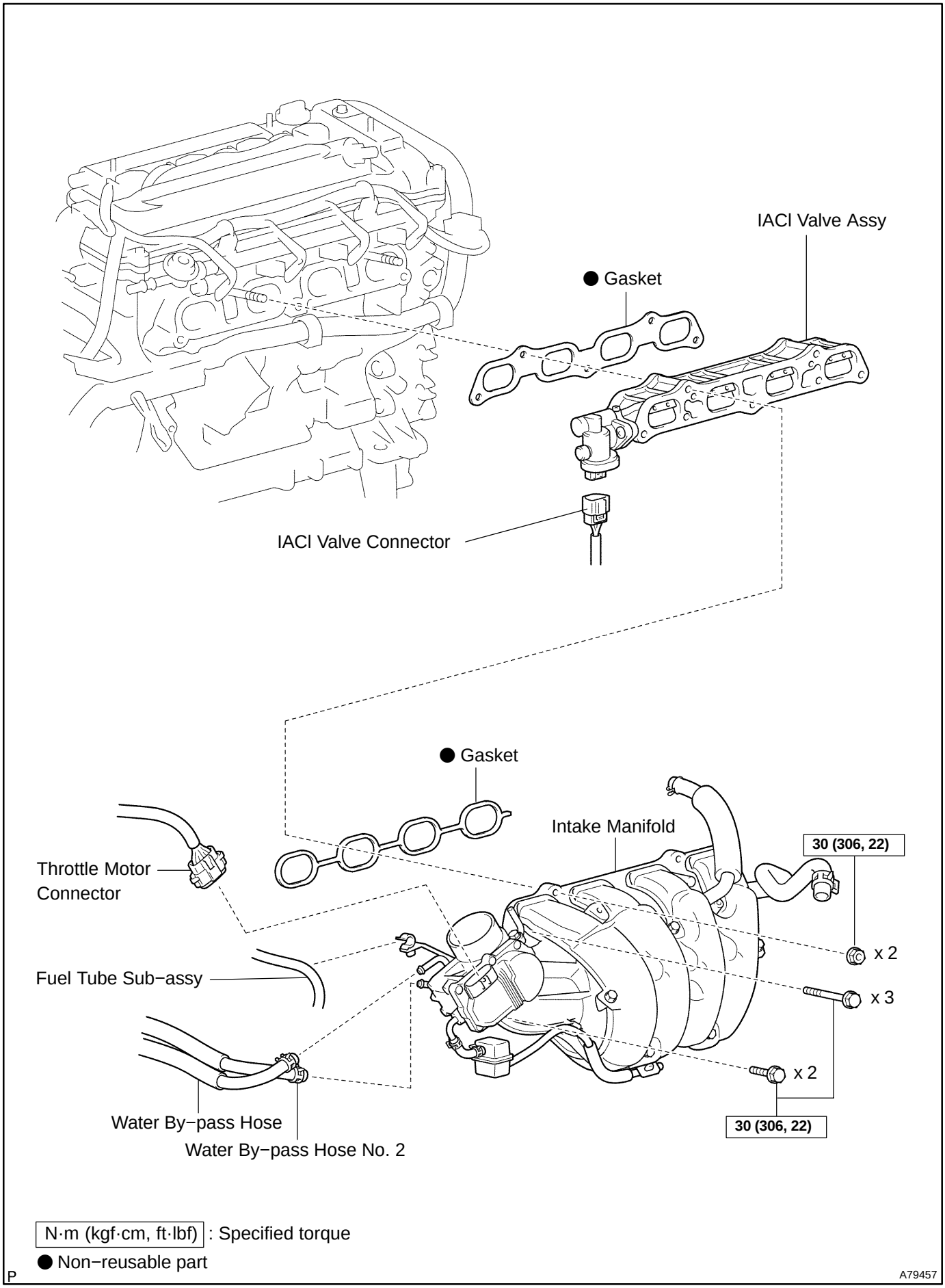

N·m (kgf·cm, ft·lbf) : Specified torque

● Non−reusable part

P

A79457

1306M−02

REPLACEMENT

1. DRAIN ENGINE COOLANT (See page 16−6)

2. REMOVE FRONT SUSPENSION UPPER BRACE CENTER (W/ PERFORMANCE ROD)

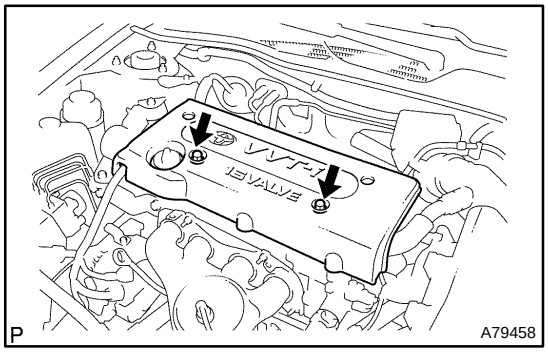

3. REMOVE ENGINE COVER SUB−ASSY NO.1

(a) Remove the 2 nuts and engine cover.

4. REMOVE AIR CLEANER CAP SUB−ASSY

(a) Disconnect the MAF meter connector.
(b) Disconnect the VSV connector.
(c) Disconnect the fuel vapor feed hose No. 2.
(d) Disconnect the ventilation hose.
(e) Disconnect the fuel vapor feed hose No. 1.
(f) Loosen the 2 air cleaner cap bolts.
(g) Lock the air cleaner hose clamp and remove the air cleaner cap together with the air cleaner hose.

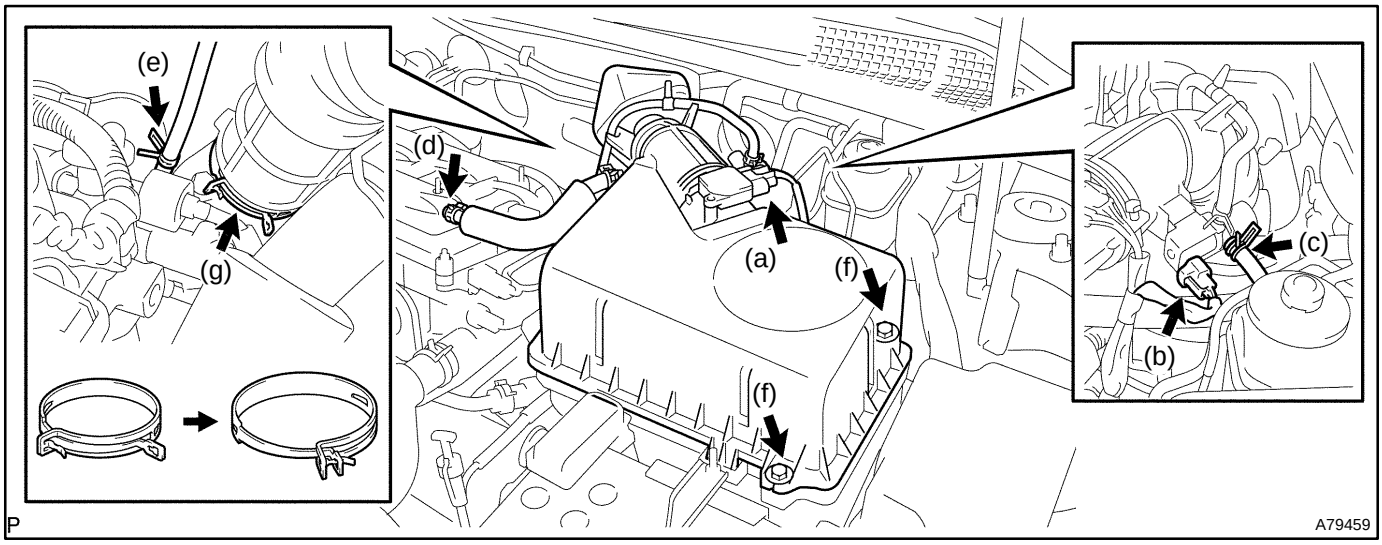

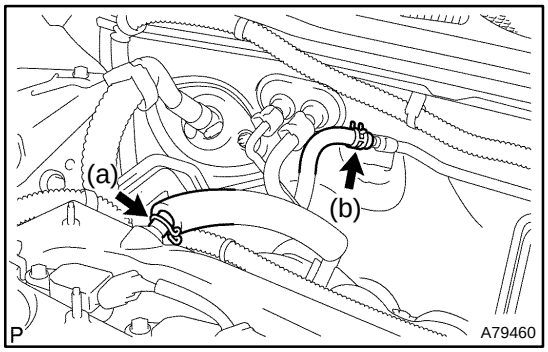

5. REMOVE INTAKE MANIFOLD

(a) Disconnect the ventilation hose No. 2.
(b) Disconnect the union to connector tube hose.

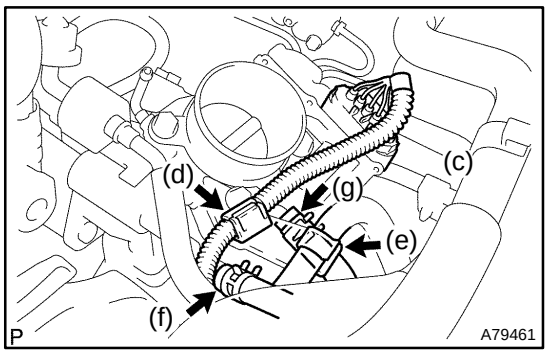

(c) Disconnect the throttle motor connector.
(d) Remove the wire harness from the wire harness clamp.
(e) Remove the fuel tube from the fuel pipe support.
(f) Disconnect the water by−pass hose No. 2
(g) Disconnect the water by−pass hose.

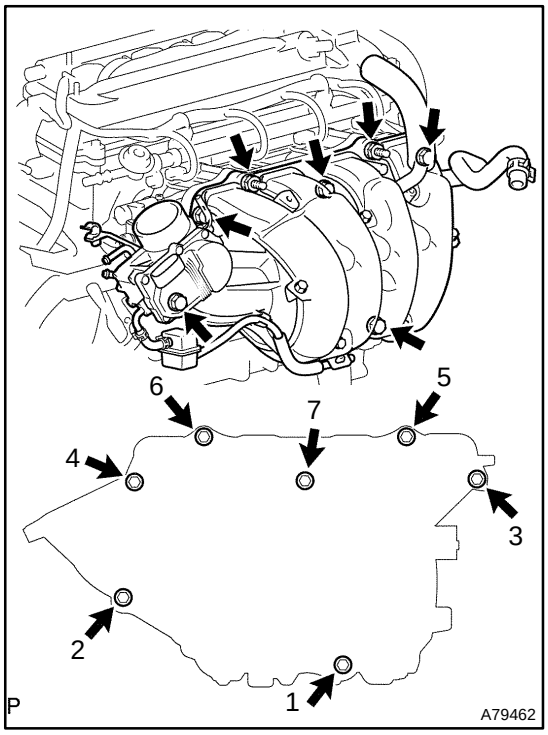

(h) In order to remove the intake manifold, Uniformly remove the 5 bolts and 2 nuts in the sequence shown in the illustration.
(i) Remove the gasket from the intake manifold.

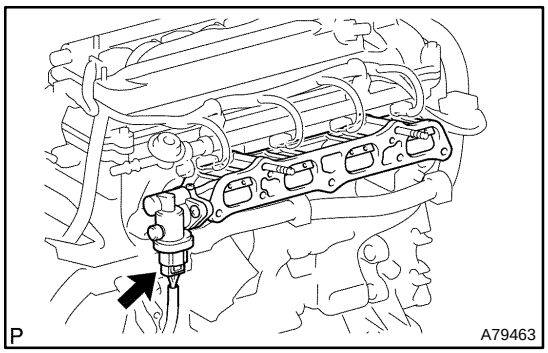

6. REMOVE INTAKE AIR CONTROL VALVE ASSY
(a) Disconnect the IAC valve connector.
(b) Remove the IAC valve and gasket from the cylinder head.

7. INSTALL INTAKE AIR CONTROL VALVE ASSY
(a) Install a new gasket and the IAC valve to the cylinder head.
(b) Connect the IAC valve connector.

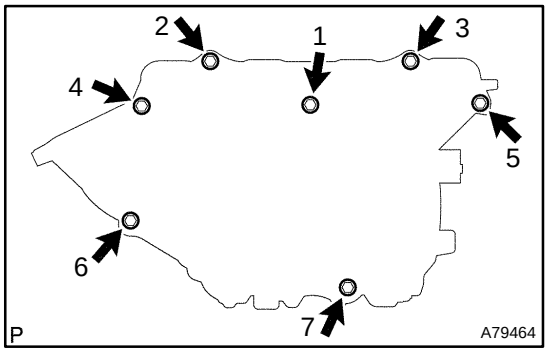

8. INSTALL INTAKE MANIFOLD
(a) Install a new gasket to the intake manifold.
(b) Install the intake manifold with the 5 bolts and 2 nuts. Uniformly tighten the bolts and nuts in the sequence shown in the illustration.
Torque: 30 N·m (306 kgf·cm, 22 ft·lbf)
(c) Connect the water by−pass hose.
(d) Connect the water by−pass hose No. 2
(e) Install the fuel tube to the fuel pipe support.
(f) Install the wire harness to the wire harness clamp.

(g) Connect the throttle motor connector.
(h) Connect the union to connector tube hose.
(i) Connect the ventilation hose No. 2.

9. INSTALL AIR CLEANER CAP SUB−ASSY
Torque: 5.0 N·m (51 kgf·cm, 44 in.·lbf)

10. ADD ENGINE COOLANT (See page 16−6)

11. CHECK FOR ENGINE COOLANT LEAKS (See page 16−1)

12. INSTALL ENGINE COVER SUB−ASSY NO.1
Torque: 7.0 N·m (71 kgf·cm, 62 in.·lbf)

13. INSTALL FRONT SUSPENSION UPPER BRACE CENTER (W/ PERFORMANCE ROD)
Torque: 80 N·m (815 kgf·cm, 59 ft·lbf)

INTAKE AIR CONTROL SYSTEM (1MZ−FE/3MZ−FE)

1307S−01

ON−VEHICLE INSPECTION

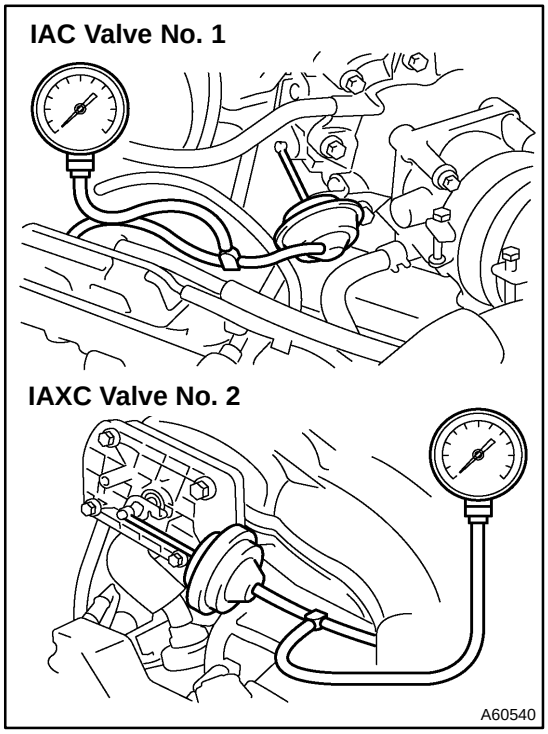

1. CHECK INTAKE AIR CONTROL SYSTEM

(a) Using a 3−way connector, connect a vacuum gauge to the actuator hose.

(b) Connect the hand−held tester to the DLC3.

(c) Start the engine.

(d) On the hand−held tester, enter the ACTIVE TEST mode.

Standard:

Switch Condition	Vacuum
VSV ON	Approx. 27.6 kPa (200 mmHg, 7.9 in.Hg)
VSV OFF	0 kPa (0 mmHg, 0 in.Hg)

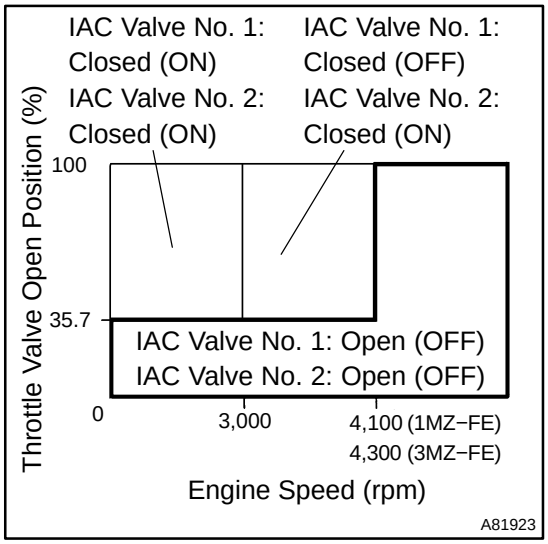

(e) Move the shift lever to the P position.

(f) While operating the accelerator pedal, check open and closed status of the IAC valve No. 1 (IMZ−FE only) and No. 2.

HINT:

Values indicated in the illustration are for reference only. The throttle valve open position varies by engine speed.

INSPECTION

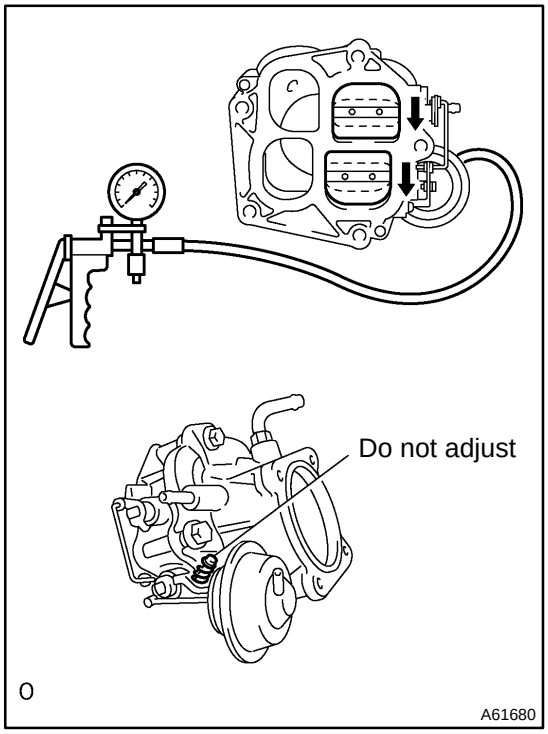

1. INSPECT INTAKE AIR CONTROL VALVE ASSY NO.1 (1MZ−FE ONLY)

(a) With vacuum of 26.7 kPa (200 mm Hg, 7.9 in. Hg) applied to the actuator, check that the IAC valve closes.

(b) 1 minute after applying the vacuum, check that the IAC valve remains closed.

If the result is not as specified, replace the IAC valve assy No. 1.

NOTICE:

Do not adjust the screw.

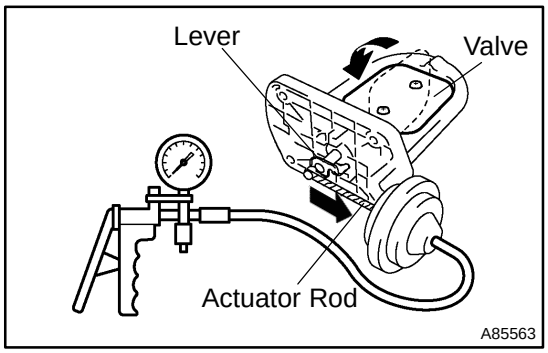

2. INSPECT INTAKE AIR CONTROL VALVE ASSY NO.2

(a) Apply 26.7 kPa (200 mmHg, 7.9 in.Hg) of vacuum to the actuator. Check if the actuator rod pulls the lever and causes the valve to rotate open, as shown in the illustration.

(b) One minute after applying the vacuum, check that the actuator rod does not return.

If the result is not as specified, replace the IAC valve assy No. 2.

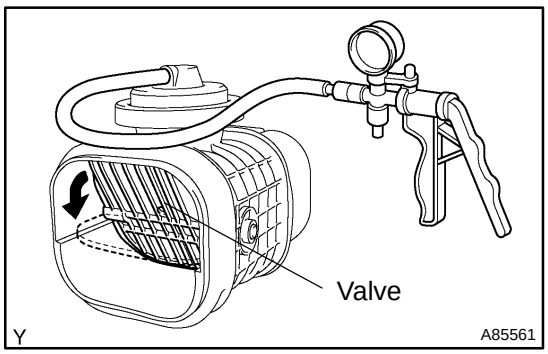

3. INSPECT INTAKE AIR CONTROL VALVE ASSY NO.3

(a) Apply 26.7 kPa (200 mmHg, 7.9 in.Hg) of vacuum to the actuator. Check if the valve rotates open, as shown in the illustration.

(b) Apply the vacuum for one minute. The actuator should continue to be keeping the valve open.

If the result is not as specified, replace the IAC valve assy No. 3.

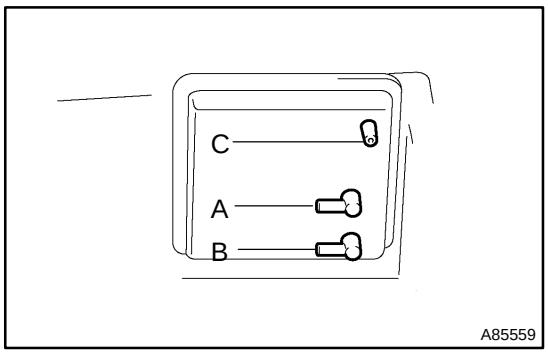

4. INSPECT VACUUM SWITCHING VALVE ASSY FOR ACIS

(a) Cover port C with your finger, and check that air flows from port B to port A.

(b) Cover ports C with your finger, and check that air does not flow from port A to port B.

(c) Cover port A and C with your fingers, and apply 60 kPa (450 mmHg, 18 in.Hg) of vacuum to port B. Check that there is no change in the vacuum after one minute.

If the result is not as specified, replace air cleaner cap.

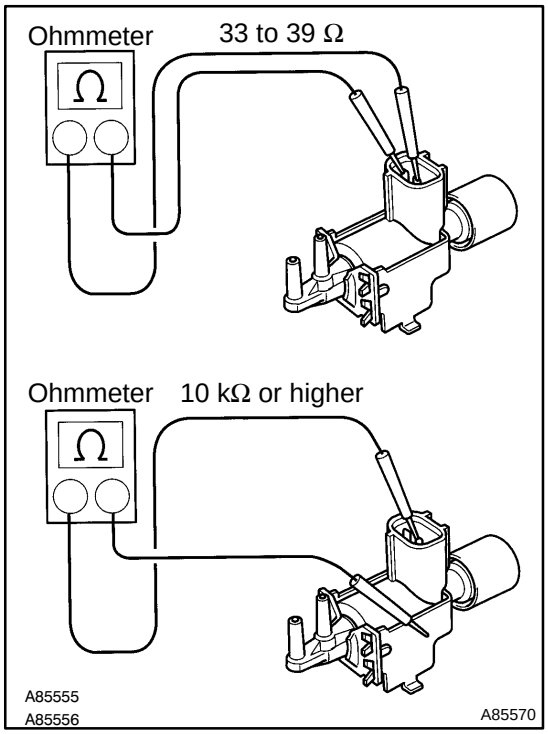

5. INSPECT VALVE ASSY, VACUUM SWITCHING FOR IAC VALVE NO.1 (1MZ−FE ONLY) AND NO.2

(a) Check the VSV resistance.

Standard:

Tester Connection	Specified Condition
1 − 2	33 to 39 Ω at 20°C (68°F)
1 − Body ground 2 − Body ground	10 kΩ or higher

If the result is not as specified, replace the VSV assy.

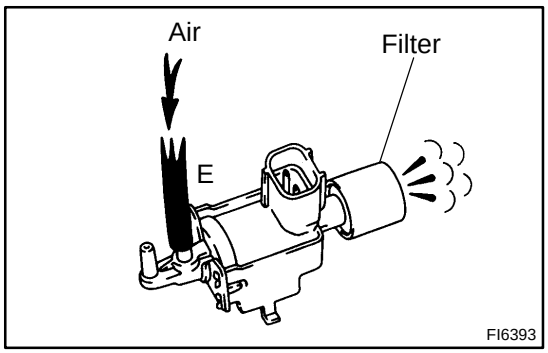

(b) Check VSV operation.

(1) Check that air flows from port E to the filter.

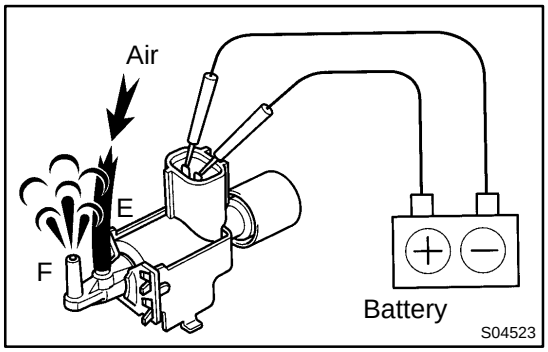

(2) Apply battery voltage across the terminals.

(3) Check that air flows from port E to port F.

If the result is not as specified, replace the VSV assy.

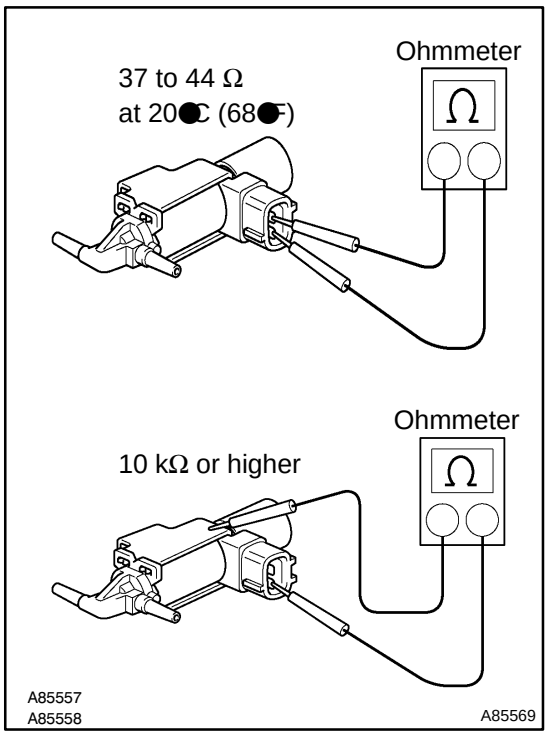

6. INSPECT VACUUM SWITCHING VALVE ASSY FOR IAC VALVE ASSY NO. 3

(a) Check the VSV resistance.

Standard:

Tester Connection	Specified Condition
1 − 2	37 to 44 Ω at 20°C (68°F)
1 − Body ground 2 − Body ground	10 kΩ or higher

If the result is not as specified, replace the VSV assy No. 3.

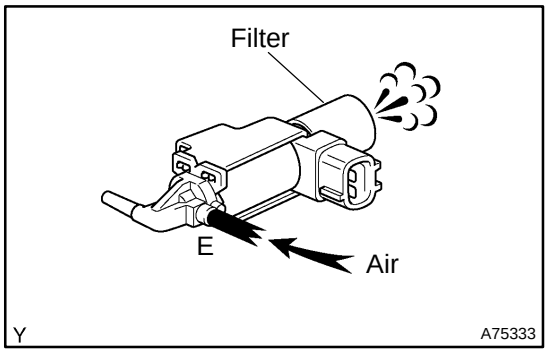

(b) Check VSV operation.

(1) Check that air flows from port E to the filter.

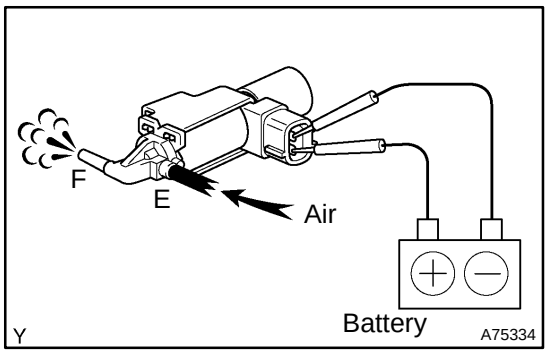

(2) Apply battery voltage across the terminals. Check that air flows from port E to F.

If the result is not as specified, replace the VSV assy No. 3.

INTAKE AIR CONTROL VALVE ASSY NO.1 (1MZ−FE)

1307R−02

REPLACEMENT

1. **DRAIN ENGINE COOLANT (See page 16−27)**
2. **REMOVE FRONT SUSPENSION UPPER BRACE CENTER (W/ PERFORMANCE ROD)**
3. **REMOVE V−BANK COVER SUB−ASSY (See page 14−164)**
4. **REMOVE AIR CLEANER CAP SUB−ASSY**
5. **REMOVE THROTTLE BODY ASSY (See page 10−18)**

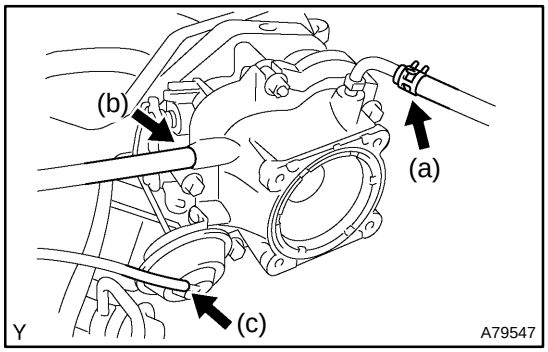

6. **REMOVE INTAKE AIR CONTROL VALVE ASSY**

(a) Disconnect the union to check valve hose.
(b) Disconnect the fuel vapor feed hose No. 2.
(c) Disconnect the vacuum hose.

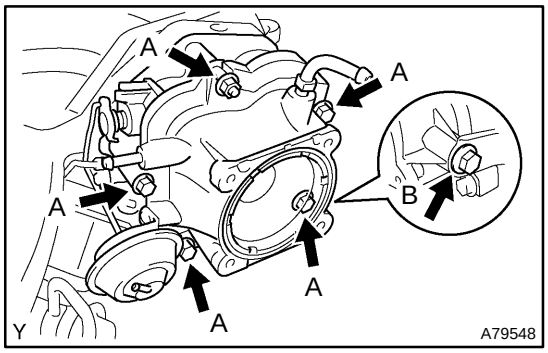

(d) Remove the 5 bolts, nut and IAC valve.
(e) Remove the gasket from the intake air surge tank.

7. **INSTALL INTAKE AIR CONTROL VALVE ASSY**

(a) Install a new gasket to the intake air surge tank.
(b) Install the IAC valve with the 5 bolts and nut.
Torque:
21 N·m (214 kgf·cm, 15 ft·lbf) for bolt A and nut A
20 N·m (204 kgf·cm, 15 ft·lbf) for bolt B
(c) Connect the vacuum hose.
(d) Connect the fuel vapor feed hose No. 2.
(e) Connect the union to check valve hose.

8. **INSTALL THROTTLE BODY ASSY (See page 10−18)**
9. **INSTALL AIR CLEANER CAP SUB−ASSY**
10. **ADD ENGINE COOLANT (See page 16−27)**
11. **CHECK FOR ENGINE COOLANT LEAKS (See page 16−21)**
12. **INSTALL V−BANK COVER SUB−ASSY (See page 14−164)**
13. **INSTALL FRONT SUSPENSION UPPER BRACE CENTER (W/ PERFORMANCE ROD)**
Torque: 80 N·m (815 kgf·cm, 59 ft·lbf)

INTAKE AIR CONTROL VALVE ASSY NO.2 (1MZ−FE/3MZ−FE)

REPLACEMENT

1307P−02

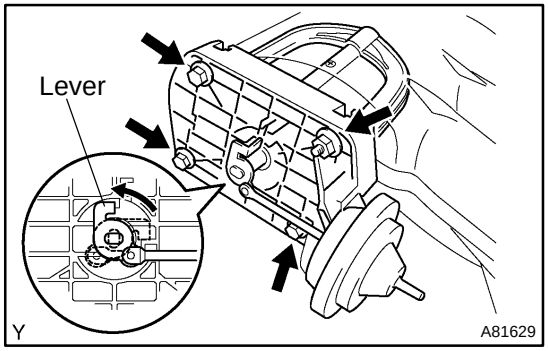

1. REMOVE INTAKE AIR CONTROL VALVE ASSY NO.2

(a) Remove the 3 bolts and nut.

(b) Rotate the lever to the closed position as shown in the illustration and pull out the IAC valve.

(c) Remove the gasket from the intake air surge tank.

2. INSTALL INTAKE AIR CONTROL VALVE ASSY NO.2

(a) Install a new gasket to the intake air surge tank.

(b) Install the IAC valve with the 3 bolts and nut.

Torque: 10 N·m (102 kgf·cm, 7 ft·lbf)

ENGINE (2AZ−FE)(From July, 2003)

1416−03

INSPECTION

1. **INSPECT ENGINE COOLANT (See page 16−1)**
2. **INSPECT ENGINE OIL (See page 17−1)**
3. **INSPECT BATTERY (See page 19−14)**
4. **INSPECT AIR CLEANER FILTER ELEMENT SUB−ASSY (See page 99−5)**
5. **INSPECT SPARK PLUG (See page 18−3)**

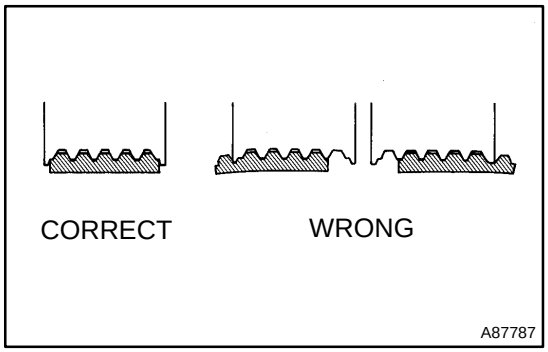

6. INSPECT V−RIBBED BELT

HINT:

- After installing the drive belt, check that it fits properly in the ribbed grooves. Check with your hand to confirm that the belt has not slipped out of the groove on the bottom of the crank pulley.
- ”New belt” is a belt which has been used less than 5 minutes on a running engine.
- ”Used belt” is a belt which has been used on a running engine for 5 minutes or more.
- After installing a new belt, run the engine for approximately 5 minutes and then recheck the tension.

7. INSPECT IGNITION TIMING

(a) Warm up the engine.

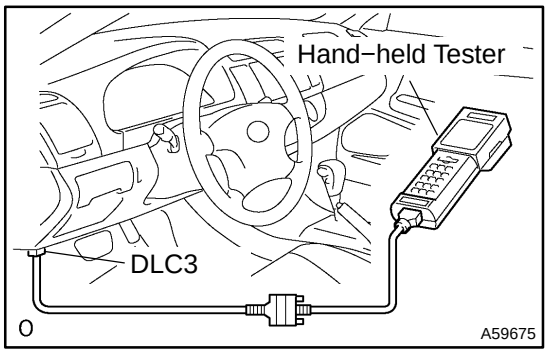

(b) When using the hand−held tester:
Check the ignition timing.
(1) Connect the hand−held tester to the DLC3.
(2) Enter DATA LIST MODE on the hand−held tester.
Ignition timing: 8 to 12 BTDC @ idle

HINT:
Please refer to the hand−held tester operator’s manual for help on selecting the DATA LIST.

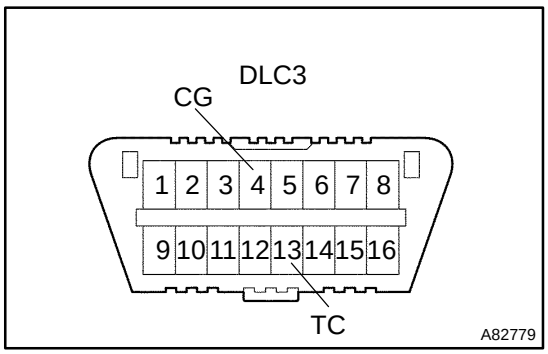

(c) When not using the hand−held tester:
Check the ignition timing.
(1) Using SST, connect terminals 13 (TC) and 4 (CG) of the DLC3.
SST 09843−18040

NOTICE:

- **Confirm the terminal numbers before connecting them. Connection with a wrong terminal can damage the engine.**
- **Turn off all electrical systems before connecting the terminals.**
- **Perform this inspection after the cooling fan motor is turned off.**

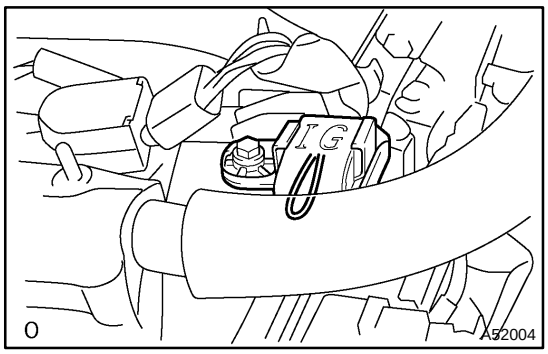

(2) Remove the cylinder head cover No. 2.
(3) Pull out the wire harness as shown in the illustration. Connect the clip of the timing light to the engine.

NOTICE:

- **Use a timing light which can detect the first signal.**
- **After checking, be sure to tape the wire harness.**

(4) Check the ignition timing at idle.

Ignition timing: 8 to 12 BTDC @ idle

NOTICE:

When checking the ignition timing, the transmission should be in the neutral position.

HINT:

After engine rpm is kept at 1,000 to 1,300 rpm for 5 seconds, check that it returns to idle speed.

(5) Disconnect terminals 13 (TC) and 4 (CG) of the DLC3.
(6) Check the ignition timing at idle.

Ignition timing: 5 to 15 BTDC @ idle

(7) Confirm that ignition timing moves to the advanced angle side when the engine rpm is increased.
(8) Remove the timing light.

8. INSPECT ENGINE IDLE SPEED

(a) Warm up the engine.

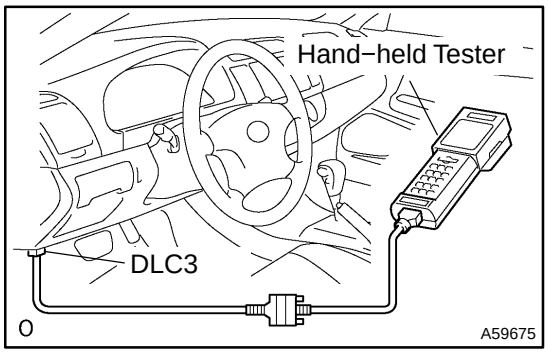

(b) When using the hand−held tester:
Check the idle speed.
(1) Connect the hand−held tester to the DLC3.

HINT:

Please refer to the hand−held tester operator's manual for further details.

(2) Enter DATA LIST MODE on the hand−held tester.

Idle speed:

Item	Specified Condition
M/T	650 to 750 rpm
A/T	610 to 710 rpm

NOTICE:

- **When checking the idle speed, the tranmission should be in the neutral position.**
- **Check idle speed with the cooling fan off.**
- **Switch off all accessories and air conditioning before connecting the hand−held tester.**

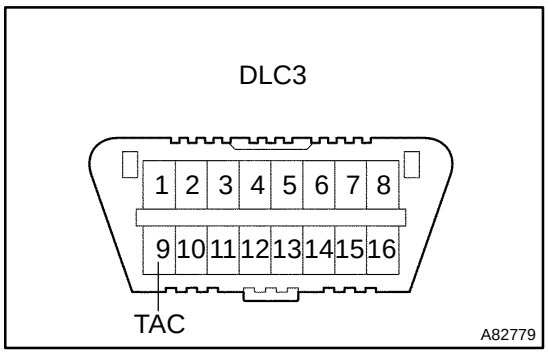

(c) When not using the hand−held tester:
Check the idle speed.
(1) Using SST, connect tachometer tester probe to terminal 9 (TAC) of the DLC3.
SST 09843−18030
(2) Check the idle speed.
Idle speed:

Item	Specified Condition
M/T	650 to 750 rpm
A/T	610 to 710 rpm

9. INSPECT COMPRESSION

(a) Warm up and stop the engine.
(b) Disconnect the injector connectors.
(c) Remove the ignition coils.
(d) Remove the spark plugs.

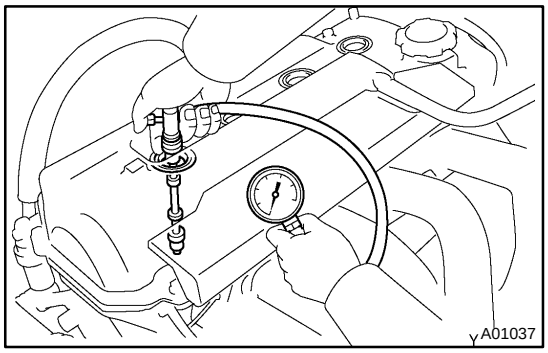

(e) Check the cylinder compression pressure.
(1) Insert a compression gauge into the spark plug hole.
(2) Fully open the throttle.
(3) While cranking the engine, measure the compression pressure.
Compression pressure:

Item	Specified Condition
PZEV	1,300 kPa (13.3 kg/cm^2, 189 psi)
Except PZEV	1,360 kPa (13.9 kg/cm^2, 198 psi)

Minimum pressure:

Item	Specified Condition
PZEV	1,000 kPa (10.2 kg/cm^2, 145 psi)
Except PZEV	980 kPa (10.0 kg/cm^2, 142 psi)

Difference between each cylinder:

Item	Specified Condition
PZEV	29 kPa (0.3 kg/cm^2, 4.3 psi)
Except PZEV	100 kPa (1.0 kg/cm^2, 14 psi)

NOTICE:

- **Always use a fully charged battery to obtain engine speed of 250 rpm or more.**
- **Check other cylinder's compression pressure in the same way.**
- **This measurement must be done as quickly as possible.**

(4) If the cylinder compression is low, pour a small amount of engine oil into the cylinder through the spark plug hole and inspect again.

HINT:

- If adding oil increases the compression, the piston rings and/or cylinder bore may be worn or damaged.
- If pressure stays low, a valve may be stuck or seated improperly, or there may be leakage in the gasket.

10. INSPECT CO/HC

(a) Start the engine.
(b) Rev the engine at 2,500 rpm for approximately 180 seconds.
(c) Insert CO/HC meter testing probe at least 40 cm (1.3 ft) into the tailpipe during idling.
(d) Immediately check CO/HC concentration at idle and/or 2,500 rpm.

HINT:

- Complete the measuring within 3 minutes.
- Check regulations and restrictions in your area when performing 2 mode CO/HC concentration testing (engine check at both idle speed and at 2,500 rpm).

(e) If the CO/HC concentration does not comply with regulations, troubleshoot in the order given below.
  (1) Check A/F sensor operation (see page 05−288).
  (2) See the table below for possible causes, and then inspect and repair.

CO	HC	Problems	Causes
Normal	High	Rough idle	1. Faulty ignitions: ●Incorrect timing ●Fouled, shorted or improperly gapped plugs 2. Incorrect valve clearance 3. Leaky intake and exhaust valves 4. Leaky cylinders
Low	High	Rough idle (fluctuating HC reading)	1. Vacuum leaks: ●PCV hoses ●Intake manifold ●Throttle body ●Brake booster line 2. Lean mixture causing misfire
High	High	Rough idle (black smoke from exhaust)	1. Restricted air filter 2. Plugged PCV valve 3. Faulty SFI system: ●Faulty pressure regulator ●Defective ECT ●Defective MAF meter ●Faulty ECM ●Faulty injectors ●Faulty throttle position sensor

DRIVE BELT (2AZ–FE)(From July, 2003)

1405U–06

REPLACEMENT

1. REMOVE FRONT WHEEL RH
2. REMOVE FRONT FENDER APRON SEAL RH
3. REMOVE ENGINE COVER SUB–ASSY NO.1

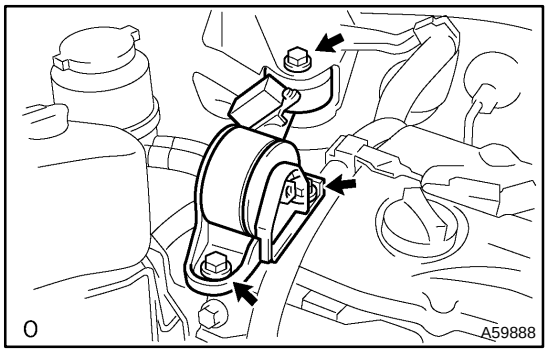

4. REMOVE ENGINE MOVING CONTROL ROD W/BRACKET

(a) Remove the 3 bolts and control rod.

5. REMOVE ENGINE MOUNTING STAY NO.2 RH
6. REMOVE ENGINE MOUNTING BRACKET NO.2 RH

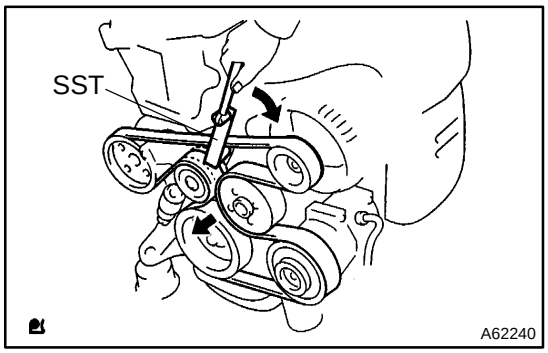

7. REMOVE DRIVE BELT

(a) Slowly turn the belt tensioner clockwise for more than 3 seconds, and remove the drive belt by using SST.
SST 09249–63010

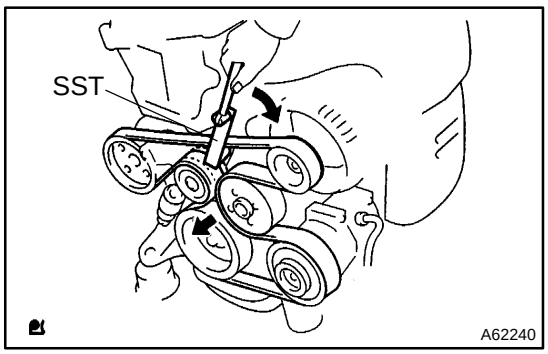

8. INSTALL DRIVE BELT

(a) Slowly turn the belt tensioner clockwise for more than 3 seconds, and install the drive belt by using SST.
SST 09249–63010

9. INSTALL ENGINE MOUNTING BRACKET NO.2 RH
Torque: 52 N·m (531 kgf·cm, 38 ft·lbf)
10. INSTALL ENGINE MOUNTING STAY NO.2 RH
Torque: 64 N·m (653 kgf·cm, 47 ft·lbf)

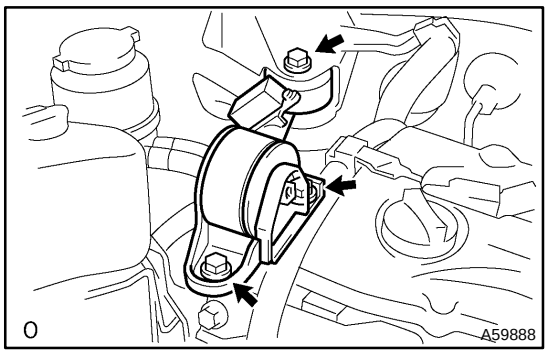

11. INSTALL ENGINE MOVING CONTROL ROD W/BRACKET

(a) Install the engine control rod with the 3 bolts.
Torque: 64 N·m (653 kgf·cm, 47 ft·lbf)

12. INSTALL FRONT WHEEL RH

VALVE CLEARANCE (2AZ−FE)

1417−01

ADJUSTMENT

1. **REMOVE FRONT WHEEL RH**
2. **REMOVE FRONT FENDER APRON SEAL RH**
3. **REMOVE ENGINE COVER SUB−ASSY NO.1**
4. **REMOVE SPARK PLUG**
5. **DISCONNECT VENTILATION HOSE**
6. **DISCONNECT VENTILATION HOSE NO.2**
7. **DISCONNECT ENGINE WIRE**

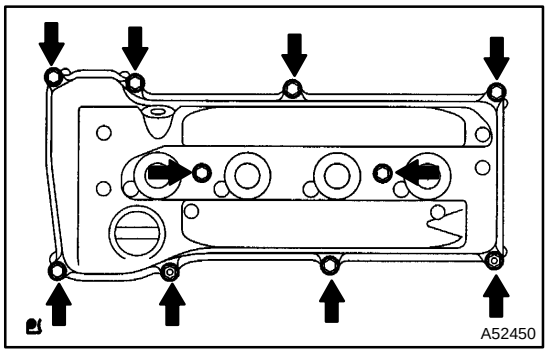

8. REMOVE CYLINDER HEAD COVER SUB−ASSY

(a) Remove the bolt and disconnect the engine wire harness clamp.

(b) Remove the 8 bolts, 2 nuts, cylinder head cover and gasket.

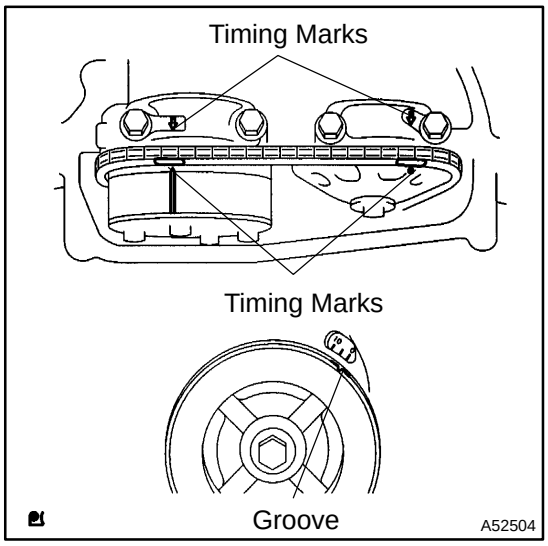

9. SET NO. 1 CYLINDER TO TDC/COMPRESSION

(a) Turn the crankshaft pulley, and align its groove with timing mark 0 of the timing chain cover.

(b) Check that the timing marks of the camshaft timing gear and sprocket are aligned with the timing marks of bearing caps No. 1 and No. 2, as shown in the illustration.

10. INSPECT VALVE CLEARANCE

HINT:

Inspect and adjust the valve clearance when the engine is cold.

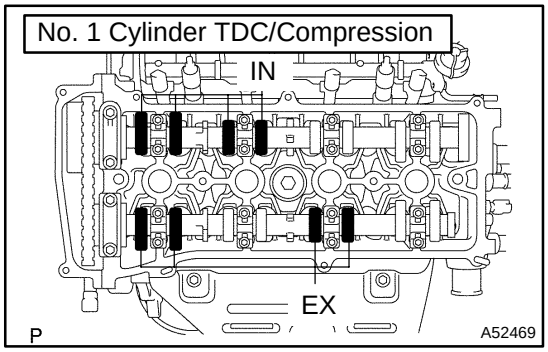

(a) Check only the valves indicated on the left.
   (1) Using a feeler gauge, measure the clearance between each valve lifter and camshaft.
   (2) Record valve clearance measurements that are out of the specified range. These measurements will be used later to determine the size of the adjustment shim to be installed.

Valve clearance (Cold):

Item	Specified Condition
Intake	0.19 to 0.29 mm (0.008 to 0.011 in.)
Exhaust	0.30 to 0.40 mm (0.012 to 0.016 in.)

(b) Turn the crankshaft clockwise 1 revolution (360) and set the No. 4 cylinder to TDC/compression.

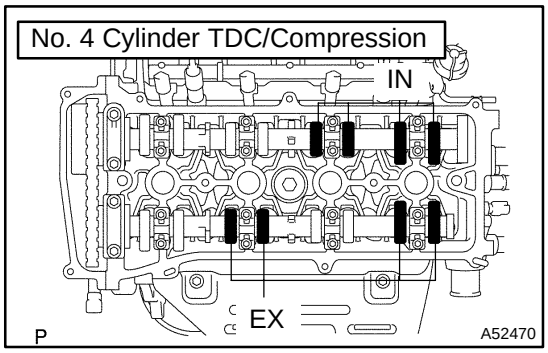

(c) Check only the valves indicated on the left.
   (1) Using a feeler gauge, measure the clearance between each valve lifter and camshaft.
   (2) Record valve clearance measurements that are out of the specified range. These measurements will be used later to determine the size of the adjustment shim to be installed.

Valve clearance (Cold):

Item	Specified Condition
Intake	0.19 to 0.29 mm (0.008 to 0.011 in.)
Exhaust	0.30 to 0.40 mm (0.012 to 0.016 in.)

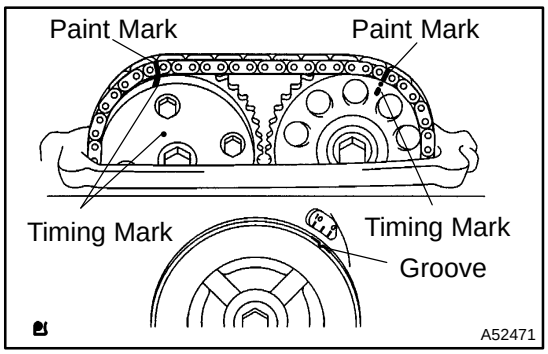

11. ADJUST VALVE CLEARANCE

NOTICE:

Be sure not to turn the crankshaft without the chain tensioner.

(a) Turn the crankshaft clockwise 1 revolution (360) and set the No. 1 cylinder to the TDC/compression.

(b) Place paint marks on the timing chain and camshaft timing gear/sprocket.

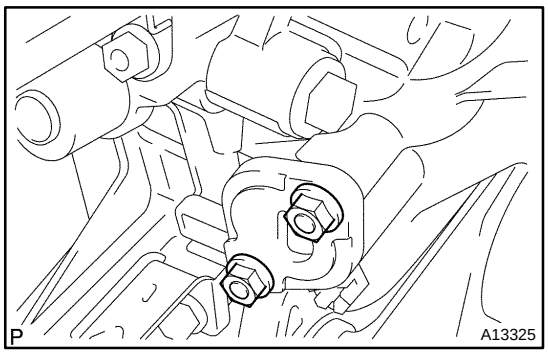

(c) Remove the 2 bolts and chain tensioner.

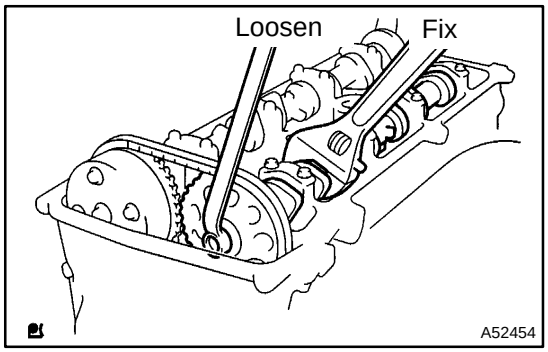

(d) Remove the No. 2 camshaft.

(1) Fix the camshaft with a wrench and then loosen the sproket bolt.

NOTICE:

Be careful not to damage the valve lifter.

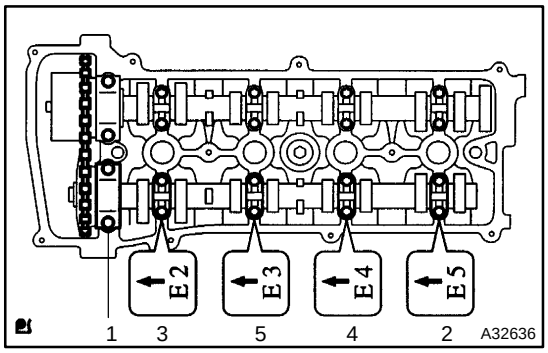

(2) Uniformly loosen and remove the No. 2 camshaft's 10 bearing cap bolts in the sequence shown in the illustration. Then remove the 5 bearing caps.

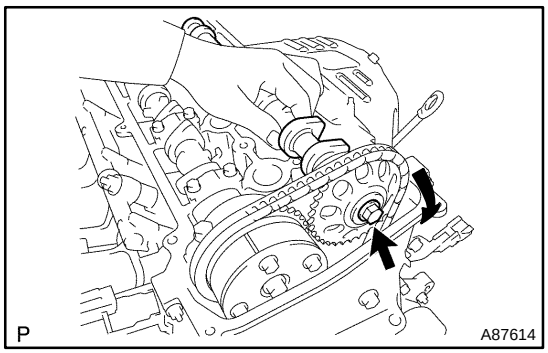

(3) Raise the No. 2 camshaft and remove it. Then remove the sprocket bolt.

(4) Remove the camshaft timing sprocket and the timing chain from the No. 2 camshaft.

(5) Remove the camshaft timing sprocket from the timing chain.

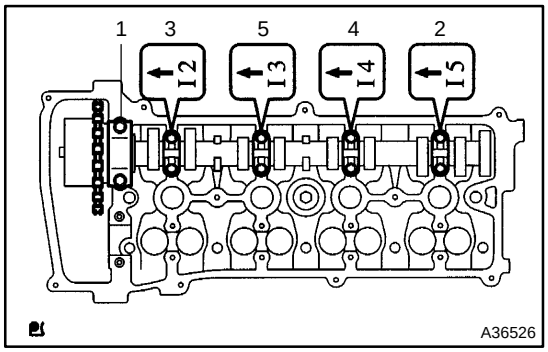

(e) Remove the camshaft.

(1) Uniformly loosen and remove the camshaft's 10 bearing cap bolts in the sequence shown in the illustration. Then remove the 5 bearing caps.

(2) Remove the camshaft.

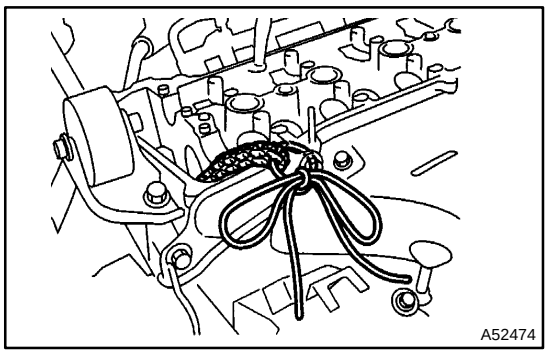

(f) Tie the timing chain with a string.

NOTICE:

Be careful not to drop anything inside the timing chain cover.

(g) Remove the valve lifters.

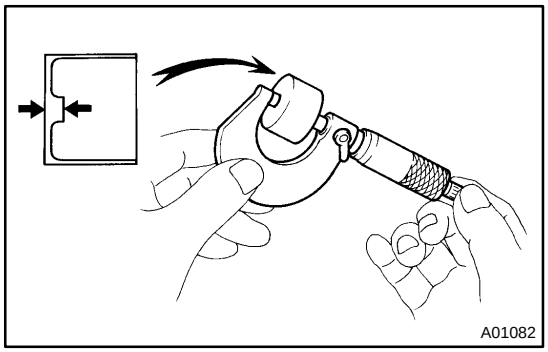

(h) Adjust the valve clearance.

(1) Using a micrometer, measure the thickness of the removed lifter.

(2) Calculate the thickness of a new lifter so that the valve clearance comes within the specified value.

A	Thickness of new lifter
B	Thickness of used lifter
C	Measured valve clearance

Valve clearance:

Item	Specified Condition
Intake	A = B + (C − 0.24 mm (0.0094 in.))
Exhaust	A = B + (C − 0.35 mm (0.0138 in.))

EXAMPLE: (Intake)
Measured valve clearance = 0.44 mm (0.0173 in.)
0.44 mm (0.0173 in.) − 0.24 mm (0.0094 in.) = 0.20 mm (0.0079 in.)
(Measured − Specification = Excess clearance)
Used shim measurement = 5.30 mm (0.2087 in.)
0.20 mm (0.0079 in.) + 5.30 mm (0.2087 in.) = 5.50 mm (0.2165 in.)
(Excess clearance + Used shim = Ideal new shim)
Closest new shim = 5.50 mm (0.2165 in.) = Shim No. ”50”

(3) Select a new lifter with a thickness as close as possible to the calculated values.

HINT:

- Lifters are available in 35 sizes in increments of 0.020 mm (0.0008 in.), from 5.060 mm (0.1992 in.) to 5.740 mm (0.2260 in.).
- Refer to valve lifter selection chart on the following 2 pages.

Valve Lifter Selection Chart (Intake)

Measure clearance mm (in.) \ Installed lifter thickness mm (in.)	5.060 (0.1992)	5.080 (0.2000)	5.100 (0.2008)	5.120 (0.2016)	5.140 (0.2024)	5.160 (0.2031)	5.180 (0.2039)	5.200 (0.2047)	5.210 (0.2051)	5.220 (0.2055)	5.230 (0.2059)	5.240 (0.2063)	5.250 (0.2067)	5.260 (0.2071)	5.270 (0.2075)	5.280 (0.2079)	5.290 (0.2083)	5.300 (0.2087)	5.310 (0.2091)	5.320 (0.2094)	5.330 (0.2098)	5.340 (0.2102)	5.350 (0.2106)	5.360 (0.2110)	5.370 (0.2114)	5.380 (0.2118)	5.390 (0.2122)	5.400 (0.2126)	5.410 (0.2130)	5.420 (0.2134)	5.430 (0.2138)	5.440 (0.2142)	5.450 (0.2146)	5.460 (0.2150)	5.470 (0.2154)	5.480 (0.2157)	5.490 (0.2161)	5.500 (0.2165)	5.510 (0.2169)	5.520 (0.2173)	5.530 (0.2177)	5.540 (0.2181)	5.550 (0.2185)	5.560 (0.2189)	5.570 (0.2193)	5.580 (0.2197)	5.590 (0.2201)	5.600 (0.2205)	5.620 (0.2213)	5.640 (0.2220)	5.660 (0.2228)	5.680 (0.2236)	5.700 (0.2244)	5.720 (0.2252)	5.740 (0.2260)
0.000−0.030 (0.0000−0.0012)													06	06	08	08	10	10	12	12	14	14	16	16	18	18	20	20	22	22	24	24	26	26	28	28	30	30	32	32	34	34	36	36	38	38	40	40	42	42	44	46	48	50	52	54
0.031−0.050 (0.0012−0.0020)									06	06	06	08	08	10	10	12	12	14	14	16	16	18	18	20	20	22	22	24	24	26	26	28	28	30	30	32	32	34	34	36	36	38	38	40	40	42	42	44	46	48	50	52	54	56	58
0.051−0.070 (0.0020−0.0028)								06	08	08	08	10	10	12	12	14	14	16	16	18	18	20	20	22	22	24	24	26	26	28	28	30	30	32	32	34	34	36	36	38	38	40	40	42	42	44	44	46	48	50	52	54	56	58	60
0.071−0.090 (0.0028−0.0035)							06	08	10	10	10	12	12	14	14	16	16	18	18	20	20	22	22	24	24	26	26	28	28	30	30	32	32	34	34	36	36	38	38	40	40	42	42	44	44	46	46	48	50	52	54	56	58	60	62
0.091−0.110 (0.0036−0.0043)						06	08	10	12	12	12	14	14	16	16	18	18	20	20	22	22	24	24	26	26	28	28	30	30	32	32	34	34	36	36	38	38	40	40	42	42	44	44	46	46	48	48	50	52	54	56	58	60	62	64
0.111−0.130 (0.0044−0.0051)					06	08	10	12	14	14	14	16	16	18	18	20	20	22	22	24	24	26	26	28	28	30	30	32	32	34	34	36	36	38	38	40	40	42	42	44	44	46	46	48	48	50	50	52	54	56	58	60	62	64	66
0.131−0.150 (0.0052−0.0059)				06	08	10	12	14	16	16	16	18	18	20	20	22	22	24	24	26	26	28	28	30	30	32	32	34	34	36	36	38	38	40	40	42	42	44	44	46	46	48	48	50	50	52	52	54	56	58	60	62	64	66	68
0.151−0.170 (0.0059−0.0067)			06	08	10	12	14	16	18	18	18	20	20	22	22	24	24	26	26	28	28	30	30	32	32	34	34	36	36	38	38	40	40	42	42	44	44	46	46	48	48	50	50	52	52	54	54	56	58	60	62	64	66	68	70
0.171−0.189 (0.0067−0.0074)		06	08	10	12	14	16	18	20	20	20	22	22	24	24	26	26	28	28	30	30	32	32	34	34	36	36	38	38	40	40	42	42	44	44	46	46	48	48	50	50	52	52	54	54	56	56	58	60	62	64	66	68	70	72
0.190−0.290 (0.0075−0.0114)																																																								
0.291−0.310 (0.0115−0.0122)	12	14	16	18	20	22	24	26	28	28	30	30	32	32	34	34	36	36	38	38	40	40	42	42	44	44	46	46	48	48	50	50	52	52	54	54	56	56	58	58	60	60	62	62	64	64	66	66	68	70	72	74	74	74
0.311−0.330 (0.0122−0.0130)	14	16	18	20	22	24	26	28	30	30	32	32	34	34	36	36	38	38	40	40	42	42	44	44	46	46	48	48	50	50	52	52	54	54	56	56	58	58	60	60	62	62	64	64	66	66	68	68	70	72	74	74	74	
0.331−0.350 (0.0130−0.0138)	16	18	20	22	24	26	28	30	32	32	34	34	36	36	38	38	40	40	42	42	44	44	46	46	48	48	50	50	52	52	54	54	56	56	58	58	60	60	62	62	64	64	66	66	68	68	70	70	72	74	74	74		
0.351−0.370 (0.0138−0.0146)	18	20	22	24	26	28	30	32	34	34	36	36	38	38	40	40	42	42	44	44	46	46	48	48	50	50	52	52	54	54	56	56	58	58	60	60	62	62	64	64	66	66	68	68	70	70	72	72	74	74	74			
0.371−0.390 (0.0146−0.0154)	20	22	24	26	28	30	32	34	36	36	38	38	40	40	42	42	44	44	46	46	48	48	50	50	52	52	54	54	56	56	58	58	60	60	62	62	64	64	66	66	68	68	70	70	72	72	74	74	74					
0.391−0.410 (0.0154−0.0161)	22	24	26	28	30	32	34	36	38	38	40	40	42	42	44	44	46	46	48	48	50	50	52	52	54	54	56	56	58	58	60	60	62	62	64	64	66	66	68	68	70	70	72	72	74	74	74							
0.411−0.430 (0.0162−0.0169)	24	26	28	30	32	34	36	38	40	40	42	42	44	44	46	46	48	48	50	50	52	52	54	54	56	56	58	58	60	60	62	62	64	64	66	66	68	68	70	70	72	72	74	74	74									
0.431−0.450 (0.0170−0.0177)	26	28	30	32	34	36	38	40	42	42	44	44	46	46	48	48	50	50	52	52	54	54	56	56	58	58	60	60	62	62	64	64	66	66	68	68	70	70	72	72	74	74	74											
0.451−0.470 (0.0178−0.0185)	28	30	32	34	36	38	40	42	44	44	46	46	48	48	50	50	52	52	54	54	56	56	58	58	60	60	62	62	64	64	66	66	68	68	70	70	72	72	74	74	74													
0.471−0.490 (0.0185−0.0193)	30	32	34	36	38	40	42	44	46	46	48	48	50	50	52	52	54	54	56	56	58	58	60	60	62	62	64	64	66	66	68	68	70	70	72	72	74	74	74															
0.491−0.510 (0.0193−0.0201)	32	34	36	38	40	42	44	46	48	48	50	50	52	52	54	54	56	56	58	58	60	60	62	62	64	64	66	66	68	68	70	70	72	72	74	74	74	74																
0.511−0.530 (0.0201−0.0209)	34	36	38	40	42	44	46	48	50	50	52	52	54	54	56	56	58	58	60	60	62	62	64	64	66	66	68	68	70	70	72	72	74	74	74	74																		
0.531−0.550 (0.0209−0.0217)	36	38	40	42	44	46	48	50	52	52	54	54	56	56	58	58	60	60	62	62	64	64	66	66	68	68	70	70	72	72	74	74	74	74																				
0.551−0.570 (0.0217−0.0224)	38	40	42	44	46	48	50	52	54	54	56	56	58	58	60	60	62	62	64	64	66	66	68	68	70	70	72	72	74	74	74	74																						
0.571−0.590 (0.0225−0.0232)	40	42	44	46	48	50	52	54	56	56	58	58	60	60	62	62	64	64	66	66	68	68	70	70	72	72	74	74	74	74																										
0.591−0.610 (0.0233−0.0240)	42	44	46	48	50	52	54	56	58	58	60	60	62	62	64	64	66	66	68	68	70	70	72	72	74	74	74	74																												
0.611−0.630 (0.0241−0.0248)	44	46	48	50	52	54	56	58	60	60	62	62	64	64	66	66	68	68	70	70	72	72	74	74	74	74																												
0.631−0.650 (0.0248−0.0256)	46	48	50	52	54	56	58	60	62	62	64	64	66	66	68	68	70	70	72	72	74	74	74	74																												
0.651−0.670 (0.0256−0.0264)	48	50	52	54	56	58	60	62	64	64	66	66	68	68	70	70	72	72	74	74	74	74																												
0.671−0.690 (0.0264−0.0272)	50	52	54	56	58	60	62	64	66	66	68	68	70	70	72	72	74	74	74	74																												
0.691−0.710 (0.0272−0.0280)	52	54	56	58	60	62	64	66	68	68	70	70	72	72	74	74	74	74																												
0.711−0.730 (0.0280−0.0287)	54	56	58	60	62	64	66	68	70	70	72	72	74	74	74	74																												
0.731−0.750 (0.0288−0.0295)	56	58	60	62	64	66	68	70	72	72	74	74	74	74																												
0.751−0.770 (0.0296−0.0303)	58	60	62	64	66	68	70	72	74	74	74	74																												
0.771−0.790 (0.0304−0.0311)	60	62	64	66	68	70	72	74	74	74																												
0.791−0.810 (0.0311−0.0319)	62	64	66	68	70	72	74																															
0.811−0.830 (0.0319−0.0327)	64	66	68	70	72	74																																
0.831−0.850 (0.0327−0.0335)	66	68	70	72	74																																	
0.851−0.870 (0.0335−0.0343)	68	70	72	74																																		
0.871−0.890 (0.0343−0.0350)	70	72	74																																			
0.891−0.910 (0.0351−0.0358)	72	74																																				
0.911−0.930 (0.0359−0.0366)	74																																					

Intake valve clearance (Cold):
0.19 to 0.29 mm (0.008 to 0.011 in.)

EXAMPLE:

The 5.250 mm (0.2067 in.) lifter is installed, and the measured clearance is 0.400 mm (0.0157 in.). Replace the 5.250 mm (0.2067 in.) lifter with a new No. 42 lifter.

New Lifter Thickness mm (in.)

Lifter No.	Thickness	Lifter No.	Thickness	Lifter No.	Thickness
06	5.060 (0.1992)	30	5.300 (0.2087)	54	5.540 (0.2181)
08	5.080 (0.2000)	32	5.320 (0.2094)	56	5.560 (0.2189)
10	5.100 (0.2008)	34	5.340 (0.2102)	58	5.580 (0.2197)
12	5.120 (0.2016)	36	5.360 (0.2110)	60	5.600 (0.2205)
14	5.140 (0.2024)	38	5.380 (0.2118)	62	5.620 (0.2213)
16	5.160 (0.2031)	40	5.400 (0.2126)	64	5.640 (0.2220)
18	5.180 (0.2039)	42	5.420 (0.2134)	66	5.660 (0.2228)
20	5.200 (0.2047)	44	5.440 (0.2142)	68	5.680 (0.2236)
22	5.220 (0.2055)	46	5.460 (0.2150)	70	5.700 (0.2244)
24	5.240 (0.2063)	48	5.480 (0.2157)	72	5.720 (0.2252)
26	5.260 (0.2071)	50	5.500 (0.2165)	74	5.740 (0.2260)
28	5.280 (0.2079)	52	5.520 (0.2173)		

A77296

Valve Lifter Selection Chart (Exhaust)

Measure clearance mm (in.) \ Installed lifter thickness mm (in.)	5.060 (0.1992)	5.080 (0.2000)	5.100 (0.2008)	5.120 (0.2016)	5.140 (0.2024)	5.160 (0.2031)	5.180 (0.2039)	5.200 (0.2047)	5.210 (0.2051)	5.220 (0.2055)	5.230 (0.2059)	5.240 (0.2063)	5.250 (0.2067)	5.260 (0.2071)	5.270 (0.2075)	5.280 (0.2079)	5.290 (0.2083)	5.300 (0.2087)	5.310 (0.2091)	5.320 (0.2094)	5.330 (0.2098)	5.340 (0.2102)	5.350 (0.2106)	5.360 (0.2110)	5.370 (0.2114)	5.380 (0.2118)	5.390 (0.2122)	5.400 (0.2126)	5.410 (0.2130)	5.420 (0.2134)	5.430 (0.2138)	5.440 (0.2142)	5.450 (0.2146)	5.460 (0.2150)	5.470 (0.2154)	5.480 (0.2157)	5.490 (0.2161)	5.500 (0.2165)	5.510 (0.2169)	5.520 (0.2173)	5.530 (0.2177)	5.540 (0.2181)	5.550 (0.2185)	5.560 (0.2189)	5.570 (0.2193)	5.580 (0.2197)	5.590 (0.2201)	5.600 (0.2205)	5.620 (0.2213)	5.640 (0.2220)	5.660 (0.2228)	5.680 (0.2236)	5.700 (0.2244)	5.720 (0.2252)	5.740 (0.2260)
0.000–0.030 (0.0000–0.0012)																							06	06	08	08	10	10	12	12	14	14	16	16	18	18	20	20	22	22	24	24	26	26	28	28	30	30	32	34	36	38	40	42	44
0.031–0.050 (0.0012–0.0020)																				06	06	08	08	10	10	12	12	14	14	16	16	18	18	20	20	22	22	24	24	26	26	28	28	30	30	32	32	34	36	38	40	42	44	46
0.051–0.070 (0.0020–0.0028)																			06	06	08	08	10	10	12	12	14	14	16	16	18	18	20	20	22	22	24	24	26	26	28	28	30	30	32	32	34	34	36	38	40	42	44	46	48
0.071–0.090 (0.0028–0.0035)																	06	06	08	08	10	10	12	12	14	14	16	16	18	18	20	20	22	22	24	24	26	26	28	28	30	30	32	32	34	34	36	38	40	42	44	46	48	50
0.091–0.110 (0.0036–0.0043)															06	06	08	08	10	10	12	12	14	14	16	16	18	18	20	20	22	22	24	24	26	26	28	28	30	30	32	32	34	34	36	36	38	38	40	42	44	46	48	50	52
0.111–0.130 (0.0044–0.0051)													06	06	08	08	10	10	12	12	14	14	16	16	18	18	20	20	22	22	24	24	26	26	28	28	30	30	32	32	34	34	36	36	38	38	40	40	42	44	46	48	50	52	54
0.131–0.150 (0.0052–0.0059)										06	06	08	08	10	10	12	12	14	14	16	16	18	18	20	20	22	22	24	24	26	26	28	28	30	30	32	32	34	34	36	36	38	38	40	40	42	42	44	46	48	50	52	54	56
0.151–0.170 (0.0059–0.0067)									06	06	08	08	10	10	12	12	14	14	16	16	18	18	20	20	22	22	24	24	26	26	28	28	30	30	32	32	34	34	36	36	38	38	40	40	42	42	44	44	46	48	50	52	54	56	58
0.171–0.190 (0.0067–0.0075)								06	08	08	10	10	12	12	14	14	16	16	18	18	20	20	22	22	24	24	26	26	28	28	30	30	32	32	34	34	36	36	38	38	40	40	42	42	44	44	46	46	48	50	52	54	56	58	60
0.191–0.210 (0.0075–0.0083)							06	08	10	10	12	12	14	14	16	16	18	18	20	20	22	22	24	24	26	26	28	28	30	30	32	32	34	34	36	36	38	38	40	40	42	42	44	44	46	46	48	48	50	52	54	56	58	60	62
0.211–0.230 (0.0083–0.0091)						06	08	10	12	12	14	14	16	16	18	18	20	20	22	22	24	24	26	26	28	28	30	30	32	32	34	34	36	36	38	38	40	40	42	42	44	44	46	46	48	48	50	50	52	54	56	58	60	62	64
0.231–0.250 (0.0091–0.0098)					06	08	10	12	14	14	16	16	18	18	20	20	22	22	24	24	26	26	28	28	30	30	32	32	34	34	36	36	38	38	40	40	42	42	44	44	46	46	48	48	50	50	52	52	54	56	58	60	62	64	66
0.251–0.270 (0.0099–0.0106)				06	08	10	12	14	16	16	18	18	20	20	22	22	24	24	26	26	28	28	30	30	32	32	34	34	36	36	38	38	40	40	42	42	44	44	46	46	48	48	50	50	52	52	54	54	56	58	60	62	64	66	68
0.271–0.290 (0.0107–0.0114)			06	08	10	12	14	16	18	18	20	20	22	22	24	24	26	26	28	28	30	30	32	32	34	34	36	36	38	38	40	40	42	42	44	44	46	46	48	48	50	50	52	52	54	54	56	56	58	60	62	64	66	68	70
0.291–0.299 (0.0115–0.0118)		06	08	10	12	14	16	18	20	20	22	22	24	24	26	26	28	28	30	30	32	32	34	34	36	36	38	38	40	40	42	42	44	44	46	46	48	48	50	50	52	52	54	54	56	56	58	58	60	62	64	66	68	70	72
0.300–0.400 (0.0118–0.0157)																																																								
0.401–0.420 (0.0158–0.0165)	12	14	16	18	20	22	24	26	26	28	28	30	30	32	32	34	34	36	36	38	38	40	40	42	42	44	44	46	46	48	48	50	50	52	52	54	54	56	56	58	58	60	60	62	62	64	64	66	68	70	72	74	74	74
0.421–0.440 (0.0166–0.0173)	14	16	18	20	22	24	26	28	28	30	30	32	32	34	34	36	36	38	38	40	40	42	42	44	44	46	46	48	48	50	50	52	52	54	54	56	56	58	58	60	60	62	62	64	64	66	66	68	70	72	74	74	74
0.441–0.460 (0.0174–0.0181)	16	18	20	22	24	26	28	30	30	32	32	34	34	36	36	38	38	40	40	42	42	44	44	46	46	48	48	50	50	52	52	54	54	56	56	58	58	60	60	62	62	64	64	66	66	68	68	70	72	74	74	74		
0.461–0.480 (0.0181–0.0189)	18	20	22	24	26	28	30	32	32	34	34	36	36	38	38	40	40	42	42	44	44	46	46	48	48	50	50	52	52	54	54	56	56	58	58	60	60	62	62	64	64	66	66	68	68	70	70	72	74	74	74			
0.481–0.500 (0.0189–0.0197)	20	22	24	26	28	30	32	34	34	36	36	38	38	40	40	42	42	44	44	46	46	48	48	50	50	52	52	54	54	56	56	58	58	60	60	62	62	64	64	66	66	68	68	70	70	72	72	74	74	74				
0.501–0.520 (0.0197–0.0205)	22	24	26	28	30	32	34	36	36	38	38	40	40	42	42	44	44	46	46	48	48	50	50	52	52	54	54	56	56	58	58	60	60	62	62	64	64	66	66	68	68	70	70	72	72	74	74	74	74					
0.521–0.540 (0.0205–0.0213)	24	26	28	30	32	34	36	38	38	40	40	42	42	44	44	46	46	48	48	50	50	52	52	54	54	56	56	58	58	60	60	62	62	64	64	66	66	68	68	70	70	72	72	74	74	76	76	74						
0.541–0.560 (0.0213–0.0220)	26	28	30	32	34	36	38	40	40	42	42	44	44	46	46	48	48	50	50	52	52	54	54	56	56	58	58	60	60	62	62	64	64	66	66	68	68	70	70	72	72	74	74	74	74	74	74							
0.561–0.580 (0.0221–0.0228)	28	30	32	34	36	38	40	42	42	44	44	46	46	48	48	50	50	52	52	54	54	56	56	58	58	60	60	62	62	64	64	66	66	68	68	70	70	72	72	74	74	74	74	74	74	74								
0.581–0.600 (0.0229–0.0236)	30	32	34	36	38	40	42	44	44	46	46	48	48	50	50	52	52	54	54	56	56	58	58	60	60	62	62	64	64	66	66	68	68	70	70	72	72	74	74	74	74	74	74	74										
0.601–0.620 (0.0237–0.0244)	32	34	36	38	40	42	44	46	46	48	48	50	50	52	52	54	54	56	56	58	58	60	60	62	62	64	64	66	66	68	68	70	70	72	72	74	74	74	74	74	74													
0.621–0.640 (0.0244–0.0252)	34	36	38	40	42	44	46	48	48	50	50	52	52	54	54	56	56	58	58	60	60	62	62	64	64	66	66	68	68	70	70	72	72	74	74	74	74	74	74															
0.641–0.660 (0.0252–0.0260)	36	38	40	42	44	46	48	50	50	52	52	54	54	56	56	58	58	60	60	62	62	64	64	66	66	68	68	70	70	72	72	74	74	74	74	74	74																	
0.661–0.680 (0.0260–0.0268)	38	40	42	44	46	48	50	52	52	54	54	56	56	58	58	60	60	62	62	64	64	66	66	68	68	70	70	72	72	74	74	74	74	74	74																			
0.681–0.700 (0.0268–0.0276)	40	42	44	46	48	50	52	54	54	56	56	58	58	60	60	62	62	64	64	66	66	68	68	70	70	72	72	74	74	74	74	74	74																				
0.701–0.720 (0.0276–0.0283)	42	44	46	48	50	52	54	56	56	58	58	60	60	62	62	64	64	66	66	68	68	70	70	72	72	74	74	74	74	74	74																								
0.721–0.740 (0.0284–0.0291)	44	46	48	50	52	54	56	58	58	60	60	62	62	64	64	66	66	68	68	70	70	72	72	74	74	74	74	74	74																									
0.741–0.760 (0.0292–0.0299)	46	48	50	52	54	56	58	60	60	62	62	64	64	66	66	68	68	70	70	72	72	74	74	74	74	74	74																										
0.761–0.780 (0.0300–0.0307)	48	50	52	54	56	58	60	62	62	64	64	66	66	68	68	70	70	72	72	74	74	74	74	74	74																										
0.781–0.800 (0.0307–0.0315)	50	52	54	56	58	60	62	64	64	66	66	68	68	70	70	72	72	74	74	74	74	74	74																										
0.801–0.820 (0.0315–0.0323)	52	54	56	58	60	62	64	66	66	68	68	70	70	72	72	74	74	74	74	74	74																										
0.821–0.840 (0.0323–0.0331)	54	56	58	60	62	64	66	68	68	70	70	72	72	74	74	74	74	74	74																										
0.841–0.860 (0.0331–0.0339)	56	58	60	62	64	66	68	70	70	72	72	74	74	74	74	74	74																										
0.861–0.880 (0.0339–0.0346)	58	60	62	64	66	68	70	72	72	74	74	74	74	74	74																										
0.881–0.900 (0.0347–0.0354)	60	62	64	66	68	70	72	74	74	74	74	74	74																										
0.901–0.920 (0.0355–0.0362)	62	64	66	68	70	72	74	74	74	74	74																										
0.921–0.940 (0.0363–0.0370)	64	66	68	70	72	74	74	74	74																												
0.941–0.960 (0.0370–0.0378)	66	68	70	72	74	74	74																														
0.961–0.980 (0.0378–0.0386)	68	70	72	74	74	74																															
0.981–1.000 (0.0386–0.0394)	70	72	74	74	74																																
1.001–1.020 (0.0394–0.0402)	72	74	74	74																																	
1.021–1.040 (0.0402–0.0409)	74	74	74																																		
1.041–1.060 (0.0410–0.0417)	74	74																																			
1.061–1.080 (0.0418–0.0425)	74																																				

Exhaust valve clearance (Cold):
0.30 to 0.40 mm (0.012 to 0.016 in.)

EXAMPLE:

The 5.340 mm (0.2102 in.) lifter is installed, and the measured clearance is 0.440 mm (0.0173 in.). Replace the 5.340 mm (0.2102 in.) lifter with a new No. 44 lifter.

New lifter thickness mm (in.)

Lifter No.	Thickness	Lifter No.	Thickness	Lifter No.	Thickness
06	5.060 (0.1992)	30	5.300 (0.2087)	54	5.540 (0.2181)
08	5.080 (0.2000)	32	5.320 (0.2094)	56	5.560 (0.2189)
10	5.100 (0.2008)	34	5.340 (0.2102)	58	5.580 (0.2197)
12	5.120 (0.2016)	36	5.360 (0.2110)	60	5.600 (0.2205)
14	5.140 (0.2024)	38	5.380 (0.2118)	62	5.620 (0.2213)
16	5.160 (0.2031)	40	5.400 (0.2126)	64	5.640 (0.2220)
18	5.180 (0.2039)	42	5.420 (0.2134)	66	5.660 (0.2228)
20	5.200 (0.2047)	44	5.440 (0.2142)	68	5.680 (0.2236)
22	5.220 (0.2055)	46	5.460 (0.2150)	70	5.700 (0.2244)
24	5.240 (0.2063)	48	5.480 (0.2157)	72	5.720 (0.2252)
26	5.260 (0.2071)	50	5.500 (0.2165)	74	5.740 (0.2260)
28	5.280 (0.2079)	52	5.520 (0.2173)		

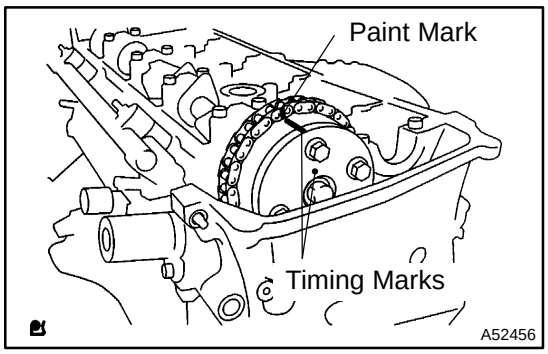

(i) Install the camshaft.

(1) Install the timing chain on the camshaft timing gear, with the paint mark aligned with the timing marks on the camshaft timing gear.

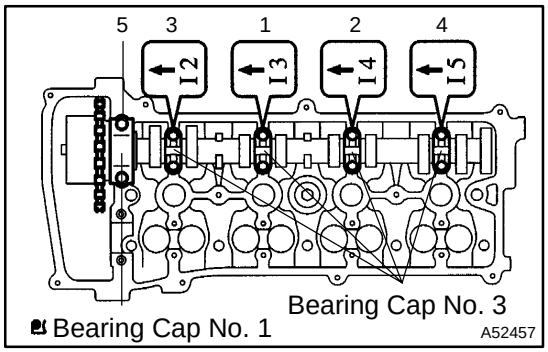

(2) Examine the front marks and numbers of the 5 bearing caps and install them. Then install the 10 bearing cap bolts. Uniformly tighten the bolts in the sequence shown in the illustration.

Torque:
30 N·m (301 kgf·cm, 22 ft·lbf) for bearing cap No. 1
9.0 N·m (92 kgf·cm, 80 in.·lbf) for bearing cap No. 3

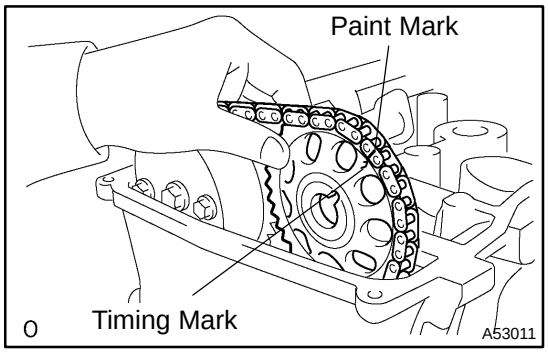

(j) Install the No. 2 camshaft.

(1) Put the No. 2 camshaft on the cylinder head with the paint mark of the chain aligned with the timing mark on the camshaft timing sprocket.

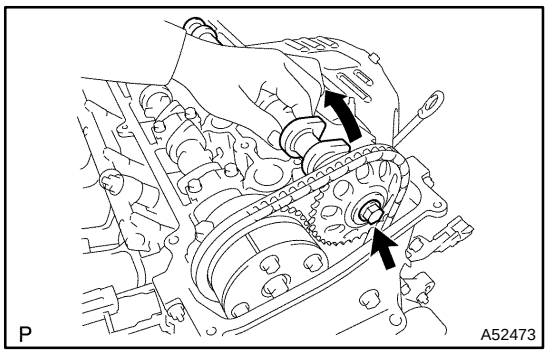

(2) Raise the No. 2 camshaft and temporarily tighten the sprocket bolt.

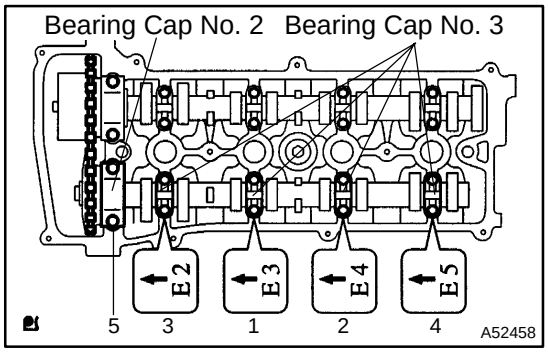

(3) Examine the front marks and numbers of the 5 bearing caps and install them. Then install the 10 bearing cap bolts. Uniformly tighten the bolts in the sequence shown in the illustration.

Torque:
30 N·m (301 kgf·cm, 22 ft·lbf) for bearing cap No. 2
9.0 N·m (92 kgf·cm, 80 in.·lbf) for bearing cap No. 3

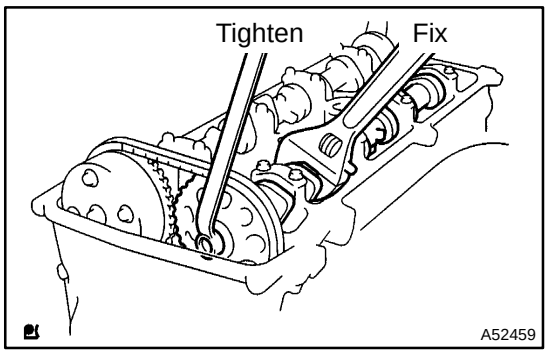

(4) Fix the camshaft with a wrench, then tighten the sprocket bolt.

Torque: 54 N·m (551 kgf·cm, 40 ft·lbf)

NOTICE:

Be careful not to damage the valve lifter.

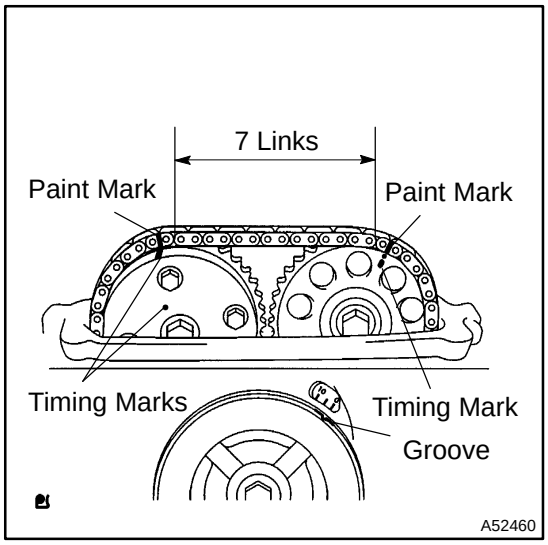

(k) Check that the timing chain paint marks are aligned with the camshaft timing sprocket timing mark and the camshaft timing gear timing mark. Also check the alignment of the pulley groove and chain cover timing mark 0.

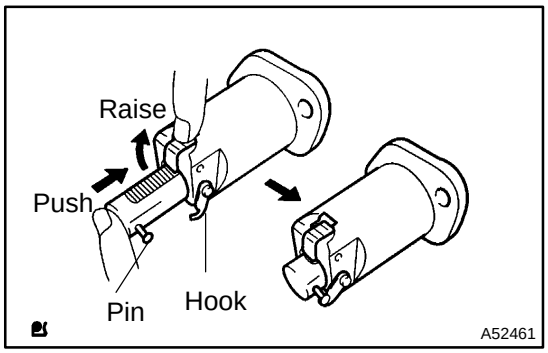

(l) Install the chain tensioner.

(1) Raise the ratchet pawl, fully push in the plunger and apply the hook to the pin so that the plunger cannot spring out.

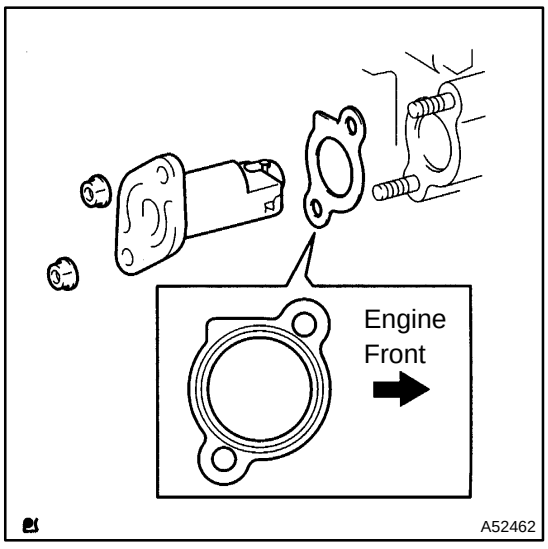

(2) Install a new gasket and the chain tensioner with the 2 nuts.

Torque: 9.0 N·m (92 kgf·cm, 80 in.·lbf)

NOTICE:

When installing the tensioner, set the hook again if the hook releases the plunger.

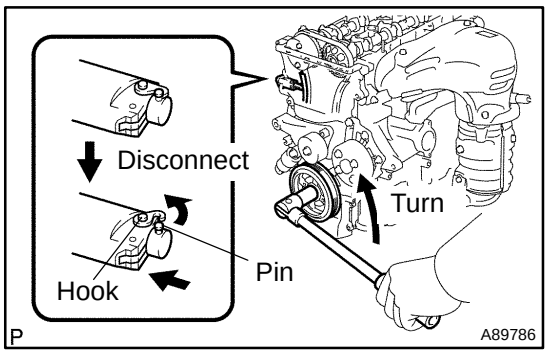

(3) Turn the crankshaft counterclockwise, and disconnect the plunger knock pin from the hook.

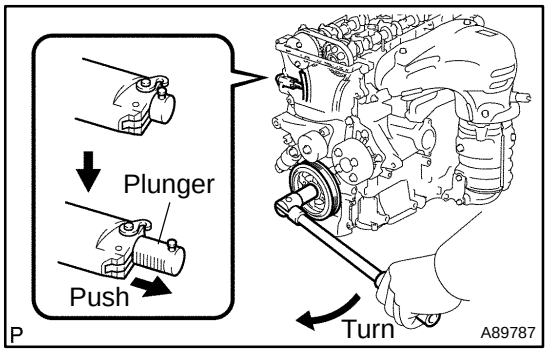

(4) Turn the crankshaft clockwise, and check that the chain tensioner slipper is pushed by the plunger.

12. INSTALL CYLINDER HEAD COVER SUB−ASSY

(a) Remove any old packing (FIPG) material.

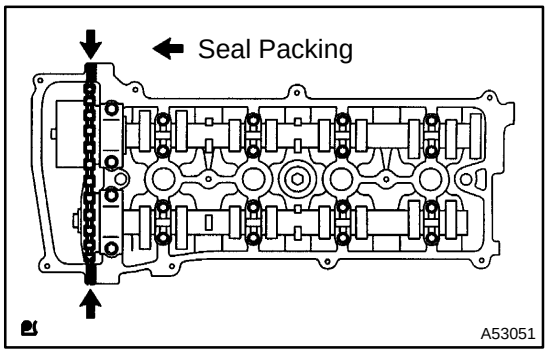

(b) Apply seal packing to the 2 locations shown in the illustration.

Seal packing: Part No. 08826−00080 or equivalent

NOTICE:

- **Remove any oil from the contact surface.**
- **Install the cylinder head cover within 5 minutes after applying seal packing.**
- **Do not start the engine for at least 2 hours after installing the cylinder head cover.**

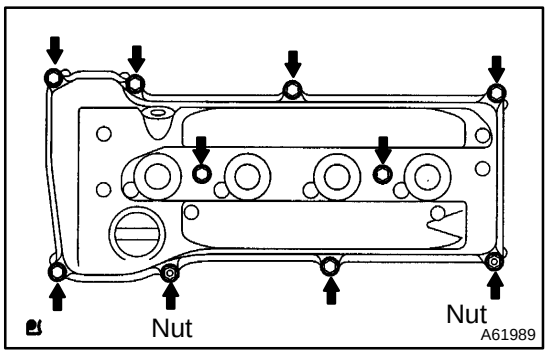

(c) Install the cylinder head cover with the 8 bolts and 2 nuts.

Torque: 11 N·m (110 kgf·cm, 8 ft·lbf)

13. INSTALL SPARK PLUG

Torque: 19 N·m (194 kgf·cm, 14 in.·lbf)

14. INSTALL FRONT WHEEL RH

15. INSPECT OIL LEAK

PARTIAL ENGINE ASSY (2AZ−FE)(From July, 2003)

14118−02

COMPONENTS

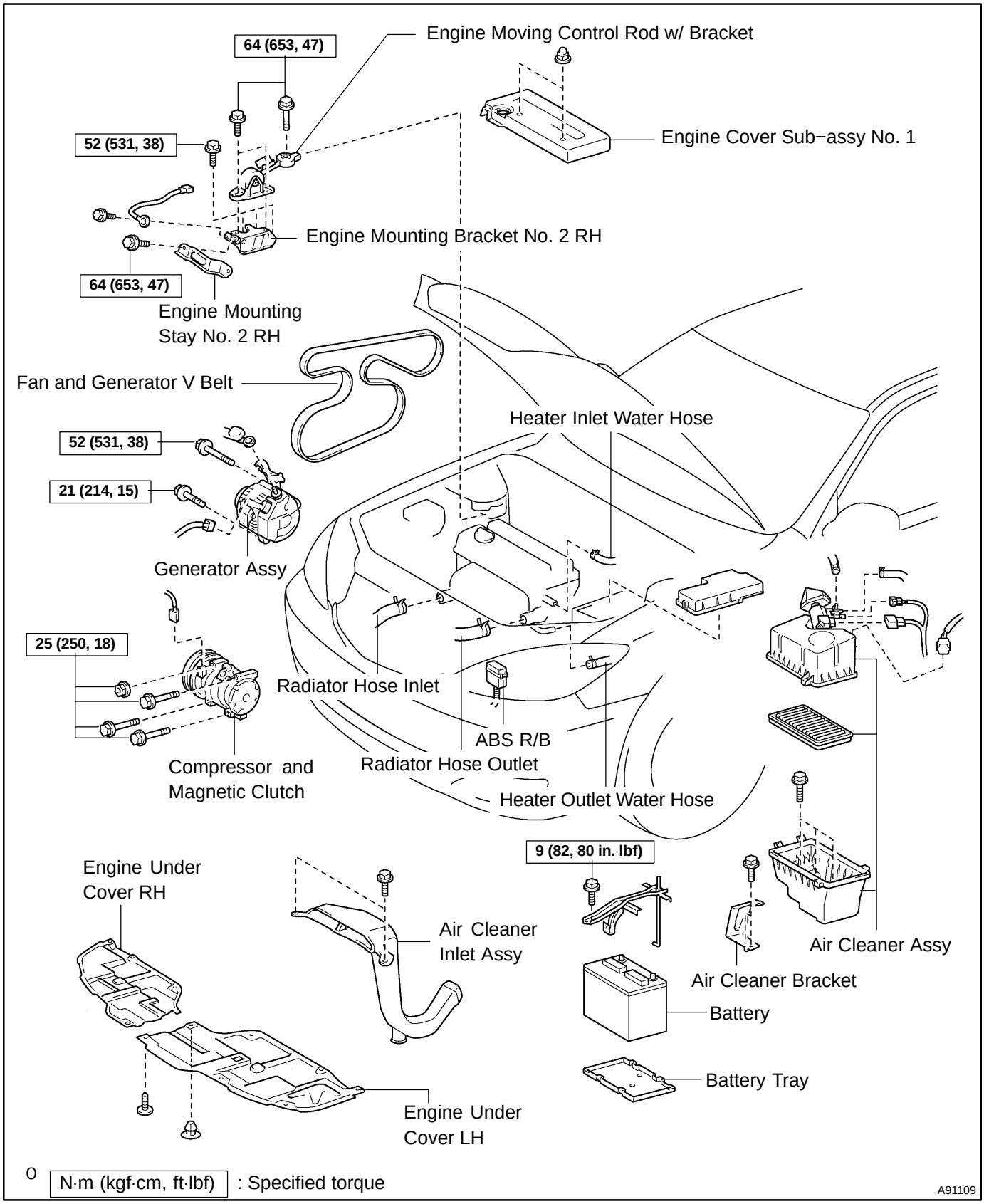

o N·m (kgf·cm, ft·lbf) : Specified torque

A91109

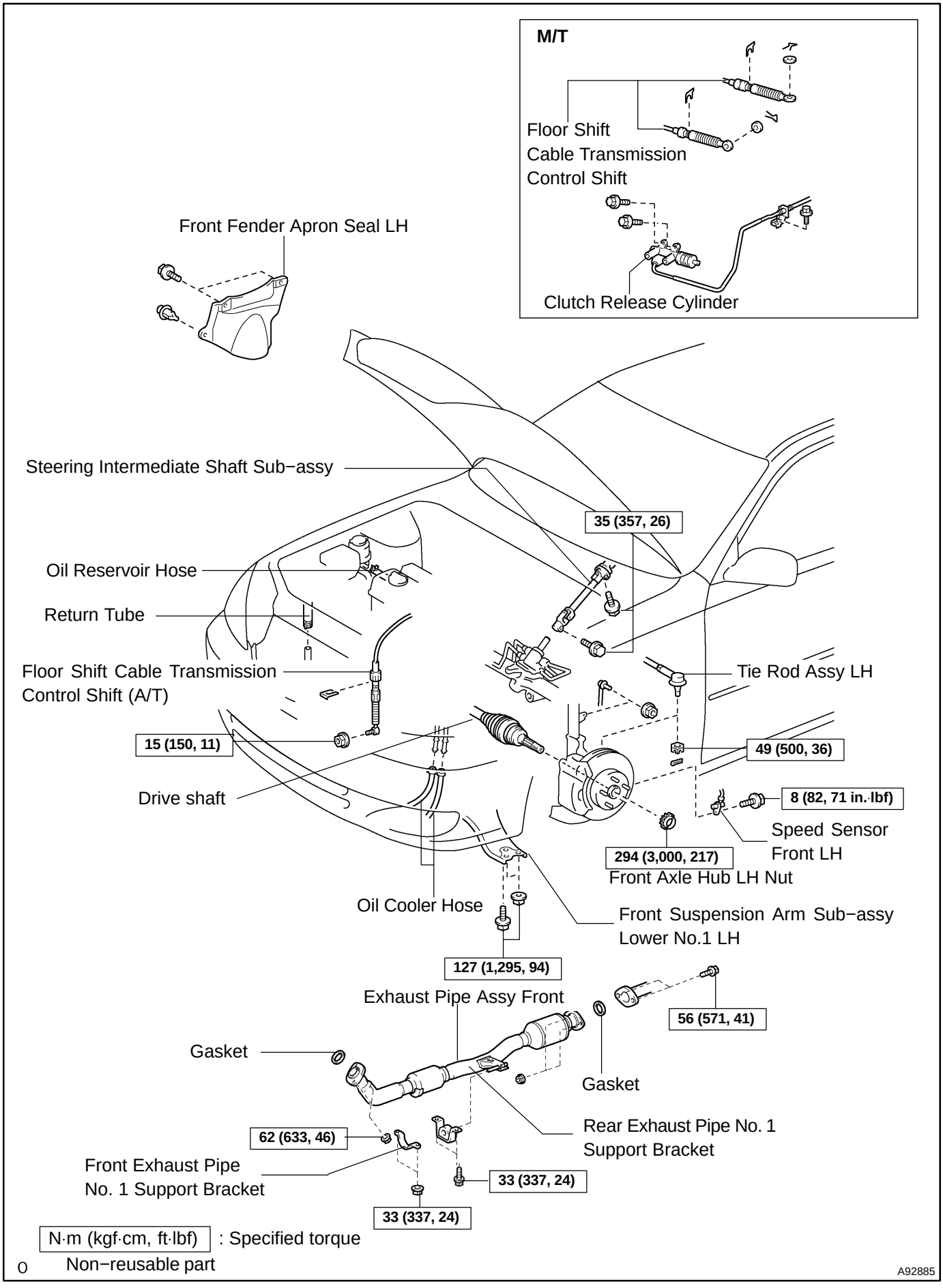
M/T
Floor Shift
Cable Transmission
Control Shift
Clutch Release Cylinder
Front Fender Apron Seal LH
Steering Intermediate Shaft Sub−assy
35 (357, 26)
Oil Reservoir Hose
Return Tube
Floor Shift Cable Transmission
Control Shift (A/T)
Tie Rod Assy LH
15 (150, 11)
49 (500, 36)
Drive shaft
8 (82, 71 in.·lbf)
Speed Sensor
Front LH
294 (3,000, 217)
Front Axle Hub LH Nut
Oil Cooler Hose
Front Suspension Arm Sub−assy
Lower No.1 LH
127 (1,295, 94)
Exhaust Pipe Assy Front
56 (571, 41)
Gasket
Gasket
Rear Exhaust Pipe No. 1
Support Bracket
62 (633, 46)
Front Exhaust Pipe
No. 1 Support Bracket
33 (337, 24)
33 (337, 24)
N·m (kgf·cm, ft·lbf) : Specified torque
Non−reusable part
A92885

A/T

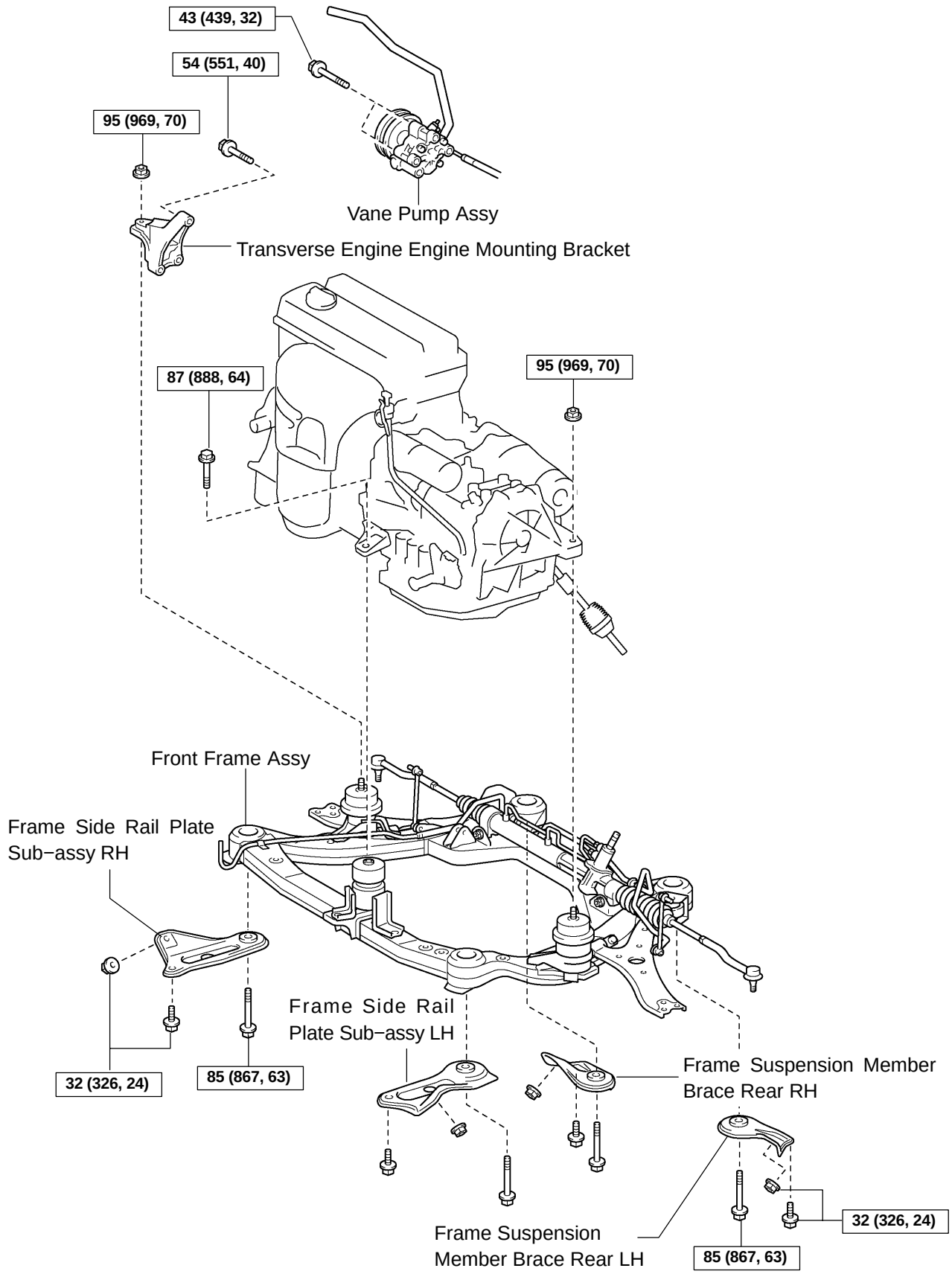

O N·m (kgf·cm, ft·lbf) : Specified torque

A60070

M/T

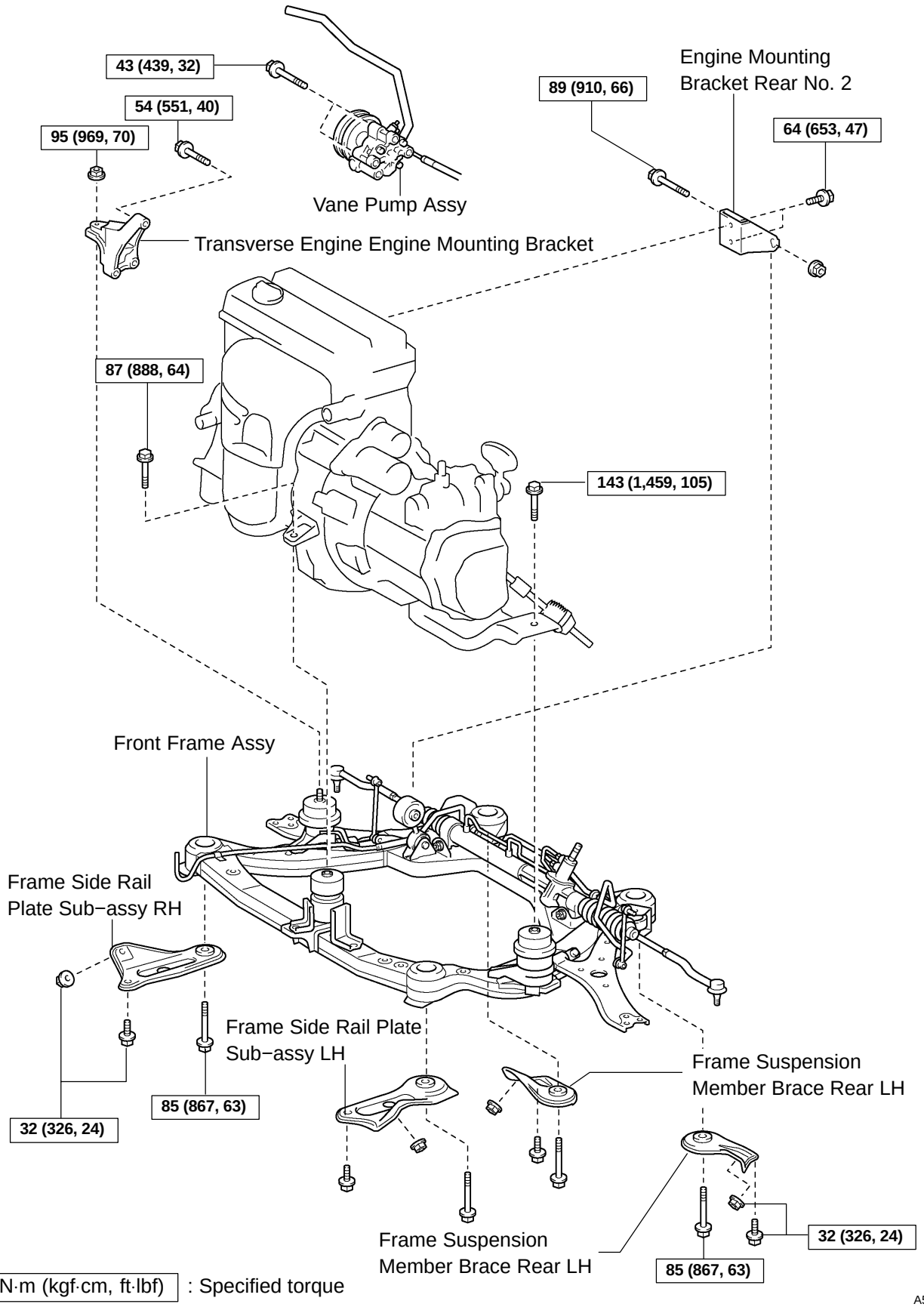

N·m (kgf·cm, ft·lbf) : Specified torque

A59886

A/T

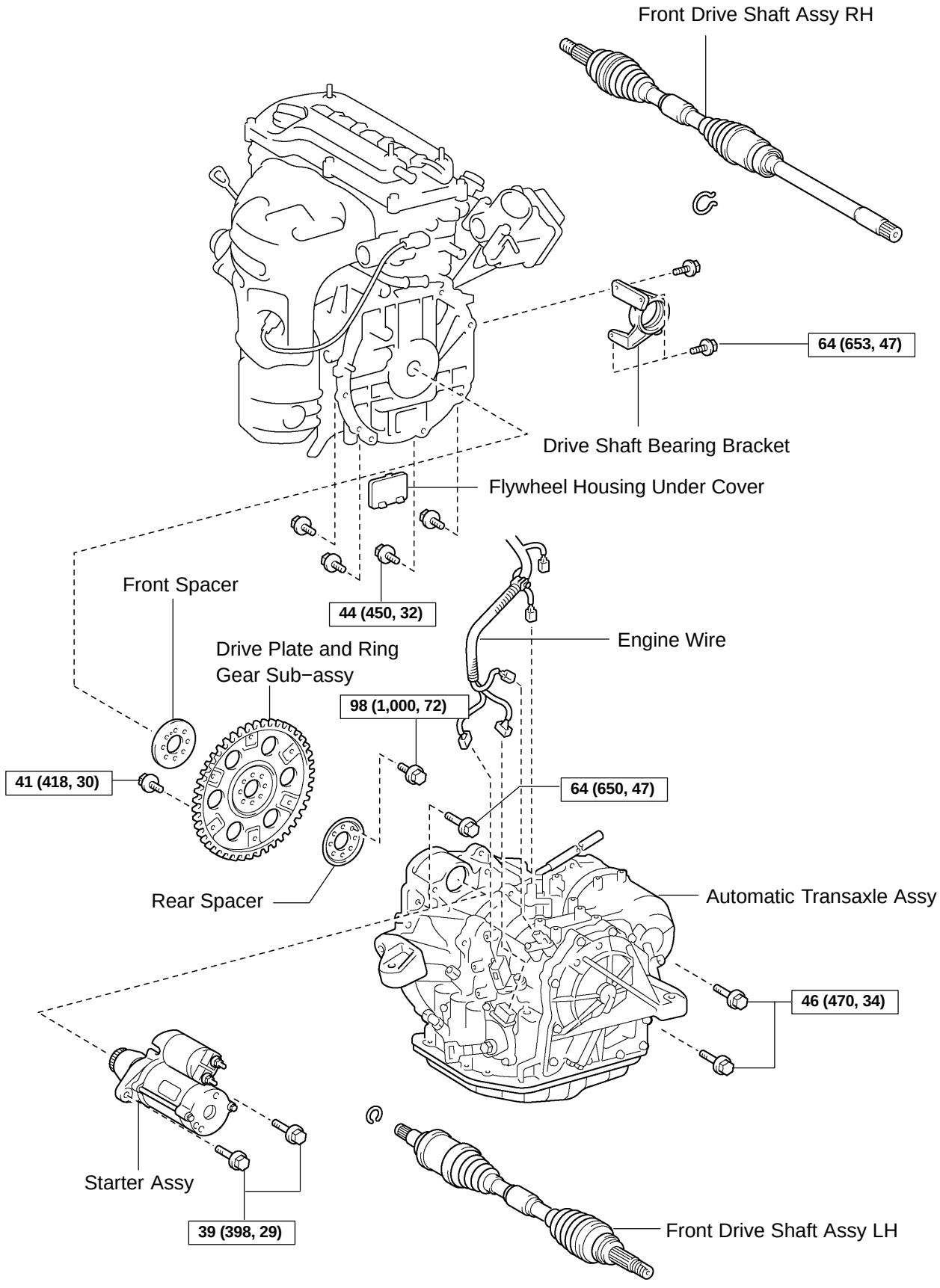

o N·m (kgf·cm, ft·lbf) : Specified torque

A60075

M/T

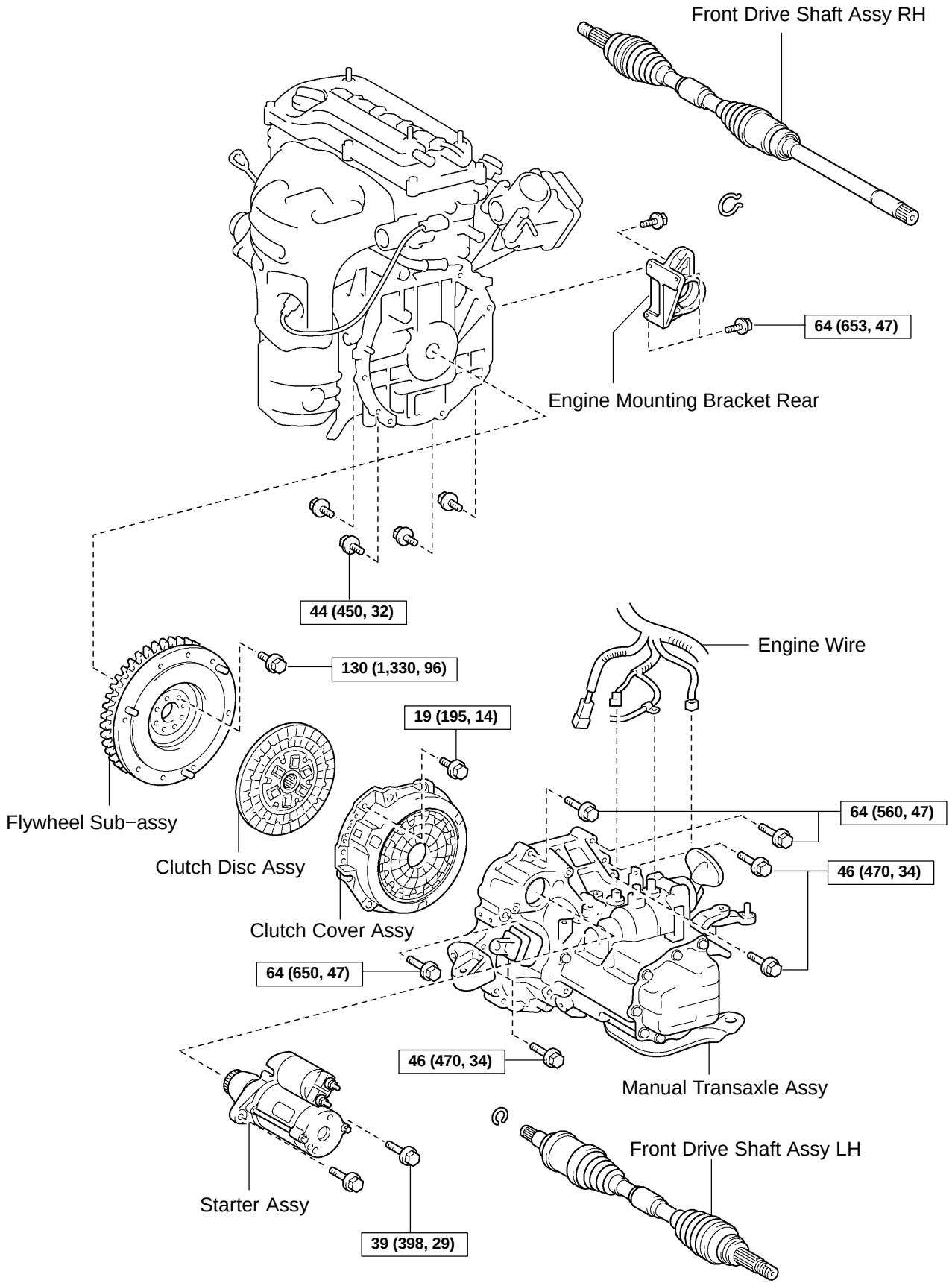

o N·m (kgf·cm, ft·lbf) : Specified torque

A60074

PZEV

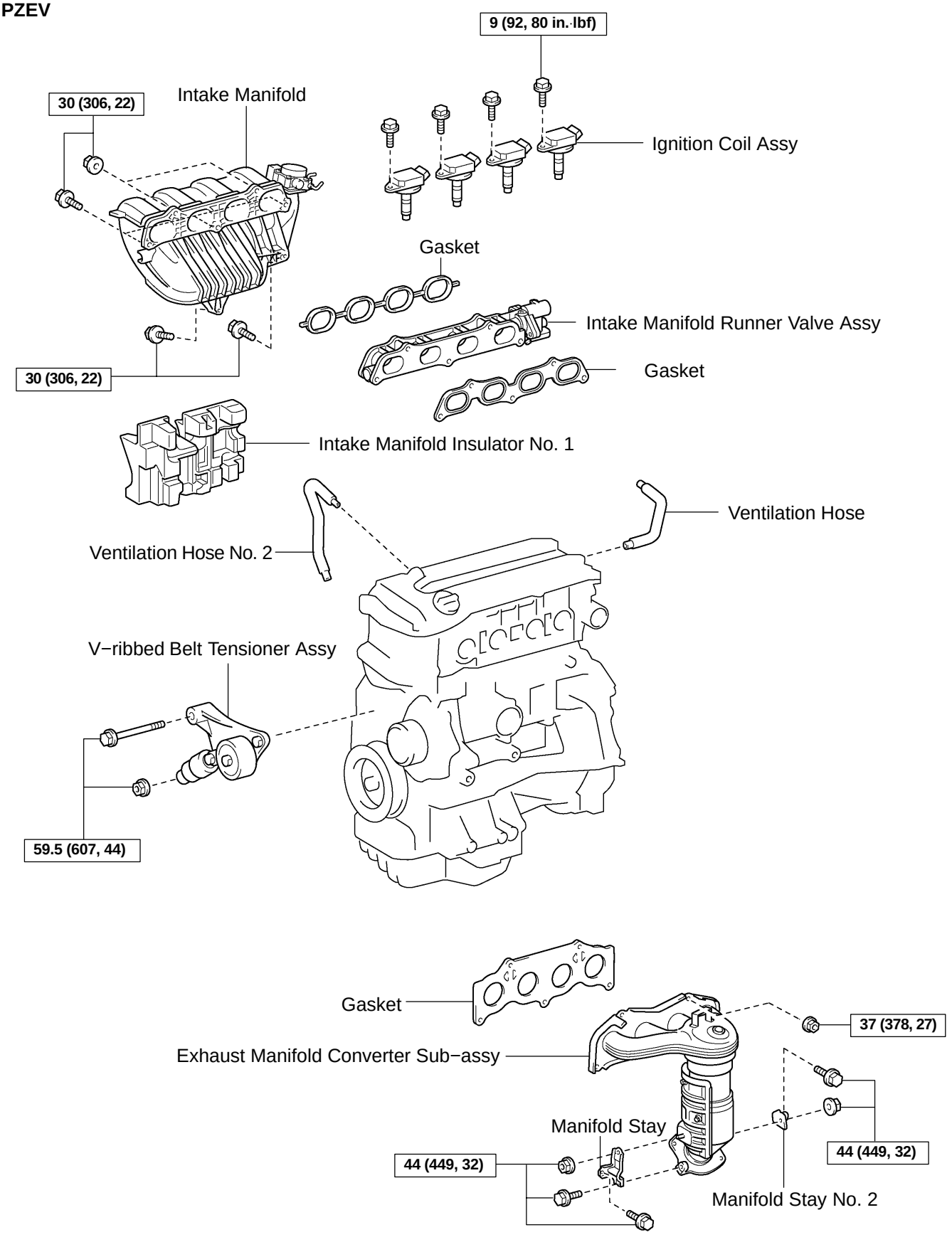

N·m (kgf·cm, ft·lbf) : Specified torque

O Non−reusable part

A77375

Except PZEV

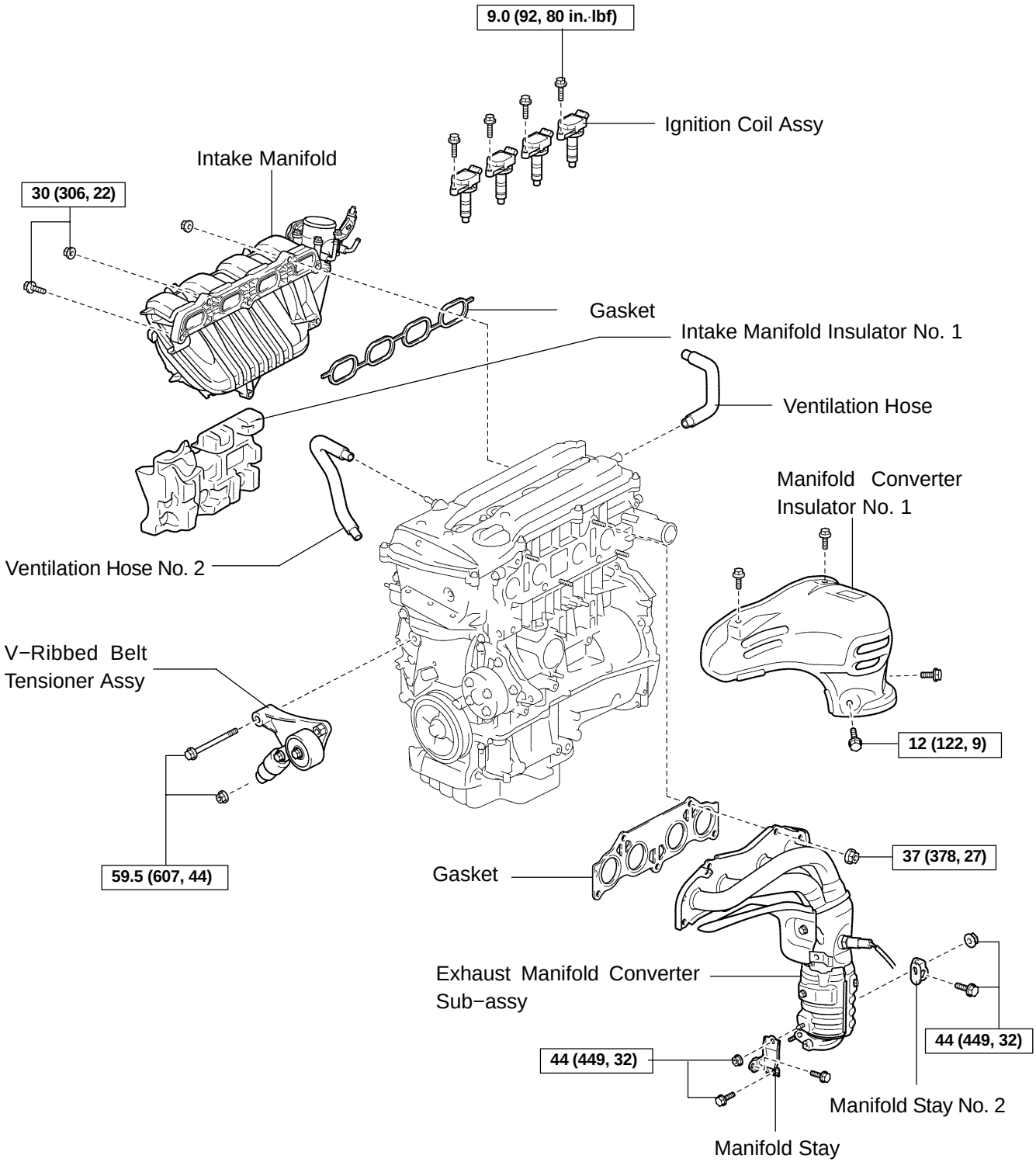

A89789

P

N·m (kgf·cm, ft·lbf) : Specified torque

Non−reusable part

A92012

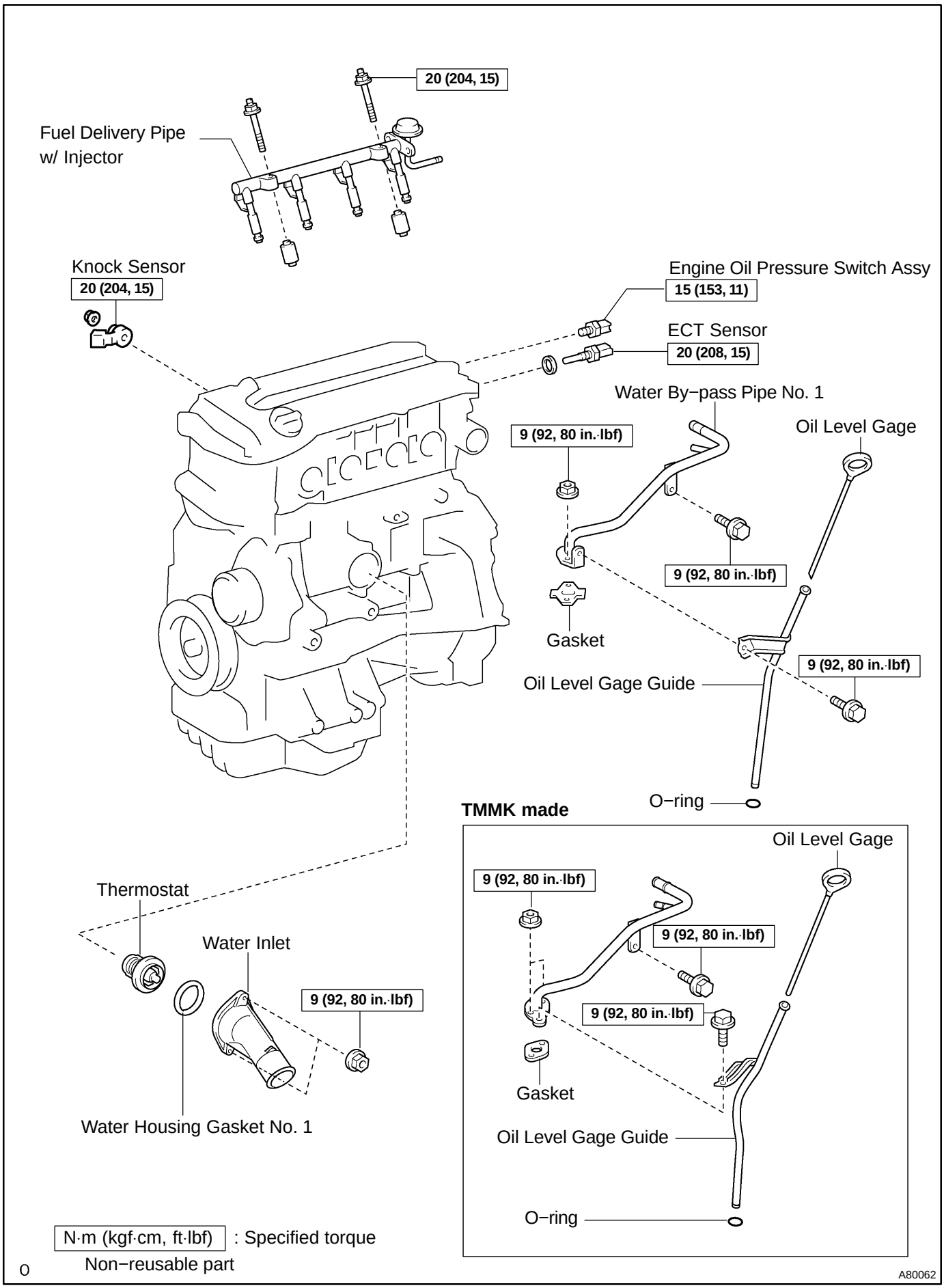
20 (204, 15)
Fuel Delivery Pipe
w/ Injector
Knock Sensor
20 (204, 15)
Engine Oil Pressure Switch Assy
15 (153, 11)
ECT Sensor
20 (208, 15)
Water By−pass Pipe No. 1
Oil Level Gage
9 (92, 80 in.·lbf)
9 (92, 80 in.·lbf)
Gasket
9 (92, 80 in.·lbf)
Oil Level Gage Guide
O−ring
TMMK made
Oil Level Gage
9 (92, 80 in.·lbf)
9 (92, 80 in.·lbf)
9 (92, 80 in.·lbf)
Gasket
Oil Level Gage Guide
O−ring
Thermostat
Water Inlet
9 (92, 80 in.·lbf)
Water Housing Gasket No. 1
N·m (kgf·cm, ft·lbf) : Specified torque
Non−reusable part
A80062

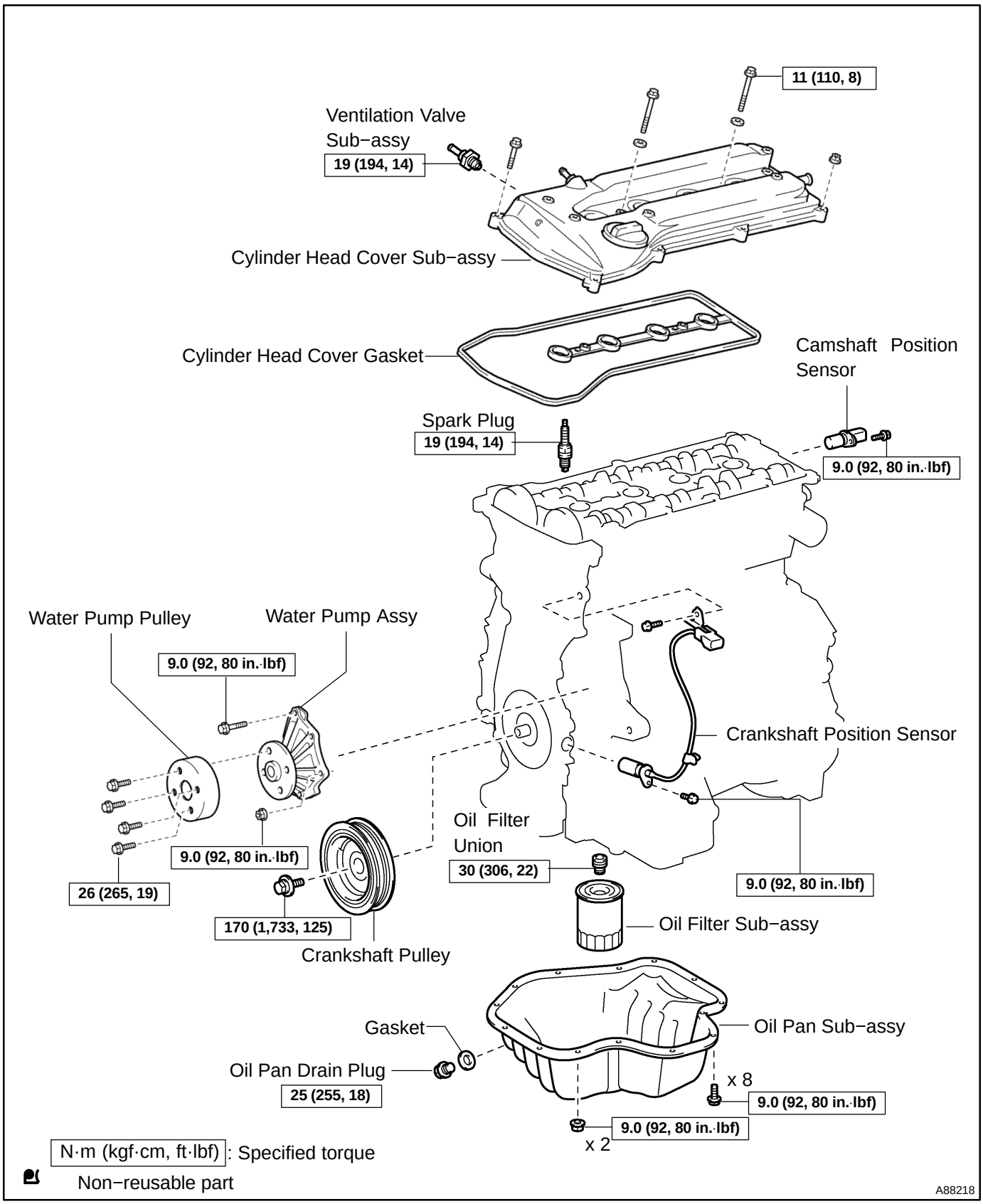
11 (110, 8)
Ventilation Valve Sub−assy
19 (194, 14)
Cylinder Head Cover Sub−assy
Cylinder Head Cover Gasket
Camshaft Position Sensor
Spark Plug
19 (194, 14)
9.0 (92, 80 in.·lbf)
Water Pump Pulley
Water Pump Assy
9.0 (92, 80 in.·lbf)
Crankshaft Position Sensor
Oil Filter Union
30 (306, 22)
9.0 (92, 80 in.·lbf)
9.0 (92, 80 in.·lbf)
26 (265, 19)
170 (1,733, 125)
Crankshaft Pulley
Oil Filter Sub−assy
Gasket
Oil Pan Sub−assy
Oil Pan Drain Plug
25 (255, 18)
x 8
9.0 (92, 80 in.·lbf)
9.0 (92, 80 in.·lbf)
x 2
N·m (kgf·cm, ft·lbf): Specified torque
Non−reusable part
A88218

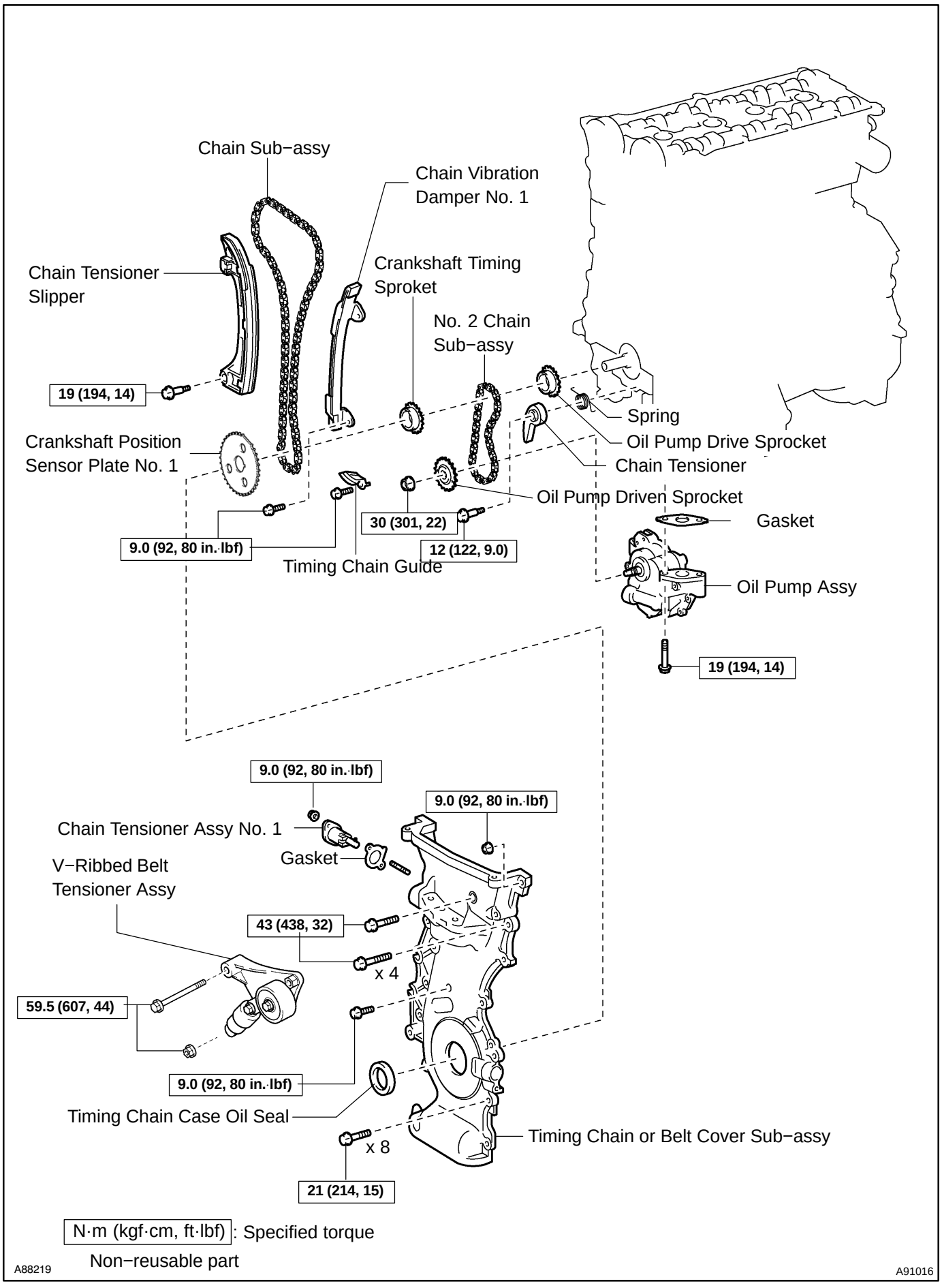
Chain Sub−assy
Chain Vibration Damper No. 1
Chain Tensioner Slipper
Crankshaft Timing Sproket
No. 2 Chain Sub−assy
19 (194, 14)
Spring
Oil Pump Drive Sprocket
Crankshaft Position Sensor Plate No. 1
Chain Tensioner
Oil Pump Driven Sprocket
30 (301, 22)
Gasket
9.0 (92, 80 in.·lbf)
12 (122, 9.0)
Timing Chain Guide
Oil Pump Assy
19 (194, 14)
9.0 (92, 80 in.·lbf)
9.0 (92, 80 in.·lbf)
Chain Tensioner Assy No. 1
Gasket
V−Ribbed Belt Tensioner Assy
43 (438, 32)
x 4
59.5 (607, 44)
9.0 (92, 80 in.·lbf)
Timing Chain Case Oil Seal
Timing Chain or Belt Cover Sub−assy
x 8
21 (214, 15)
N·m (kgf·cm, ft·lbf): Specified torque
Non−reusable part
A88219
A91016

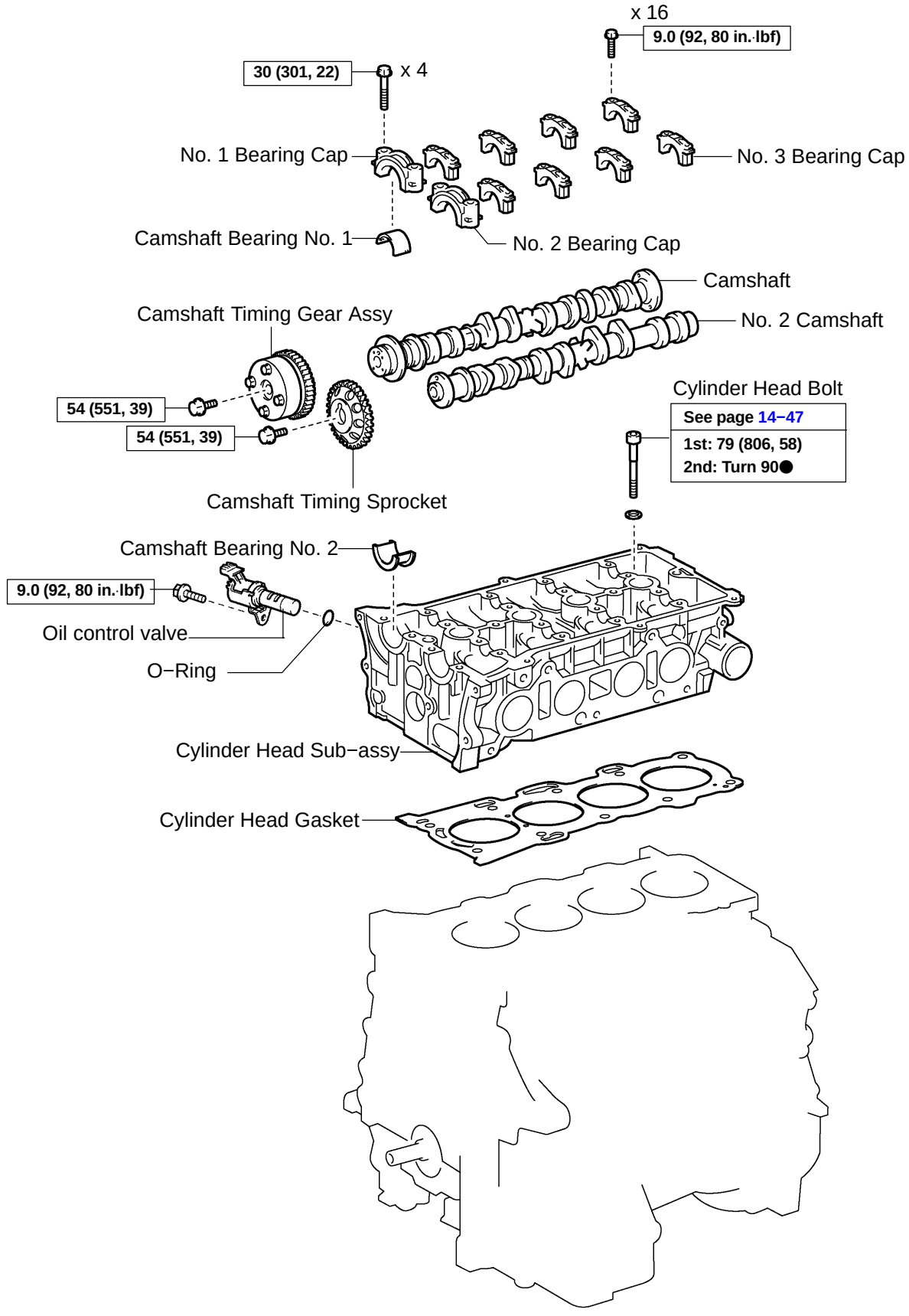

N·m (kgf·cm, ft·lbf): Specified torque

Non−reusable part

A92010

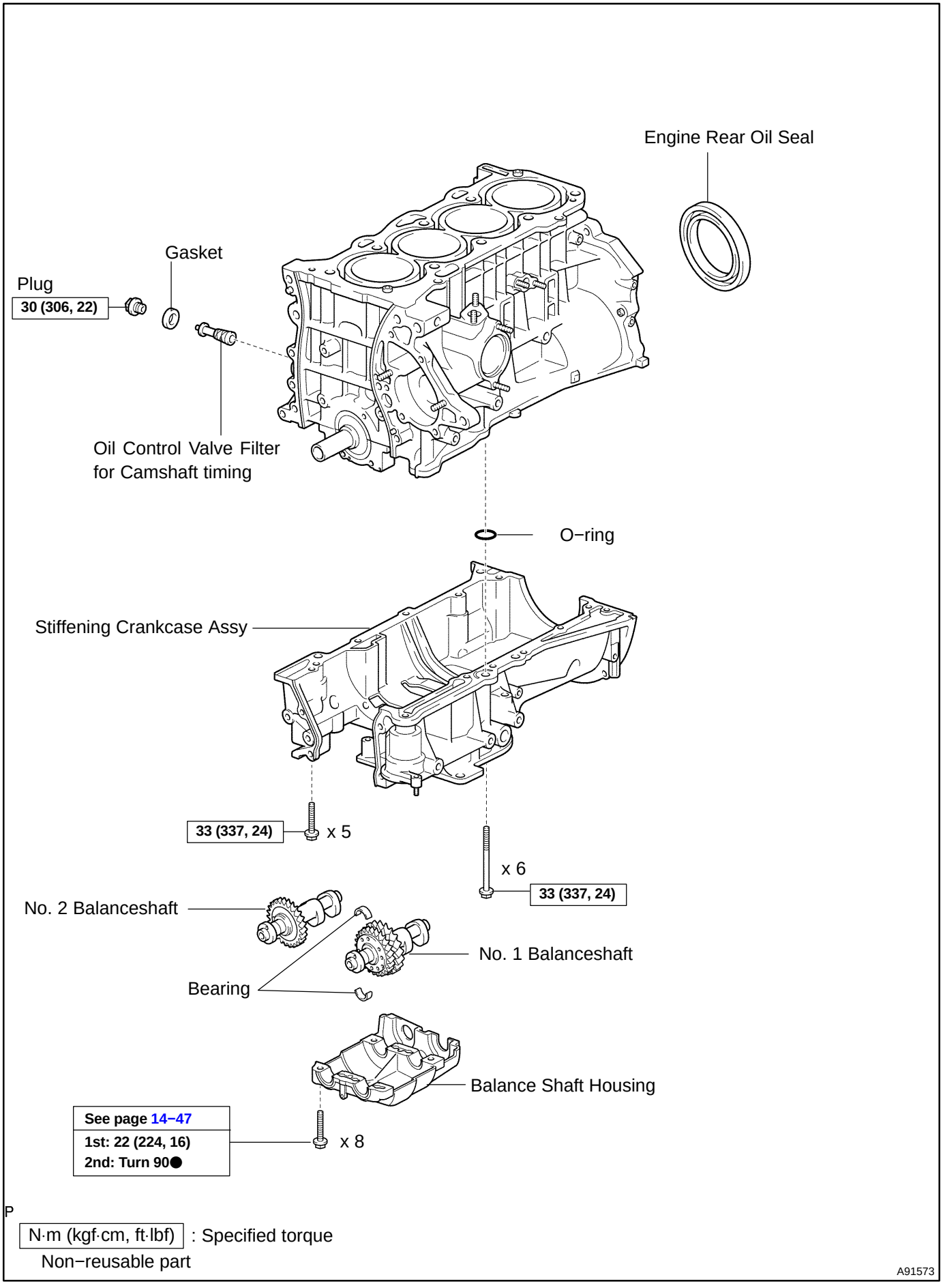
Engine Rear Oil Seal
Gasket
Plug
30 (306, 22)
Oil Control Valve Filter
for Camshaft timing
O−ring
Stiffening Crankcase Assy
33 (337, 24)
x 5
x 6
33 (337, 24)
No. 2 Balanceshaft
No. 1 Balanceshaft
Bearing
Balance Shaft Housing
See page 14−47
1st: 22 (224, 16)
2nd: Turn 90●
x 8
P
N·m (kgf·cm, ft·lbf) : Specified torque
Non−reusable part
A91573

141J2−02

REPLACEMENT

1. **WORK FOR PREVENTING GASOLINE FROM SPILLING OUT (See page 11−1)**
2. **REMOVE FRONT WHEELS**
3. **REMOVE ENGINE UNDER COVER LH**
4. **REMOVE ENGINE UNDER COVER RH**
5. **REMOVE FRONT FENDER APRON SEAL RH**
6. **DRAIN ENGINE OIL**
7. **DRAIN ENGINE COOLANT (See page 16−6)**
8. **DRAIN AUTOMATIC TRANSAXLE FLUID (A/T)**

(a) Using a 10 mm hexagon wrench, remove the drain plug and gasket. Drain automatic transaxle fluid.

(b) Install a new gasket and the drain plug.

Torque: 49 N·m (500 kgf·cm, 36 ft·lbf)

9. **DRAIN MANUAL TRANSAXLE OIL (M/T)**

(a) Install a new gasket and the drain plug after draining transaxle oil.

Torque: 49 N·m (500 kgf·cm, 36 ft·lbf)

10. **REMOVE BATTERY**
11. **REMOVE AIR CLEANER ASSY**
12. **REMOVE ENGINE COVER SUB−ASSY NO.1**
13. **DISCONNECT RADIATOR HOSE INLET**
14. **DISCONNECT RADIATOR HOSE OUTLET**
15. **DISCONNECT OIL COOLER OUTLET HOSE NO.2 (A/T)**
16. **DISCONNECT OIL COOLER OUTLET HOSE NO.3 (A/T)**

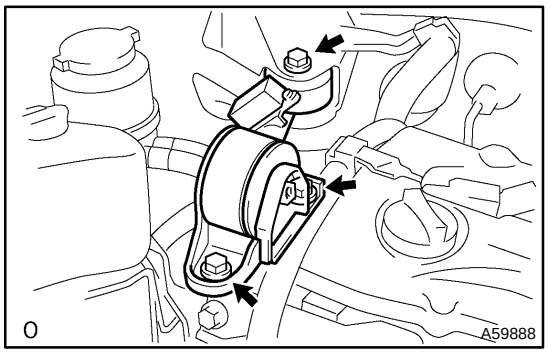

17. **REMOVE ENGINE MOVING CONTROL ROD W/BRACKET**

(a) Remove the 3 bolts and the engine moving control rod w/ bracket.

18. **REMOVE ENGINE MOUNTING STAY NO.2 RH**
19. **REMOVE ENGINE MOUNTING BRACKET NO.2 RH**
20. **REMOVE FAN AND GENERATOR V BELT (See page 14−5)**

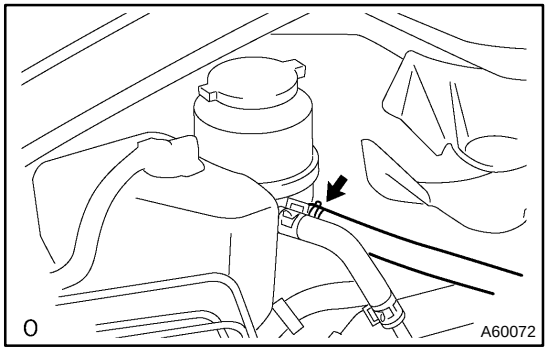

21. **DISCONNECT OIL RESERVOIR TO PUMP HOSE NO.1**

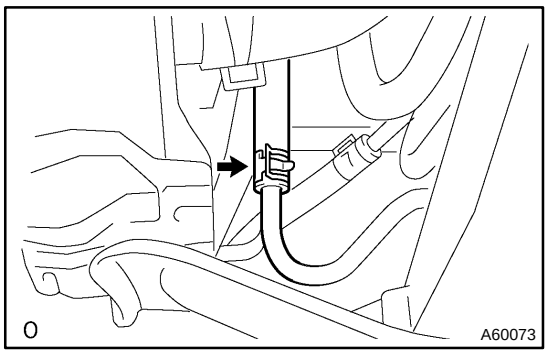

22. DISCONNECT RETURN TUBE SUB−ASSY

23. DISCONNECT UNION TO CONNECTOR TUBE HOSE

24. DISCONNECT FLOOR SHIFT CABLE TRANSMISSION CONTROL SHIFT (A/T) (See page 40−65)

25. DISCONNECT FLOOR SHIFT CABLE TRANSMISSION CONTROL SHIFT (M/T)

26. DISCONNECT FLOOR SHIFT CABLE TRANSMISSION CONTROL SELECT (M/T)

27. REMOVE CLUTCH RELEASE CYLINDER ASSY (M/T)

(a) Remove the bolt and flexible hose.

(b) Remove the 2 bolts and clutch release cylinder.

28. DISCONNECT HEATER INLET WATER HOSE

29. DISCONNECT HEATER OUTLET WATER HOSE

30. DISCONNECT FUEL TUBE SUB−ASSY (See page 11−1)

31. DISCONNECT ENGINE WIRE

(a) Disconnect the engine wire from the ECM and J/B.

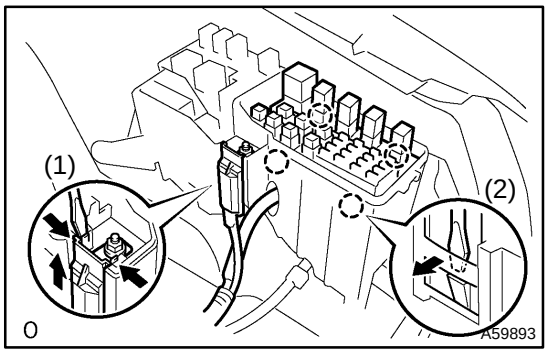

(b) Disconnect the engine wire from the engine room J/B.

(1) Remove the nut fixing the wire harness.

(2) Using a screwdriver, unlock the engine room J/B. Disconnect the engine wire by pulling it upward.

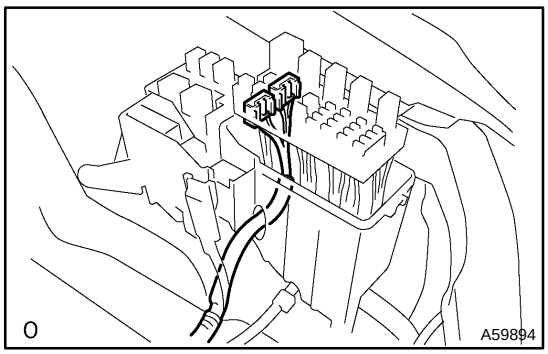

(3) Disconnect the connectors.

(c) Pull out the engine wire.

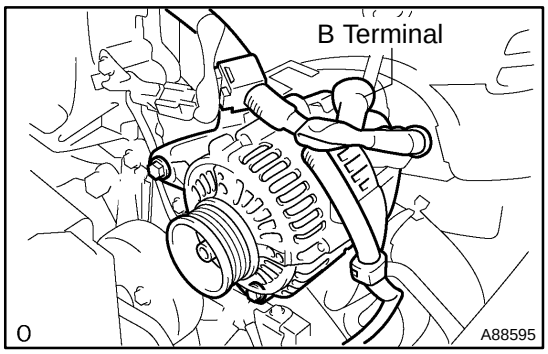

(d) Disconnect the B terminal of the generator.
(e) Remove the body ground.
(f) Remove the starter connector.

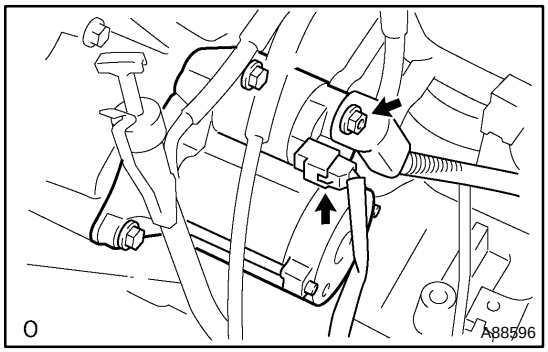

32. DISCONNECT ENGINE WIRE NO.2

(a) Remove the nut and disconnect terminal 30 of the starter.

33. REMOVE GENERATOR ASSY

34. REMOVE COMPRESSOR AND MAGNETIC CLUTCH

HINT:

Hang up the hoses instead of detaching.

35. REMOVE EXHAUST PIPE ASSY FRONT

36. REMOVE FRONT STABILIZER LINK ASSY LH

(a) Using a 6 mm socket hexagon wrench, fix the stud bolt.
(b) Remove the nut and disconnect the stabilizer link.

37. REMOVE FRONT STABILIZER LINK ASSY RH

HINT:

Use the same procedures described for the LH side.

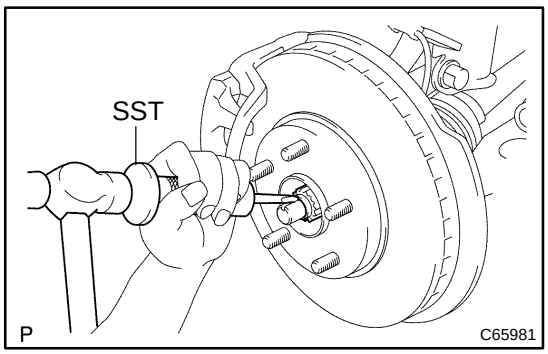

38. REMOVE FRONT AXLE HUB LH NUT

(a) Using SST and a hammer, strike the lock nut covering to remove it.
SST 09930−00010

NOTICE:

- **Set the drive shaft's groove so that it faces up. Then use the SST and hammer.**
- **Remove the covering from the lock nut completely or the screw of the drive shaft may be damaged.**
- **Do not sharpen the tip of the SST.**

(b) Using a 30 mm socket wrench, remove the lock nut.

39. REMOVE FRONT AXLE HUB RH NUT

HINT:

Use the same procedures described for the LH side.

40. REMOVE SPEED SENSOR FRONT LH (W/ ABS)

(a) Remove the bolt and disconnect the speed sensor from the steering knuckle.

NOTICE:

Keep the speed sensor tip and connection free from foreign matter.

41. REMOVE SPEED SENSOR FRONT RH (W/ ABS)

HINT:

Use the same procedures described for the LH side.

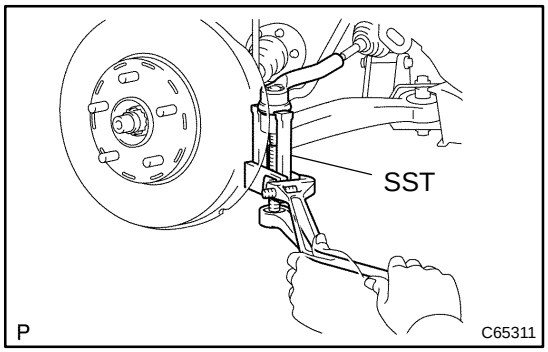

42. DISCONNECT TIE ROD ASSY LH

(a) Remove the cotter pin and castle nut.

(b) Using SST, disconnect the tie rod end from the steering knuckle.

SST 09628−62011

NOTICE:

Be careful not to damage the cover of the ball joint.

43. DISCONNECT TIE ROD ASSY RH

HINT:

Use the same procedures described for the LH side.

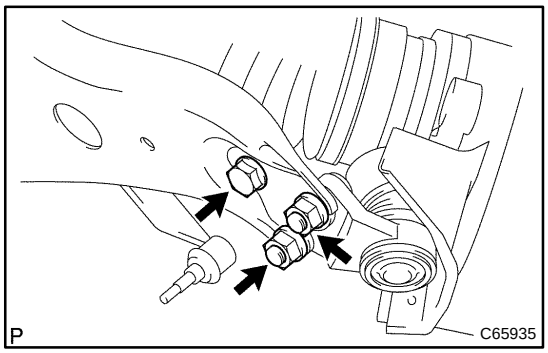

44. DISCONNECT FRONT SUSPENSION ARM SUB−ASSY LOWER NO.1 LH

(a) Remove the bolt and 2 nuts, as shown in the illustration.

(b) Using a plastic hammer, disconnect the drive shaft from the axle hub.

45. DISCONNECT FRONT SUSPENSION ARM SUB−ASSY LOWER NO.1 RH

HINT:

Use the same procedures described for the LH side.

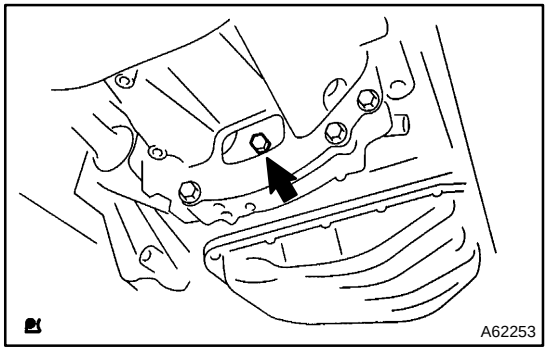

46. REMOVE DRIVE PLATE & TORQUE CONVERTER CLUTCH SETTING BOLT

(a) Fix the crankshaft and remove the 6 setting bolts.

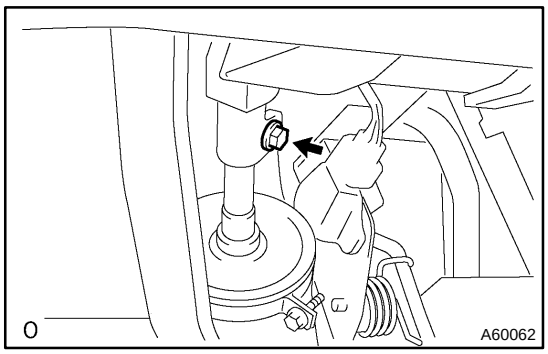

47. REMOVE STEERING INTERMEDIATE SHAFT ASSY

(a) Loosen the sliding yoke bolt.

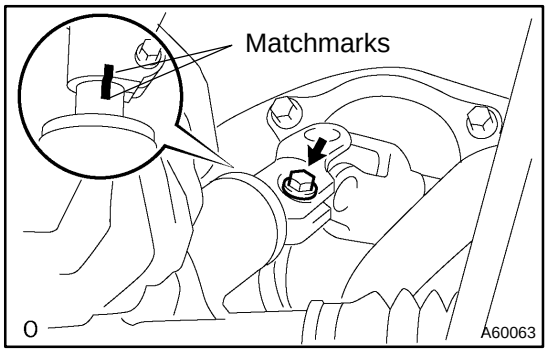

(b) Place matchmarks on the intermediate shaft and control valve shaft.

(c) Remove the bolt and the steering intermediate shaft.

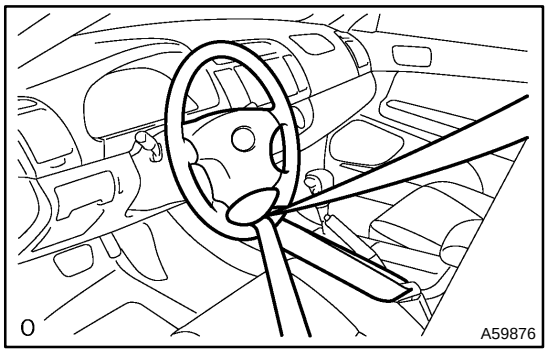

(d) To prevent the steering wheel from rotating, fix the wheel with the seat belt.

NOTICE:

If the steering wheel is not fixed, the spiral cable will be damaged.

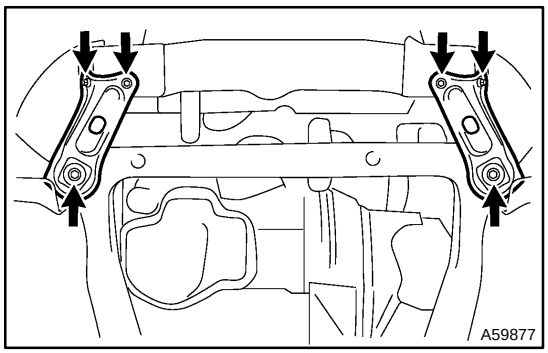

48. REMOVE ENGINE ASSEMBLY WITH TRANSAXLE

(a) Set the engine lifter.

(b) Remove the 4 bolts, 2 nuts and frame side rail plate RH and LH.

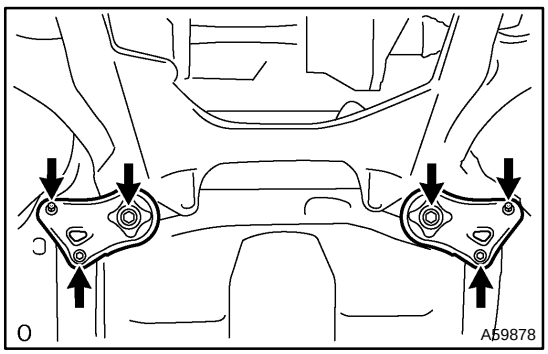

(c) Remove the 4 bolts, 2 nuts and front suspension member brace rear RH and LH.

(d) Carefully remove the engine assembly from the vehicle.

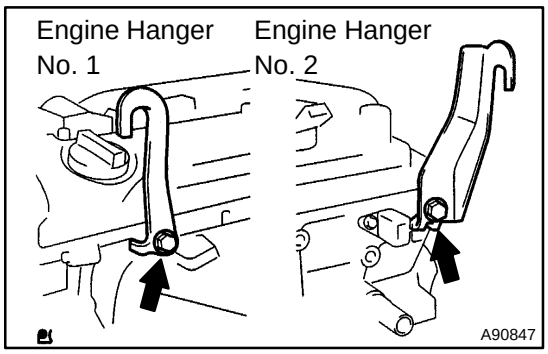

(e) Install the 2 engine hangers as shown in the illustration.
Parts No.:

Engine hanger No. 1	12281−28010
Engine hanger No. 2	12282−28010
Bolt	91512−61020

Torque: 38 N·m (387 kgf·cm, 28 ft lbf)

(f) Using a chain block and an engine sling device, hang the engine assembly.

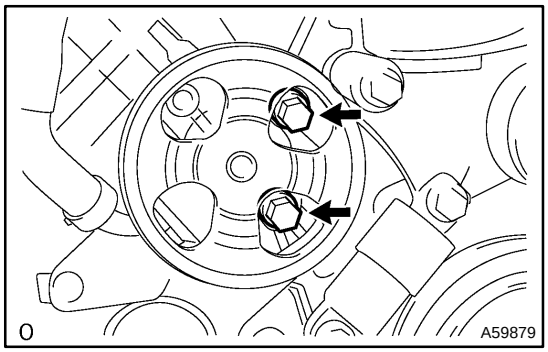

49. REMOVE VANE PUMP ASSY

(a) Disconnect the PS oil pressure switch connector.

(b) Remove the 2 bolts and vane pump from the engine.

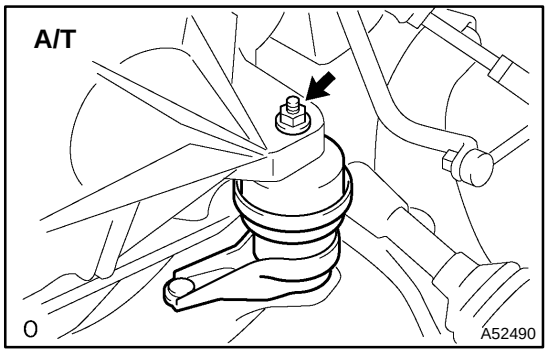

50. REMOVE FRONT FRAME ASSY

(a) A/T:
Remove the nut installing the engine mounting insulator LH.

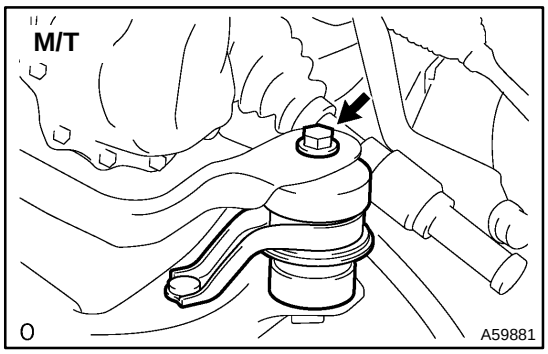

(b) M/T:
Remove the bolt installing the engine mounting insulator LH.

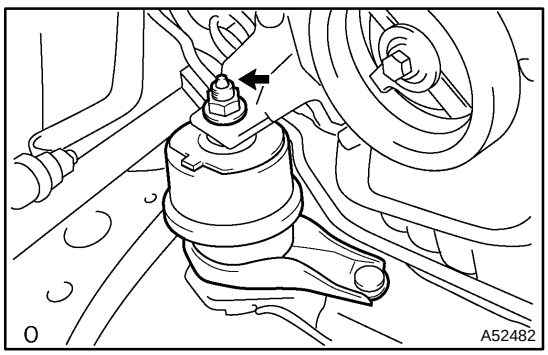

(c) Remove the nut installing the engine mounting insulator RH.

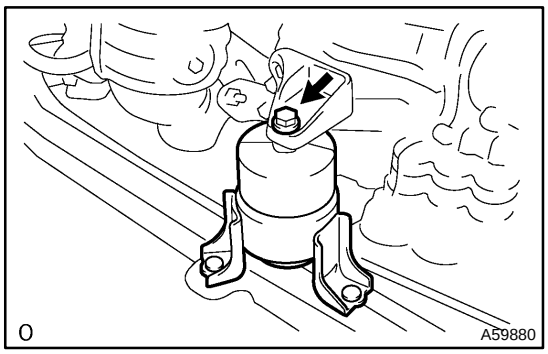

(d) Remove the bolt installing the engine mounting insulator FR.

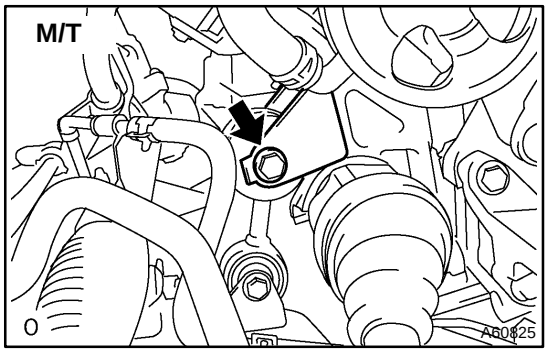

(e) M/T:
Remove the bolt installing the engine lateral control rod.

(f) Raise the engine assembly and separate the front frame.

51. REMOVE FRONT DRIVE SHAFT ASSY LH (See page 30−8)

52. REMOVE FRONT DRIVE SHAFT ASSY RH (See page 30−8)

53. REMOVE STARTER ASSY (See page 19−5)

54. SEPARATE AUTOMATIC TRANSAXLE ASSY (A/T) (See page 40−18)

55. SEPARATE MANUAL TRANSAXLE ASSY (M/T) (See page 41−11)

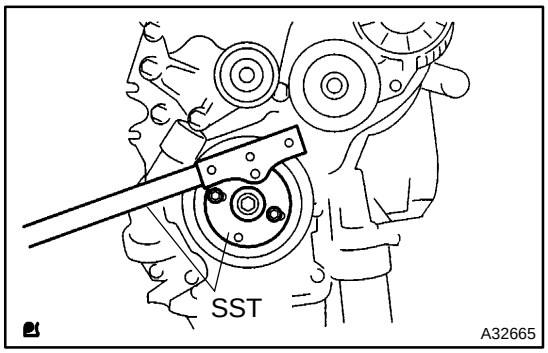

56. REMOVE DRIVE PLATE & RING GEAR SUB−ASSY (A/T)

(a) TMC made:
Using SST, fix the crankshaft.
SST 09213−54015 (91651−60855), 09330−00021

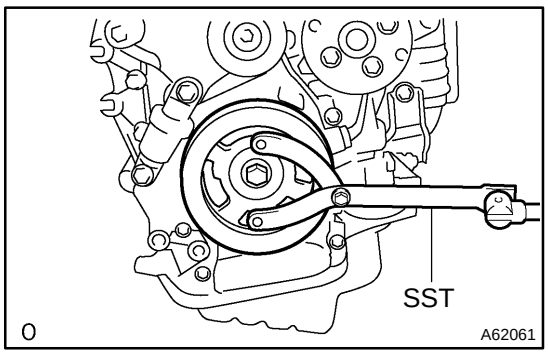

(b) TMMK made:
Using SST, fix the crankshaft.
SST 09960−10010 (09962−01000, 09963−01000)

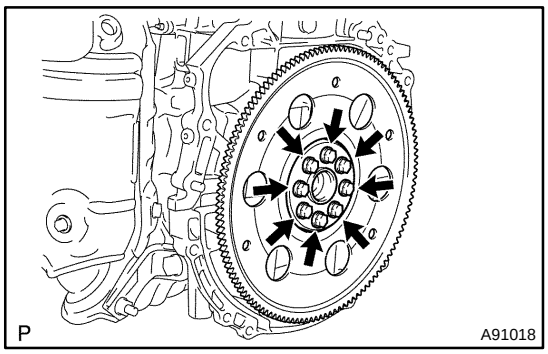

(c) Remove the 8 bolts, rear spacer, drive plate and front spacer.

57. REMOVE CLUTCH COVER ASSY (M/T) (See page 42−15)

58. REMOVE CLUTCH DISC ASSY (M/T) (See page 42−15)

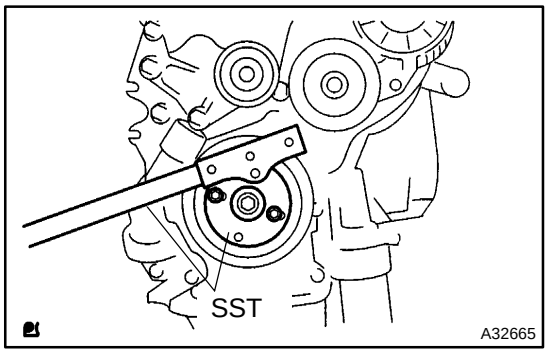

59. REMOVE FLYWHEEL SUB−ASSY (M/T)

(a) Using SST, fix the crankshaft.
SST 09213−54015 (91651−60855), 09330−00021

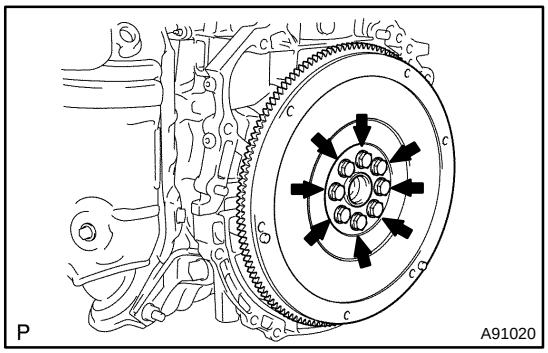

(b) Remove the 8 bolts, rear spacer and flywheel.

60. INSTALL ENGINE STAND

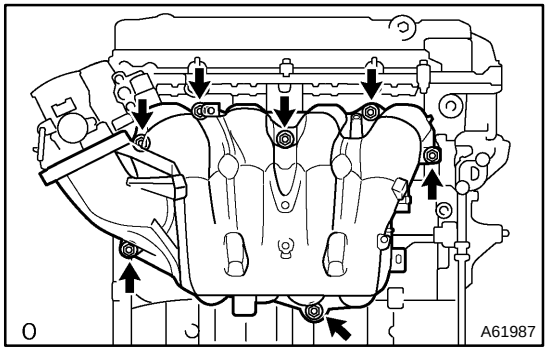

61. REMOVE INTAKE MANIFOLD

(a) Remove the 5 bolts, 2 nuts, intake manifold and gasket.

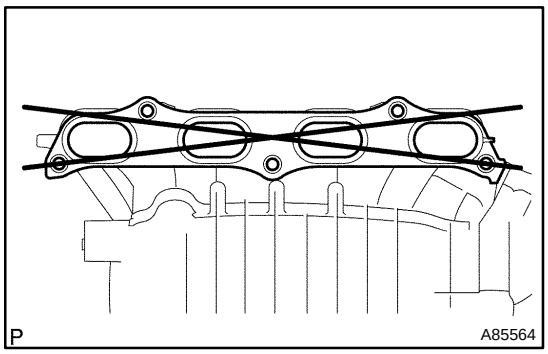

62. INSPECT INTAKE MANIFOLD

(a) Using a precision straight edge and feeler gauge, measure the surface contacting the cylinder head for warpage.

Maximum warpage: 0.20 mm (0.0079 in.)

If the warpage is greater than maximum, replace the manifold.

63. REMOVE INTAKE MANIFOLD RUNNER VALVE ASSY (PZEV only) (See page 13−5)

64. REMOVE VENTILATION HOSE

65. REMOVE VENTILATION HOSE NO.2

66. REMOVE ENGINE WIRE

67. REMOVE INTAKE MANIFOLD INSULATOR NO.1

68. REMOVE OIL LEVEL GAGE SUB−ASSY

69. REMOVE OIL LEVEL GAGE GUIDE

70. REMOVE MANIFOLD CONVERTER INSULATOR NO.1

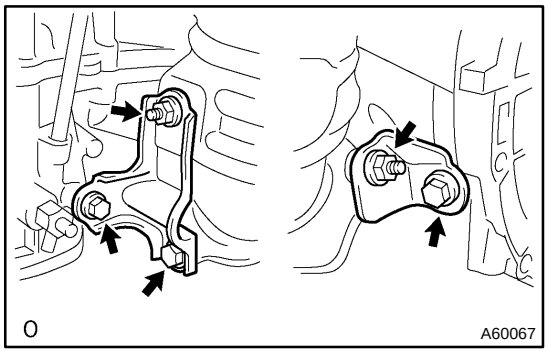

71. REMOVE EXHAUST MANIFOLD CONVERTER SUB−ASSY

(a) Remove the 3 bolts, 2 nuts, and the No. 1 and No. 2 exhaust manifold stays.

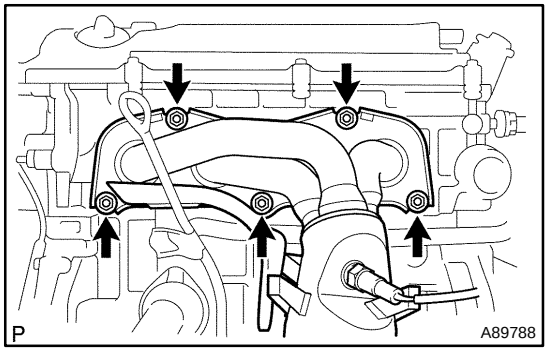

(b) Remove the 5 nuts, exhaust manifold converter and gasket.

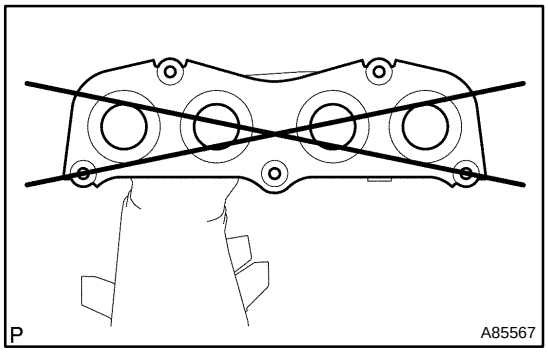

72. INSPECT CONVERTER SUB−ASSY, EXHAUST MANIFOLD

(a) Using a precision straight edge and feeler gauge, measure the surface contacting the cylinder head for warpage.

Maximum warpage: 0.70 mm (0.0276 in.)

If the warpage is greater than the maximum, replace the manifold.

73. REMOVE WATER INLET
74. REMOVE THERMOSTAT
75. REMOVE IGNITION COIL ASSY

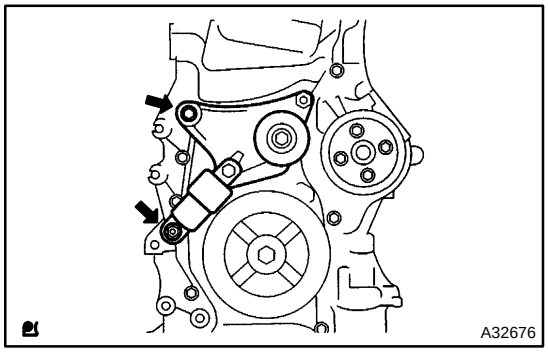

76. REMOVE V−RIBBED BELT TENSIONER ASSY
(a) Remove the bolt, nut and belt tensioner.

77. REMOVE DRIVE SHAFT BEARING BRACKET
78. REMOVE ENGINE MOUNTING BRACKET RH
79. REMOVE FUEL DELIVERY PIPE W/INJECTOR (See page 11−10)
80. REMOVE WATER BY−PASS PIPE NO.1

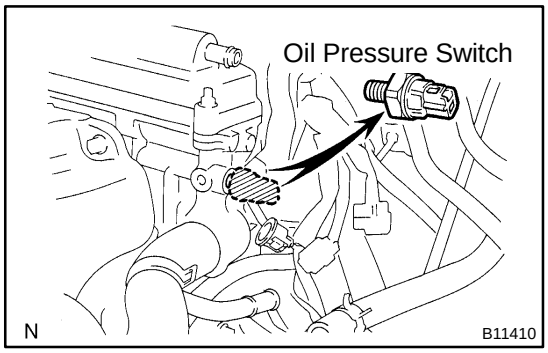

81. REMOVE ENGINE OIL PRESSURE SWITCH ASSY
(a) Remove the oil pressure switch.

82. REMOVE KNOCK SENSOR
(a) Disconnect the sensor connector.
(b) Remove the nut and sensor.
83. REMOVE ENGINE COOLANT TEMPERATURE SENSOR
84. REPLACE PARTIAL ENGINE ASSY
85. INSTALL ENGINE COOLANT TEMPERATURE SENSOR
(a) Install a new gasket to the sensor.
(b) Install the sensor.
Torque: 20 N·m (204 kgf·cm, 15 ft·lbf)

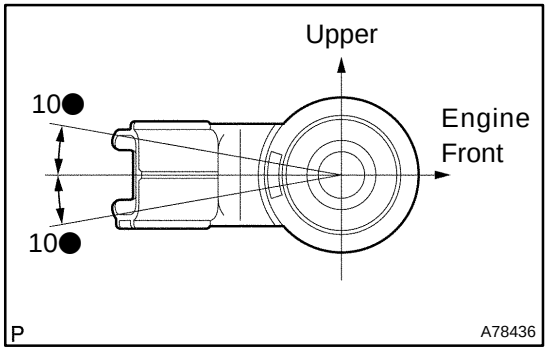

86. INSTALL KNOCK SENSOR
(a) Install the sensor with the nut, as shown in the illustration.
Torque: 20 N·m (204 kgf·cm, 15 ft·lbf)

87. INSTALL ENGINE OIL PRESSURE SWITCH ASSY

(a) Clean the threads of the oil pressure switch. Apply adhesive to 2 or 3 threads of the oil.
Adhesive: Part No. 08833−00080 THREE BOND 1344 or equivalent

(b) Install the oil pressure switch.
Torque: 15 N·m (153 kgf·cm, 11 ft·lbf)

88. INSTALL WATER BY−PASS PIPE NO.1

(a) Install a new gasket and the by−pass pipe with the bolt and 2 nuts.
Torque: 9.0 N·m (92 kgf·cm, 80 in.·lbf)

89. INSTALL FUEL DELIVERY PIPE W/INJECTOR (See page 11−10)

90. INSTALL ENGINE MOUNTING BRACKET RH
Torque: 54 N·m (551 kgf·cm, 40 ft·lbf)

91. INSTALL DRIVE SHAFT BEARING BRACKET
Torque: 64 N·m (653 kgf·cm, 47 ft·lbf)

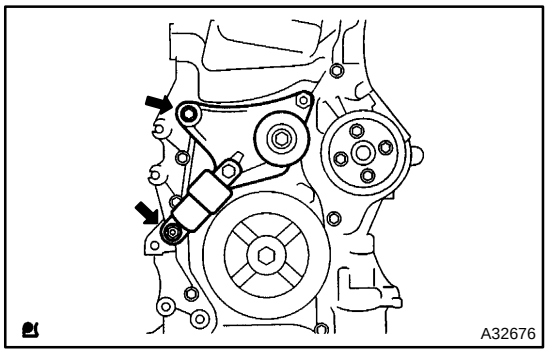

92. INSTALL V−RIBBED BELT TENSIONER ASSY

(a) Install the belt tensioner with the bolt and the nut.
Torque: 59.5 N·m (607 kgf·cm, 44 ft·lbf)

93. INSTALL IGNITION COIL ASSY
Torque: 9.0 N·m (92 kgf·cm, 80 in.·lbf)

94. INSTALL THERMOSTAT (See page 16−11)

95. INSTALL WATER INLET
Torque: 9.0 N·m (92 kgf·cm, 80 in.·lbf)

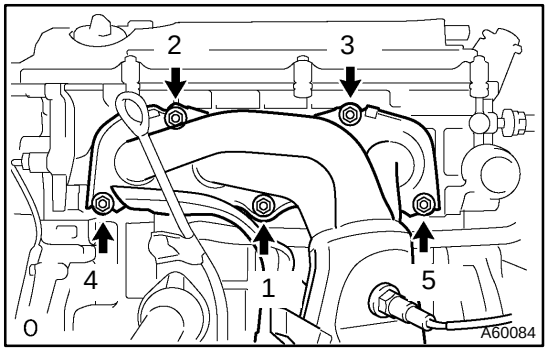

96. INSTALL EXHAUST MANIFOLD CONVERTER SUB−ASSY

(a) Install a new gasket and the exhaust manifold converter. Uniformly tighten the 5 nuts in the sequence shown in the illustration.
Torque: 37 N·m (378 kgf·cm, 27 ft·lbf)

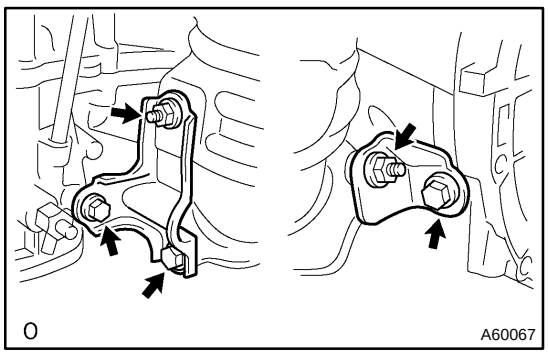

(b) Install the No. 1 and No. 2 exhaust manifold stays with the 3 bolts and 2 nuts.
Torque: 44 N·m (449 kgf·cm, 32 ft·lbf)

97. INSTALL MANIFOLD CONVERTER INSULATOR NO.1
Torque: 12 N·m (122 kgf·cm, 9 ft·lbf)

98. INSTALL OIL LEVEL GAGE GUIDE

(a) Apply a light coat of engine oil to the O−ring and install it to the guide.

(b) Install the oil level gage and guide with the bolt.
Torque: 9.0 N·m (92 kgf·cm, 80 in.·lbf)

99. INSTALL INTAKE MANIFOLD RUNNER VALVE ASSY (PZEV only) (See page 13−5)

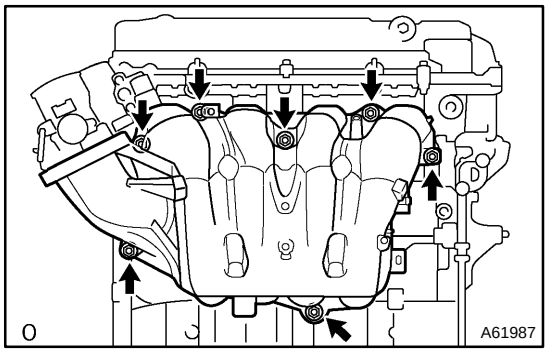

100. INSTALL INTAKE MANIFOLD

(a) Install a new gasket and the intake manifold with the 5 bolts and 2 nuts.
Torque: 30 N·m (306 kgf·cm, 22 ft·lbf)

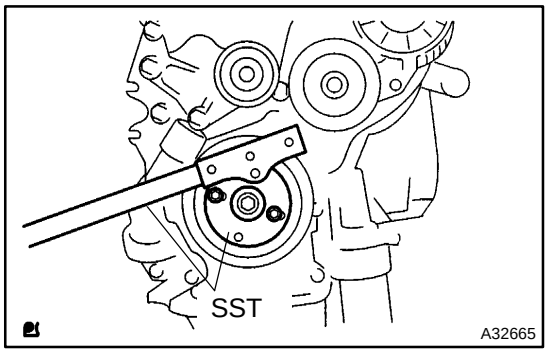

101. INSTALL DRIVE PLATE & RING GEAR SUB−ASSY (A/T)

(a) TMC made:
Using SST, fix the crankshaft.
SST 09213−54015 (91651−60855), 09330−00021

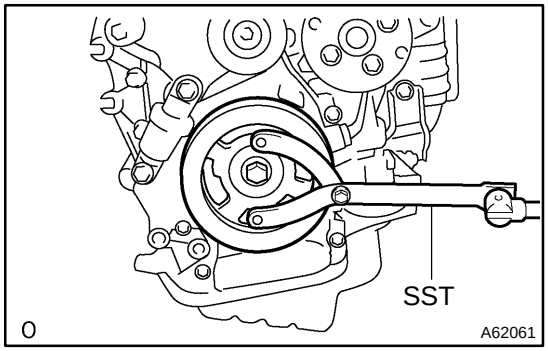

(b) TMMK made:
Using SST, fix the crankshaft.
SST 09960−10010 (09962−01000, 09963−01000)

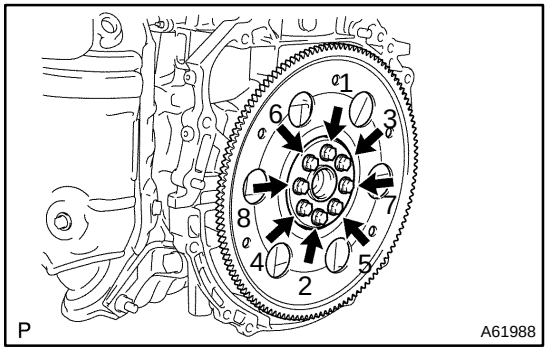

(c) Clean the bolt and the bolt hole.

(d) Apply adhesive to 2 or 3 threads of the bolt end.
Adhesive:
Part No. 08833−00070, THREE BOND or equivalent.

(e) Install the front spacer, drive plate and rear spacer with 8 bolts. Uniformly tighten the 8 bolts in the sequence shown in the illustration.
Torque: 98 N·m (1,000 kgf·cm, 72 ft·lbf)

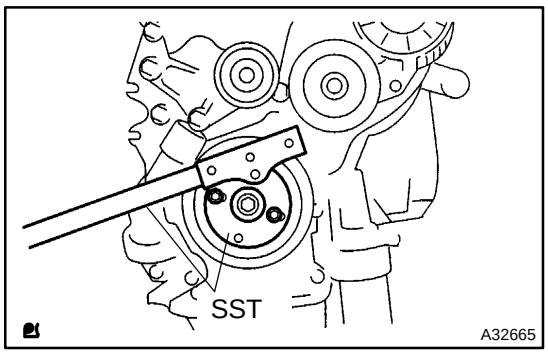

102. INSTALL FLYWHEEL SUB−ASSY

(a) Using SST, fix the crankshaft.
SST 09213−54015 (91651−60855), 09330−00021

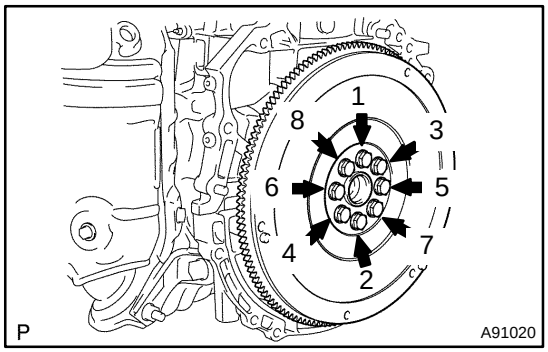

(b) Clean the bolt and the bolt hole.

(c) Apply adhesive to 2 or 3 threads of the bolt end.
Adhesive:
Part No. 08833−00070, THREE BOND or equivalent.

(d) Install the flywheel. Uniformly tighten the 8 bolts in the sequence shown in the illustration.
Torque: 130 N·m (1,330 kgf·cm, 96 ft·lbf)

103. INSTALL CLUTCH DISC ASSY (M/T) (See page 42−15)
104. INSTALL CLUTCH COVER ASSY (M/T) (See page 42−15)
105. INSTALL AUTOMATIC TRANSAXLE ASSY (A/T) (See page 40−18)
106. INSTALL MANUAL TRANSAXLE ASSY (M/T) (See page 41−11)
107. INSTALL STARTER ASSY (See page 19−5)
Torque: 39 N·m (398 kgf·cm, 29 ft·lbf)
108. INSTALL FRONT DRIVE SHAFT ASSY RH (See page 30−8)
109. INSTALL FRONT DRIVE SHAFT ASSY LH (See page 30−8)

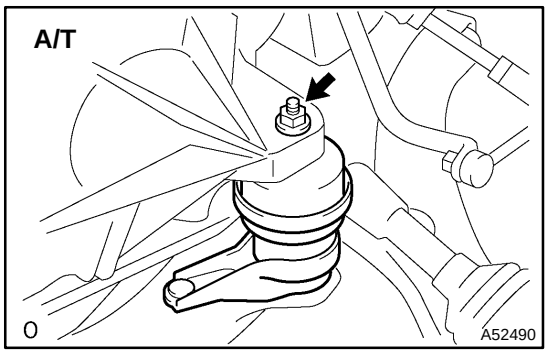

110. INSTALL FRONT FRAME ASSY

(a) A/T:
Install the engine mounting insulator LH with the nut.
Torque: 95 N·m (969 kgf·cm, 70 ft·lbf)

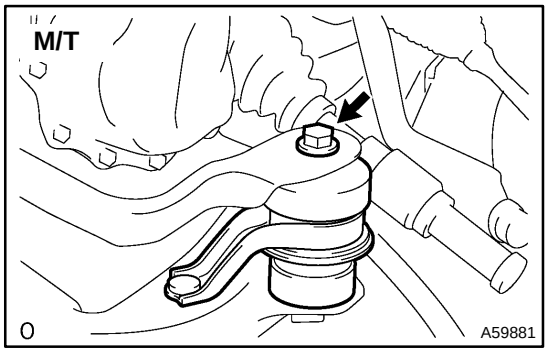

(b) M/T:
Install the engine mounting insulator LH with the bolt.
Torque: 143 N·m (1,459 kgf·cm, 105 ft·lbf)

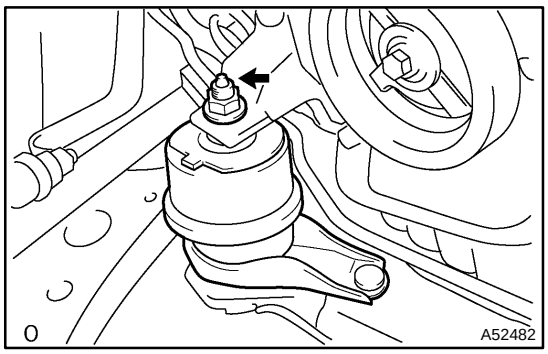

(c) Install the engine mounting insulator RH with the nut.
Torque: 95 N·m (969 kgf·cm, 70 ft·lbf)

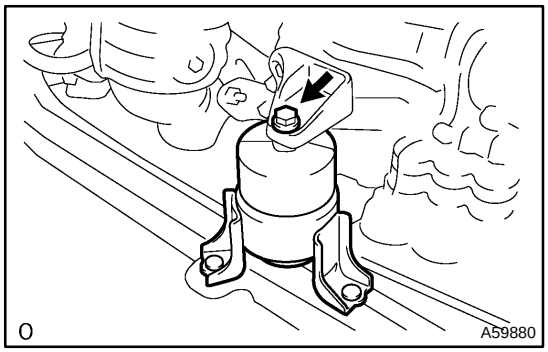

(d) Install the engine mounting insulator FR with the bolt.
Torque: 87 N·m (888 kgf·cm, 64 ft·lbf)

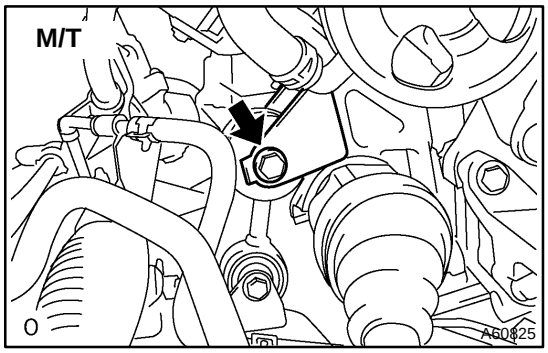

(e) M/T:
Install the engine lateral control rod with the bolt.
Torque: 89 N·m (910 kgf·cm, 66 ft·lbf)

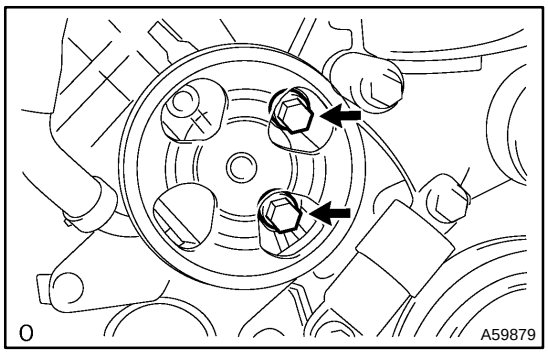

111. INSTALL VANE PUMP ASSY

(a) Install the vane pump to the engine with the 2 bolts.
(b) Connect the PS oil pressure switch connector.
Torque: 43 N·m (439 kgf·cm, 32 ft·lbf)

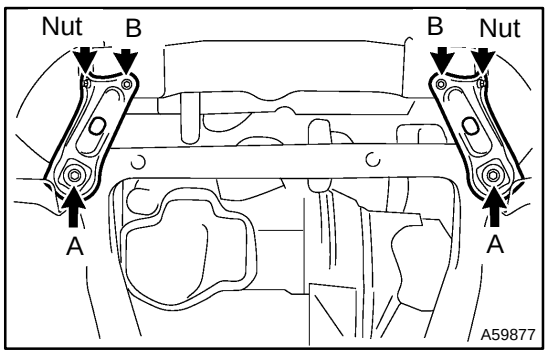

112. INSTALL ENGINE ASSEMBLY WITH TRANSAXLE

(a) Set the engine assembly with transaxle on the engine lifter.
(b) Install the engine assembly to the vehicle.
(c) Install the frame side plate LH and RH with the 4 bolts and 2 nuts.
Torque:
85 N·m (867 kgf·cm, 63 ft·lbf) for bolt A
32 N·m (326 kgf·cm, 24 ft·lbf) for bolt B and nut

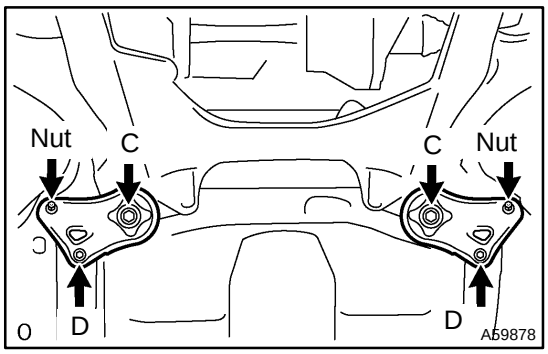

(d) Install the front suspension member brace rear RH and LH with the 4 bolts and 2 nuts.
Torque:
85 N·m (867 kgf·cm, 63 ft·lbf) for bolt C
32 N·m (326 kgf·cm, 24 ft·lbf) for bolt D and nut

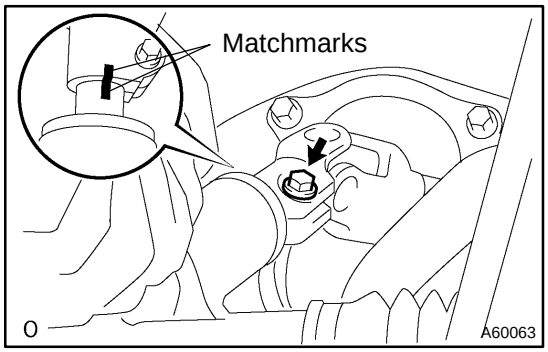

113. INSTALL STEERING INTERMEDIATE SHAFT ASSY

(a) Align the matchmarks on the intermediate shaft and control valve shaft.
Torque: 35 N·m (357 kgf·cm, 26 ft·lbf)

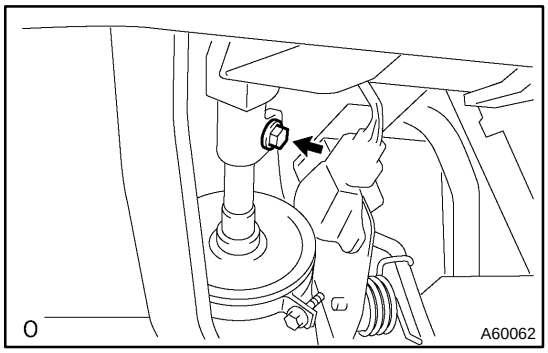

(b) Tighten the bolt.
Torque: 35 N·m (357 kgf·cm, 26 ft·lbf)

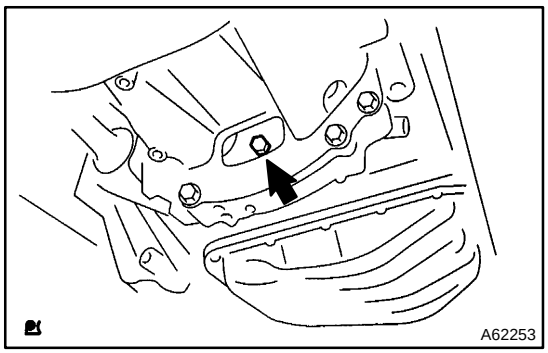

114. INSTALL DRIVE PLATE & TORQUE CONVERTER CLUTCH SETTING BOLT (A/T)

(a) Fix the crankshaft, and install the 6 setting bolts.
Torque: 41 N·m (418 kgf·cm, 30 ft·lbf)

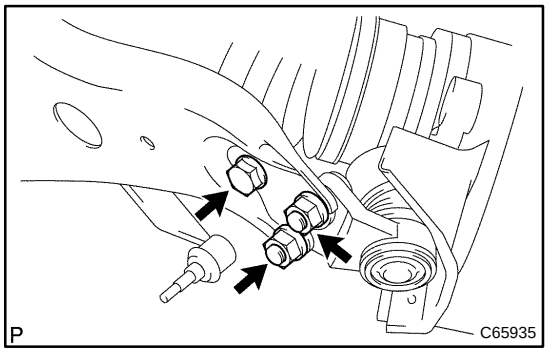

115. INSTALL FRONT SUSPENSION ARM SUB−ASSY LOWER NO.1 LH

(a) Install the drive shaft to the steering knuckle.
(b) Install the suspension lower arm with the bolt and the 2 nuts.
Torque: 75 N·m (765 kgf·cm, 55 ft·lbf)

116. INSTALL FRONT SUSPENSION ARM SUB−ASSY LOWER NO.1 RH

HINT:

Use the same procedures described for the LH side.

117. INSTALL TIE ROD ASSY LH

(a) Connect the tie rod end to the steering knuckle and install a new castle nut.
Torque: 49 N·m (500 kgf·cm, 36 ft·lbf)

NOTICE:

- **Prevent any lubricant from contacting the thread and the taper portions.**
- **After tightening the castle nut, tighten it to the additional direction within 60● to put into a cotter pin.**

(b) Insert a new cotter pin.

118. INSTALL TIE ROD ASSY RH

HINT:

Use the same procedures described for the LH side.

119. INSTALL SPEED SENSOR FRONT LH (W/ABS)
Torque: 8.0 N·m (82 kgf·cm, 71 in.·lbf)

120. INSTALL SPEED SENSOR FRONT RH (W/ABS)
Torque: 8.0 N·m (82 kgf·cm, 71 in.·lbf)

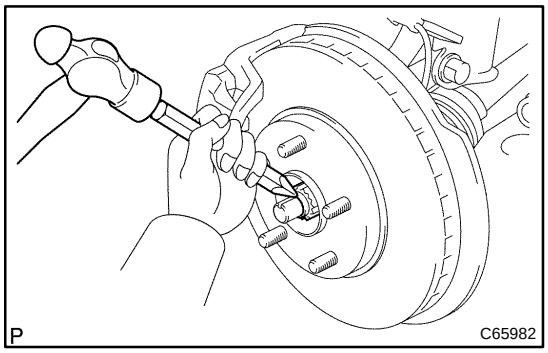

121. INSTALL FRONT AXLE HUB LH NUT

(a) Using a 30 mm socket wrench, install a new hub nut.
Torque: 294 N·m (3,000 kgf·cm, 217 ft·lbf)

(b) Using a chisel and hammer, tapped the front axle hub LH nut.

122. INSTALL FRONT AXLE HUB RH NUT

HINT:

Use the same procedures described for the LH side.

123. INSTALL FRONT STABILIZER LINK ASSY LH

(a) Using a 5 mm socket hexagon wrench, fix the stud bolt and install the nut.
Torque: 74 N·m (755 kgf·cm, 55 ft·lbf)

124. INSTALL FRONT STABILIZER LINK ASSY RH

HINT:

Use the same procedures described for the LH side.

125. INSTALL EXHAUST PIPE ASSY FRONT (See page 15−3)

126. CONNECT FUEL TUBE SUB−ASSY (See page 11−1)

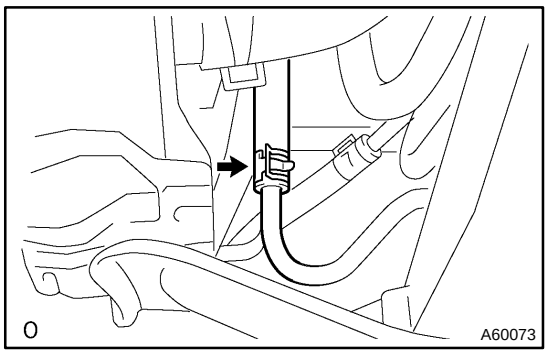

127. INSTALL RETURN TUBE SUB−ASSY

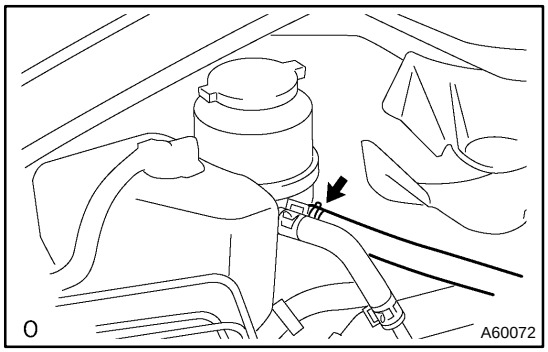

128. INSTALL OIL RESERVOIR TO PUMP HOSE NO.1

129. INSTALL COMPRESSOR AND MAGNETIC CLUTCH (See page 55−68)
130. INSTALL GENERATOR ASSY (See page 19−17)
131. INSTALL FAN AND GENERATOR V BELT (See page 14−5)
132. CONNECT ENGINE WIRE NO.2
133. CONNECT ENGINE WIRE
134. INSTALL ENGINE MOUNTING BRACKET NO.2 RH
Torque: 52 N·m (531 kgf·cm, 38 ft·lbf)
135. INSTALL ENGINE MOUNTING STAY NO.2 RH
Torque: 64 N·m (653 kgf·cm, 47 ft·lbf)

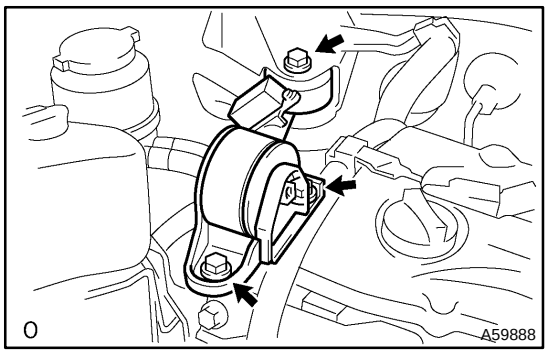

136. INSTALL ENGINE MOVING CONTROL ROD W/BRACKET
(a) Install the engine mounting control rod with the 3 bolts.
Torque: 64 N·m (653 kgf·cm, 47 ft·lbf)

137. INSTALL AIR CLEANER ASSY
Torque: 5.0 N·m (51 kgf·cm, 44 in.·lbf)
138. ADD AUTOMATIC TRANSAXLE FLUID (A/T)
139. ADD MANUAL TRANSAXLE OIL (M/T)
140. ADD ENGINE OIL
141. ADD ENGINE COOLANT (See page 16−6)
142. ADD POWER STEERING FLUID
143. BLEED POWER STEERING FLUID
144. CHECK FOR OIL LEAKS
145. CHECK FOR ENGINE COOLANT LEAKS (See page 16−1)

146. CHECK FOR FUEL LEAKS (See page 11−4)
147. INSTALL FRONT WHEEL
148. ADJUST FRONT WHEEL ALIGNMENT (See page 26−5)
149. INSPECT CHECK IDLE SPEED AND IGNITION TIMING (See page 14−1)
150. INSPECT CO/HC
151. CHECK ABS SPEED SENSOR SIGNAL (W/ ABS) (See page 05−873, 05−933 or 05−990)

141J4−01

OVERHAUL

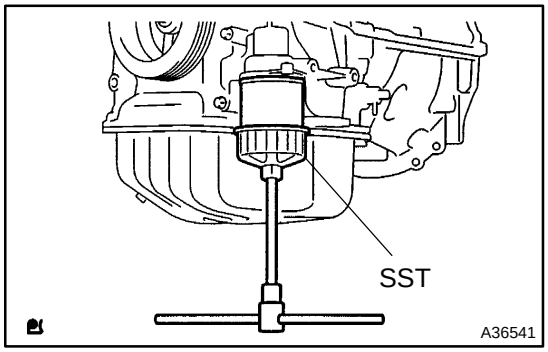

1. REMOVE OIL FILTER SUB−ASSY

(a) Using SST, remove the oil filter.
SST 09228−06501

2. REMOVE OIL FILTER UNION

(a) Using a 12 mm hexagon wrench, remove the union.

3. REMOVE OIL FILLER CAP SUB−ASSY

4. REMOVE VENTILATION VALVE SUB−ASSY

5. REMOVE SPARK PLUG

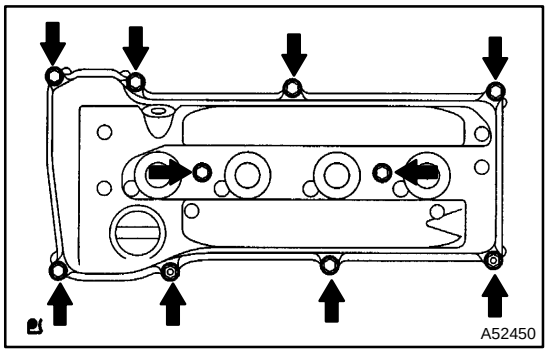

6. REMOVE CYLINDER HEAD COVER SUB−ASSY

(a) Remove the 8 bolts, 2 nuts, and cylinder head cover.

7. REMOVE CYLINDER HEAD COVER GASKET

8. REMOVE CRANKSHAFT POSITION SENSOR

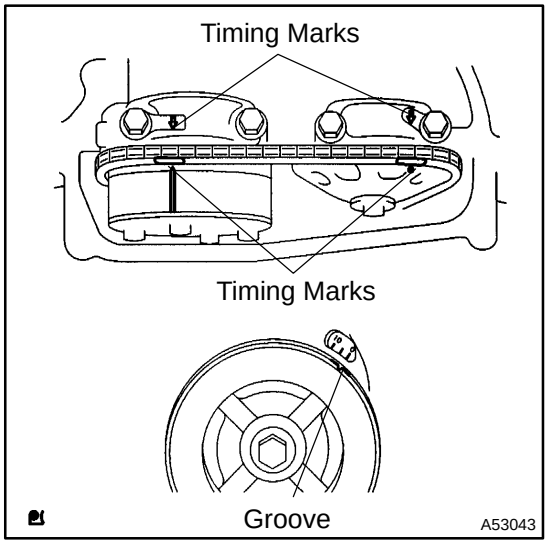

9. REMOVE CRANKSHAFT PULLEY

(a) Turn the crankshaft pulley and align its groove with timing mark 0 of the timing chain cover.

(b) Check that the timing marks of the camshaft timing sprockets are aligned with the timing marks of the No. 1 bearing cap, as shown in the illustration.

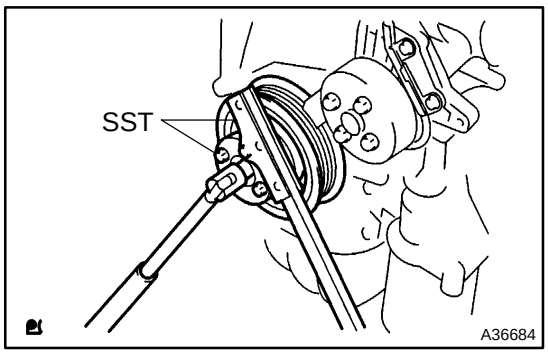

(c) TMC made:
Remove the crankshaft pulley.
(1) Using SST, fix the pulley and loosen the bolt.
SST 09213−54015 (91651−60855), 09330−00021

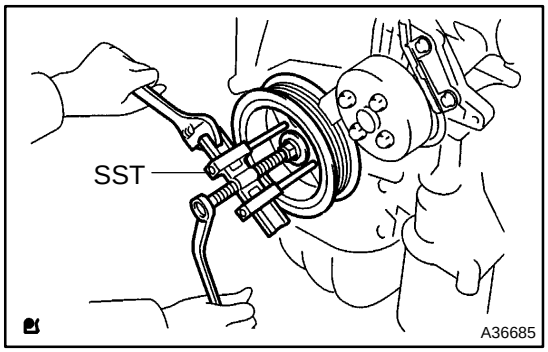

(2) Using SST, remove the bolt and pulley.
SST 09950−50013 (09951−05010, 09952−05010, 09953−05020, 09954−05021)

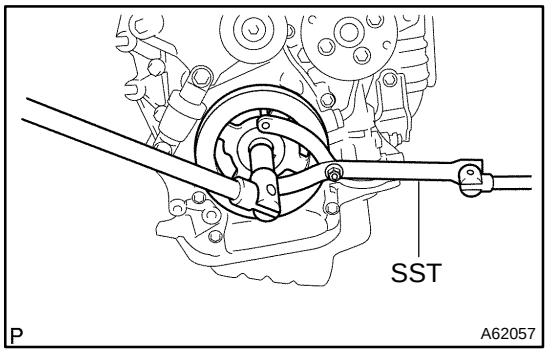

(d) TMMK made:
Remove the crankshaft pulley.
(1) Using SST, fix the crankshaft pulley and loosen a pulley set bolt.
SST 09960−10010 (09962−01000, 09963−01000)

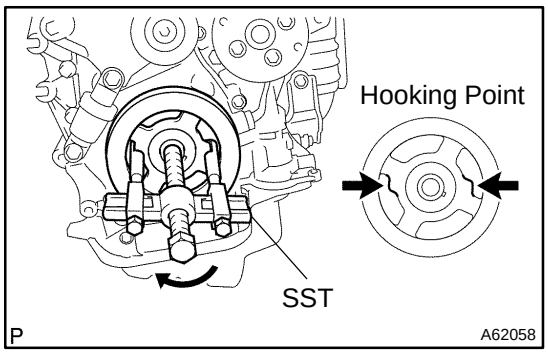

(2) Using SST, remove the crankshaft pulley.
SST 09950−40011 (09951−04010, 09952−04010, 09953−04030, 09954−04010, 09955−04041, 09957−04010, 91111−51014)

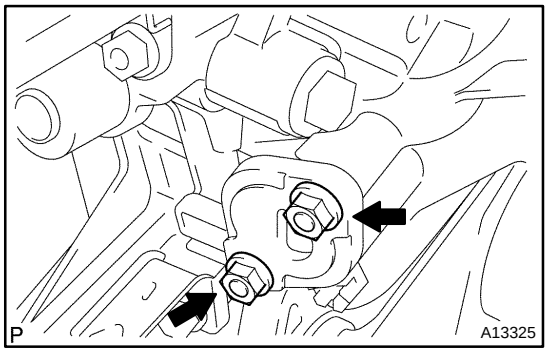

10. REMOVE CHAIN TENSIONER ASSY NO.1

(a) Remove the 2 nuts, chain tensioner and gasket.

NOTICE:

Do not to turn the crankshaft without the chain tensioner.

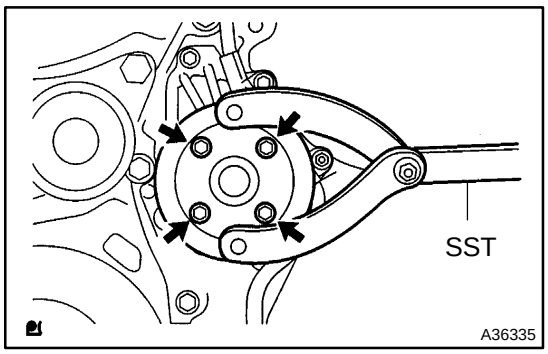

11. REMOVE WATER PUMP PULLEY

(a) Using SST, remove the water pump pulley.
SST 09960−10010 (09962−01000, 09963−00700)

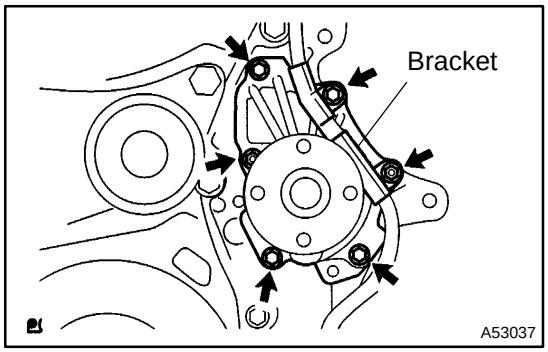

12. REMOVE WATER PUMP ASSY

(a) Remove the 4 bolts, 2 nuts, bracket and water pump.

13. REMOVE OIL PAN DRAIN PLUG

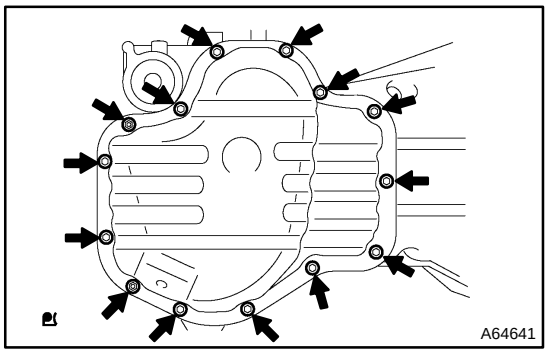

14. REMOVE OIL PAN SUB−ASSY

(a) Remove the 12 bolts and 2 nuts.

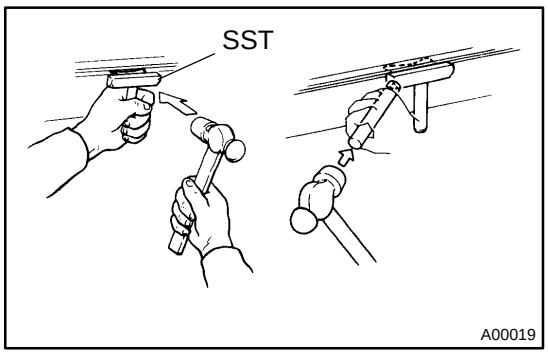

(b) Insert the blade of SST between the crankcase and oil pan. Cut off applied sealer and remove the oil pan.
SST 09032−00100

NOTICE:
Be careful not to damage the contact surface of the cylinder block and oil pan.

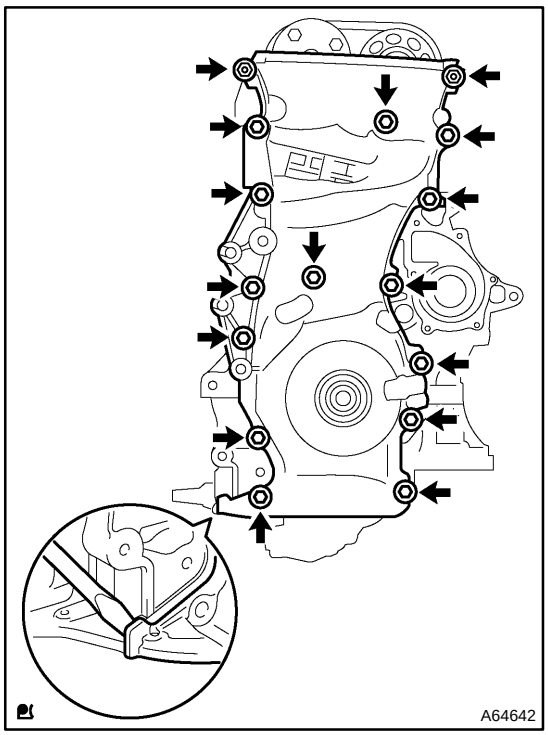

15. REMOVE TIMING CHAIN OR BELT COVER SUB−ASSY

(a) Remove the 14 bolts and 2 nuts.

(b) Remove the timing chain cover by prying between the timing chain cover and cylinder head or cylinder block with a screwdriver.

NOTICE:

Be careful not to damage the contact surfaces of the timing chain cover, cylinder block and cylinder head.

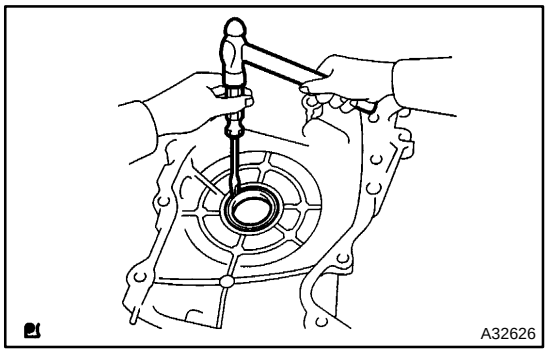

16. REMOVE TIMING GEAR CASE OR TIMING CHAIN CASE OIL SEAL

(a) Using a screwdriver and a hammer, remove the oil seal.

17. REMOVE CRANKSHAFT POSITION SENSOR PLATE NO.1

18. REMOVE TIMING CHAIN GUIDE

19. REMOVE CHAIN TENSIONER SLIPPER

20. REMOVE CHAIN VIBRATION DAMPER NO.1

21. REMOVE CHAIN SUB−ASSY

22. REMOVE CRANKSHAFT TIMING GEAR OR SPROCKET

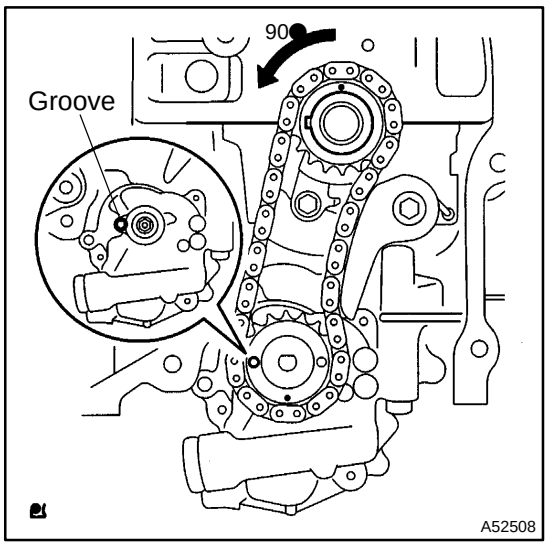

23. REMOVE NO.2 CHAIN SUB−ASSY

(a) Turn the crankshaft counterclockwise by 90° and align the adjusting hole of the oil pump driven sprocket with the groove of the oil pump.

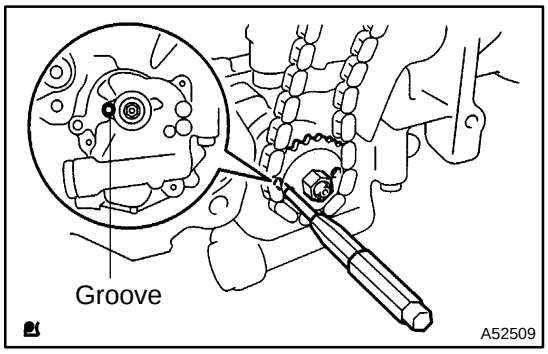

(b) Put a bar (ϕ 4 mm) in the adjusting hole of the oil pump driven sprocket to temporarily lock the sprocket in position. Remove the nut.

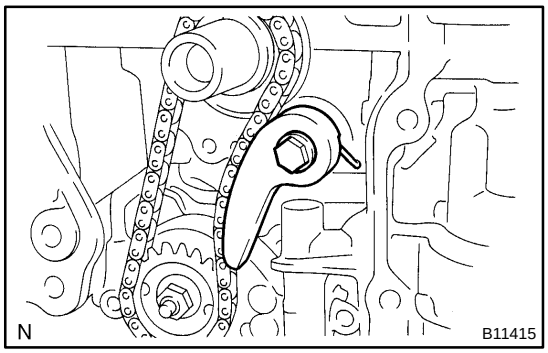

(c) Remove the bolt, chain tensioner plate and spring.

(d) Remove the oil pump drive sprocket, oil pump driven sprocket and chain.

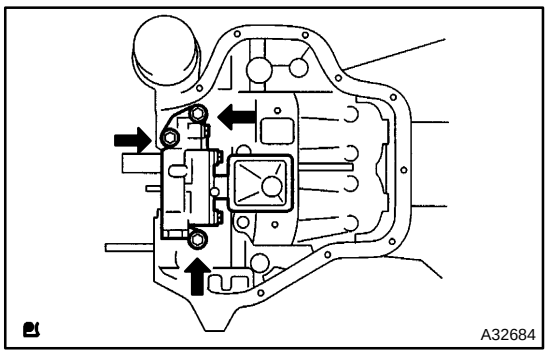

24. REMOVE OIL PUMP ASSY

(a) Remove the 3 bolts, oil pump and gasket.

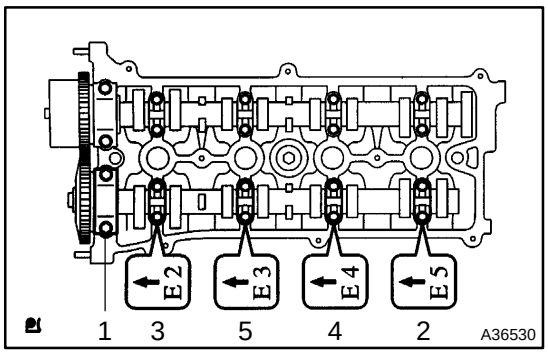

25. REMOVE NO.2 CAMSHAFT

(a) Uniformly loosen and remove the No. 2 camshaft's 10 bearing cap bolts in the sequence shown in the illustration. Then remove the 5 bearings.

(b) Remove the camshaft.

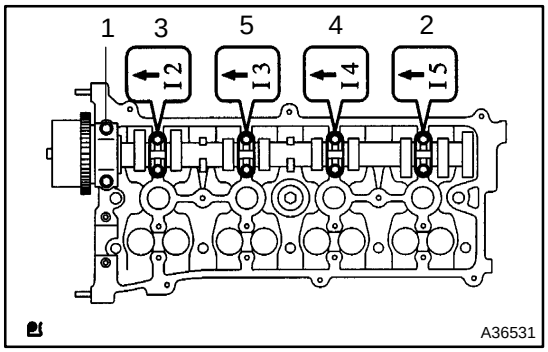

26. REMOVE CAMSHAFT

(a) Uniformly loosen and remove the No. 2 camshaft's 10 bearing cap bolts in the sequence shown in the illustration. Then remove the 5 bearings.

(b) Remove the camshaft.

27. REMOVE CAMSHAFT BEARING NO.1

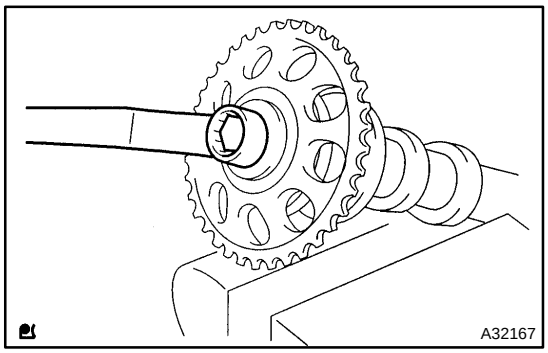

28. REMOVE CAMSHAFT TIMING GEAR OR SPROCKET

(a) Fix the camshaft with a vise and remove the camshaft timing sprocket.

NOTICE:

Be careful not to damage the camshaft.

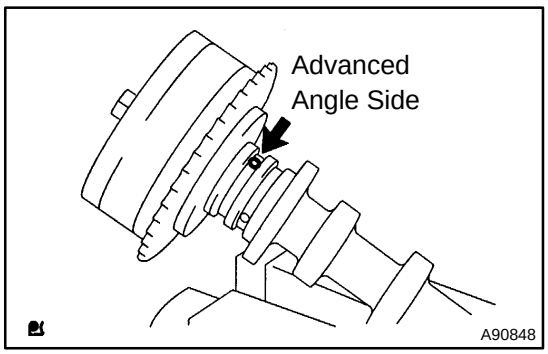

29. REMOVE CAMSHAFT TIMING GEAR ASSY

(a) Fix the camshaft with a vise, and make sure that the camshaft timing gear does not move.

(b) Cover all the oil ports with vinyl tape except the advanced angle side, as shown in the illustration.

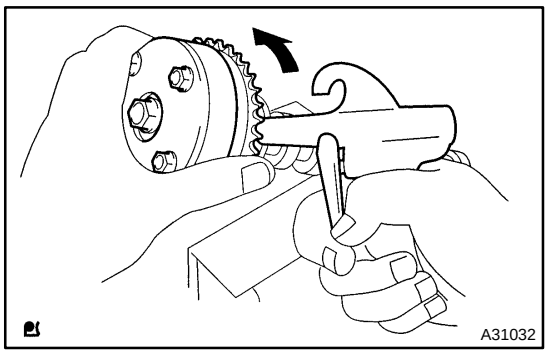

(c) Using an air gun, apply about 150 kPA (1.5 kgf/cm, 21 psi) of air pressure to the port on the advanced angle side.

CAUTION:

Some oil spraying will occur. Contain the spray with a shop rag.

HINT:

This operation releases the lock pin for the extreme retarded angle lock.

(d) Under the condition above, check that the camshaft timing gear can be turned by hand to the advanced angle side (counterclockwise), the direction of the arrow in the illustration.

Standard: Must turn

HINT:

The camshaft timing gear will turn to the advanced angle side without applying force by hand depending on the force of the air pressure applied. Also, if applying pressure to the oil path is difficult as a result of air leakage from the port, the lock−pin may be difficult to release.

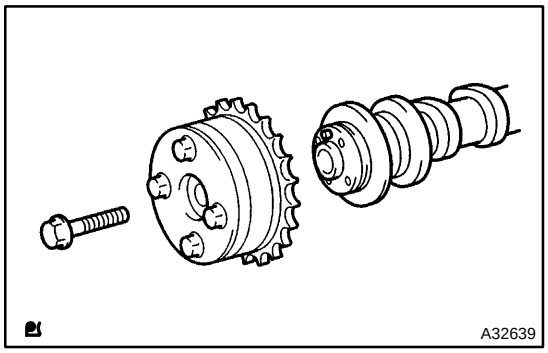

(e) Remove the fringe bolt from the camshaft timing gear.

NOTICE:

- **Be sure not to remove the other 4 bolts.**
- **If planning to reuse the camshaft timing gear, release the straight pin lock first, and then install the gear.**

30. REMOVE CAMSHAFT BEARING NO.2

31. REMOVE CAMSHAFT TIMING OIL CONTROL VALVE ASSY

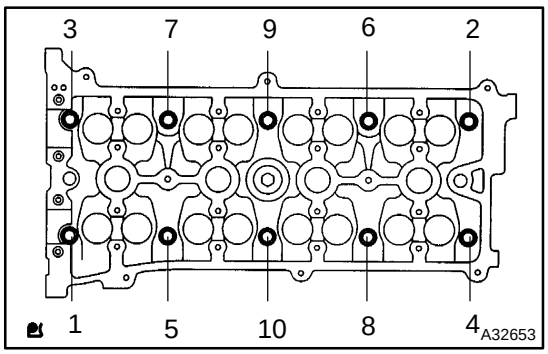

32. REMOVE CYLINDER HEAD SUB−ASSY

(a) Using a 10 mm bi−hexagon wrench, uniformly loosen the 10 bolts in the sequence shown in the illustration. Remove the 10 cylinder head bolts and plate washers.

NOTICE:

- **Be careful not to drop washers into the cylinder head.**
- **Head warpage or cracking could result from removing bolts in an incorrect order.**

33. REMOVE CYLINDER HEAD GASKET

34. REMOVE CYLINDER BLOCK WATER DRAIN COCK SUB−ASSY

35. REMOVE OIL CONTROL VALVE FILTER

(a) Using a 6 mm socket hexagon wrench, remove the plug and filter.

36. REMOVE W/HEAD TAPER SCREW PLUG NO.1

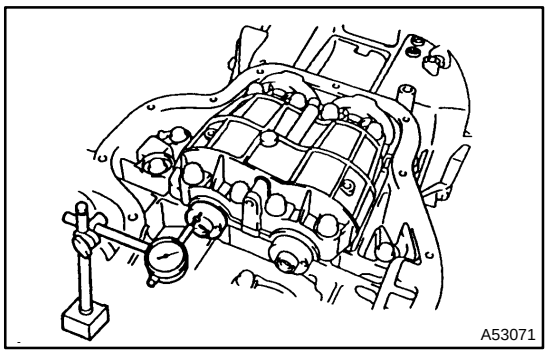

37. INSPECT BALANCESHAFT THRUST CLEARANCE

(a) Using a dial indicator, measure the thrust clearance while moving the balance shaft back and forth.

Specified thrust clearance:
0.050 to 0.090 mm (0.0020 to 0.0035 in.)

If the thrust clearance is greater than the maximum, replace the balance shaft housing and bearings. If necessary, replace the balance shaft.

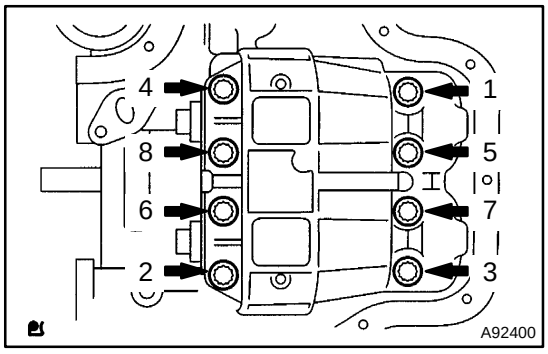

38. INSPECT BALANCESHAFT OIL CLEARANCE

(a) Uniformly loosen and remove the 8 bolts in the sequence shown in the illustration.

NOTICE:

Be careful not to damage the contact surfaces of the balance shaft housing and crankcase.

HINT:

Keep the lower bearing and balance shaft housing together.

(b) Lift out the No. 1 and No. 2 balance shafts.

HINT:

Keep the upper bearing with the crankcase.

(c) Clean each bearing and journal.

(d) Check each bearing and journal for pitting and scratches.

If a bearing or journal is damaged, replace the bearings. If necessary, replace the balance shaft.

(e) Place the No. 1 and No. 2 balance shafts on the crankcase.

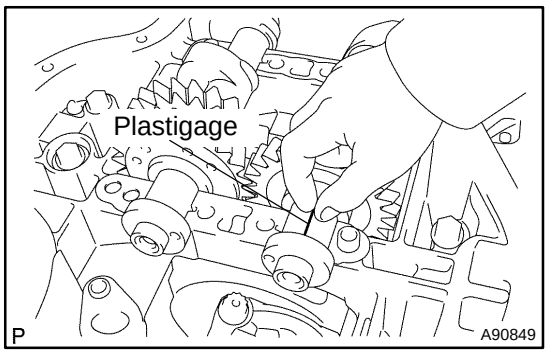

(f) Lay a strip of Plastigage across each journal, and install the balance shaft housing.

(g) Apply light coat of engine oil on the threads and under the heads of the balance shaft housing bolts.

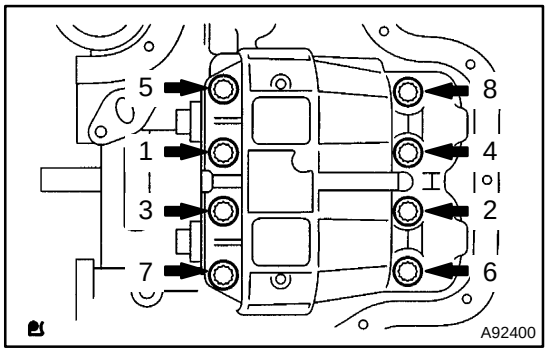

(h) Uniformly tighten the 8 bolts in the sequence shown in the illustration.

Torque: 22 N·m (220 kgf·cm, 16 ft·lbf)

HINT:

The balance shaft housing bolts are tightened in 2 progressive steps.

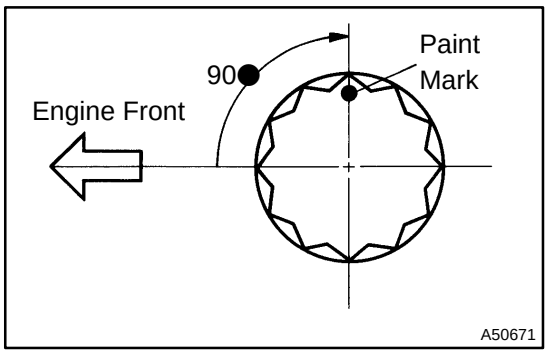

(i) Mark the front side of each balance shaft housing bolt head with paint.
(j) Retighten the bolts by 90● as shown in the illustration.
(k) Check that the paint marks are now at a 90● angle to the front.

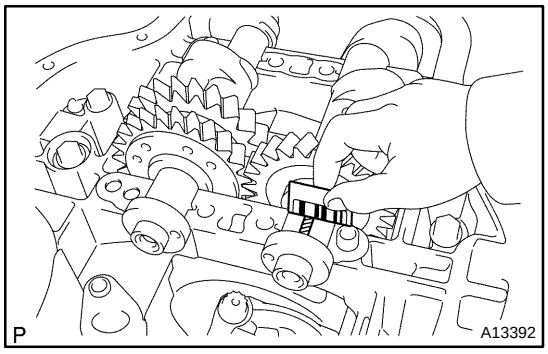

(l) Remove the balance shaft housing, and measure the Plastigage at its widest point.
Specified oil clearance:
0.004 to 0.031 mm (0.0002 to 0.0012 in.)
(m) Completely remove the plastigage after the inspection.
If the clearance is greater than the maximum, replace the bearing. If necessary, replace the balance shaft.

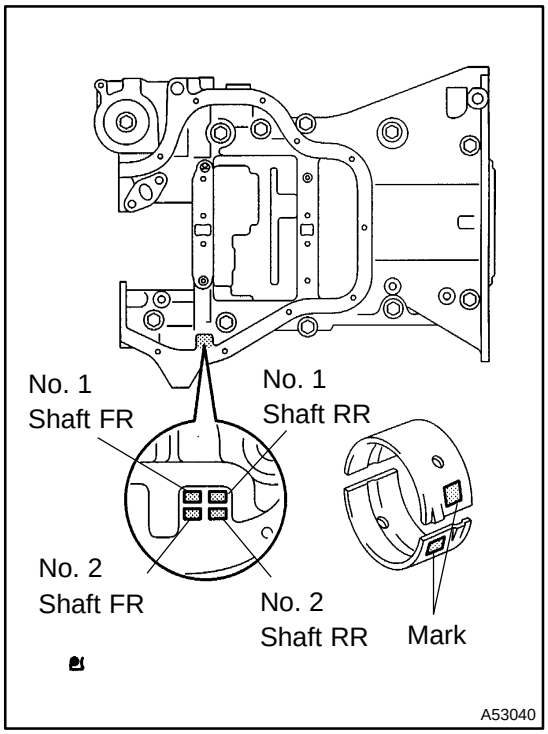

HINT:
If replacing a bearing, replace it with one that has the same number as the stiffening crankcase. There are 3 sizes of standard bearings: 1, 2 and 3.

Balance shaft housing journal bore diameter:

Mark 1	26.000 to 26.006 mm (1.0236 to 1.0239 in.)
Mark 2	26.006 to 26.012 mm (1.0239 to 1.0241 in.)
Mark 3	26.012 to 26.018 mm (1.0241 to 1.0243 in.)

Balance shaft journal diameter:
22.985 to 23.000 mm (0.9049 to 0.9055 in.)
Standard bearing center wall thickness:

Mark 1	1.486 to 1.489 mm (0.0585 to 0.0586 in.)
Mark 2	1.489 to 1.492 mm (0.0586 to 0.0587 in.)
Mark 3	1.492 to 1.495 mm (0.0587 to 0.0589 in.)

(n) Completely remove the Plastigage after the inspection.

39. REMOVE BALANCESHAFT

40. REMOVE BALANCESHAFT BEARING NO. 1

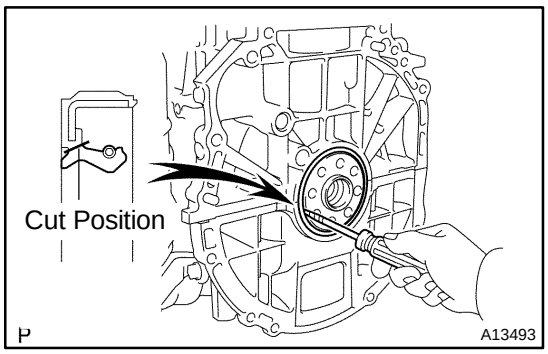

41. REMOVE ENGINE REAR OIL SEAL

(a) Using a knife, cut off the oil seal lip.

(b) Using a screwdriver with its tip taped, pry out the oil seal.

NOTICE:

After the removal, check the crankshaft for damage. If it is damaged, smooth the surface with 400−grit sandpaper.

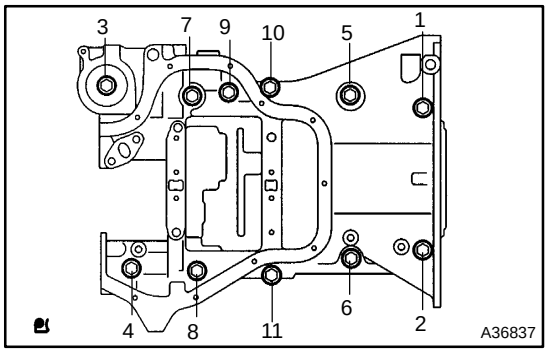

42. REMOVE STIFFENING CRANKCASE ASSY

(a) Uniformly loosen and remove the 11 bolts in the sequence shown in the illustration.

(b) Using a screwdriver, remove the crankcase by prying the portions between the crankcase and cylinder block.

NOTICE:

Be careful not to damage the contact surfaces of the crankcase and cylinder block.

(c) Remove the O−ring from the cylinder block.

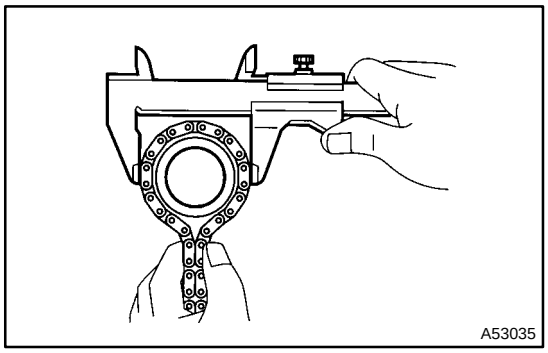

43. INSPECT OIL PUMP DRIVE SPROCKET

(a) Wrap the chain around the drive sprocket.

(b) Using a vernier caliper, measure the drive sprocket diameter with the chain.

NOTICE:

The vernier caliper must contact the chain rollers for the measurement.

Minimum sprocket diameter (w/ chain):
48.2 mm (1.898 in.)

If the diameter is less than the minimum, replace the chain and sprocket.

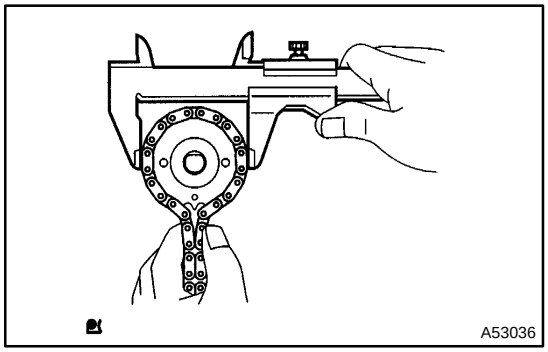

44. INSPECT OIL PUMP DRIVEN SPROCKET

(a) Wrap the chain around the driven sprocket.

(b) Using a vernier caliper, measure the driven sprocket diameter with the chain.

NOTICE:

The vernier caliper must contact the chain rollers for the measurement.

Minimum sprocket diameter (w/ chain):
48.2 mm (1.898 in.)

If the diameter is less than the minimum, replace the chain and drive shaft gear.

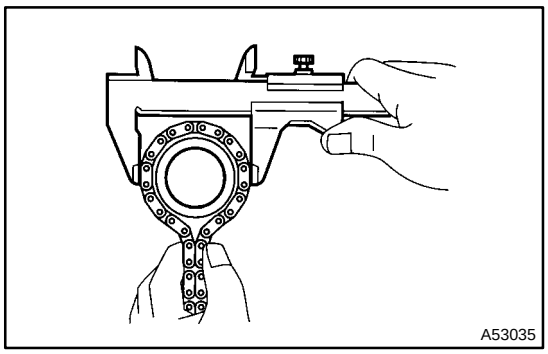

45. INSPECT CRANKSHAFT TIMING GEAR OR SPROCKET

(a) Wrap the chain around the timing sprocket.

(b) Using a vernier caliper, measure the timing sprocket diameter with the chain.

NOTICE:

The vernier caliper must contact the chain rollers for the measurement.

Minimum sprocket diameter (w/ chain):
51.6 mm (2.031 in.)

If the diameter is less than the minimum, replace the chain and timing gear.

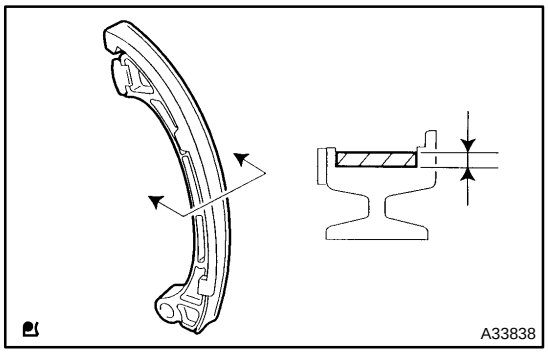

46. INSPECT CHAIN TENSIONER SLIPPER

(a) Measure the tensioner slipper wear.

Maximum wear: 1.0 mm (0.039 in.)

If the wear is greater than the maximum, replace the tensioner slipper.

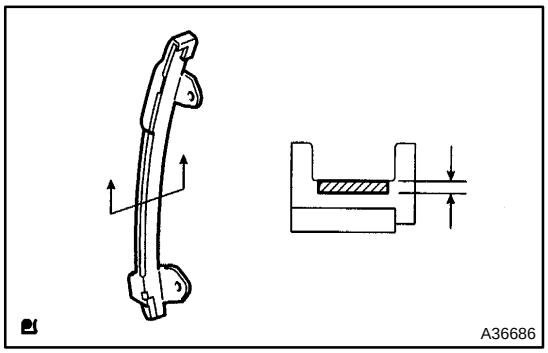

47. INSPECT CHAIN VIBRATION DAMPER NO.1

(a) Measure the vibration damper wear.

Maximum wear: 1.0 mm (0.039 in.)

If the wear is greater than the maximum, replace the vibration damper.

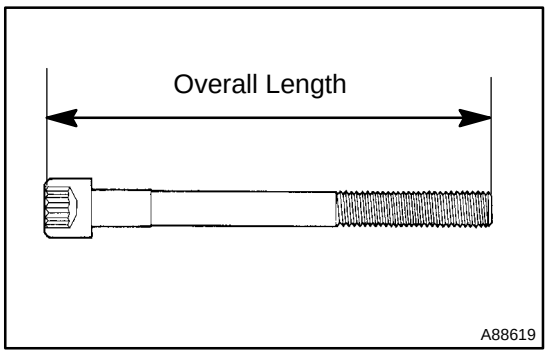

48. INSPECT CYLINDER HEAD SET BOLT

(a) Using a vernier caliper, measure the length of the head bolts from the seat to the end.

Specified bolt length:
161.3 to 164.2 mm (6.350 to 6.465 in.)

If the length is greater than the maximum, replace the bolt.

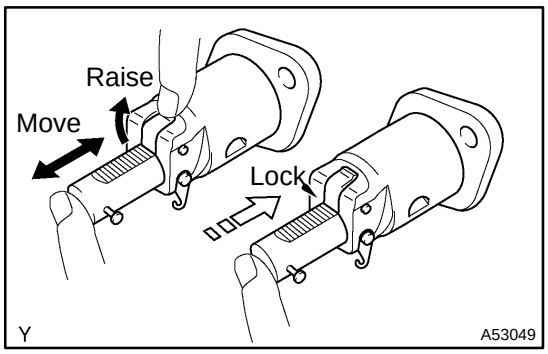

49. INSPECT CHAIN TENSIONER ASSY NO.1

(a) Check that the plunger moves smoothly when the ratchet pawl is raised.

(b) Release the ratchet pawl and check that the plunger is locked in place by the ratchet pawl and does not move when pushed with finger.

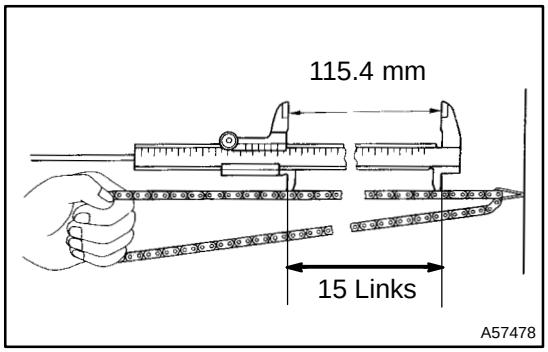

50. INSPECT CHAIN SUB−ASSY

(a) Using a vernier caliper, measure the length of 15 links with the chain fully stretched.

Maximum chain elongation: 115.4 mm (4.543 in.)

If the elongation is greater than the maximum, replace the chain.

NOTICE:

Make the same measurements pulling at 3 or more places selected at random. Average the measurements.

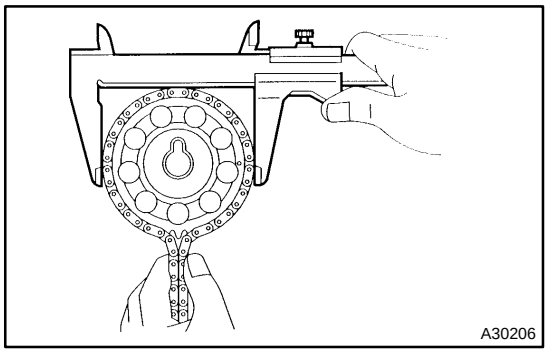

51. INSPECT CAMSHAFT TIMING GEAR OR SPROCKET

(a) Wrap the chain around the timing sprocket.

(b) Using a vernier caliper, measure the timing sprocket diameter with the chain.

Minimum sprocket diameter (w/chain): 97.3 mm (3.831 in.)

NOTICE:

The vernier caliper must contact the chain rollers for the measurement.

If the diameter is less than the minimum, replace the chain and timing gear.

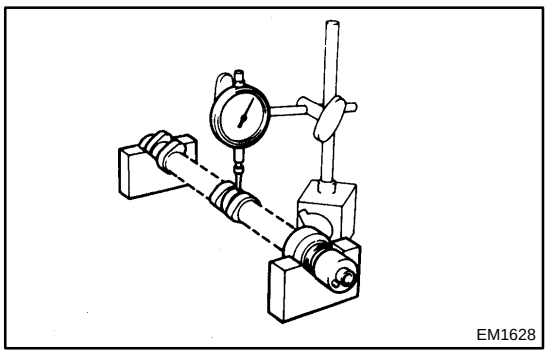

52. INSPECT CAMSHAFT

(a) Check the camshaft for runout.

(1) Place the camshaft on V−blocks.

(2) Using a dial indicator, measure the circle runout at the center journal.

Maximum circle runout: 0.03 mm (0.0012 in.)

If the circle runout is greater than the maximum, replace the camshaft.

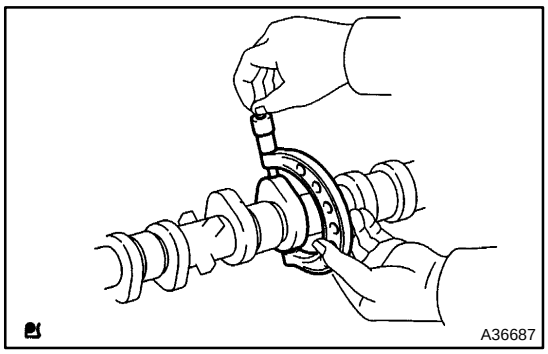

(b) Using a micrometer, measure the cam lobe height.
Specified cam lobe height:
46.599 to 46.809 mm (1.8346 to 1.8429 in.)
If the cam lobe height is less than the minimum, replace the camshaft.

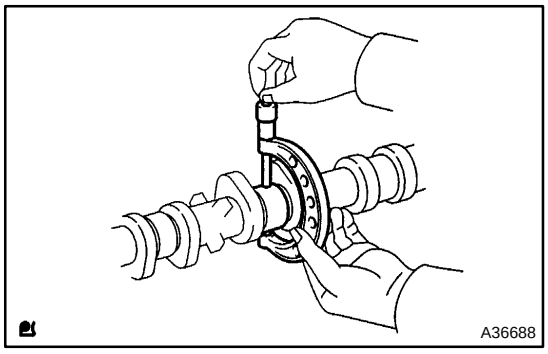

(c) Using a micrometer, measure the journal diameter.
No. 1 journal diameter:
35.971 to 35.985 mm (1.4162 to 1.4167 in.)
Other journal diameter:
22.959 to 22.975 mm (0.9039 to 0.9045 in.)
If the journal diameter is not as specified, check the oil clearance.

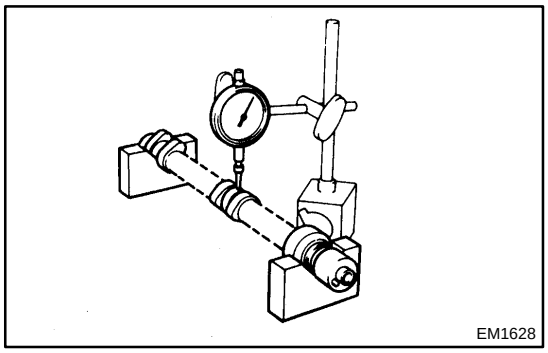

53. INSPECT NO.2 CAMSHAFT
(a) Check the camshaft for runout.
(1) Place the camshaft on V−blocks.
(2) Using a dial indicator, measure the circle runout at the center journal.
Maximum circle runout: 0.03 mm (0.0012 in.)
If the circle runout is greater than the maximum, replace the camshaft.

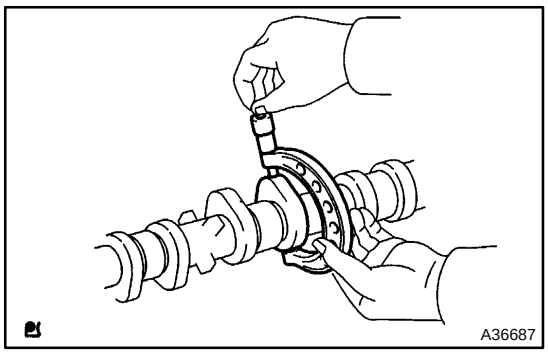

(b) Using a micrometer, measure the cam lobe height.
Specified cam lobe height:
45.599 to 46.809 mm (1.8346 to 1.8429 in.)
If the cam lobe height is less than the minimum, replace the camshaft.

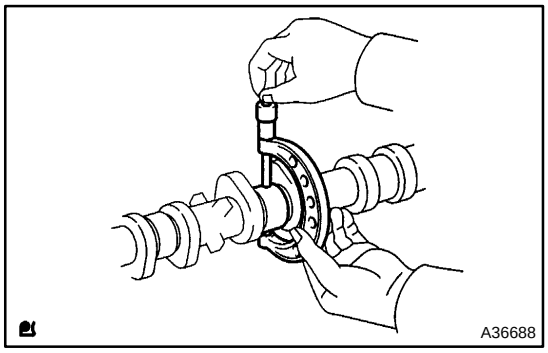

(c) Using a micrometer, measure the journal diameter.
No. 1 journal diameter:
35.971 to 35.985 mm (1.4162 to 1.4167 in.)
Other journal diameter:
22.959 to 22.975 mm (0.9039 to 0.9045 in.)
If the journal diameter is not as specified, check the oil clearance.

54. INSTALL BALANCESHAFT BEARING NO.1

(a) Install the bearings in the crankcase and balance shaft housing.

(b) Apply a light coat of engine oil on the bearings.

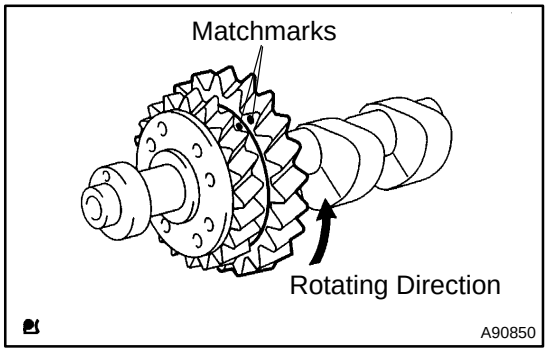

55. INSTALL BALANCESHAFT NO. 1 AND NO. 2

(a) Rotate the driven gear No. 1 of balance shaft No. 1 for the rotating direction until it hits the stopper.

(b) Confirm that the matchmarks on driven gear No. 1 and No. 2 are matched.

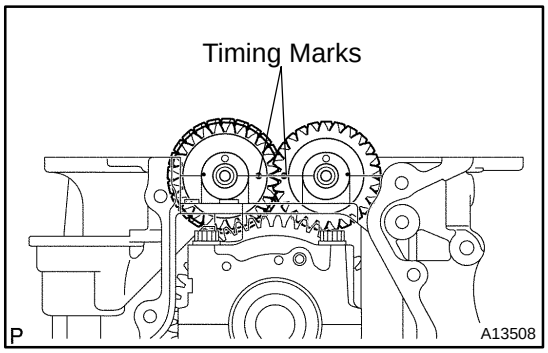

(c) Align the timing marks of the No. 1 and No. 2 balance shafts as shown in the illustration.

(d) Place the No. 1 and No. 2 balance shafts on the crank case.

(e) Apply a light coat of engine oil under the heads of the balance shaft housing bolts.

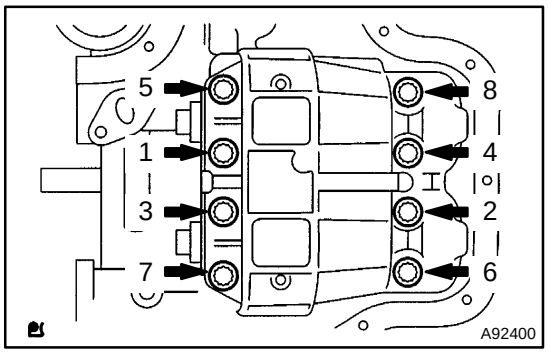

(f) Uniformly tighten the 8 bolts in the sequence shown in the illustration.

Torque: 22 N·m (220 kgf·cm, 16 ft·lbf)

HINT:

The balance shaft housing bolts are tightened in 2 progressive steps.

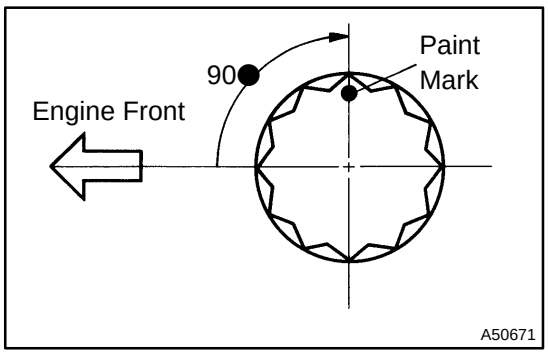

(g) Mark the front side of each balance shaft housing bolt head with paint.

(h) Retighten the bolts by 90●as shown in the illustration.

(i) Check that the painted marks are now at a 90●angle to the front.

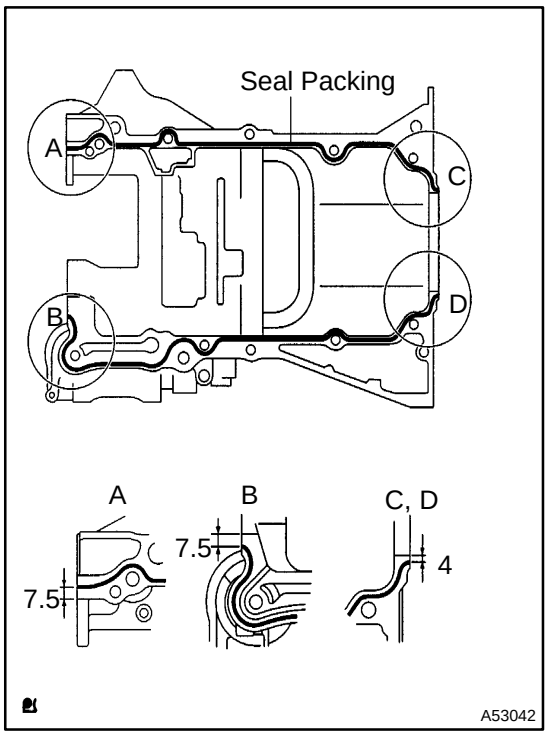

56. INSTALL STIFFENING CRANKCASE ASSY

(a) Apply seal packing in a continuous bead (diameter: 2.5 to 3 mm (0.098 to 0.118 in.)) to the places shown in the illustration.

Seal packing: Part No. 08826−00080 or equivalent

NOTICE:

- **Remove any oil from the contact surface.**
- **Install the crankcase within 3 minutes after applying seal packing.**
- **Do not start the engine for at least 2 hours after installing.**

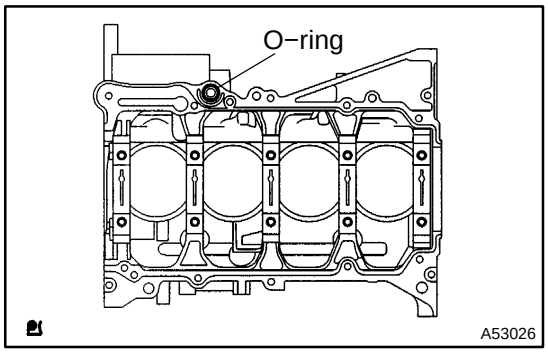

(b) Place a new O−ring on the cylinder block, as shown in the illustration.

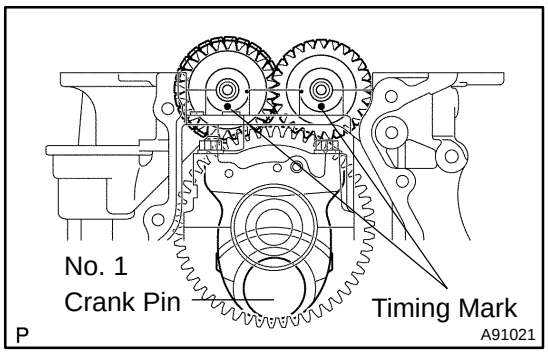

(c) With the No. 1 crank pin of the crankshaft placed at 6 o'clock, install the No. 1 and No. 2 balanceshaft and the adjusting hole as shown in the illustration.

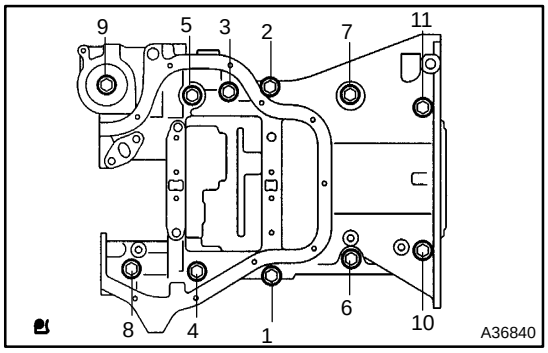

(d) Uniformly tighten the 11 bolts in the sequence shown in the illustration.

Torque: 33 N·m (332 kgf·cm, 24 ft·lbf)

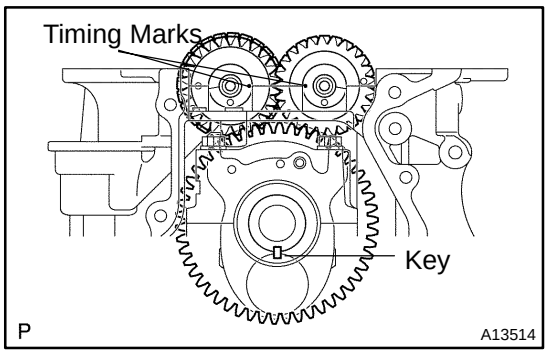

(e) Confirm that the timing marks of the balanceshafts are matched when the key groove is placed at 6 o'clock, as shown in the illustration.

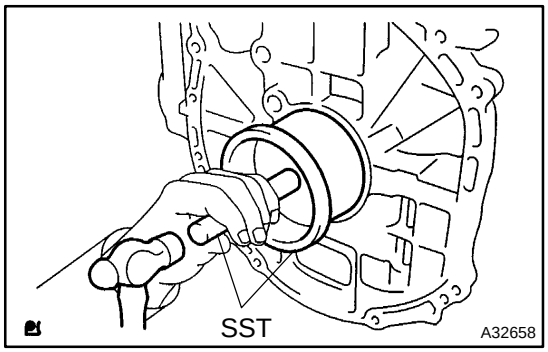

57. INSTALL ENGINE REAR OIL SEAL

(a) Apply MP grease to a new oil seal lip.

NOTICE:

Keep the lip off the foreign materials.

(b) Using SST and a hammer, evenly tap the oil seal until its surface is flush with the rear oil seal retainer edge.
SST 09223−15030, 09950−70010 (09951−07100)

NOTICE:

Wipe off extra grease on the crankshaft.

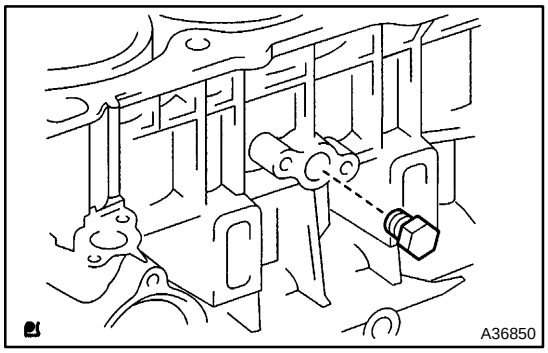

58. INSTALL W/HEAD TAPER SCREW PLUG NO.1

(a) Apply adhesive to the threads of the plug and install it.
Adhesive:
Part No. 08833−00070, THREE BOND 1324 or equivalent
Torque: 26 N·m (265 kgf·cm, 19 ft·lbf)

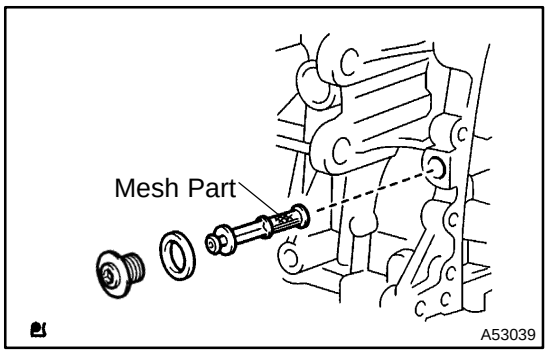

59. INSTALL OIL CONTROL VALVE FILTER

(a) Check that no foreign substance is on the mesh part of the filter.

(b) Using a 6 mm socket hexagon wrench, install a new gasket and the oil control valve filter with the screw plug.
Torque: 30 N·m (306 kgf·cm, 22 ft·lbf)

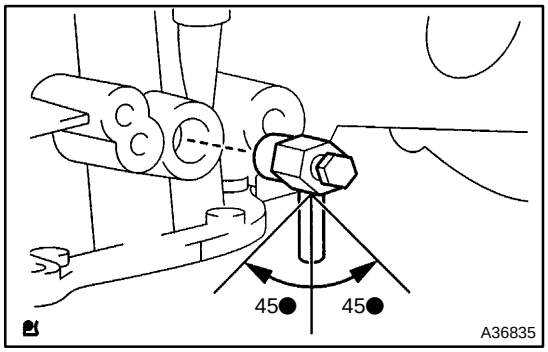

60. INSTALL CYLINDER BLOCK WATER DRAIN COCK SUB−ASSY

(a) Install the water drain cock within the range shown in the illustration.
Torque: 25 N·m (255 kgf·cm, 18 ft·lbf)

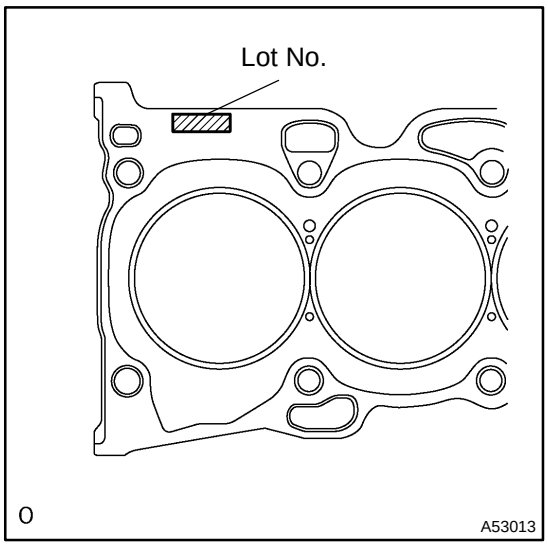

61. INSTALL CYLINDER HEAD GASKET

(a) Place a new gasket on the cylinder block surface with the Lot No. stamp upward.

NOTICE:

- **Remove any oil from contact surface.**
- **Be careful of the installation direction.**
- **To avoid damage to the gasket, place the cylinder head on the gasket carefully.**

62. INSTALL CYLINDER HEAD SUB−ASSY

HINT:

The cylinder head bolts are tightened in 2 progressive steps.

(a) Apply a light coat of engine oil on the threads and under the heads of the cylinder head bolts.

(b) Install the 10 bolts and plate washers to the cylinder head.

NOTICE:

Do not drop the washers into the cylinder head.

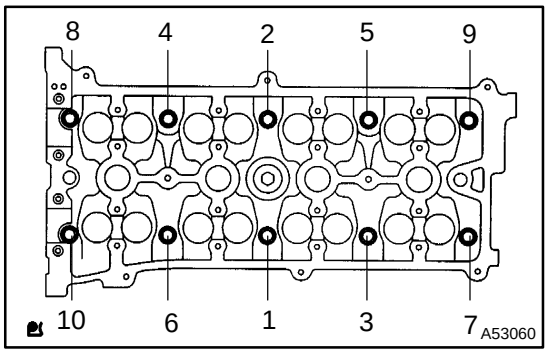

(c) Using a 10 mm bi−hexagon wrench, uniformly tighten the 10 bolts in the sequence shown in the illustration.
Torque: 79 N·m (806 kgf·cm, 58 ft·lbf)

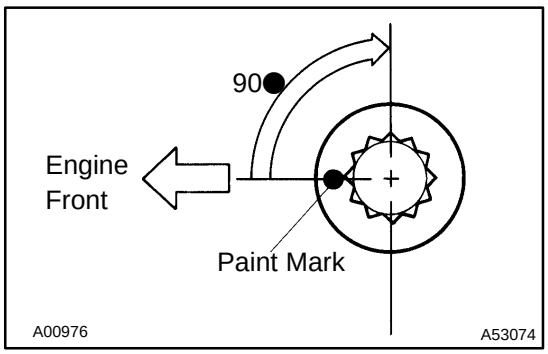

(d) Mark the front side of each cylinder head bolt with paint.

(e) Retighten the cylinder head bolts by 90° in the sequence shown in the illustration.

(f) Check that the painted marks are now at a 90° angle to the front.

63. INSTALL CAMSHAFT TIMING OIL CONTROL VALVE ASSY
Torque: 9.0 N·m (92 kgf·cm, 80 in.·lbf)

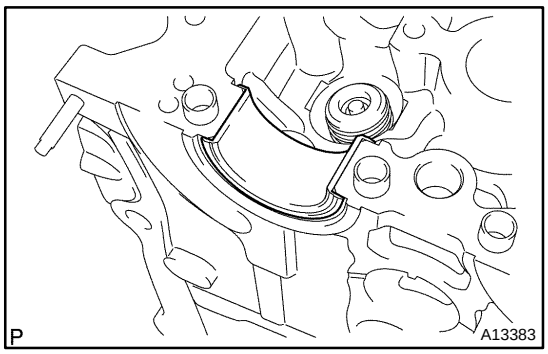

64. INSTALL CAMSHAFT BEARING NO.2

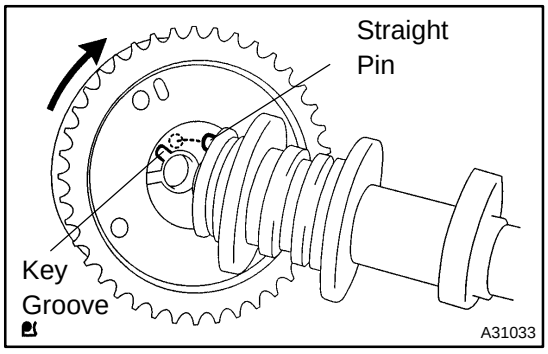

65. INSTALL CAMSHAFT TIMING GEAR ASSY

(a) Put the camshaft timing gear and the camshaft together with the straight pin and key groove.

(b) Turn the camshaft timing gear (as shown in the illustration) while pushing it lightly against the camshaft. Push further at the position where the pin enters the groove.

CAUTION:

Be sure not to turn the camshaft timing gear to the retarded angle side (to the right angle).

(c) Check that there is no clearance between the gear's fringe and the camshaft.

(d) Tighten the fringe bolt with the camshaft timing gear fixed.
Torque: 54 N·m (551 kgf·cm, 40 ft·lbf)

(e) Check that the camshaft timing gear can move to the retarded angle side (the right direction) and is locked at the extreme retarded angle position.

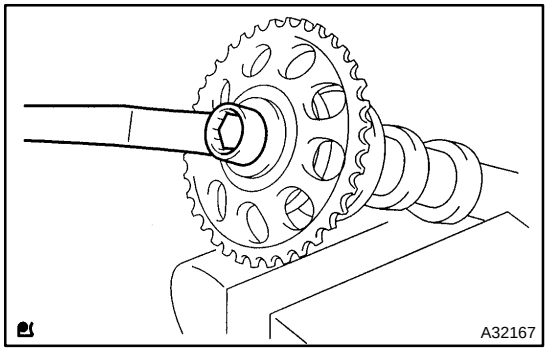

66. INSTALL CAMSHAFT TIMING GEAR OR SPROCKET

(a) Fix the camshaft with a vise, and install the camshaft No. 2 timing gear.
Torque: 54 N·m (551 kgf·cm, 40 ft·lbf)

67. INSTALL CAMSHAFT BEARING NO.1

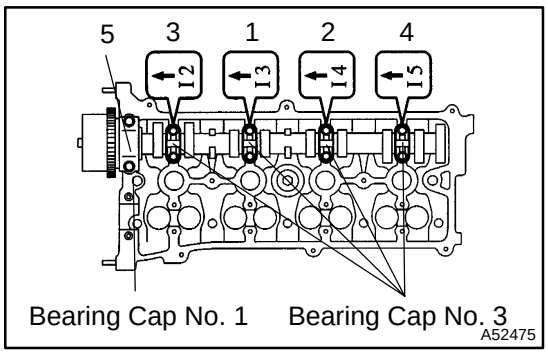

68. INSTALL CAMSHAFT

(a) Examine the front marks and numbers of the 5 bearing caps and install them. Then install the 10 bearing cap bolts. Uniformly tighten the bolts in the sequence shown in the illustration.

Torque:
30 N·m (301 kgf·cm, 22 ft·lbf) for bearing cap No. 1
9.0 N·m (92 kgf·cm, 80 in.·lbf) for bearing cap No. 3

NOTICE:

- **Tighten the bolts after deciding the position for the thrust direction of the camshaft by the bearing cap No. 1.**
- **Install the camshaft with its timing mark of the camshaft timing gear on top.**

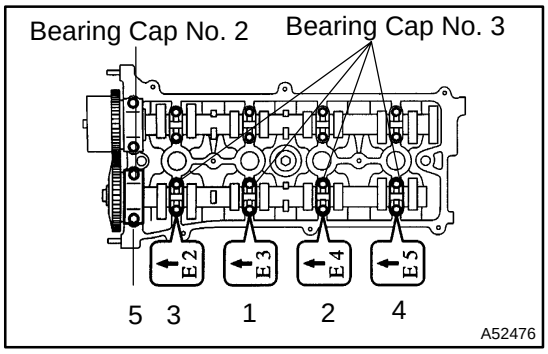

69. INSTALL NO.2 CAMSHAFT

(a) Examine the front marks and numbers of the 5 bearing caps and install them. Then install the 10 bearing cap bolts. Uniformly tighten the bolts in the sequence shown in the illustration.

Torque:
30 N·m (301 kgf·cm, 22 ft·lbf) for bearing cap No. 2
9.0 N·m (92 kgf·cm, 80 in.·lbf) for bearing cap No. 3

NOTICE:

- **Tighten the bolts after deciding the position for the thrust direction of the camshaft by the bearing cap No. 2.**
- **Install the camshaft with its timing mark of the camshaft timing gear on top.**

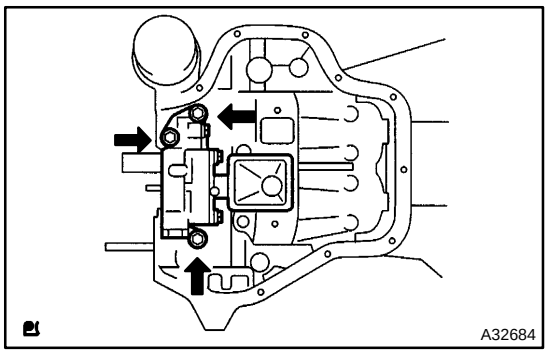

70. INSTALL OIL PUMP ASSY

(a) Install a new gasket and oil pump with the 3 bolts.
Torque: 19 N·m (194 kgf·cm, 14 ft·lbf)

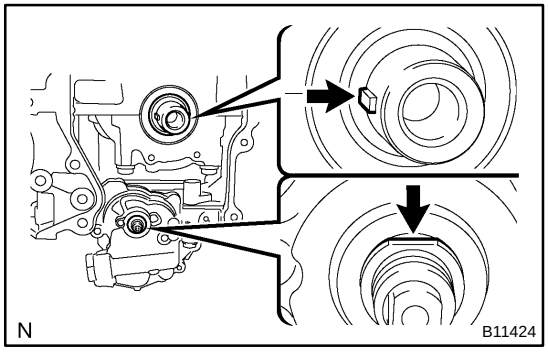

71. INSTALL NO.2 CHAIN SUB−ASSY

(a) Set the crankshaft key into the left horizontal position.
(b) Turn the cutout of the drive shaft to the top.

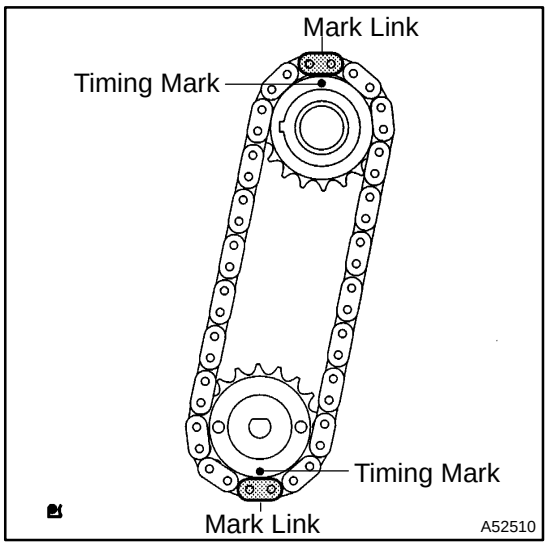

(c) Align the mark links (yellow colored links) with the timing marks of the sprocket as shown in the illustration.

(d) Insert the sprocket with chain to the crankshaft and oil pump shaft.

(e) Temporarily tighten the oil pump driven sprocket with the nut.

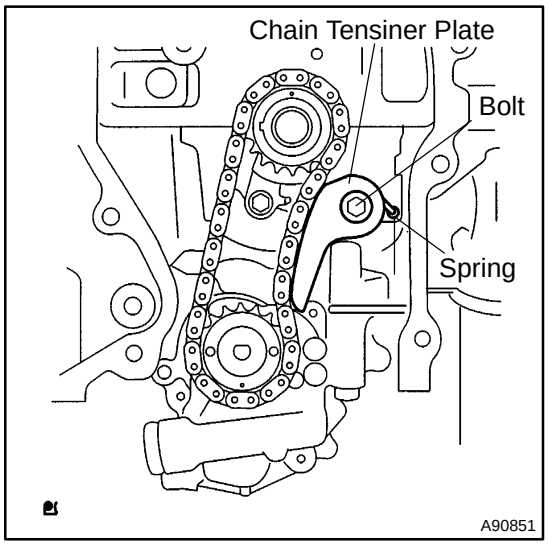

(f) Insert the damper spring into the adjusting hole, and install the chain tensioner plate by the bolt.
Torque: 12 N·m (122 kgf·cm, 9 ft·lbf)

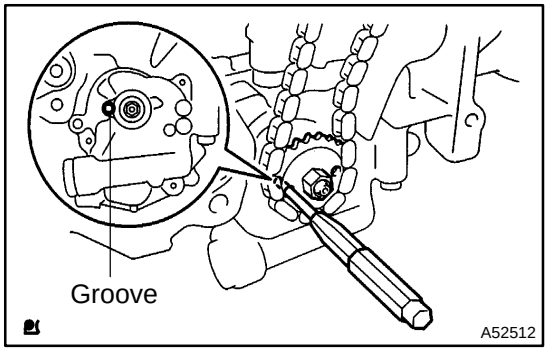

(g) Align the adjusting hole of the sprocket with the groove of the oil pump.

(h) Put a bar (ϕ 4 mm) into the adjusting hole of the sprocket to temporarily lock the sprocket in position. Install the nut.
Torque: 30 N·m (301 kgf·cm, 22 ft·lbf)

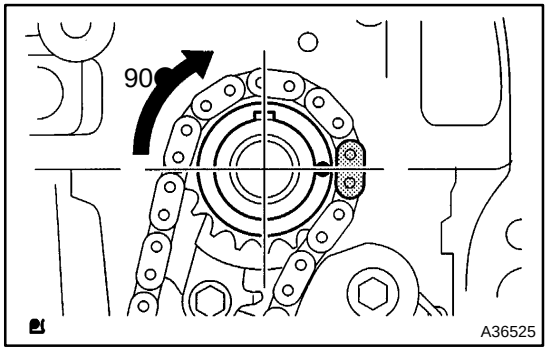

(i) Rotate the crankshaft clockwise by 90● and align the crankshaft key with the top.

72. INSTALL CRANKSHAFT TIMING GEAR OR SPROCKET

73. INSTALL CHAIN VIBRATION DAMPER NO.1

(a) Install the chain vibration damper with the 2 bolts.
Torque: 9.0 N·m (92 kgf·cm, 80 in.·lbf)

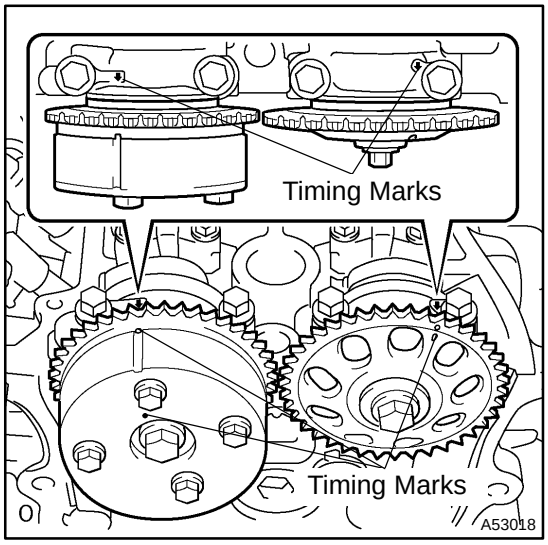

74. INSTALL CHAIN SUB−ASSY

(a) Set the No. 1 cylinder to TDC/compression.
(1) Align the timing marks of the camshaft timing gear/sprocket and bearing caps (No. 1 and No. 2).

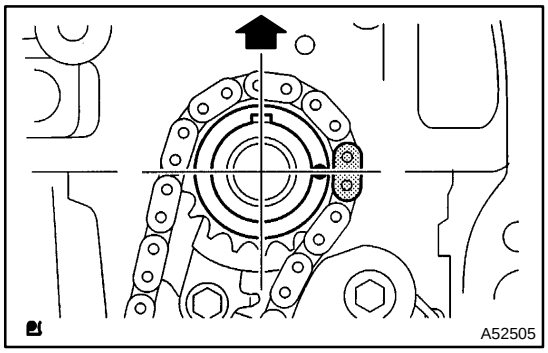

(2) Using the crankshaft pulley bolt, turn the crankshaft and set the set key on the crankshaft upward.

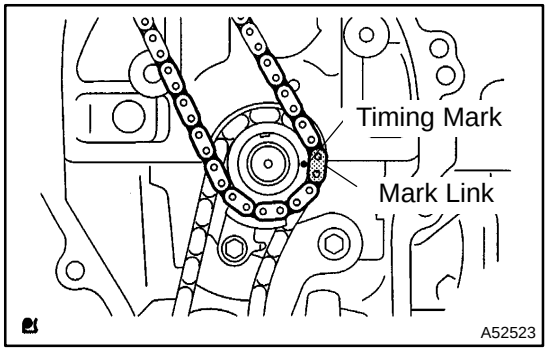

(b) Align the mark link (blue or orange colored link) with the timing mark of the crankshaft timing sprocket.

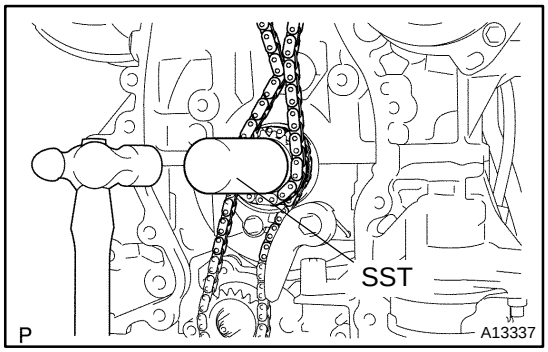

(c) Using SST, tap in the sprocket.
SST 09309−37010

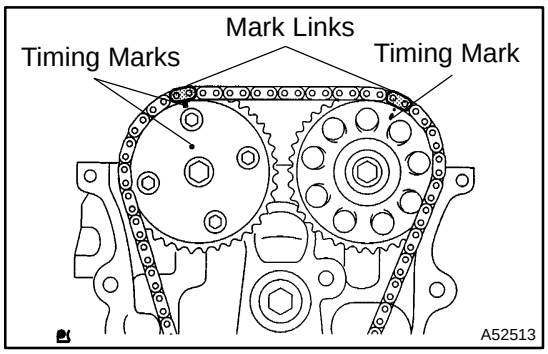

(d) Align the mark links (gold or yellow colored links) with the timing marks of the camshaft timing gear and camshaft timing sprocket, and install the chain.

75. INSTALL CHAIN TENSIONER SLIPPER
Torque: 19 N·m (194 kgf·cm, 14 ft·lbf)

76. INSTALL TIMING CHAIN GUIDE
Torque: 9.0 N·m (92 kgf·cm, 80 in.·lbf)

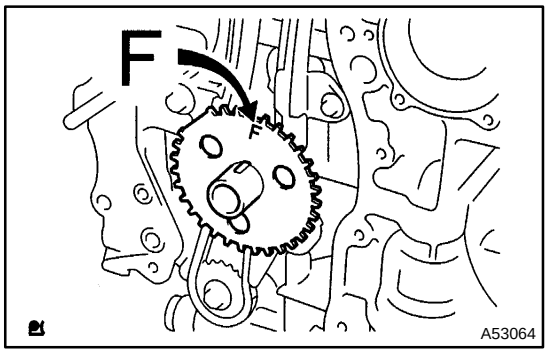

77. INSTALL CRANKSHAFT POSITION SENSOR PLATE NO.1

(a) Install the sensor plate with the F mark facing forward.

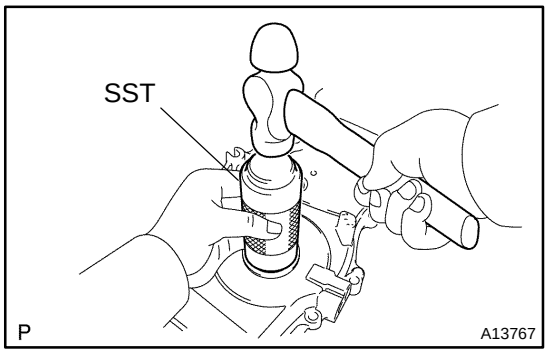

78. INSTALL TIMING GEAR CASE OR TIMING CHAIN CASE OIL SEAL

(a) Using SST, tap in a new oil seal until its surface is flush with the timing chain cover edge.
SST 09223−22010

(b) Apply a light coat of MP grease to the lip of the oil seal.

NOTICE:
Keep the gap between the timing chain cover edge and the oil seal free of foreign matter.

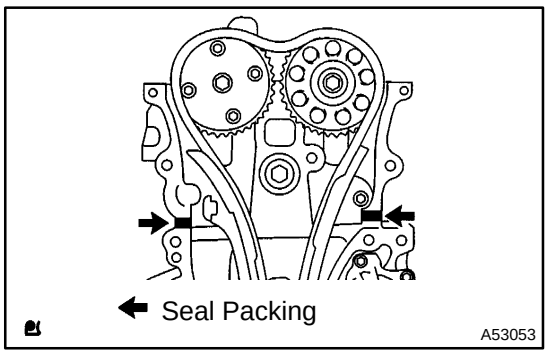

79. INSTALL TIMING CHAIN OR BELT COVER SUB−ASSY

NOTICE:
- **Remove any oil from the contact surface.**
- **Install the chain cover within 3 minutes after applying seal packing.**
- **Do not start the engine for at least 2 hours after installing.**

(a) Remove any old packing (FIPG) material and be careful not to drop any oil on the contact surfaces of the timing chain cover, cylinder head and cylinder block.

(b) Apply seal packing in a continuous bead (diameter: 2 mm (0.09 in.)) as shown in the illustration.
Seal packing: Part No. 08826−00080 or equivalent

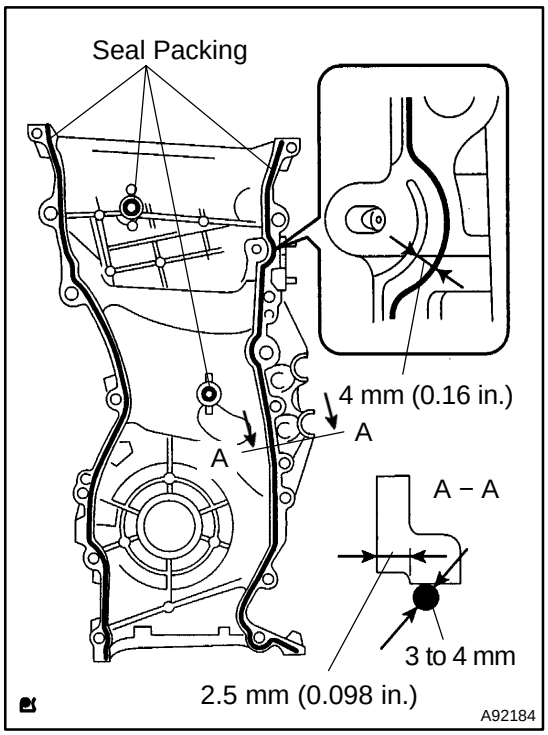

(c) Apply seal packing in a continuous bead (diameter: 3 to 4 mm (0.12 to 0.16 in.)) as shown in the illustration.
Seal packing: Part No. 08826−00080 or equivalent

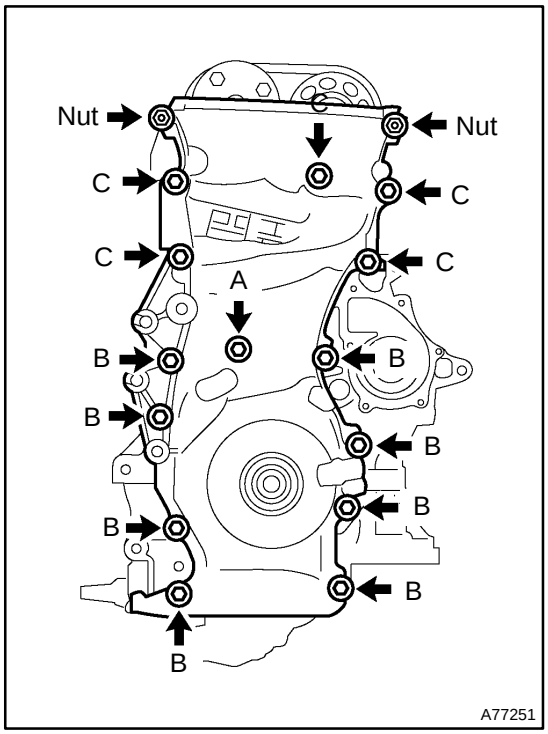

(d) Install the timing chain cover with the 14 bolts and 2 nuts.
Torque:
9.0 N·m (92 kgf·cm, 80 in.·lbf) for bolt A
21 N·m (214 kgf·cm, 15 ft·lbf) for bolt B
43 N·m (438 kgf·cm, 32 ft·lbf) for bolt C
9.0 N·m (92 kgf·cm, 80 in.·lbf) for nut

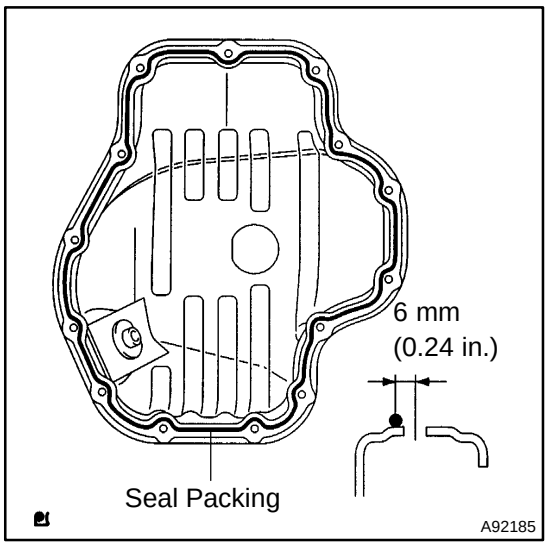

80. INSTALL OIL PAN SUB−ASSY

NOTICE:

- **Remove any oil from the contact surface.**
- **Install the oil pan within 3 minutes after applying seal packing.**
- **Do not start the engine for at least 2 hours after installing.**

(a) Remove any old packing (FIPG) material and be careful not to drop any oil on the contact surfaces of the cylinder block and oil pan.

(b) Apply seal packing in a continuous bead (diameter: 3 mm to 4 mm (0.157 in.)) as shown in the illustration, and install the oil pan.
Seal packing: Part No. 08826−00080 or equivalent

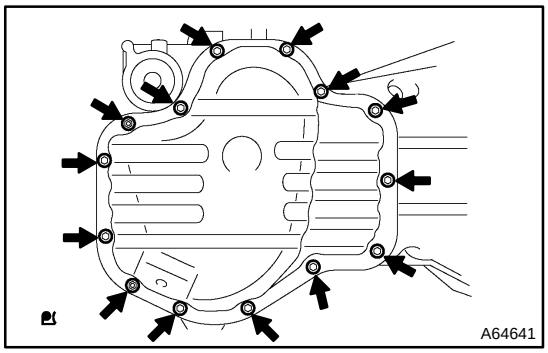

(c) Install the oil pan with the 12 bolts and 2 nuts.
Torque: 9.0 N·m (92 kgf·cm, 80 in.·lbf)

81. INSTALL OIL PAN DRAIN PLUG

(a) Install a new gasket and oil pan drain plug with a new gasket.
Torque: 25 N·m (255 kgf·cm, 18 ft·lbf)

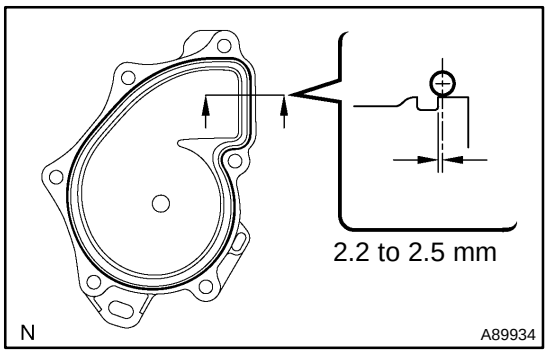

82. INSTALL WATER PUMP ASSY

(a) Clean the contact surface of the cylinder block.

(b) Apply seal packing in a continuous bead (diameter: 2.2 to 2.5 mm (0.09 to 0.10 in.)) to the outside edge of the water pump.
Seal packing: Part No. 08826−00100 or equivalent

NOTICE:

- **Remove any oil from the contact surface.**
- **Install the water pump within 5 minutes after applying seal packing.**
- **Do not start the engine for at least 2 hours after installing.**

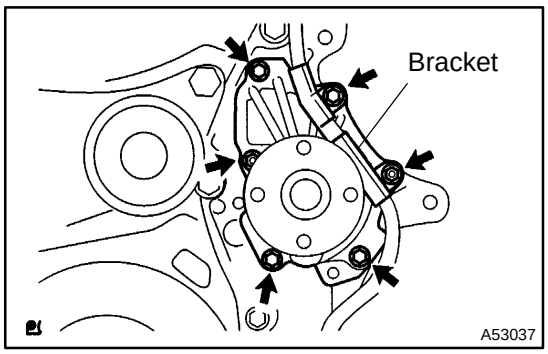

(c) Install the water pump and bracket with the 4 bolts and 2 nuts.
Torque: 9.0 N·m (92 kgf·cm, 80 in.·lbf)

NOTICE:
Tighten the outside bolts and nuts with the clamp.

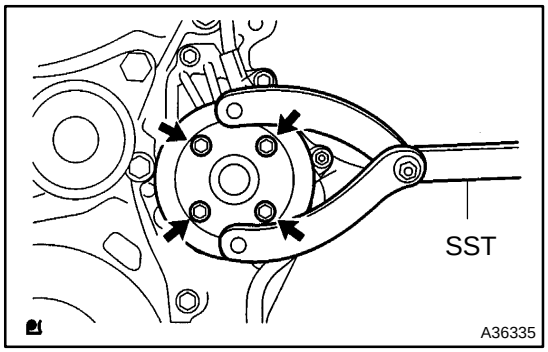

83. INSTALL WATER PUMP PULLEY

(a) Using SST, install the water pump pulley.
SST 09960−10010 (09962−01000, 09963−00700)
Torque: 26 N·m (265 kgf·cm, 19 ft·lbf)

84. INSTALL CRANKSHAFT POSITION SENSOR

(a) Install the sensor with the bolt.
Torque: 9.0 N·m (92 kgf·cm, 80 in.·lbf)

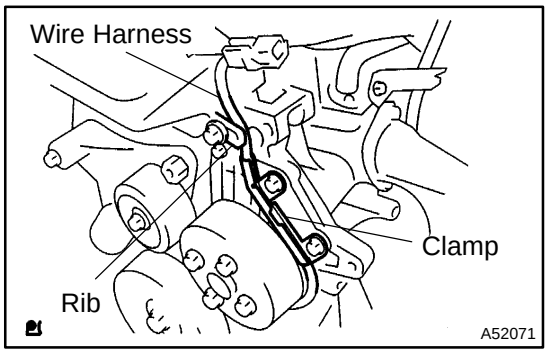

(b) Confirm that the wire harness of the sensor is placed as shown in the illustration.

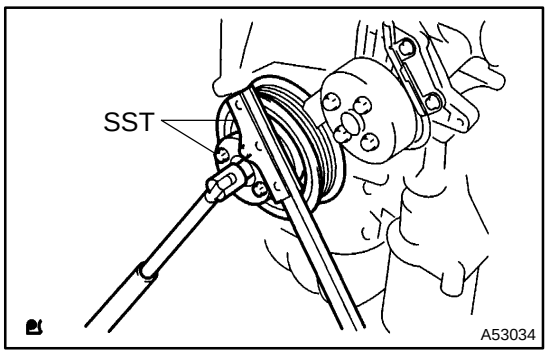

85. INSTALL CRANKSHAFT PULLEY

(a) Install the pulley.

(b) TMC made:
Using SST, tighten the bolt.
SST 09213−54015 (91651−60855), 09330−00021
Torque: 170 N·m (1,733 kgf·cm, 125 ft·lbf)

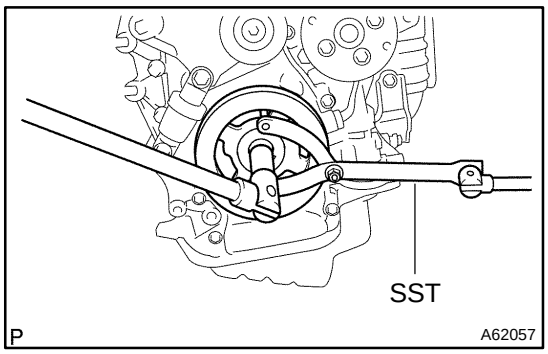

(c) TMMK made:
Using SST, tighten the set bolt.
SST 09960−10010 (09962−01000, 09963−01000)
Torque: 170 N·m (1,733 kgf·cm, 125 ft·lbf)

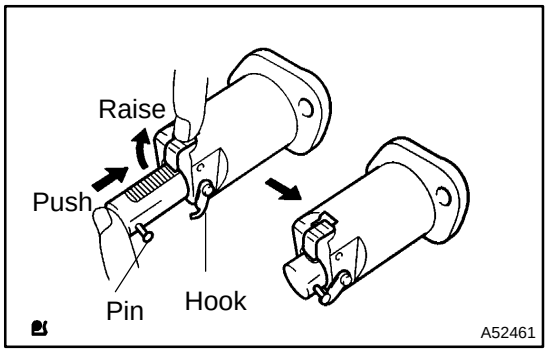

86. INSTALL CHAIN TENSIONER ASSY NO.1

(a) Release the ratchet pawl, fully push in the plunger and apply the hook to the pin so that the plunger cannot spring out.

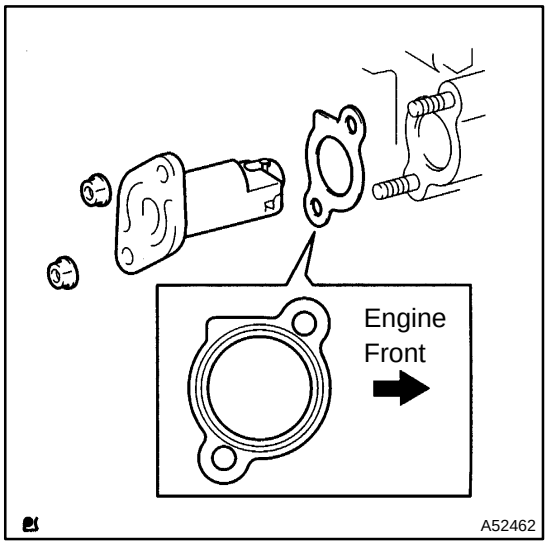

(b) Install a new gasket and the chain tensioner with the 2 nuts.
Torque: 9.0 N·m (92 kgf·cm, 80 in.·lbf)

NOTICE:
If the hook is released while inserting, apply the hook again, and insert the chain tensioner.

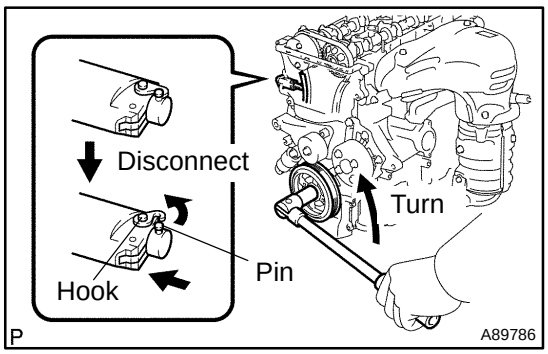

(c) Turn the crankshaft counterclockwise and check that the plunger knock pin is disconnected from the hook.

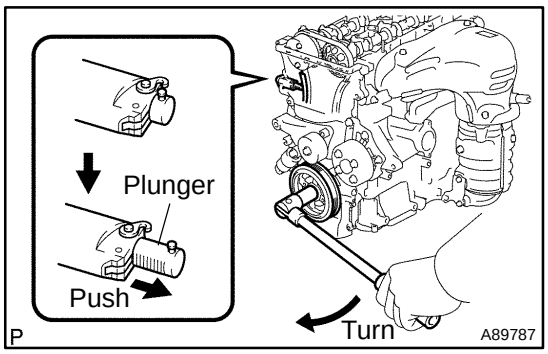

(d) Turn the crankshaft clockwise and check that the slipper is pushed by the plunger.

87. INSPECT VALVE CLEARANCE (See page 14−7)

88. ADJUST VALVE CLEARANCE (See page 14−7)

89. INSTALL CYLINDER HEAD COVER GASKET

(a) Install the gasket to the cylinder head cover.

90. INSTALL CYLINDER HEAD COVER SUB−ASSY

(a) Remove any old packing (FIPG) material.

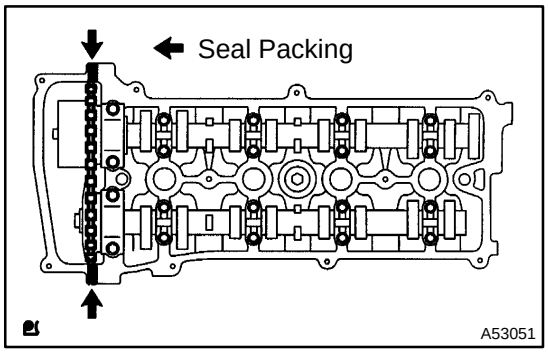

(b) Apply seal packing to the 2 locations shown in the illustration.

Seal packing: Part No. 08826−00080 or equivalent

NOTICE:

- **Remove any oil from the contact surface.**
- **Install the cylinder head cover within 5 minutes after applying seal packing.**
- **Do not apply engine oil for at least 2 hours after installing.**

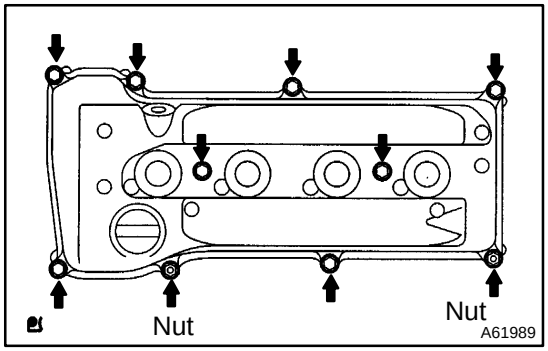

(c) Install the cylinder head cover with the 8 bolts and 2 nuts.

Torque: 11 N·m (112 kgf·cm, 8 ft·lbf)

91. INSTALL SPARK PLUG

Torque: 19 N·m (194 kgf·cm, 14 ft·lbf)

92. INSTALL VENTILATION VALVE SUB−ASSY

(a) Apply adhesive on the threads of the ventilation valve.

Torque: 19 N·m (194 kgf·cm, 14 ft·lbf)

Adhesive: Part No. 08833−00070 THREE BOND 1324 or equivalent

93. INSTALL OIL FILLER CAP SUB−ASSY

94. INSTALL OIL FILTER UNION

(a) Using a 12 mm hexagon wrench, install the oil filter union.

Torque: 30 N·m (306 kgf·cm, 22 ft·lbf)

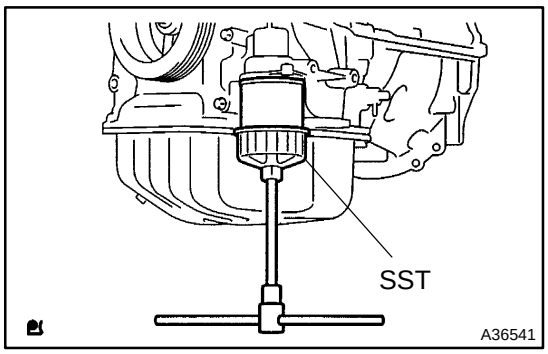

95. INSTALL OIL FILTER SUB−ASSY

(a) Check and clean the oil filter installation surface.

(b) Apply clean engine oil to the gasket of a new oil filter.

(c) Lightly screw the oil filter into place, and tighten it until the gasket contacts the seat.

(d) Using SST, tighten it an additional 3/4 turn.
SST 09228−06501

CHAIN (2AZ−FE)(From July, 2003)

141J1−01

REPLACEMENT

1. **REMOVE HOOD SUB−ASSY**
2. **REMOVE FRONT WHEEL RH**
3. **REMOVE ENGINE UNDER COVER LH**
4. **REMOVE ENGINE UNDER COVER RH**
5. **REMOVE FRONT FENDER APRON SEAL RH**
6. **DRAIN ENGINE OIL**

(a) Install a new gasket and the drain plug after draining engine oil.
Torque: 25 N·m (255 kgf·cm, 18 ft·lbf)

7. **REMOVE EXHAUST PIPE ASSY FRONT**

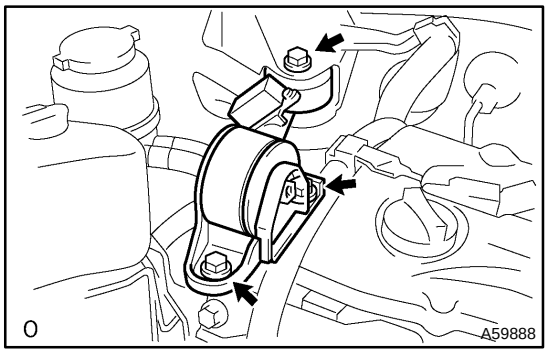

8. **REMOVE ENGINE MOVING CONTROL ROD W/BRACKET**

(a) Remove the 3 bolts and control rod.

9. **REMOVE ENGINE MOUNTING STAY NO.2 RH**
10. **REMOVE ENGINE MOUNTING BRACKET NO.2 RH**
11. **REMOVE FAN AND GENERATOR V BELT (See page 14−29)**
12. **REMOVE ENGINE COVER SUB−ASSY NO.1**
13. **DISCONNECT ENGINE WIRE**
14. **REMOVE GENERATOR ASSY**
15. **REMOVE VANE PUMP ASSY (See page 51−8)**

NOTICE:
Do not disconnect the hose.

16. **REMOVE IGNITION COIL ASSY**
17. **DISCONNECT VENTILATION HOSE**
18. **DISCONNECT VENTILATION HOSE NO.2**

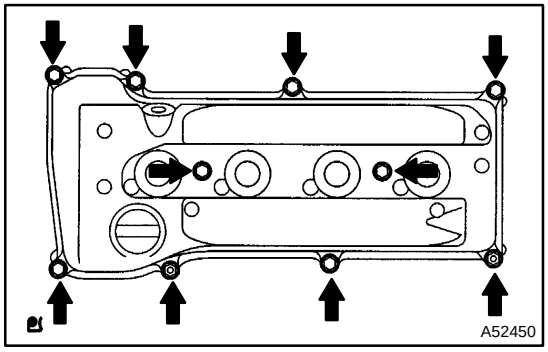

19. **REMOVE CYLINDER HEAD COVER SUB−ASSY**

(a) Remove the bolt and disconnect the engine wire harness clamp.
(b) Remove the 8 bolts and 2 nuts, and disconnect the cylinder head cover.

20. SET NO. 1 CYLINDER TO TDC/COMPRESSION (See page 14−7)

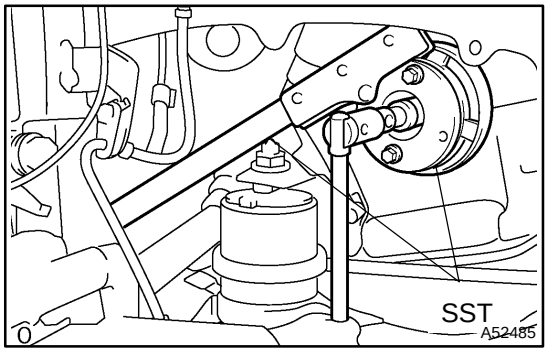

21. REMOVE CRANKSHAFT PULLEY

(a) TMC made:

Remove the crankshaft pulley.

(1) Using SST, fix the pulley and loosen the bolt.

SST 09213−54015 (91651−60855), 09330−00021

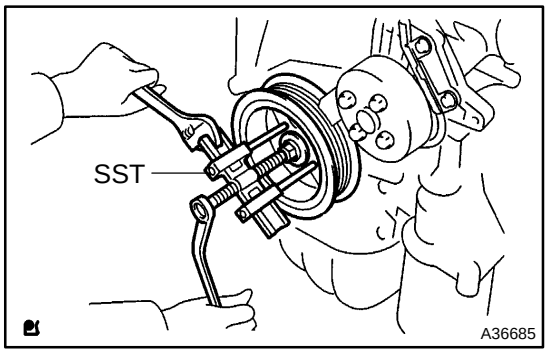

(2) Using SST, remove the bolt and pulley.

SST 09950−50013 (09951−05010, 09952−05010, 09953−05020, 09954−05021)

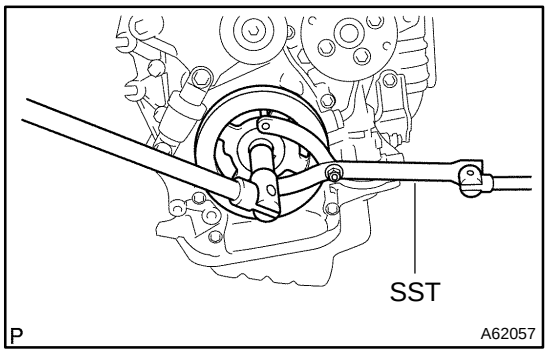

(b) TMMK made:

Remove the crankshaft pulley.

(1) Using SST, fix the pulley and remove the bolt.

SST 09960−10010 (09962−01000, 09963−01000)

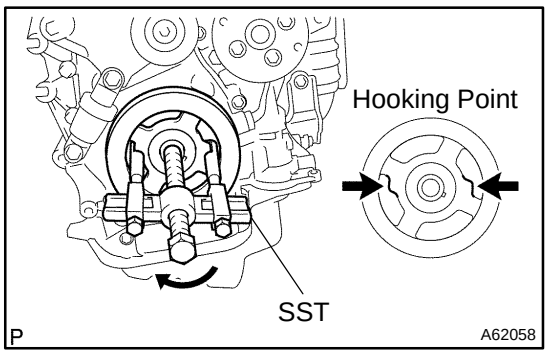

(2) Using SST, remove the crankshaft pulley.

SST 09950−40011 (09951−04010, 09952−04010, 09953−04030, 09954−04010, 09955−04041, 09957−04010, 91111−51014)

22. REMOVE CRANKSHAFT POSITION SENSOR

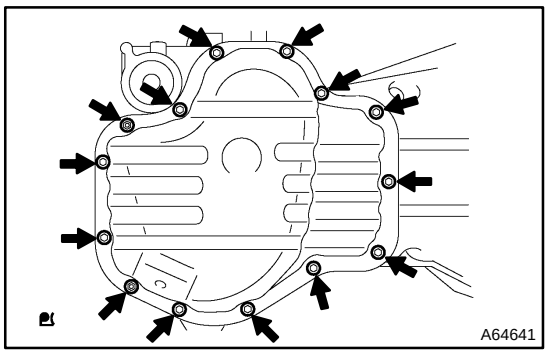

23. REMOVE OIL PAN SUB−ASSY

(a) Remove the 12 bolts and 2 nuts.

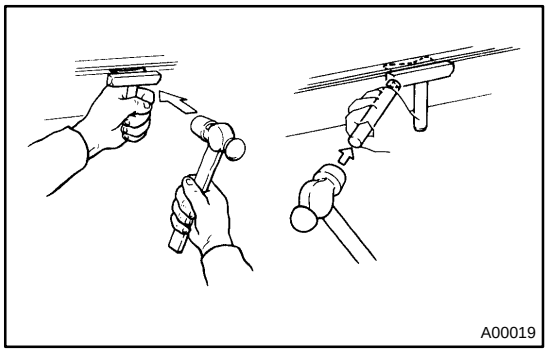

(b) Insert the blade of SST between the crankcase and oil pan. Cut through the sealer and remove the oil pan.
SST 09032−00100

NOTICE:

Be careful not to damage the contact surface of the cylinder block and oil pan.

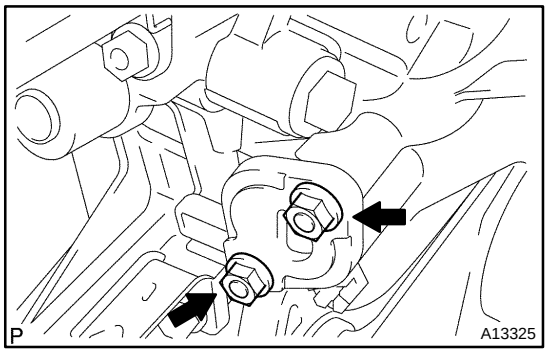

24. REMOVE CHAIN TENSIONER ASSY NO.1

(a) Remove the 2 nuts, tensioner and gasket.

NOTICE:

Do not revolve the crankshaft without the tensioner.

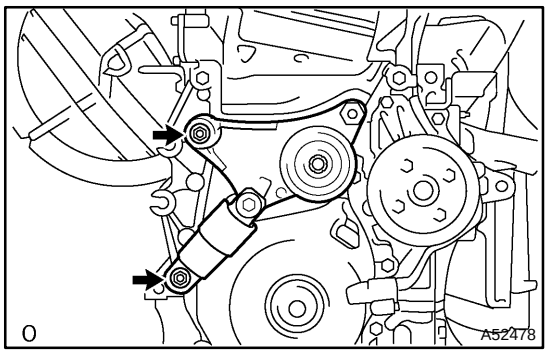

25. REMOVE V−RIBBED BELT TENSIONER ASSY

(a) Remove the bolt, nut and tensioner.

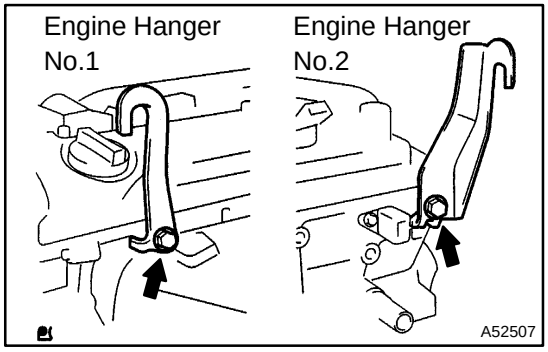

26. INSTALL ENGINE HANGER NO.1

(a) Install the engine hanger No. 1 and No. 2 with the bolts as shown in the illustration.
Parts No.:

Engine hanger No. 1	12281−28010
Engine hanger No. 2	12282−28010
Bolt	91512−61020

Torque: 38 N·m (387 kgf·cm, 28 ft·lbf)

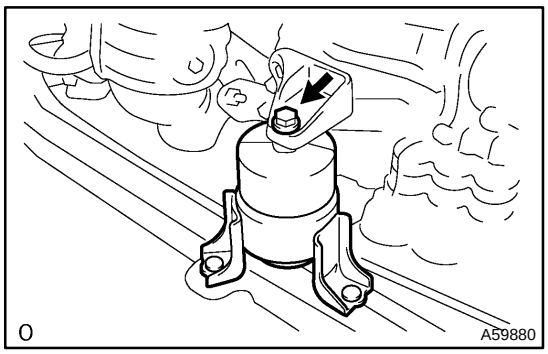

27. REMOVE ENGINE MOUNTING INSULATOR

(a) Attach the engine chain hoist to the engine hangers.

CAUTION:

Do not attempt to hang the engine by hooking the chain to any other part.

(b) Remove the bolt and disconnect the engine mounting insulator FR.

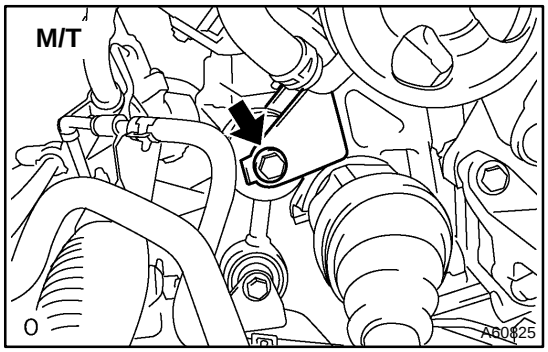

(c) M/T:
Remove the bolt and disconnect the engine lateral control rod.

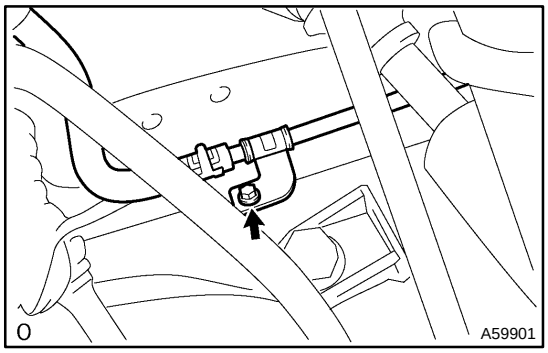

(d) Remove the bolt and disconnect the steering gear return hose clamp from the frame.

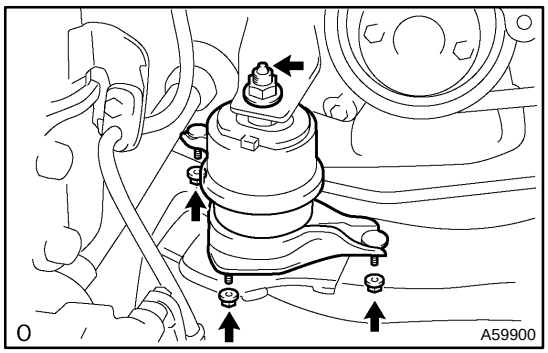

(e) Remove the 4 nuts from the engine mounting insulator RH.

(f) Raise the engine and remove the engine mounting insulator RH.

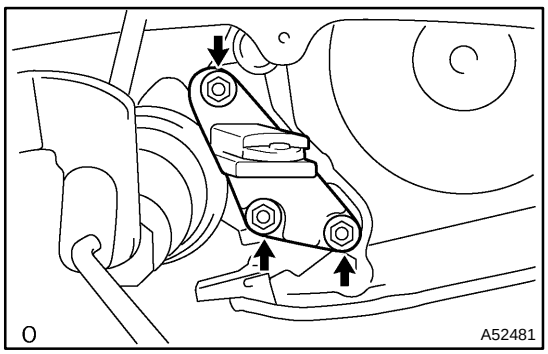

28. REMOVE ENGINE MOUNTING BRACKET RH

(a) Remove the 3 bolts and engine mounting bracket.

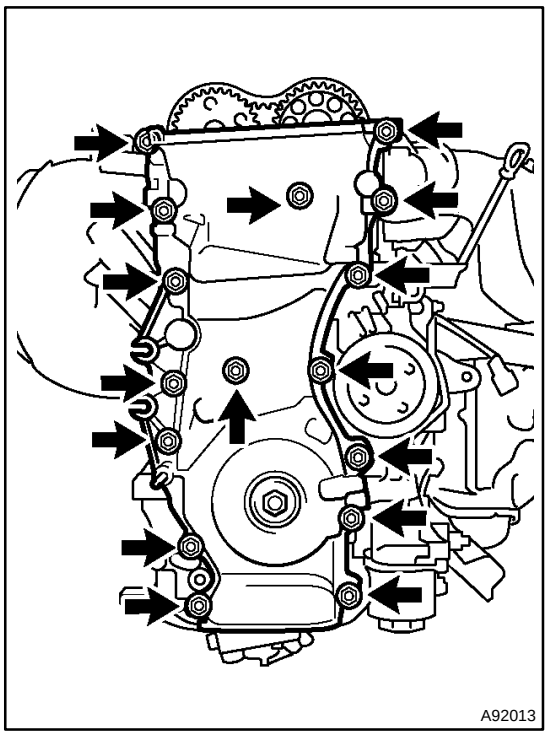

29. REMOVE TIMING CHAIN OR BELT COVER SUB−ASSY

(a) Remove the stud bolt for the drive belt tensioner from the cylinder block.

(b) Remove the 14 bolts and 2 nuts.

(c) Pry out the timing chain cover with a screwdriver.

NOTICE:

Be careful not to damage the contact surfaces of the timing chain cover, cylinder block and cylinder head.

30. REMOVE CRANKSHAFT POSITION SENSOR PLATE NO.1

31. REMOVE CHAIN TENSIONER SLIPPER

32. REMOVE CHAIN VIBRATION DAMPER NO.1

33. REMOVE CHAIN SUB−ASSY

34. REMOVE CRANKSHAFT TIMING GEAR OR SPROCKET

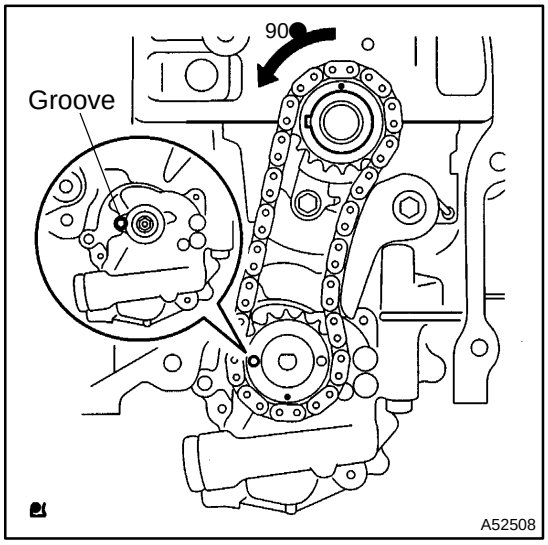

35. REMOVE NO.2 CHAIN SUB−ASSY

(a) Turn the crankshaft counterclockwise by 90° and align an adjusting hole of the oil pump driven sprocket with the groove of the oil pump.

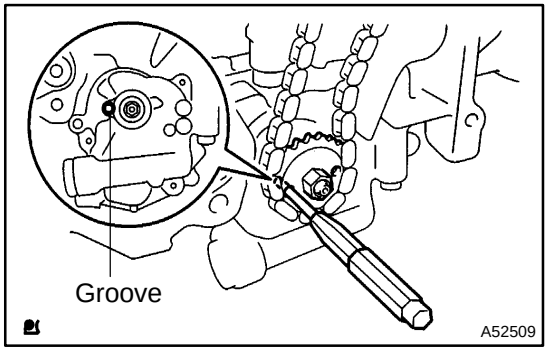

(b) Put a bar (ϕ 4 mm) in the adjusting hole of the oil pump driven sprocket to temporarily lock the sprocket in position. Remove the nut.

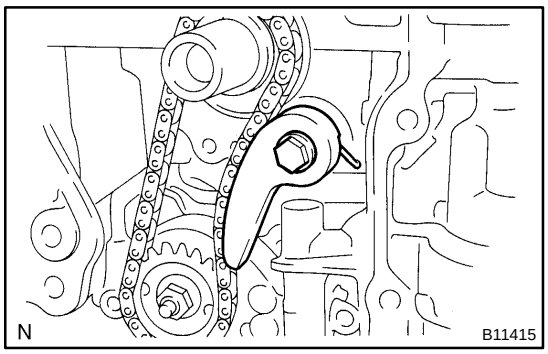

(c) Remove the bolt, chain tensioner plate and spring.
(d) Remove the chain tensioner, oil pump driven sprocket and chain.

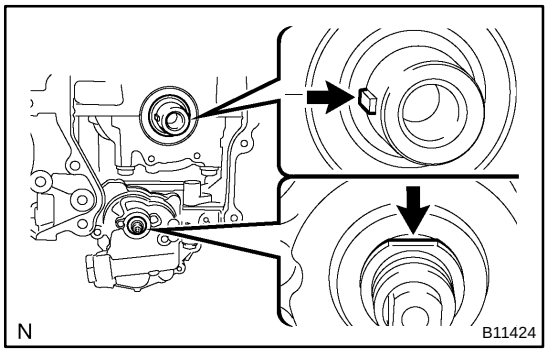

36. INSTALL NO.2 CHAIN SUB−ASSY

(a) Set the crankshaft key into the left horizontal position.
(b) Turn the cutout of the drive shaft to the top.

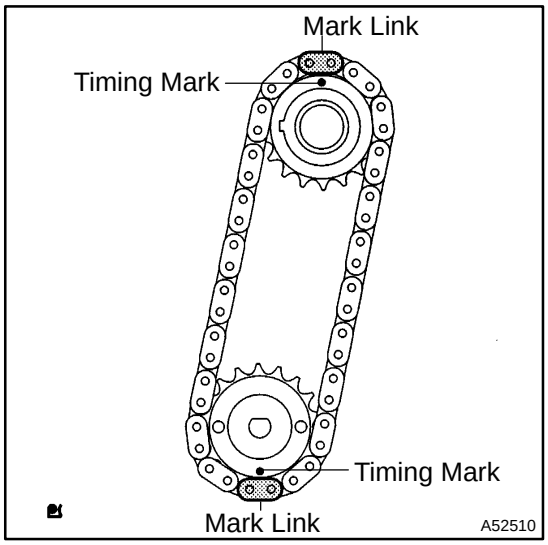

(c) Align the mark links (yellow colored links) with the timing marks of the sprocket as shown in the illustration.
(d) Insert the sprockets with chain to the crankshaft and oil pump shaft.
(e) Temporarily tighten the oil pump driven sprocket with the nut.

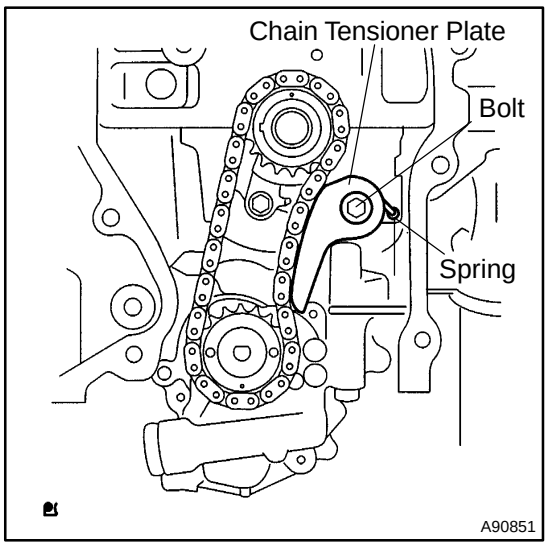

(f) Insert the damper spring into the adjusting hole, and install the chain tensioner plate with the nut.
Torque: 12 N·m (122 kgf·cm, 9 ft·lbf)

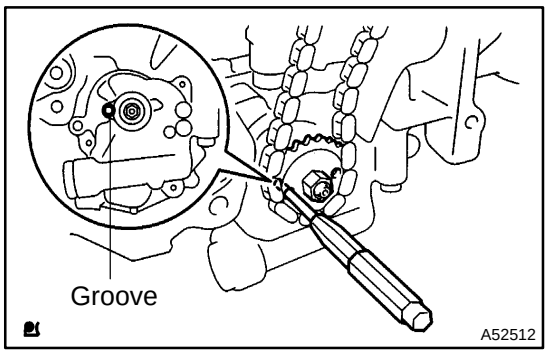

(g) Align the adjusting hole of the oil pump driven sprocket with the groove of the oil pump.

(h) Put a bar (ϕ 4 mm) in the adjusting hole of the oil pump driven sprocket to temporarily lock the sprocket in position. Install the nut.
Torque: 30 N·m (301 kgf·cm, 22 ft·lbf)

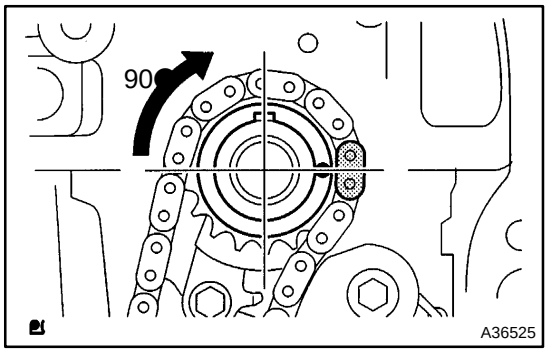

(i) Rotate the crankshaft counterclockwise by 90° and align the crankshaft key to the top.

37. INSTALL CHAIN VIBRATION DAMPER NO.1
Torque: 9.0 N·m (92 kgf·cm, 80 in.·lbf)

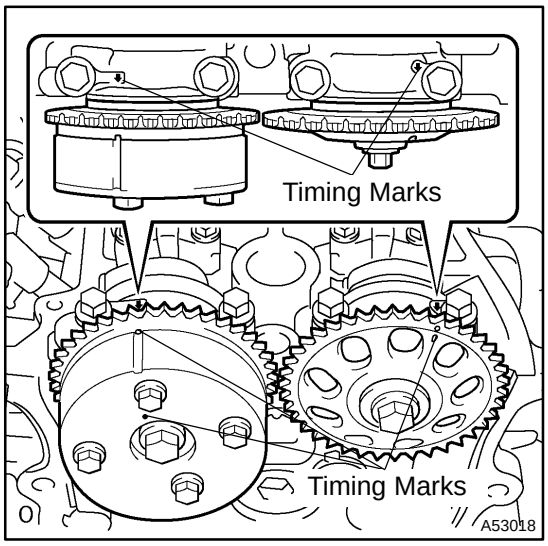

38. INSTALL CHAIN SUB−ASSY

(a) Set the No.1 cylinder to TDC/compression.

(1) Align the timing marks of the camshaft timing sprockets and bearing caps (No. 1 and No. 2).

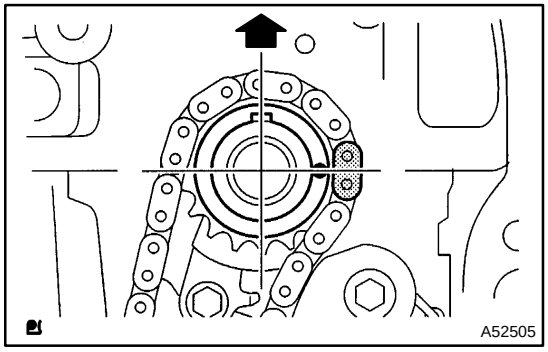

(2) Using the crankshaft pulley bolt, turn the crankshaft and set the set key on the crankshaft upward.

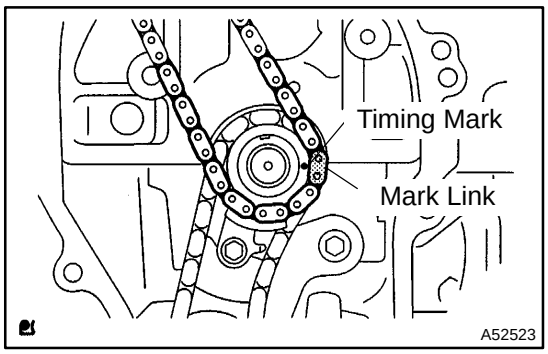

(b) Align the mark link (gold or orange colored link) with the timing mark of the crankshaft timing sprocket.

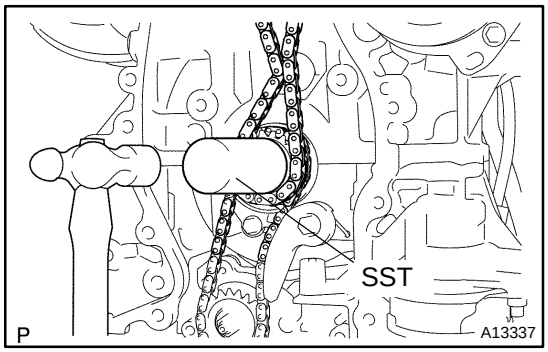

(c) Using SST, tap in the sprocket.
SST 09309−37010

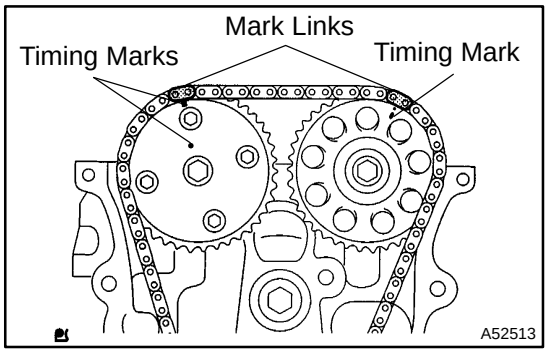

(d) Align the mark links (gold or yellow colored links) with the timing marks of the camshaft timing gear and camshaft timing sprocket. Install the chain.

39. INSTALL CHAIN TENSIONER SLIPPER
Torque: 19 N·m (194 kgf·cm, 14 ft·lbf)

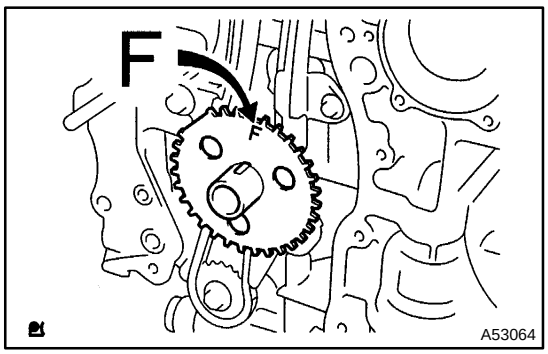

40. INSTALL CRANKSHAFT POSITION SENSOR PLATE NO.1

(a) Install the sensor plate with the F mark facing forward.

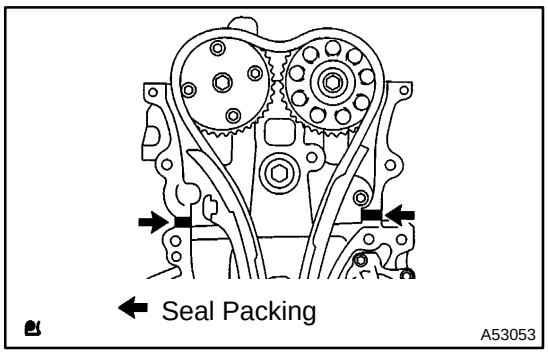

41. INSTALL TIMING CHAIN OR BELT COVER SUB−ASSY

NOTICE:

- **Remove any oil from the contact surface.**
- **Install the chain cover within 3 minutes after applying seal packing.**
- **Do not start the engine for at least 2 hours after installing.**

(a) Remove any old packing (FIPG) material and be careful not to drop any oil on the contact surfaces of the timing chain cover, cylinder head and cylinder block.

(b) Apply seal packing in a continuous bead (diameter: 2 mm (0.099 in.)) as shown in the illustration.
Seal packing: Part No. 08826−00080 or equivalent

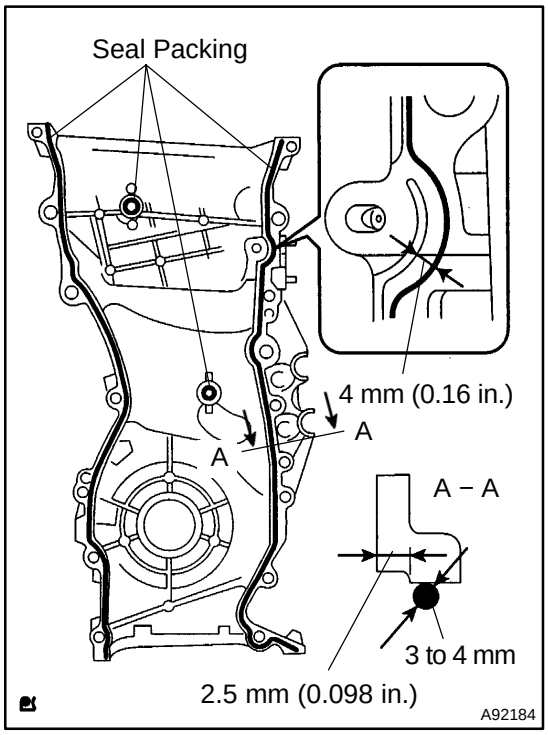

(c) Apply seal packing in a continuous bead (diameter: 3 to 4 mm (0.12 to 0.16 in.)) as shown in the illustration.
Seal packing: Part No. 08826−00080 or equivalent

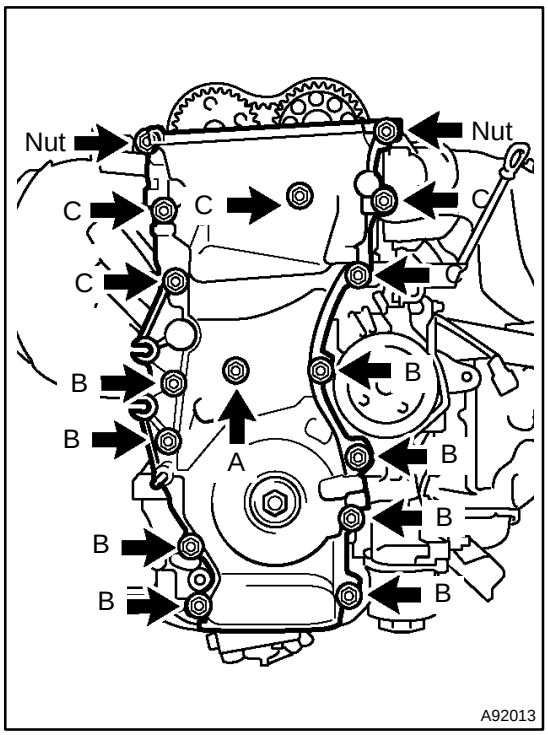

(d) Install the timing chain cover with the 14 bolts and 2 nuts.
Torque:
9.0 N·m (92 kgf·cm, 80 in.·lbf) for bolt A
21 N·m (214 kgf·cm, 15 ft·lbf) for bolt B
43 N·m (438 kgf·cm, 32 ft·lbf) for bolt C
9.0 N·m (92 kgf·cm, 80 in.·lbf) for nut

(e) Install the stud bolt to the drive belt tensioner.
Torque: 10 N·m (102 kgf·cm, 7 ft·lbf)

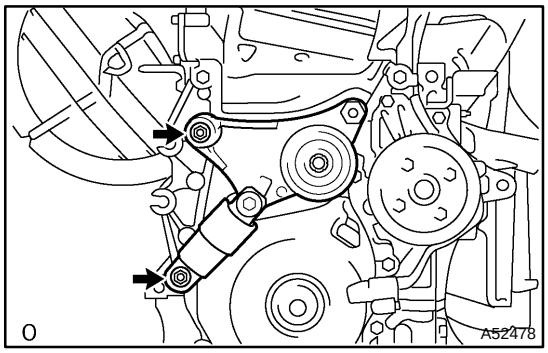

42. INSTALL V−RIBBED BELT TENSIONER ASSY

(a) Install the tensioner with the bolt and nut.
Torque: 59.5 N·m (607 kgf·cm, 44 ft·lbf)

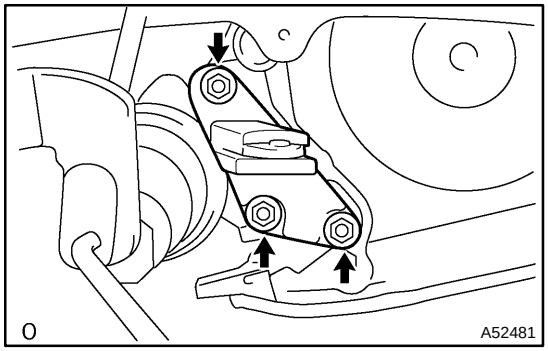

43. INSTALL ENGINE MOUNTING BRACKET RH

(a) Install the engine mounting bracket with the 3 bolts.
Torque: 54 N·m (551 kgf·cm, 40 ft·lbf)

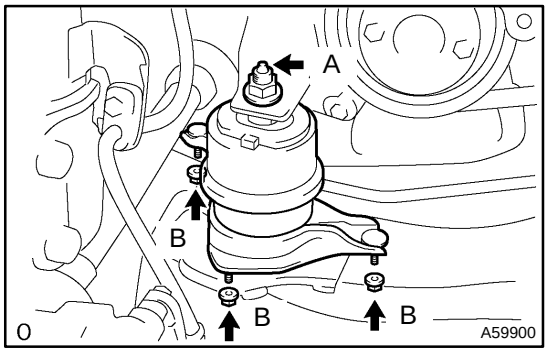

44. INSTALL ENGINE MOUNTING INSULATOR

(a) Raise the engine and install the engine mounting insulator RH.

(b) Install the engine mounting insulator RH with the 4 nuts.
Torque:
95 N·m (969 kgf·cm, 70 ft·lbf) for bolt A
87 N·m (888 kgf·cm, 64 ft·lbf) for bolt B

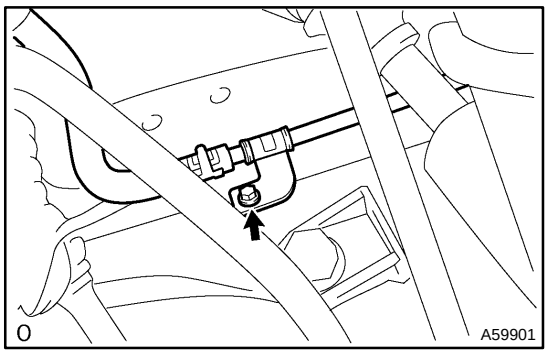

(c) Install the steering gear return hose clamp to the frame with the bolt.
Torque: 8.0 N·m (80 kgf·cm, 69 in.·lbf)

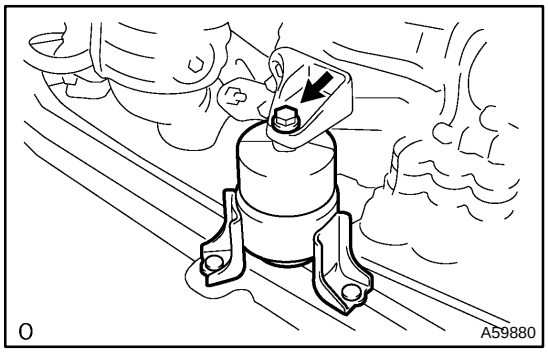

(d) Install the engine mounting insulator FR with the bolt.
Torque: 87 N·m (888 kgf·cm, 64 ft·lbf)

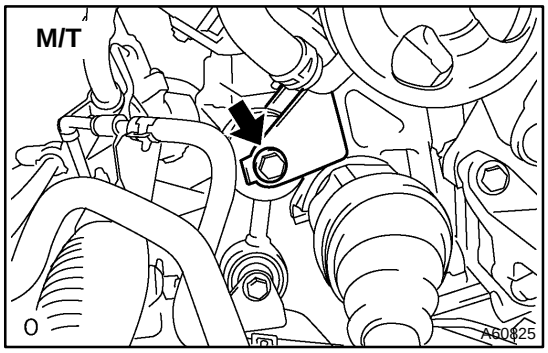

(e) M/T:
Install the engine lateral control rod with the bolt.
Torque: 89 N·m (910 kgf·cm, 66 ft·lbf)

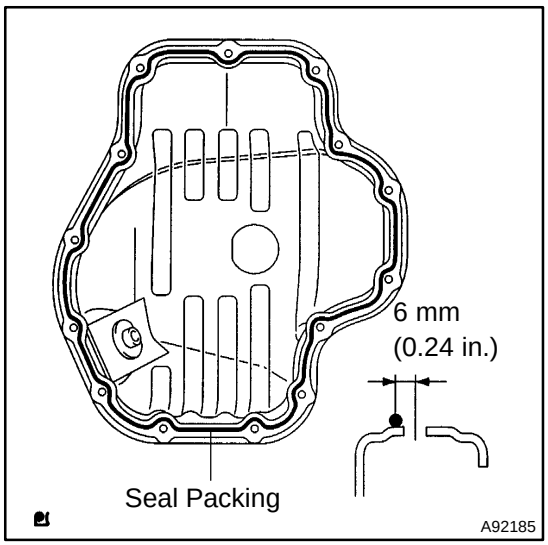

45. INSTALL OIL PAN SUB−ASSY

NOTICE:

- **Remove any oil from the contact surface.**
- **Install the oil pan within 3 minutes after applying seal packing.**
- **Do not start the engine for at least 2 hours after installing.**

(a) Remove any old packing (FIPG) material and be careful not to drop any oil on the contact surface of the cylinder block and oil pan.

(b) Apply seal packing in a continuous bead (diameter: 3 to 4 mm (0.12 to 0.16 in.)) as shown in the illustration, and install the oil pan.
Seal packing: Part No. 08826−00080 or equivalent

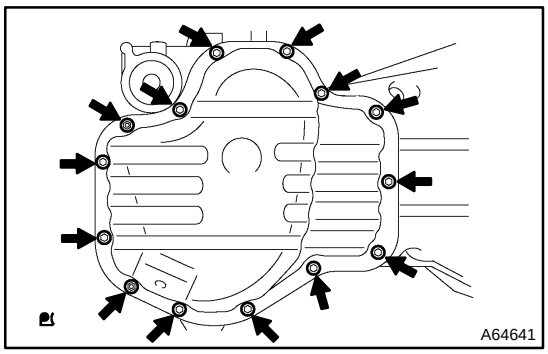

(c) Install the oil pan with the 12 bolts and 2 nuts.
Torque: 9.0 N·m (92 kgf·cm, 80 in.·lbf)

46. INSTALL CHAIN TENSIONER ASSY NO.1 (See page 14−47)

47. INSTALL CRANKSHAFT POSITION SENSOR

(a) Install the bolt and sensor.
Torque: 9.0 N·m (92 kgf·cm, 80 in.·lbf)

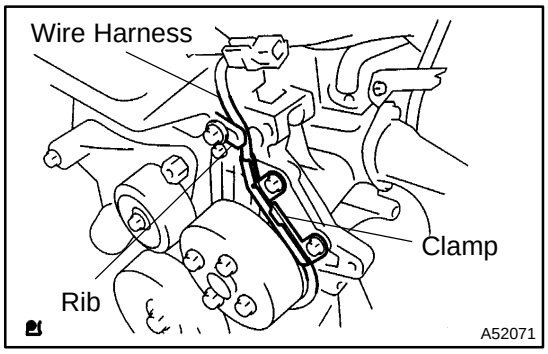

(b) Confirm that the wire harness of the sensor is placed as shown in the illustration.

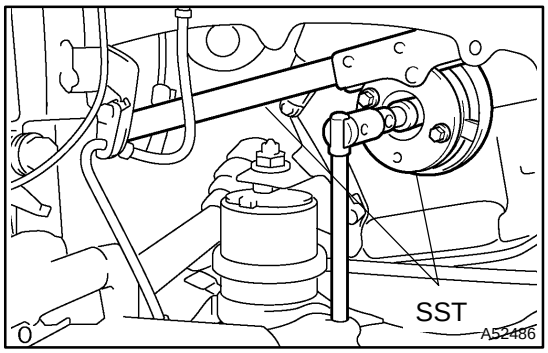

48. INSTALL CRANKSHAFT PULLEY

(a) TMC made:
Install the crankshaft pulley.
(1) Align the pulley set key with the key groove of the pulley, and side on the pulley.
(2) Using SST, install the pulley bolt.
SST 09213−54015 (91651−60855), 09330−00021
Torque: 170 N·m (1,733 kgf·cm, 125 ft lbf)

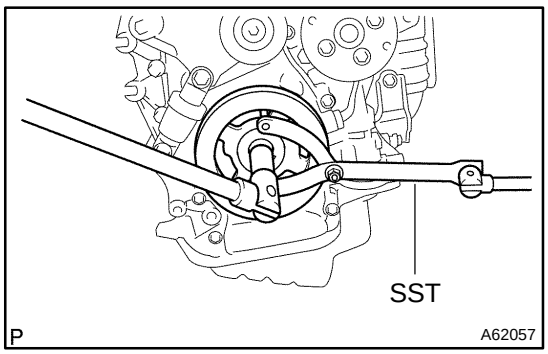

(b) TMMK made:
Install the crankshaft pulley.
(1) Align the pulley set key with the key groove of the pulley, and side on the pulley.
SST 09960−10010 (09962−01000, 09963−01000)
(2) Using SST, install the pulley bolt.
Torque: 170 N·m (1,733 kgf·cm, 125 ft lbf)

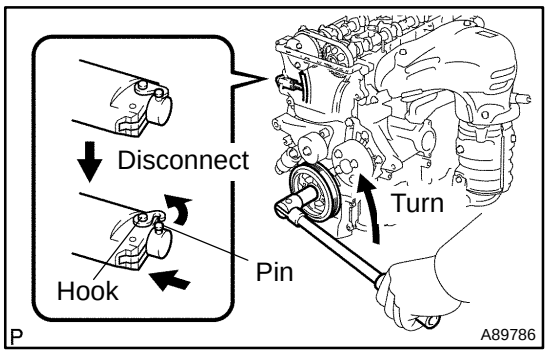

(c) Turn the crankshaft counterclockwise and disconnect the plunger knock pin from the hook.

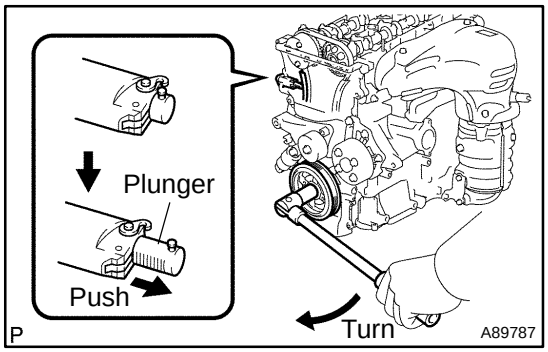

(d) Turn the crankshaft clockwise and check that the slipper is pushed by the plunger.

49. INSTALL CYLINDER HEAD COVER SUB−ASSY (See page 14−47)
50. INSTALL IGNITION COIL ASSY
Torque: 19 N·m (194 kgf·cm, 14 ft·lbf)
51. INSTALL VANE PUMP ASSY (See page 51−8)
52. INSTALL GENERATOR ASSY (See page 19−17)
53. INSTALL ENGINE WIRE
54. INSTALL FAN AND GENERATOR V BELT (See page 14−5)
55. INSTALL ENGINE MOUNTING BRACKET NO.2 RH
Torque: 52 N·m (531 kgf·cm, 38 ft·lbf)
56. INSTALL ENGINE MOUNTING STAY NO.2 RH
Torque: 64 N·m (653 kgf·cm, 47 ft·lbf)

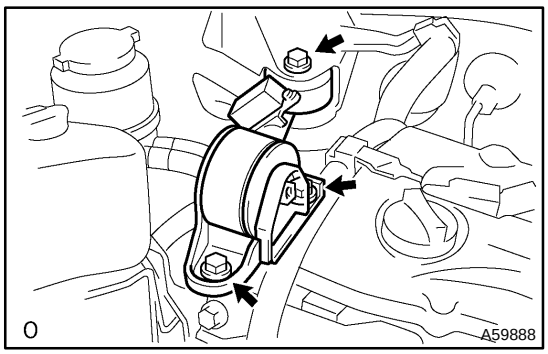

57. INSTALL ENGINE MOVING CONTROL ROD W/BRACKET
(a) Install the engine mounting control rod with the 3 bolts.
Torque: 64 N·m (653 kgf·cm, 47 ft·lbf)

58. INSTALL EXHAUST PIPE ASSY FRONT (See page 15−3)
59. INSTALL FRONT WHEEL RH
60. INSTALL HOOD SUB−ASSY
Torque: 13 N·m (133 kgf·cm, 10 ft·lbf)
61. ADD ENGINE OIL

62. INSPECT CHECK FOR ENGINE OIL LEAKS

CAMSHAFT (2AZ−FE)(From July, 2003)

1405Y−06

REPLACEMENT

1. REMOVE FRONT WHEEL RH
2. REMOVE FRONT FENDER APRON SEAL RH
3. REMOVE ENGINE COVER SUB−ASSY NO.1
4. REMOVE SPARK PLUG
5. DISCONNECT VENTILATION HOSE
6. DISCONNECT VENTILATION HOSE NO.2
7. DISCONNECT ENGINE WIRE

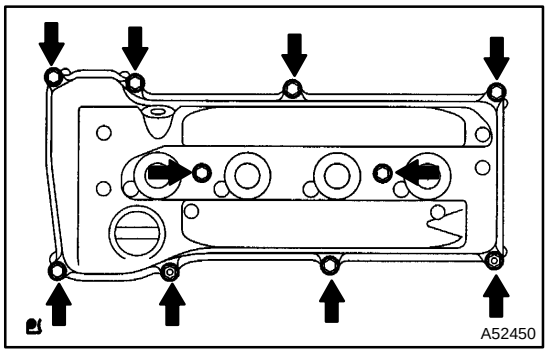

8. REMOVE CYLINDER HEAD COVER SUB−ASSY

(a) Remove the bolt and disconnect the engine wire harness clamp.

(b) Remove the bolts, 2 nuts, cylinder head cover and gasket.

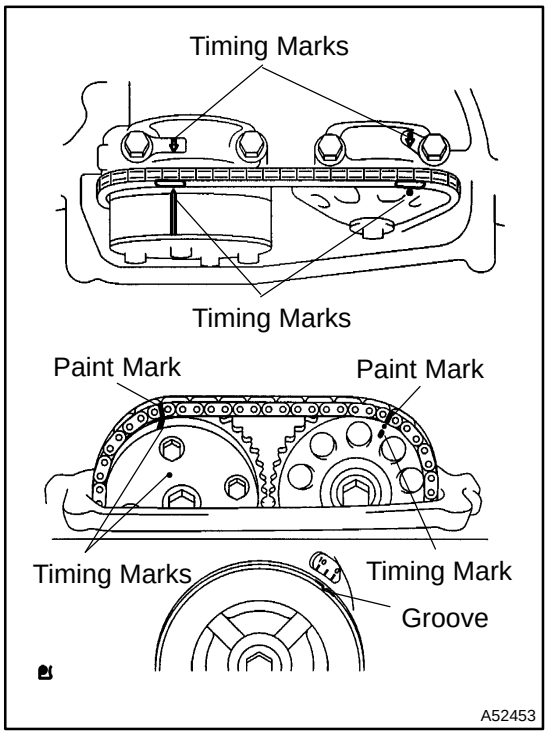

9. SET NO. 1 CYLINDER TO TDC/COMPRESSION

(a) Turn the crankshaft pulley, and align its groove with the timing mark 0 of the timing chain cover.

(b) Check that the timing marks of the camshaft timing gear and camshaft timing sprocket are aligned with the timing marks of the bearing cap as shown in the illustration.

(c) Place a paint mark on the timing chain.

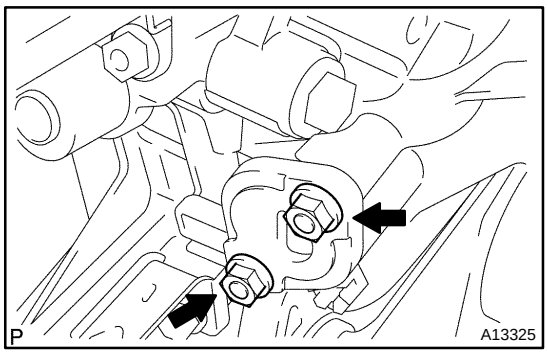

10. REMOVE CHAIN TENSIONER ASSY NO.1

(a) Remove the 2 nuts, tensioner and gasket.

NOTICE:

Be sure not to revolve the crankshaft without the tensioner.

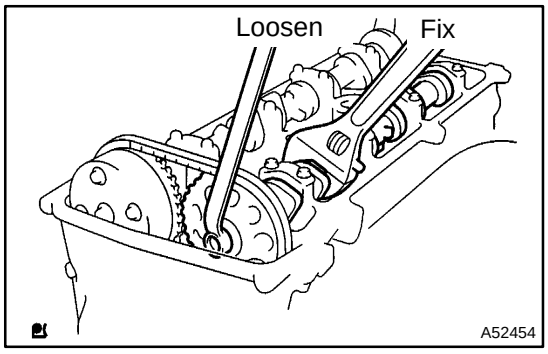

11. REMOVE CAMSHAFT SUB−ASSY, NO.2

(a) Fix the camshaft with a wrench and then loosen the sprocket bolt.

NOTICE:

Be careful not to damage the valve lifter.

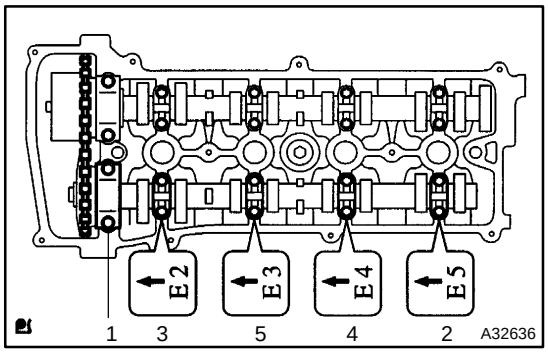

(b) Uniformly loosen and remove the No. 2 camshaft's 10 bearing cap bolts in the sequence shown in the illustration. Then remove the 5 bearing caps.

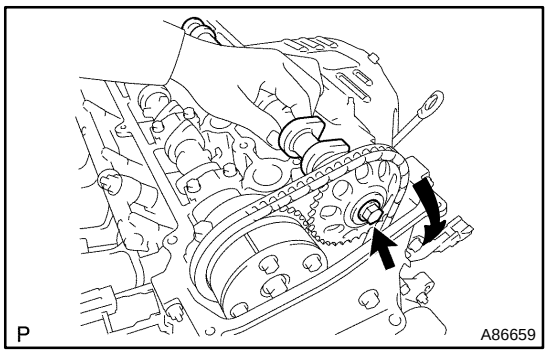

(c) Raise the No. 2 camahaft and remove it. Then remove the sprocket bolt.

(d) Remove the timing chain sprocket and the timing chain from the No. 2 camshaft.

(e) Remove the camshaft timing sprocket from the timing chain.

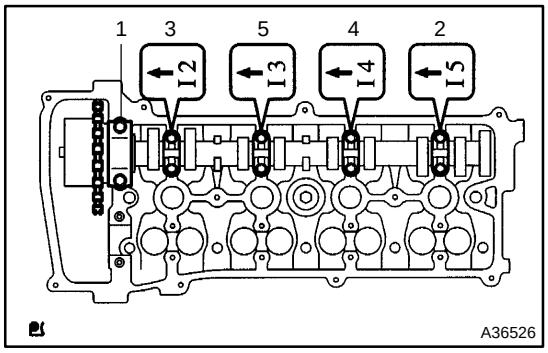

12. REMOVE CAMSHAFT

(a) Uniformly loosen and remove the camshaft's 10 bearing cap bolts in the sequence shown in the illustration. Then remove the 5 bearing caps.

(b) Remove the camshaft.

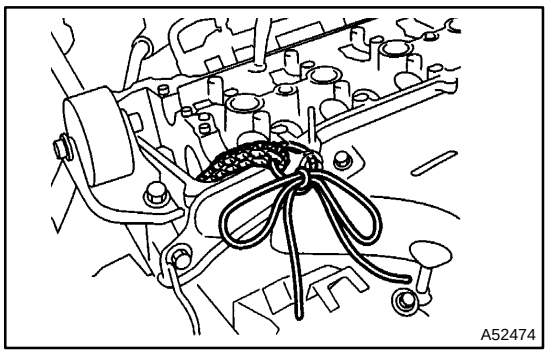

(c) Tie the timing chain with a string.

NOTICE:

Do not drop anything inside the timing chain cover.

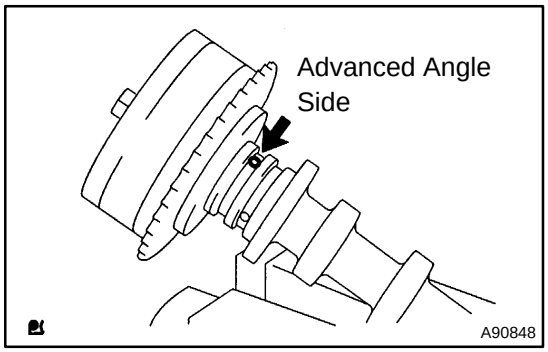

13. REMOVE CAMSHAFT TIMING GEAR ASSY

(a) Fix the No. 1 camshaft with a vise, and make sure that the camshaft timing gear does not rotate.

(b) Cover all the paths with vinyl tape except the advanced side path shown in the illustration.

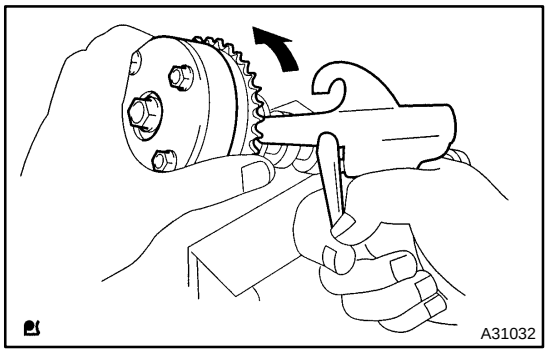

(c) Using an air gun, apply about 150 kPA (1.5kgf/cm), 21 psi) of air pressure to the port on the advanced angle side.

CAUTION:

Some oil spraying will occur. Contain the spray with a shop rag.

HINT:

This operation releases the lock pin for the extreme retarded angle lock.

(d) Under the condition above, check that the camshaft timing gear can be turned by hand to the advanced angle side (counterclokwise), the direction of the arrow in the illustration.

Standard: Must turn

HINT:

The camshaft timing gear will turn to the advanced angle side without applying foce by hand depending on the force of the air pressure applied. Also, if applying pressure to the oil path is difficult as a result of air leakage from the port, the lock−pin may be difficult to release.

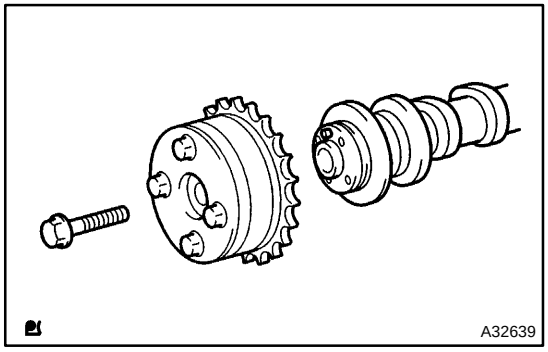

(e) Remove the fringe bolt from the camshaft timing gear.

NOTICE:

- **Be sure not to remove the other 4 bolts.**
- **If planning to reuse the camshaft timing gear assembly, release the straight pin lock first, and then install the gear.**

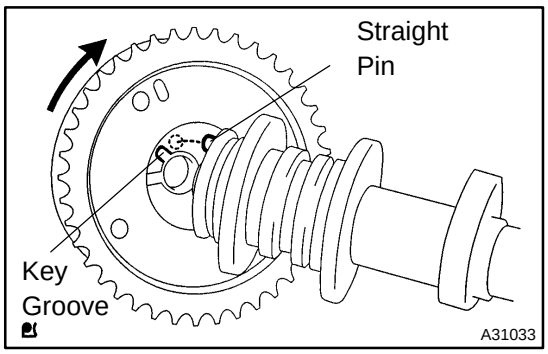

14. INSTALL CAMSHAFT TIMING GEAR ASSY

(a) Put the camshaft timing gear and the camshaft together with the straight pin and key groove.

(b) Turn the camshaft timing gear (as shown in the illustration) while pushing it lightly against the camshaft. Push further at the position where the pin gets into the groove.

NOTICE:

Be sure not to turn the camshaft timing gear to the retarded angle side (to the right direction).

(c) Check that there is no clearance between the gear's fringe and the camshaft.

(d) Tighten the fringe bolt with the camshaft timing gear fixed.
Torque: 54 N·m (551 kgf·cm, 40 ft·lbf)

(e) Check that the camshaft timing gear can move to the retarded angle side (to the right direction) and is locked at the extrene retard angleed position.

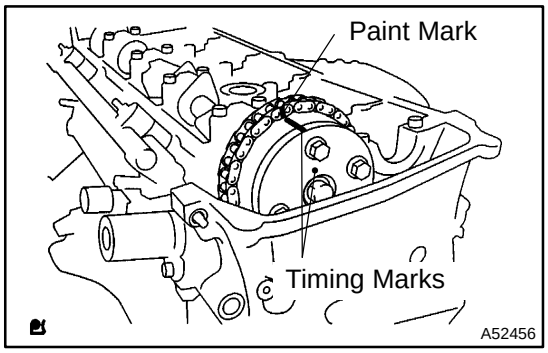

15. INSTALL CAMSHAFT

(a) Install the timing chain on the camshaft timing gear, with the painted mark of the link aligned with the timing marks of the camshaft timing sprocket.

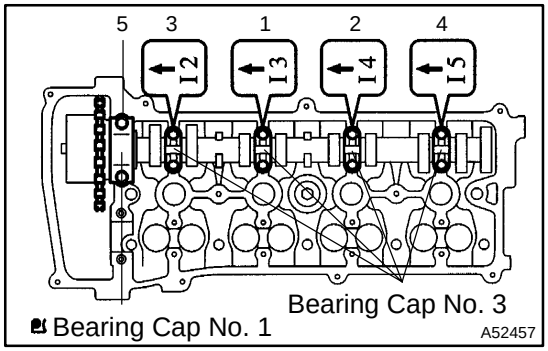

(b) Examine the front marks and unmbers of the 5 bearing caps and install them. Then install the 10 bearing cap bolts. Uniformly tighten the bolts in the sequence shown in the illustration.
Torque:
30 N·m (301 kgf·cm, 22 ft·lbf) for bearing cap No. 1
9.0 N·m (92 kgf·cm, 80 in.·lbf) for bearing cap No. 3

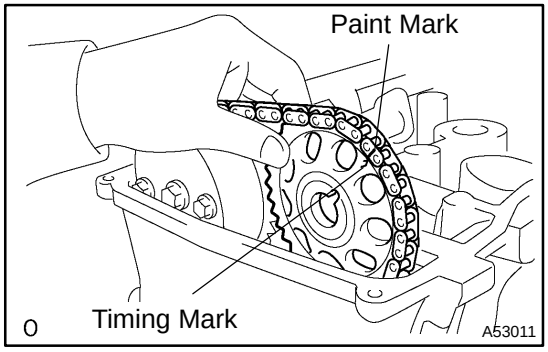

16. INSTALL NO.2 CAMSHAFT

(a) Put the camshaft on the cylinder head with the painted mark of the link of chain aligned with the timing mark of the camshaft timing sprocket.

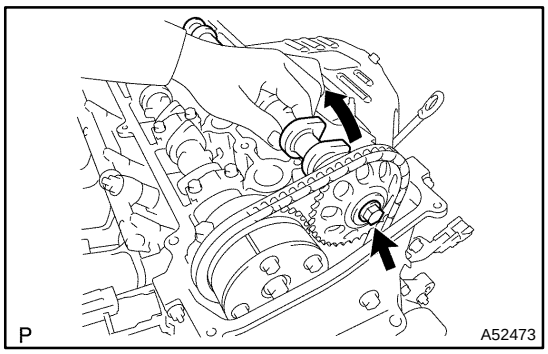

(b) Raising the camshaft, temporarily tighten the sprocket bolt.

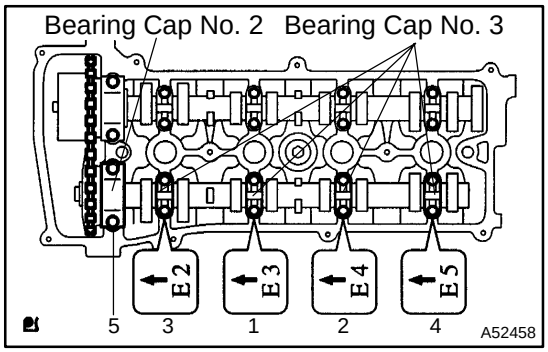

(c) Examine the front marks and unmbers of the 5 bearing caps and install them. Then install the 10 bearing cap bolts. Uniformly tighten the bolts in the sequence shown in the illustration.

Torque:
30 N·m (301 kgf·cm, 22 ft·lbf) for bearing cap No. 2
9.0 N·m (92 kgf·cm, 80 in.·lbf) for bearing cap No. 3

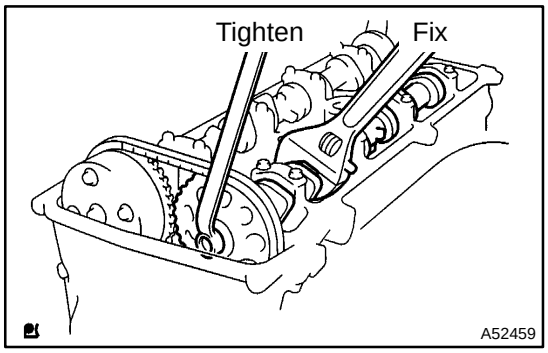

(d) Fix the camshaft with a wrench, and then tighten the sprocket bolt.

Torque: 54 N·m (551 kgf·cm, 40 ft·lbf)

NOTICE:
Be careful not to damage the valve lifter.

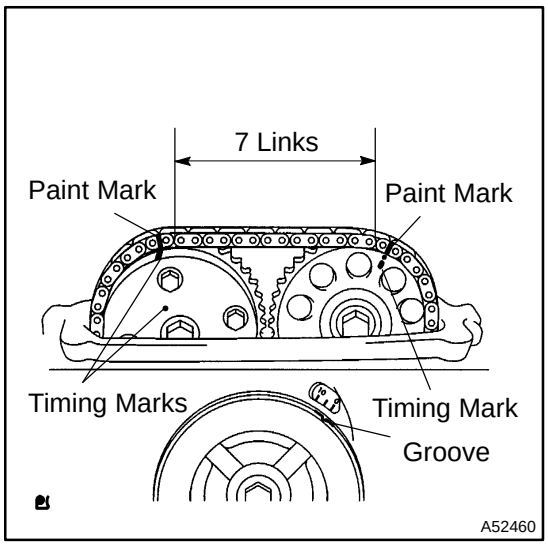

(e) As shown in the illustration, check the paint marks of the timing chain, camshaft timing gear and camshaft timing sprocket and the alignment of the pulley groove with timing mark of the chain cover.

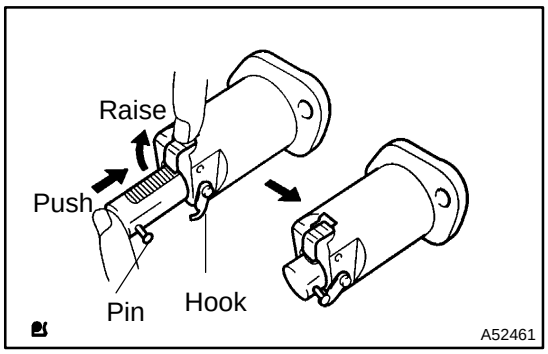

17. INSTALL CHAIN TENSIONER ASSY NO.1

(a) Release the ratchet pawl, fully push in the plunger and apply the hook to the pin so that the plunger cannot spring out.

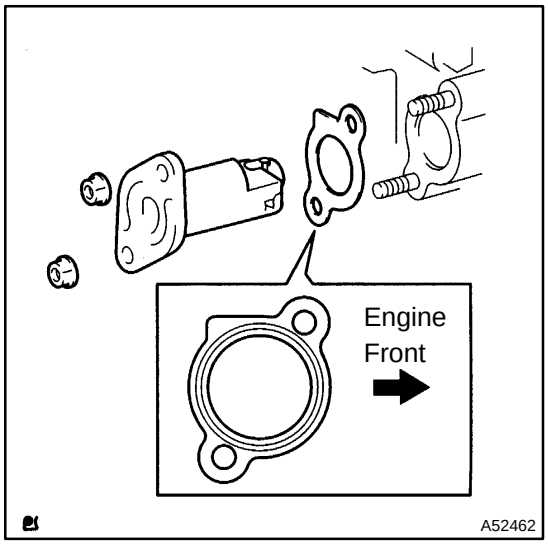

(b) Install a new gasket and the chain tensioner with the 2 nuts.

Torque: 9.0 N·m (92 kgf·cm, 80 in.·lbf)

NOTICE:

When installing the tensioner, set the hook again if the hook releases the plunger.

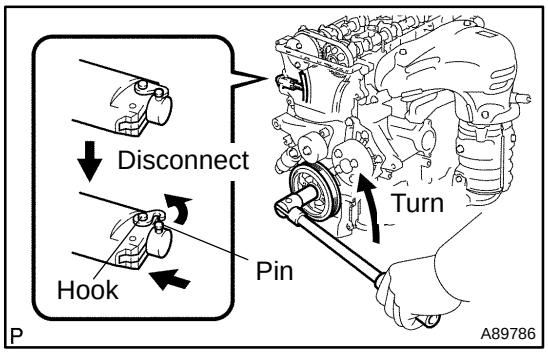

(c) Turn the crankshaft counterclockwise and check that the plunger knock pin is disconnected from the hook.

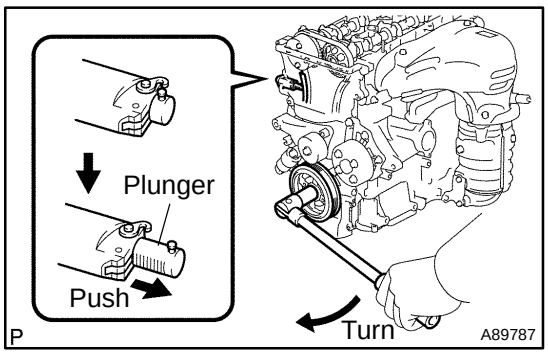

(d) Turn the crankshaft clockwise and check that the slipper is pushed by the plunger.

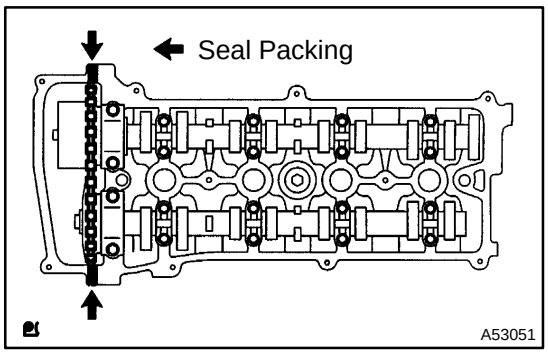

18. INSTALL CYLINDER HEAD COVER SUB−ASSY

(a) Remove any old packing (FIPG) material.

(b) Apply seal packing to 2 locations as shown in the illustration.

Seal packing: Part No. 08826−00080 or equivalent

NOTICE:

- **Remove any oil the contact surface.**
- **Install the cylinder head cover within 5 minutes after applying seal packing.**
- **Do not apply engine oil for at least 2 hours after installing.**

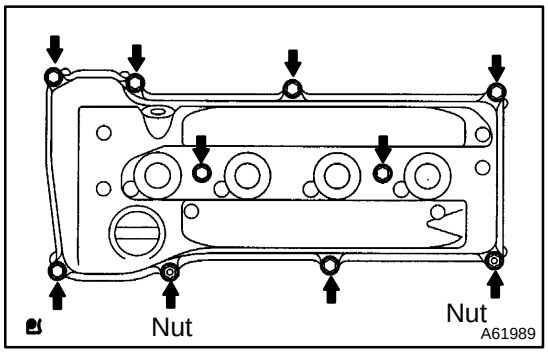

(c) Install the cylinder head cover with the 8 bolts and 2 nuts.
Torque: 11 N·m (110 kgf·cm, 8 ft·lbf)

19. CONNECT ENGINE WIRE

20. INSTALL SPARK PLUG
Torque: 19 N·m (194 kgf·cm, 14 ft·lbf)

21. INSTALL FRONT WHEEL RH
Torque: 103 N·m (1,050 kgf·cm, 76 ft·lbf)

22. INSPECT OIL LEAK

CYLINDER HEAD GASKET (2AZ−FE)(From July, 2003)

141J3−02

REPLACEMENT

1. **WORK FOR PREVENTING GASOLINE FROM SPILLING OUT (See page 11−1)**
2. **REMOVE FRONT SUSPENSION UPPER BRACE CENTER (W/ FRONT SUSPENSION BRACE UPPER CENTER)**
3. **DRAIN COOLANT (See page 16−6)**
4. **DISCONNECT RADIATOR HOSE OUTLET**
5. **DISCONNECT UNION TO CONNECTOR TUBE HOSE**
6. **DISCONNECT HEATER INLET WATER HOSE**
7. **DISCONNECT FUEL TUBE SUB−ASSY (See page 11−1)**

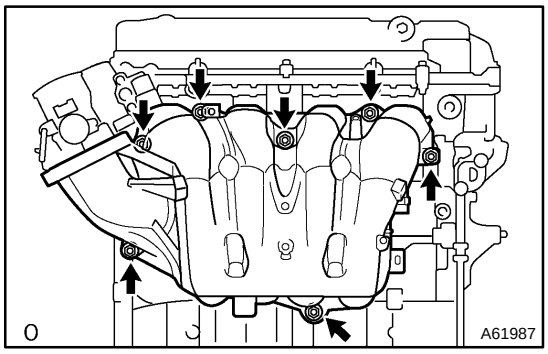

8. **REMOVE INTAKE MANIFOLD**

(a) Disconnect the 2 water by−pass hoses of the throttle body.

(b) Remove the 5 bolts, 2 nuts, intake manifold and gasket.

9. **REMOVE INTAKE MANIFOLD RUNNER VALVE ASSY (See page 13−5)**
10. **DISCONNECT ENGINE WIRE**
11. **REMOVE INTAKE MANIFOLD INSULATOR NO.1**
12. **REMOVE EXHAUST MANIFOLD HEAT INSULATOR NO.1**

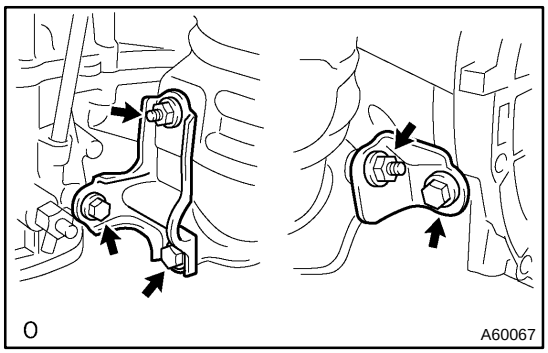

13. **REMOVE EXHAUST MANIFOLD CONVERTER SUB−ASSY**

(a) Remove the 3 bolts, 2 nuts, No. 1 and No. 2 exhaust manifold stays.

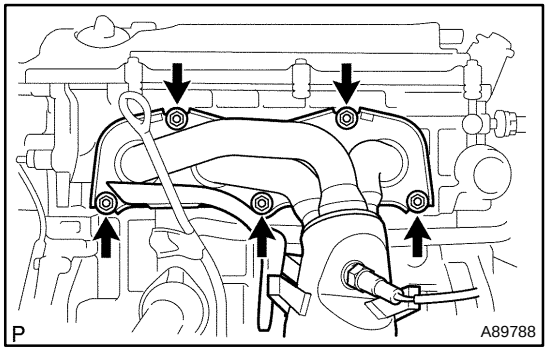

(b) Remove the 5 nuts, exhaust manifold and gasket.

14. REMOVE CHAIN SUB−ASSY (See page 14−75)

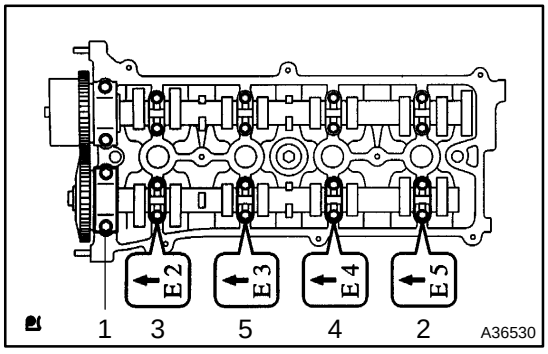

15. REMOVE NO.2 CAMSHAFT

(a) Uniformly loosen and remove the No. 2 camshaft's 10 bearing cap bolts in the sequence shown in the illustration. Then remove the 5 bearings.

(b) Remove the camshaft.

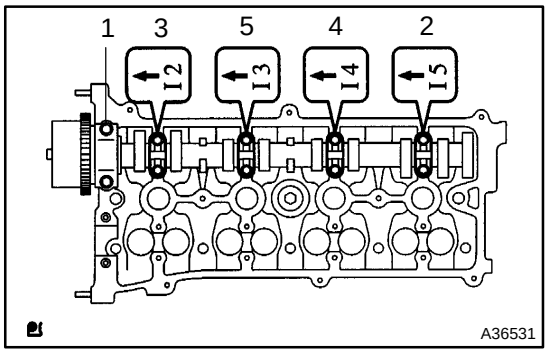

16. REMOVE CAMSHAFT

(a) Uniformly loosen and remove the No. 2 camshaft's 10 bearing cap bolts in the sequence shown in the illustration. Then remove the 5 bearings.

(b) Remove the camshaft.

17. REMOVE CAMSHAFT BEARING NO.2

18. REMOVE CAMSHAFT TIMING OIL CONTROL VALVE ASSY

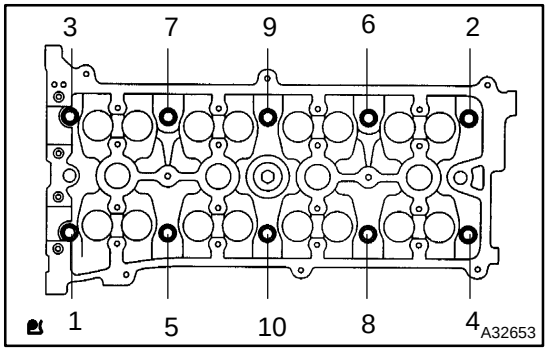

19. REMOVE CYLINDER HEAD SUB−ASSY

(a) Using a 10 mm bi−hexagon wrench, uniformly loosen the 10 bolts in the sequence shown in the illustration. Remove the 10 cylinder head bolts and plate washers.

NOTICE:

- **Be careful not to drop washers into the cylinder head.**
- **Head warpage or cracking could result from removing bolts in an incorrect order.**

20. REMOVE CYLINDER HEAD GASKET

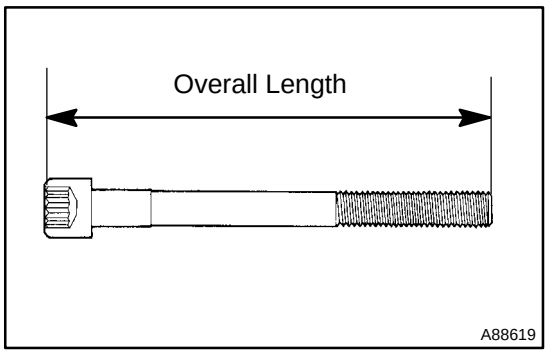

21. INSPECT CYLINDER HEAD SET BOLT

(a) Using a vernier caliper, measure the length of the head bolts from the seat to the end.

Specified bolt length:

161.3 to 164.2 mm (6.350 to 6.465 in.)

If the length is greater than the maximum, replace the bolt.

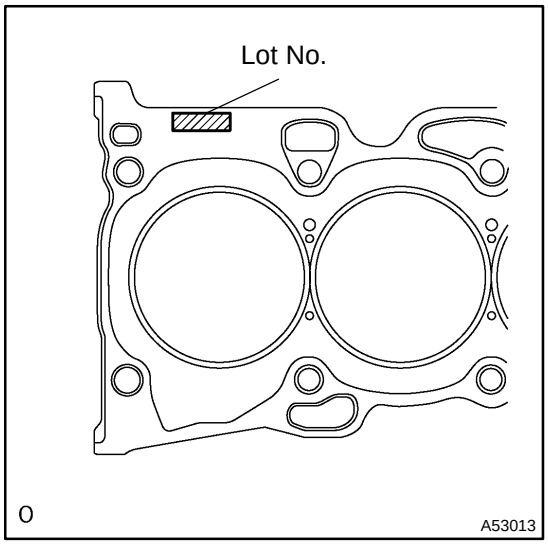

22. INSTALL CYLINDER HEAD GASKET

(a) Place a new gasket on the cylinder block surface with the Lot No. stamp upward.

NOTICE:

- **Remove any oil from contact surface.**
- **Be careful of the installation direction.**
- **To avoid damage to the gasket, place the cylinder head on the gasket carefully.**

23. INSTALL CYLINDER HEAD SUB−ASSY

HINT:

The cylinder head bolts are tightened in 2 progressive steps.

(a) Apply a light coat of engine oil on the threads and under the heads of the cylinder head bolts.

(b) Install the bolts and plate washers to the cylinder head.

NOTICE:

Do not drop the washers into the cylinder head.

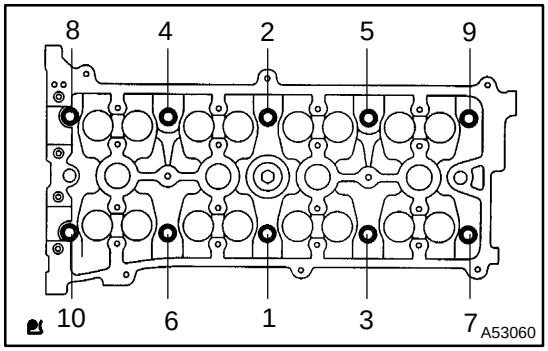

(c) Using a 10 mm bi−hexagon wrench, uniformly tighten the 10 bolts in the sequence shown in the illustration.

Torque: 79 N·m (806 kgf·cm, 58 ft·lbf)

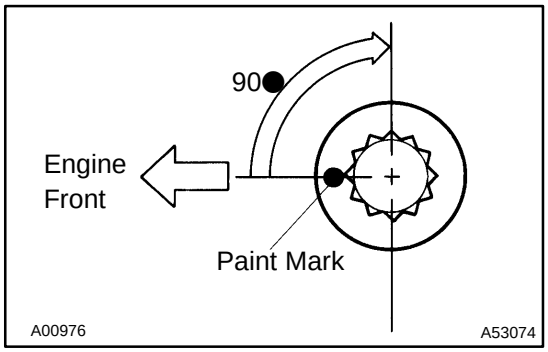

(d) Mark the front side of the cylinder head bolt with paint.

(e) Retighten the cylinder head bolts by 90● in the sequence shown in the illustration.

(f) Check that the painted mark is now at a 90● angle to the front.

24. INSTALL CAMSHAFT TIMING OIL CONTROL VALVE ASSY
Torque: 9.0 N·m (92 kgf·cm, 80 in.·lbf)

25. INSTALL CAMSHAFT BEARING NO.2

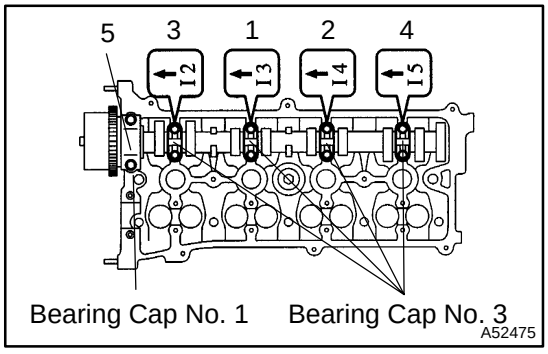

26. INSTALL CAMSHAFT

(a) Examine the front marks and numbers of the 5 bearing caps and install them. Then install the 10 bearing cap bolts. Uniformly tighten the bolts in the sequence shown in the illustration.
Torque:
30 N·m (301 kgf·cm, 22 ft·lbf) for bearing cap No. 1
9.0 N·m (92 kgf·cm, 80 in.·lbf) for bearing cap No. 3

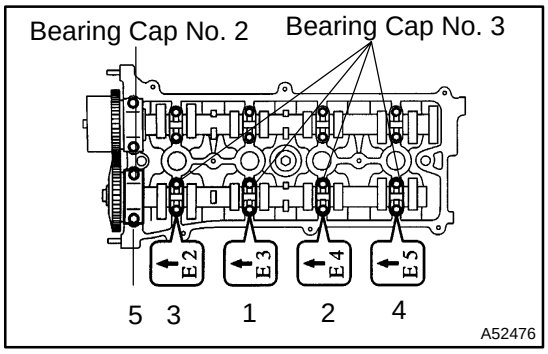

27. INSTALL NO.2 CAMSHAFT

(a) Examine the front marks and numbers of the 5 bearing caps and install them. Then install the 10 bearing cap bolts. Uniformly tighten the bolts in the sequence shown in the illustration.
Torque:
30 N·m (301 kgf·cm, 22 ft·lbf) for bearing cap No.2
9.0 N·m (92 kgf·cm, 80 in.·lbf) for bearing cap No.3

28. INSTALL CHAIN SUB−ASSY (See page 14−75)

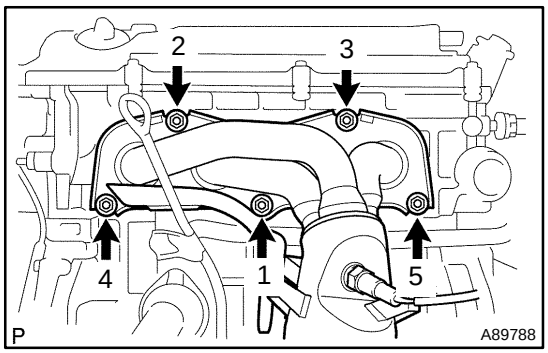

29. INSTALL EXHAUST MANIFOLD CONVERTER SUB−ASSY

(a) Install a new gasket and the exhaust manifold with the 5 nuts.
Torque: 37 N·m (378 kgf·cm, 27 ft·lbf)

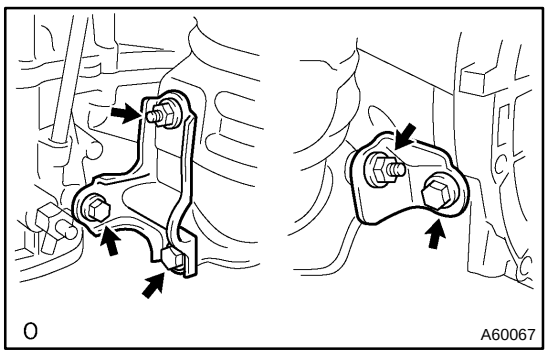

(b) Install the No. 1 and No. 2 exhaust manifold stays with the 3 bolts and 2 nuts.
Torque: 44 N·m (449 kgf·cm, 32 ft·lbf)

30. INSTALL EXHAUST MANIFOLD HEAT INSULATOR NO.1
Torque: 12 N·m (122 kgf·cm, 9 ft·lbf)

31. INSTALL INTAKE MANIFOLD RUNNER VALVE ASSY (See page 13−5)

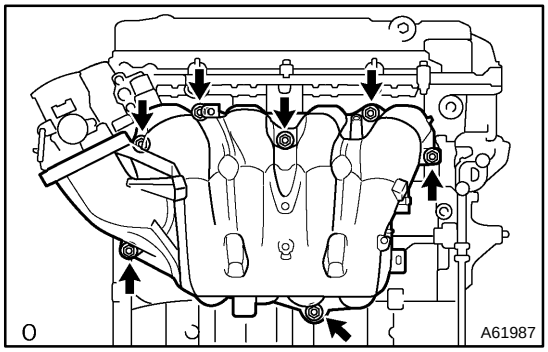

32. INSTALL INTAKE MANIFOLD

(a) Install a new gasket and the intake manifold with the 5 bolts and 2 nuts.
Torque: 30 N·m (306 kgf·cm, 22 ft·lbf)

33. CONNECT FUEL TUBE SUB−ASSY (See page 11−1)
34. ADD ENGINE OIL
35. ADD ENGINE COOLANT (See page 16−6)
36. CHECK FOR ENGINE OIL LEAKS
37. CHECK FOR ENGINE COOLANT LEAKS (See page 16−1)
38. INSPECT FOR FUEL LEAKS (See page 11−4)
39. INSPECT CHECK IDLE SPEED AND IGNITION TIMING (See page 14−1)
40. INSPECT CO/HC (See page 14−1)

TIMING GEAR CASE OR TIMING CHAIN CASE OIL SEAL (2AZ−FE)(From July, 2003)

141J0−01

REPLACEMENT

1. **REMOVE FRONT WHEEL RH**
2. **REMOVE FRONT FENDER APRON SEAL RH**
3. **REMOVE ENGINE COVER SUB−ASSY NO.1**

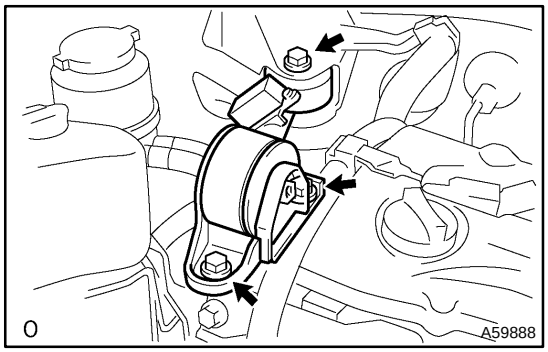

4. **REMOVE ENGINE MOVING CONTROL ROD W/BRACKET**

(a) Remove the 3 bolts and control rod.

5. **REMOVE ENGINE MOUNTING STAY NO.2 RH**
6. **REMOVE ENGINE MOUNTING BRACKET NO.2 RH**
7. **REMOVE FAN AND GENERATOR V BELT (See page14−5)**

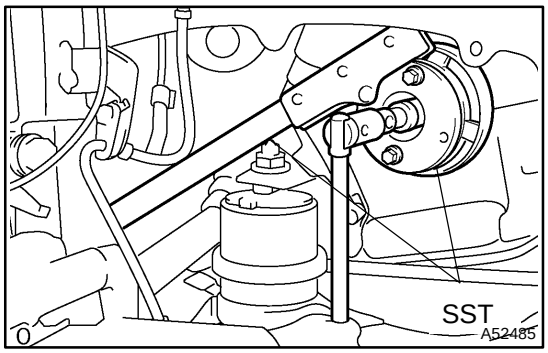

8. **REMOVE CRANKSHAFT PULLEY**

(a) TMC made:
Remove the crankshaft pulley.
(1) Using SST, loosen the pulley bolt.
SST 09213−54015 (91651−60855), 09330−00021

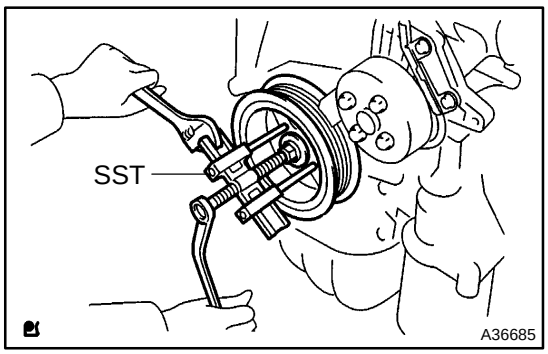

(2) Using SST, remove the pulley bolt and pulley.
SST 09950−50013 (09951−05010, 09952−05010, 09953−05020, 09954−05021)

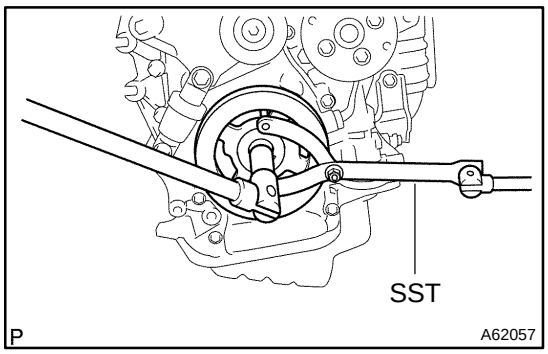

(b) TMMK made:
Remove the crankshaft pulley.
(1) Using SST, loosen the pulley bolt.
SST 09960−10010 (09962−01000, 09963−01000)

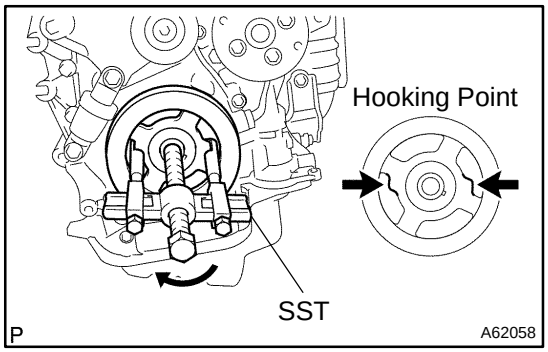

(2) Using SST, remove the crankshaft pulley.
SST 09950−40011 (09951−04010, 09952−04010, 09953−04030, 09954−04010, 09955−04041, 09957−04010, 91111−51014)

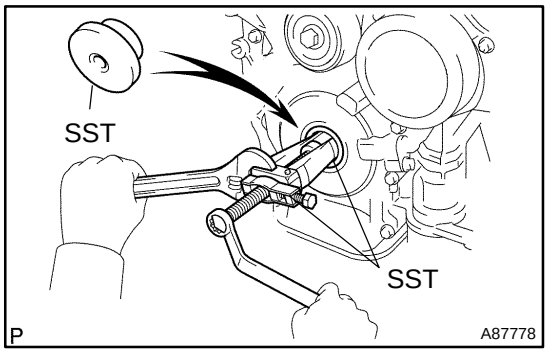

9. REMOVE TIMING GEAR CASE OR TIMING CHAIN CASE OIL SEAL

(a) Using SST, remove the oil seal.
SST 09308−10010, 09950−60010 (09951−00200)

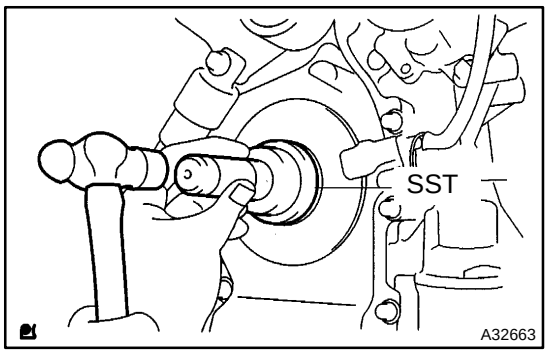

10. INSTALL TIMING GEAR CASE OR TIMING CHAIN CASE OIL SEAL

(a) Apply MP grease to a new oil seal lip.

NOTICE:

Keep the lip free from foreign matter.

(b) Using SST and a hammer, tap in the oil seal until its surface is flush with the rear oil seal retainer edge.
SST 09223−22010

NOTICE:

Wipe off extra grease from the crankshaft.

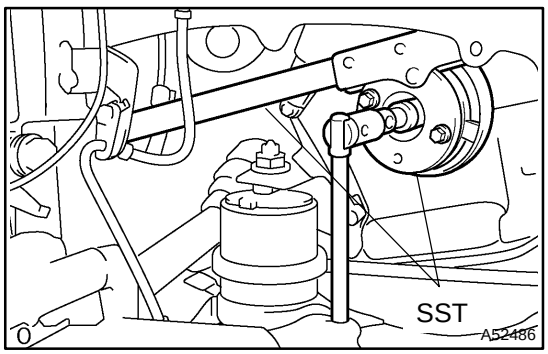

11. INSTALL CRANKSHAFT PULLEY

(a) TMC made:
Install the crankshaft pulley.
(1) Align the pulley set key with the key groove of the pulley.
(2) Using SST, install the pulley bolt.
SST 09213−54015 (91651−60855), 09330−00021, 09960−10010 (09962−01000, 09963−01000)
Torque: 170 N·m (1,733 kgf·cm, 125 ft·lbf)

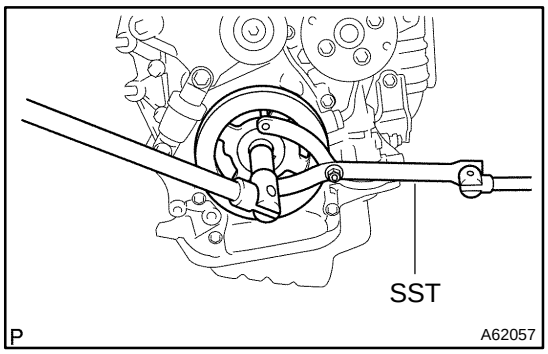

(b) TMMK made:
Install the crankshaft pulley.
(1) Align the pulley set key with the key groove of the pulley.
(2) Using SST, install the pulley bolt.
SST 09960−10010 (09962−01000, 09963−01000)
Torque: 170 N·m (1,733 kgf·cm, 125 ft·lbf)

12. INSTALL FAN AND GENERATOR V BELT (See page 14−5)
13. INSTALL ENGINE MOUNTING BRACKET NO.2 RH
Torque: 52 N·m (531 kgf·cm, 38 ft·lbf)
14. INSTALL ENGINE MOUNTING STAY NO.2 RH
Torque: 64 N·m (653 kgf·cm, 47 ft·lbf)

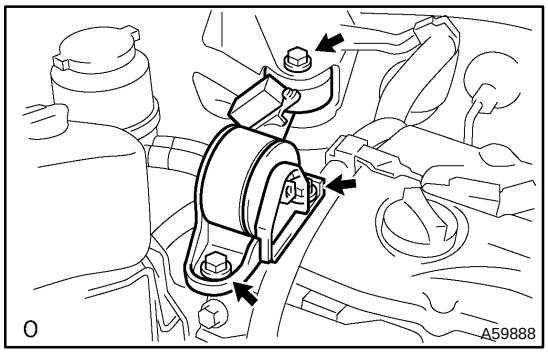

15. INSTALL ENGINE MOVING CONTROL ROD W/BRACKET
(a) Install the control rod with the 3 bolts.
Torque: 64 N·m (653 kgf·cm, 47 ft·lbf)

16. INSTALL FRONT WHEEL RH
17. CHECK FOR ENGINE OIL LEAKS

ENGINE REAR OIL SEAL (2AZ−FE)(From July, 2003)

141IZ−02

REPLACEMENT

1. SEPARATE AUTOMATIC TRANSAXLE ASSY (A/T) (See page 40−18)

HINT:

Remove the transaxle after removing the engine assy w/ transaxle.

2. SEPARATE MANUAL TRANSAXLE ASSY (M/T) (See page 41−11)

HINT:

Remove the transaxle after removing the engine assy w/ transaxle.

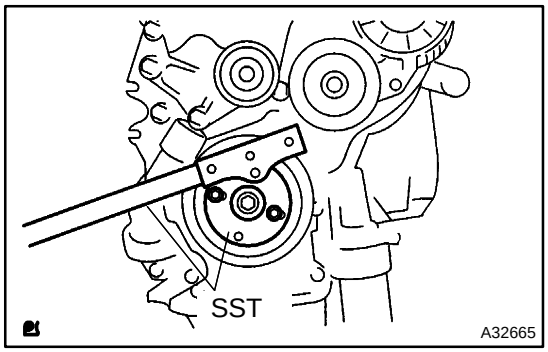

3. REMOVE DRIVE PLATE & RING GEAR SUB−ASSY

(a) TMC made:

Using SST, fix the crankshaft.

SST 09213−54015 (91651−60855), 09330−00021

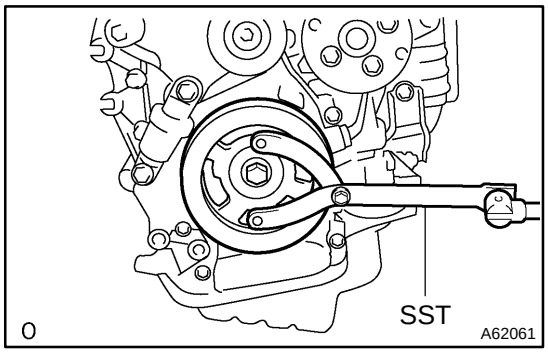

(b) TMMK made:

Using SST, fix the crankshaft.

SST 09960−10010 (09962−01000, 09963−01000)

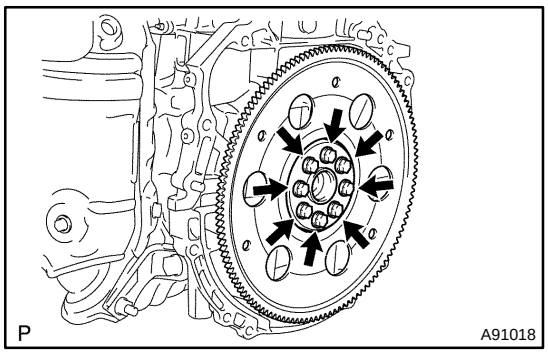

(c) Remove the 8 bolts, rear spacer, drive plate and front spacer.

4. REMOVE CLUTCH COVER ASSY (M/T) (See page 42−15)

5. REMOVE CLUTCH DISC ASSY (M/T) (See page 42−15)

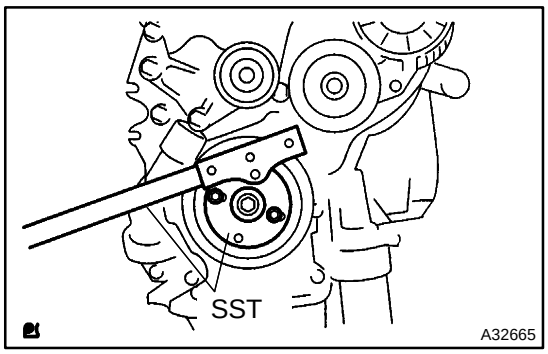

6. REMOVE FLYWHEEL SUB−ASSY (M/T)

(a) Using SST, fix the crankshaft.
SST 09213−54015 (91651−60855), 09330−00021

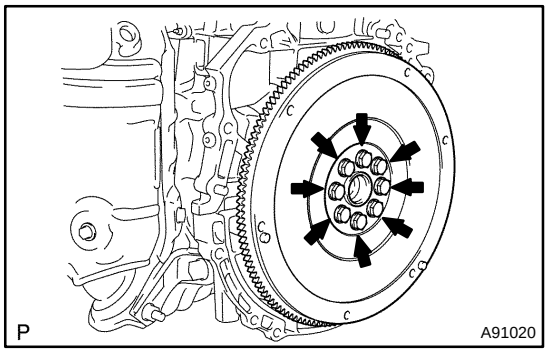

(b) Remove the 8 bolts and flywheel.

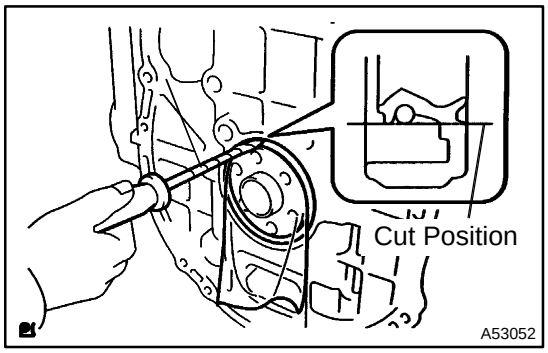

7. REMOVE ENGINE REAR OIL SEAL

(a) Using a knife, cut through the oil seal lip.

(b) Using a screwdriver with its tip taped, pry out the oil seal.

NOTICE:

After the removal, check the crankshaft for damage. If it is damaged, smooth the surface with 400−grit sandpaper.

.

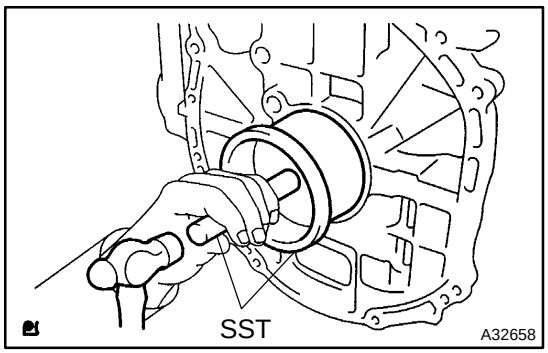

8. INSTALL ENGINE REAR OIL SEAL

(a) Apply MP grease to a new oil seal lip.

NOTICE:

Keep the lip free from foreign matter.

(b) Using SST and a hammer, tap in the oil seal until its surface is flush with the rear oil seal retainer edge.
SST 09223−15030, 09950−70010 (09951−07100)

NOTICE:

Wipe off extra grease from the crankshaft.

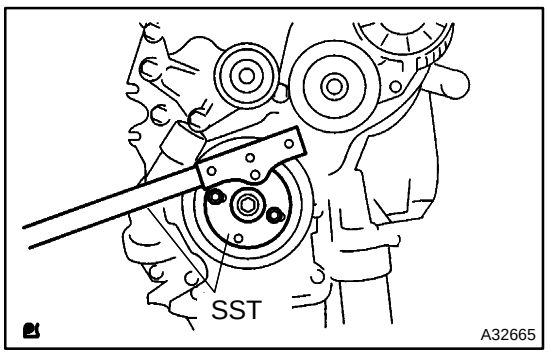

9. INSTALL DRIVE PLATE & RING GEAR SUB−ASSY (A/T)

(a) TMC made:
Using SST, fix the crankshaft.
SST 09213−54015 (91651−60855), 09330−00021

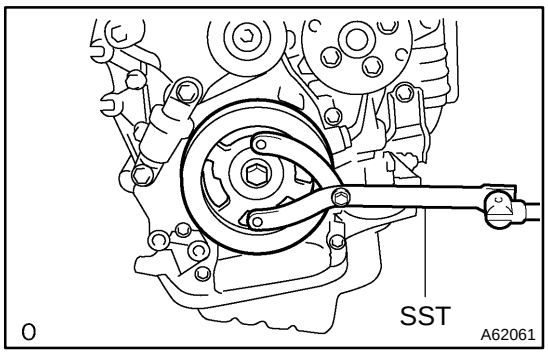

(b) TMMK made:
Using SST, fix the crankshaft.
SST 09960−10010 (09962−01000, 09963−01000)

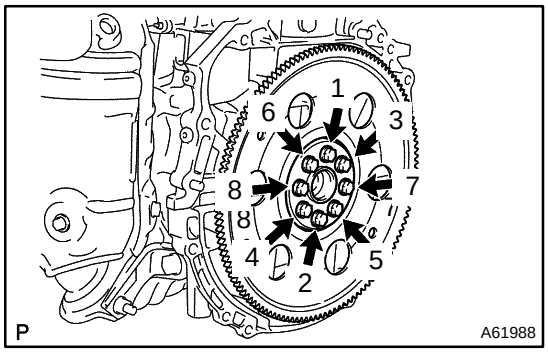

(c) Clean the bolt and the bolt hole.
(d) Apply adhesive to 2 or 3 threads of the bolt end.
Adhesive:
Part No. 08833−00070, THREE BOND or equivalent
(e) Install the front spacer, drive plate and rear spacer with 8 bolts. Uniformly tighten the 8 bolts in the sequence shown in the illustration.
Torque: 98 N·m (1,000 kgf·cm, 72 ft·lbf)

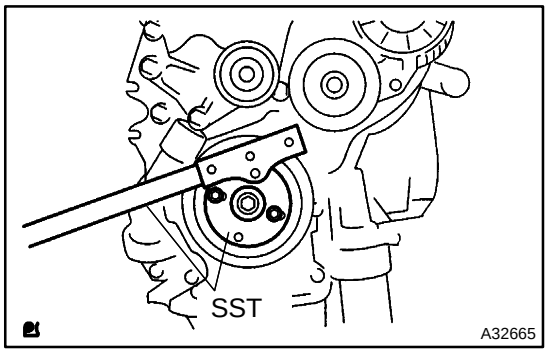

10. INSTALL FLYWHEEL SUB−ASSY
(a) Using SST, fix the crankshaft.
SST 09213−54015 (91651−60855), 09330−00021

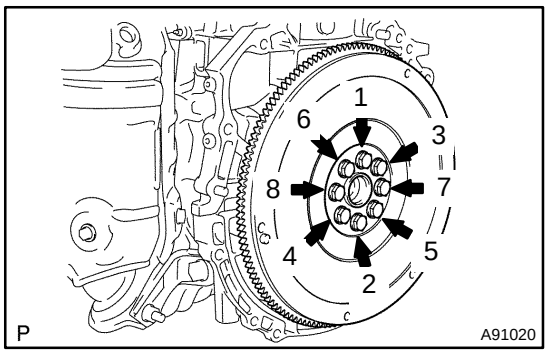

(b) Clean the bolt and the bolt hole.
(c) Apply adhesive to 2 or 3 threads of the bolt end.
Adhesive:
Part No. 08833−00070, THREE BOND or equivalent
(d) Install the flywheel with 8 bolts. Uniformly tighten the 8 bolts in the sequence shown in the illustration.
Torque: 130 N·m (1,330 kgf·cm, 96 ft·lbf)

11. INSTALL CLUTCH DISC ASSY (M/T) (See page 42−15)
12. INSTALL CLUTCH COVER ASSY (M/T) (See page 42−15)
13. INSTALL AUTOMATIC TRANSAXLE ASSY (A/T) (SeePage 40−18)
14. INSTALL MANUAL TRANSAXLE ASSY (M/T) (See page 41−11)

CYLINDER HEAD ASSY (2AZ−FE)(From July, 2003)

141ID−02

COMPONENTS

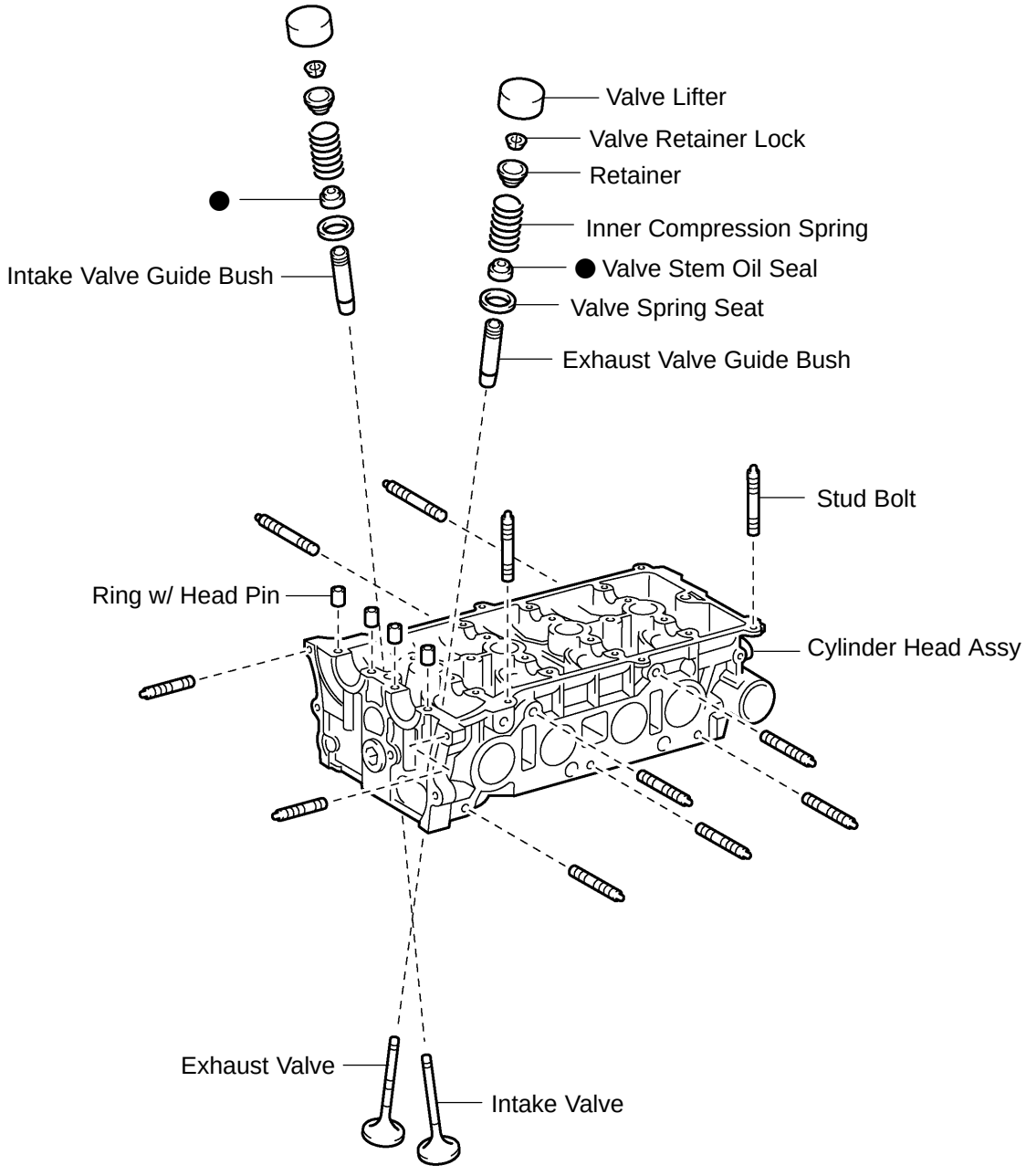

● Non−reusable part

A77366

OVERHAUL

1. REMOVE VALVE LIFTER

HINT:

Arrange the valve lifters in the correct order.

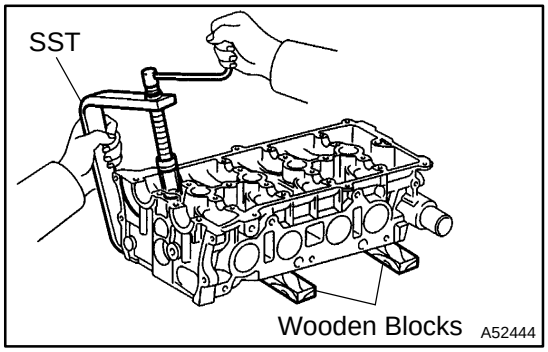

2. REMOVE INTAKE VALVE

(a) Using SST and wooden blocks, compress and remove the 8 valve spring retainer locks.
SST 09202−70020 (09202−00010)

(b) Remove the retainer, valve spring and valve.

HINT:

Arrange the removed parts in the correct order.

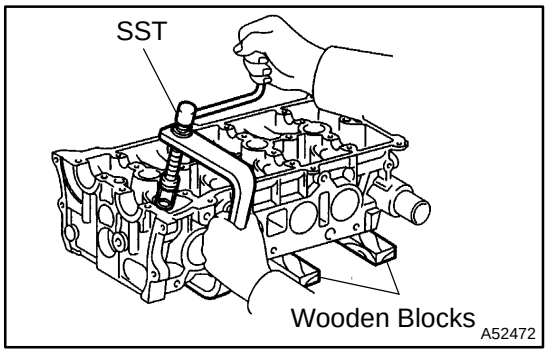

3. REMOVE EXHAUST VALVE

(a) Using SST and wooden blocks, compress and remove the 8 valve spring retainer locks.
SST 09202−70020 (09202−00010)

(b) Remove the retainer, valve spring and valve.

HINT:

Arrange the removed parts in the correct order.

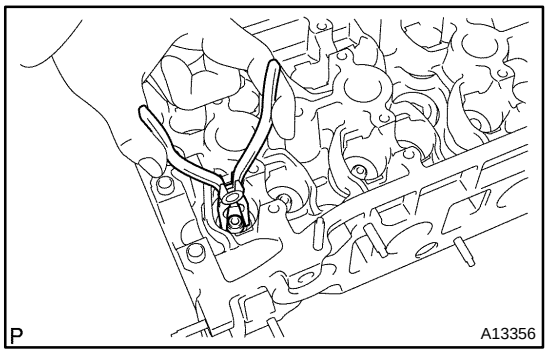

4. REMOVE VALVE STEM OIL O SEAL OR RING

(a) Using needle−nose pliers, remove the oil seals.

5. REMOVE VALVE SPRING SEAT

6. REMOVE STUD BOLT

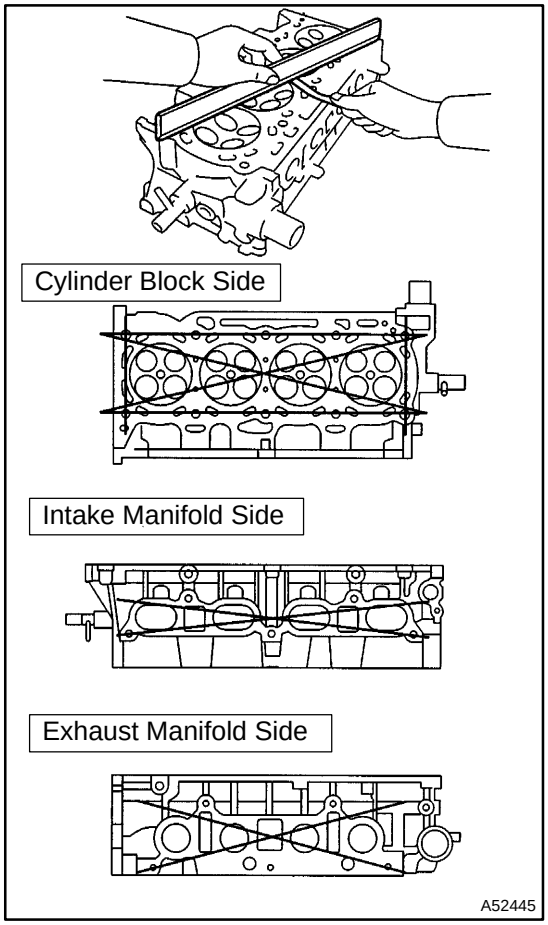

7. INSPECT CYLINDER HEAD FOR FLATNESS

(a) Using a precision straight edge and a feeler gauge, measure the surface contacting the cylinder block and the manifolds for warpage.

Maximum warpage:

Item	Specified Condition
Cylinder block side	0.05 mm (0.0020 in.)
Intake manifold side	0.08 mm (0.0031 in.)
Exhaust manifold side	0.08 mm (0.0031 in.)

If the warpage is greater than the maximum, replace the cylinder head.

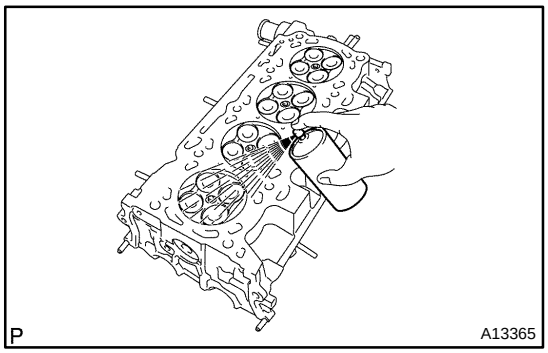

8. INSPECT CYLINDER HEAD FOR CRACKS

(a) Using a dye penetrate, check the intake ports, exhaust ports and cylinder surface for cracks.

If cracked, replace the cylinder head.

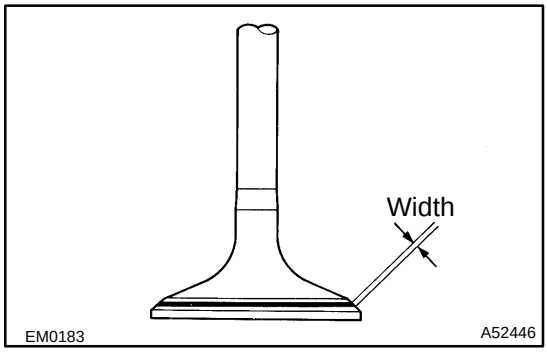

9. INSPECT VALVE SEATS

(a) Apply a light coat of prussian blue (or white lead) to the valve face.

(b) Lightly press the valve face against the valve seat.

(c) Check the valve face and valve seat according to the following procedure.

(1) If blue appears 360● around the valve face, the valve face is concentric. If not, replace the valve.

(2) If blue appears 360● around the valve seat, the guide and valve face are concentric. If not, resurface the valve seat.

(3) Check that the valve seat contact is in the middle of the valve face with the width between 1.0 to 1.4 mm (0.039 to 0.055 in.).

10. REPAIR VALVE SEATS

NOTICE:

Keep the lip free from foreign matter.

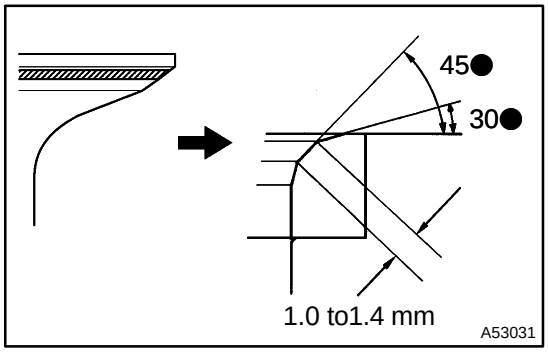

(a) If the seating is too high on the valve face, use 30° and 45° cutters to correct the seat.

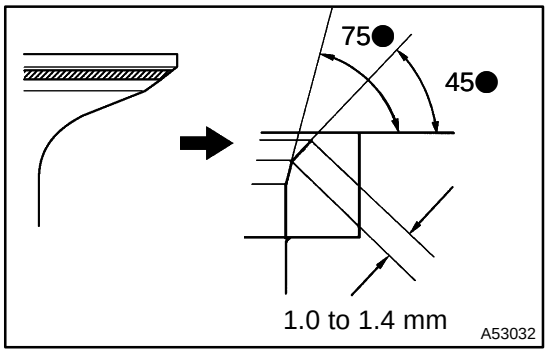

(b) If the seating is too low on the valve face, use 75° and 45° cutters to correct the seat.

(c) Hand−lap the valve and valve seat with an abrasive compound.

(d) Check the valve seating position.

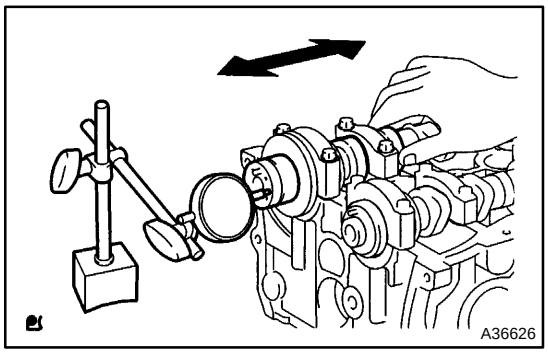

11. INSPECT CAMSHAFT THRUST CLEARANCE

(a) Install the camshafts.

(b) Using a dial indicator, measure the thrust clearance while moving the camshaft back and forth.

Specified thrust clearance:

Item	Specified Condition
Intake	0.040 to 0.110 mm (0.0016 to 0.0043 in.)
Exhaust	0.080 to 0.150 mm (0.0032 to 0.0059 in.)

If the thrust clearance is greater than the maximum, replace the cylinder head. If the thrust surface is damaged, replace the camshaft.

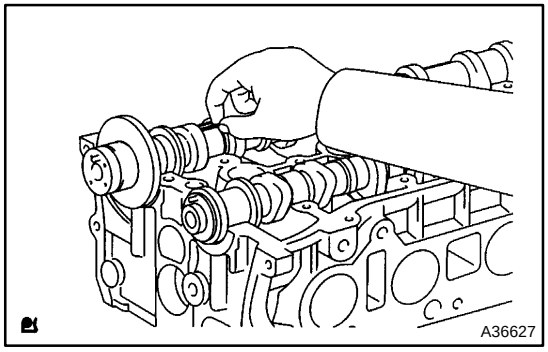

12. INSPECT CAMSHAFT OIL CLEARANCE

(a) Clean the bearing caps and camshaft journals.

(b) Place the camshafts on the cylinder head.

(c) Lay a strip of plastigage across each of the camshaft journal.

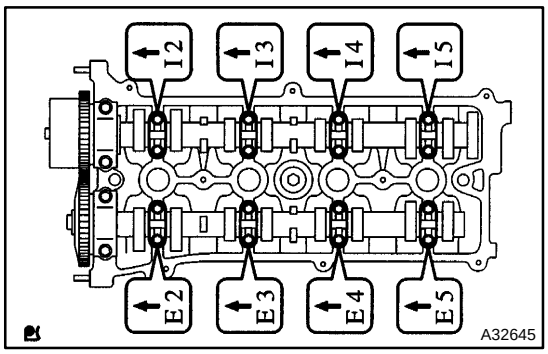

(d) Install the bearing caps.

Torque:

30 N·m (301 kgf·cm, 22 ft·lbf) for No. 1 bearing cap

30 N·m (301 kgf·cm, 22 ft·lbf) for No. 2 bearing cap

9.0 N·m (92 kgf·cm, 80 in.·lbf) for No. 3 bearing cap

NOTICE:

Do not turn the camshaft.

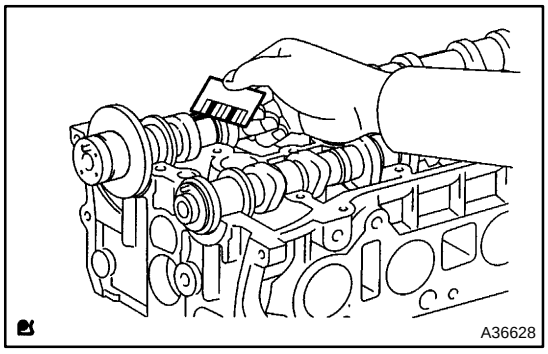

(e) Remove the bearing cap, and measure the plastigage at its widest point.

Specified oil clearance:

Item	Specified Condition
Intake No. 1 journal bearing mark 1	0.007 to 0.070 mm (0.0003 to 0.0028 in.)
Intake No. 1 journal bearing mark 2	0.008 to 0.070 mm (0.0003 to 0.0028 in.)
Intake No. 1 journal bearing mark 3	0.008 to 0.070 mm (0.0003 to 0.0028 in.)
Other journals	0.025 to 0.100 mm (0.0010 to 0.0039 in.)
Exhaust No. 1 journal	0.040 to 0.100 mm (0.0016 to 0.0039 in.)
Other journals	0.025 to 0.100 mm (0.0010 to 0.0039 in.)

NOTICE:

Completely remove the plastigage after the inspection.

If the oil clearance is greater than the maximum, replace the camshaft. If necessary, replace the cylinder head.

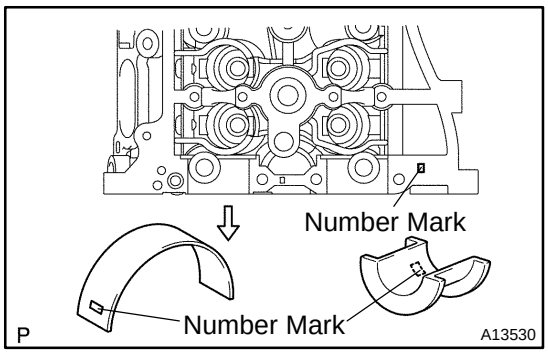

If the oil clearance on the No.1 journal is greater than the maximum, choose a new bearing and install it.

HINT:

Cylinder head journal bore diameter

Mark 1	40.000 to 40.009 mm (1.5748 to 1.5752 in.)
Mark 2	40.009 to 40.017 mm (1.5752 to 1.5755 in.)
Mark 3	40.017 to 40.025 mm (1.5755 to 1.5758 in.)

Standard bearing center wall thickness

Mark 1	2.000 to 2.004 mm (0.0787 to 0.0789 in.)
Mark 2	2.004 to 2.008 mm (0.0789 to 0.0791 in.)
Mark 3	2.008 to 2.012 mm (0.0791 to 0.0792 in.)

Camshaft journal diameter:

35.971 to 35.985 mm (1.4162 to 1.4167 in.)

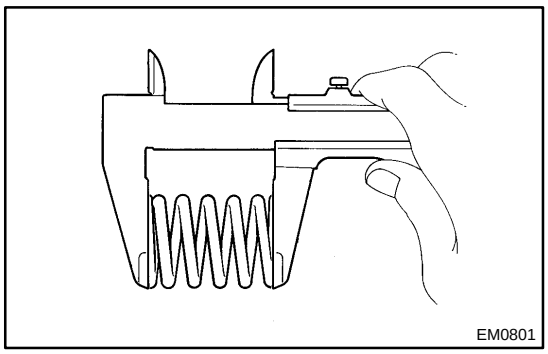
EM0801

13. INSPECT INNER COMPRESSION SPRING

(a) Using a vernier caliper, measure the free length of the valve spring.

Free length: 45.7 mm (1.799 in.)

If the free length is not as specified, replace the valve spring.

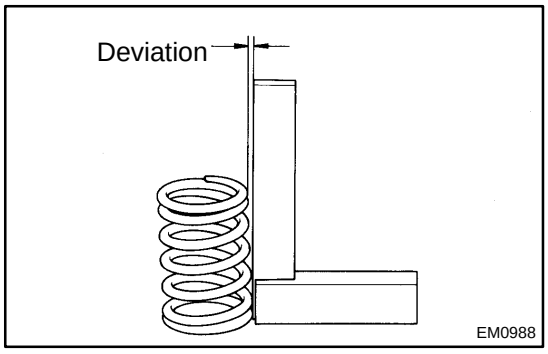

EM0988

(b) Using steel squares, measure the deviation of the valve spring.

Maximum deviation: 1.6 mm (0.063 in.)

If the deviation is greater than the maximum, replace the valve spring.

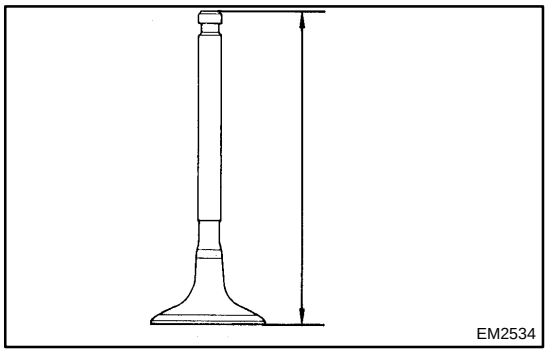
EM2534

14. INSPECT INTAKE VALVE

(a) Using a vernier caliper, measure the valve overall length.

Specified overall length:
101.21 to 101.71 mm (3.9846 to 4.0043 in.)

If the overall length is less than the minimum, replace the valve.

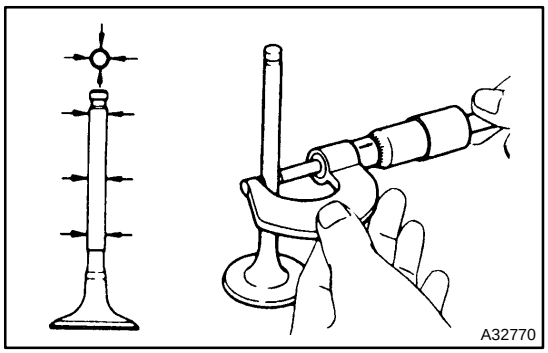
A32770

(b) Using a micrometer, measure the diameter of the valve stem.

Valve stem diameter:
5.470 to 5.485 mm (0.2154 to 0.2159 in.)

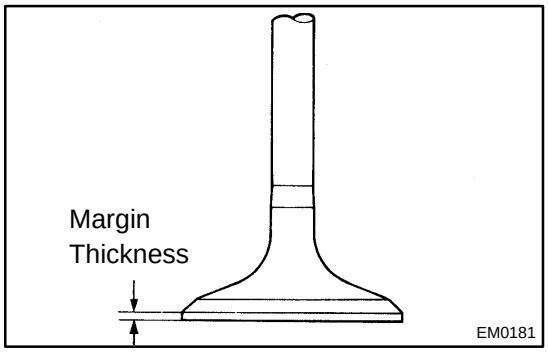

EM0181

(c) Using a vernier caliper, measure the valve head margin thickness.

Specified margin thickness:
0.50 to 1.45 mm (0.0197 to 0.0571 in.)

If the margin thickness is less than the minimum, replace the valve.

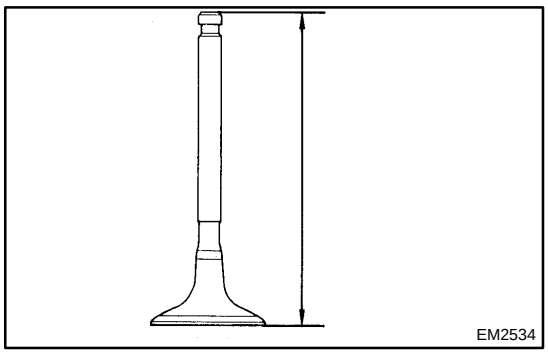

15. INSPECT EXHAUST VALVE

(a) Using a vernier caliper, measure the valve overall length.

Specified overall length:
100.70 to 101.15 mm (3.9646 to 3.9823 in.)

If the overall length is less than the minimum, replace the valve.

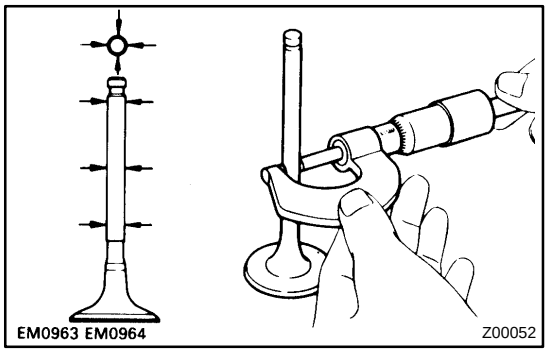

(b) Using a micrometer, measure the diameter of the valve stem.

Valve stem diameter:
5.465 to 5.480 mm (0.2152 to 0.2157 in.)

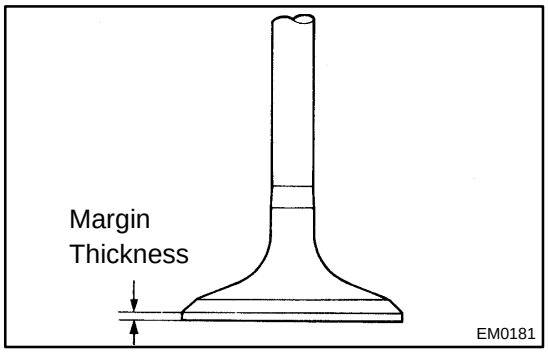

(c) Using a vernier caliper, measure the valve head margin thickness.

Specified margin thickness:
0.50 to 1.60 mm (0.0197 to 0.0630 in.)

If the margin thickness is less than the minimum, replace the valve.

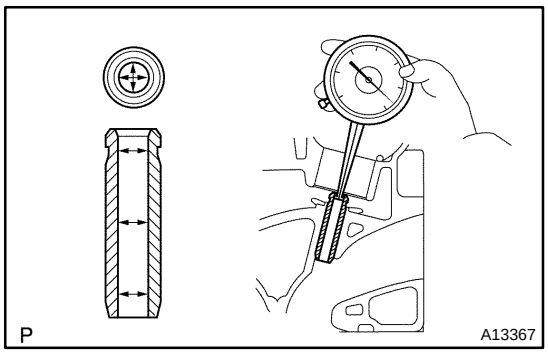

16. INSPECT INTAKE VALVE GUIDE BUSH

(a) Using a caliper gauge, measure the inside diameter of the guide bush.

Bushing inside diameter:
5.510 to 5.530 mm (0.2169 to 0.2177 in.)

(b) Subtract the valve stem diameter measurement from the guide bush inside diameter measurement.

Specified oil clearance:
0.025 to 0.080 mm (0.0010 to 0.0031 in.)

If the clearance is greater than the maximum, replace the valve and guide bush (see steps 18 and 20).

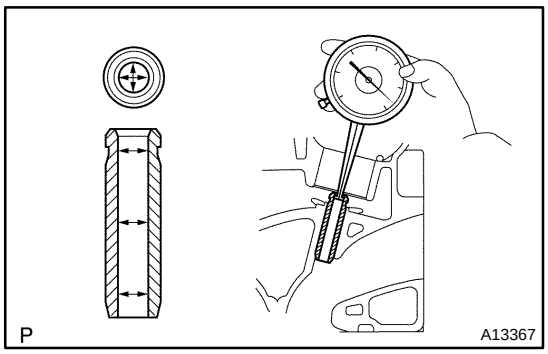

17. INSPECT EXHAUST VALVE GUIDE BUSH

(a) Using a caliper gauge, measure the inside diameter of the guide bush.

Bushing inside diameter:
5.510 to 5.530 mm (0.2169 to 0.2177 in.)

(b) Subtract the valve stem diameter measurement from the guide bushing inside diameter measurement.

Specified oil clearance:
0.030 to 0.100 mm (0.0012 to 0.0039 in.)

If the clearance is greater than the maximum, replace the valve and guide bush (see steps 19 and 21).

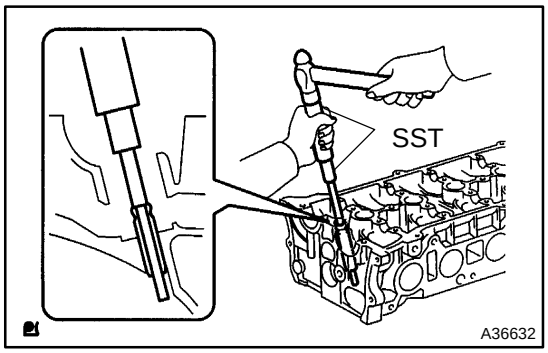

18. REMOVE INTAKE VALVE GUIDE BUSH

(a) Using SST and a hammer, tap out the guide bush.
SST 09201−10000 (09201−01050), 09950−70010 (09951−07100)

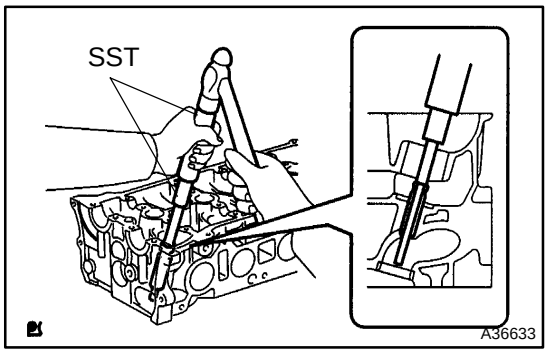

19. REMOVE EXHAUST VALVE GUIDE BUSH

(a) Using SST and a hammer, tap out the guide bush.
SST 09201−10000 (09201−01050), 09950−70010 (09951−07100)

20. INSTALL INTAKE VALVE GUIDE BUSH

Using a caliper gauge, measure the bush bore diameter of the cylinder head.

Diameter: 10.285 to 10.306 mm (0.4049 to 0.4057 in.)

Install the STD bush if the diameter is within the specified diameter.

Specified diameter:
10.333 to 10.344 mm (0.4068 to 0.4072 in.)

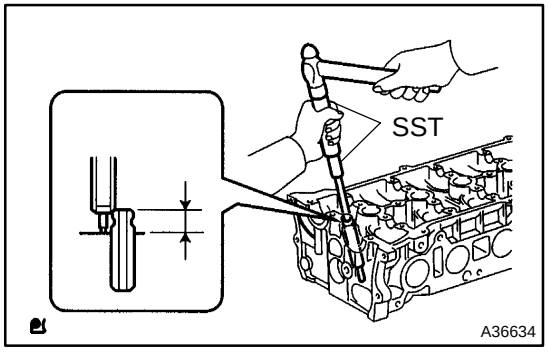

(a) Using SST and a hammer, tap in a new guide bush to the specified protrusion height.

Protrusion height:
9.6 to 10.0 mm (0.3779 to 0.3937 in.)

SST 09201−10000 (09201−01050), 09950−70010 (09951−07100)

(b) Using a sharp 5.5 mm reamer, ream the guide bush to obtain the standard specified clearance between the guide bush and valve stem.
Standard oil clearance:
0.025 to 0.060 mm (0.0010 to 0.0024 in.)

21. INSTALL EXHAUST VALVE GUIDE BUSH

(a) Using a caliper gauge, measure the bush bore diameter of the cylinder head.
Diameter: 10.285 to 10.306 mm (0.4049 to 0.4057 in.)

(b) Install the STD bush if the diameter is within the specified diameter.
Specified diameter:
10.333 to 10.344 mm (0.4068 to 0.4072 in.)

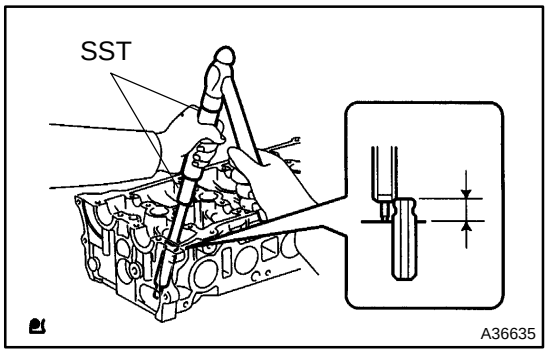

(c) Using SST and a hammer, tap in a new guide bush to the specified protrusion height.
Protrusion height:
9.6 to 10.0 mm (0.3779 to 0.3937 in.)

(d) Using a sharp 5.5 mm reamer, ream the guide bush to obtain the standard specified clearance between the guide bush and valve stem.
SST 09201−10000 (09201−01050), 09950−70010 (09951−07100)
Standard oil clearance:
0.030 to 0.065 mm (0.0012 to 0.0026 in.)

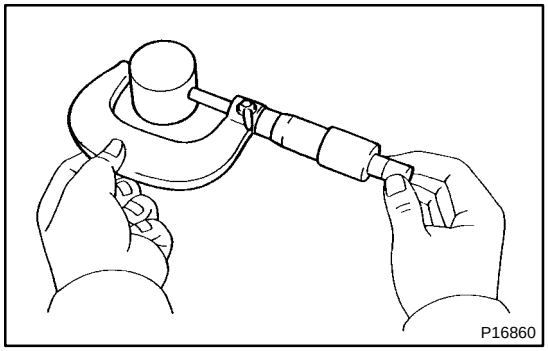

22. INSPECT VALVE LIFTER

(a) Using a micrometer, measure the lifter diameter.
Lifter diameter:
30.966 to 30.976 mm (1.2191 to 1.2195 in.)

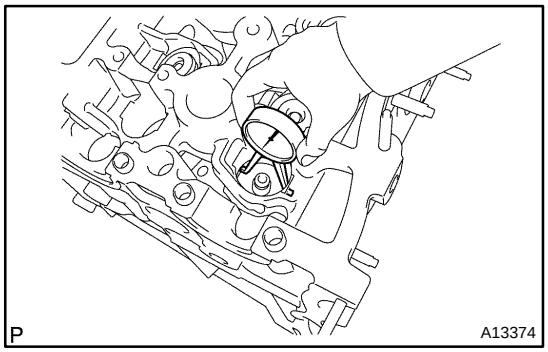

(b) Using a caliper gauge, measure the lifter bore diameter of the cylinder head.
Lifter bore diameter:
31.009 to 31.025 mm (1.2208 to 1.2215 in.)

(c) Subtract the lifter diameter measurement from the lifter bore diameter measurement.
Specified oil clearance:
0.033 to 0.070 mm (0.0013 to 0.0028 in.)

If the oil clearance is greater than the maximum, replace the lifter. If necessary, replace the cylinder head.

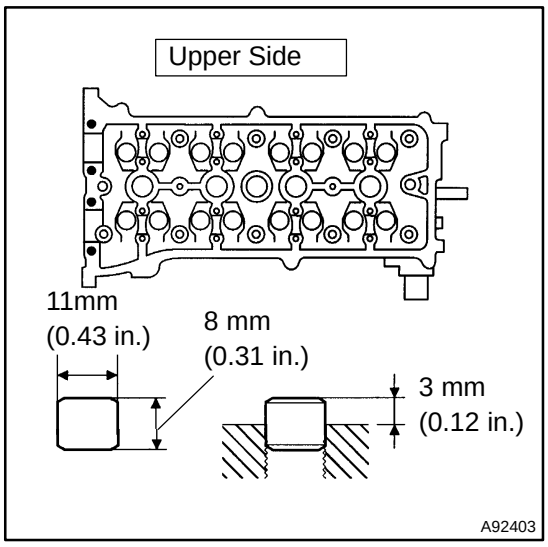

23. INSTALL RING W/HEAD PIN

(a) Using a plastic−faced hammer, tap in a new ring pin to the specified protrusion height.
Protrusion height: 3 mm (0.12 in.)

24. INSTALL STUD BOLT

Torque:
5 N·m (51 kgf·cm, 44 in.·lbf) for bolt A
5 N·m (51 kgf·cm, 44 in.·lbf) for bolt B
10 N·m (97 kgf·cm, 7 ft·lbf) for bolt C
10 N·m (97 kgf·cm, 7 ft·lbf) for bolt D

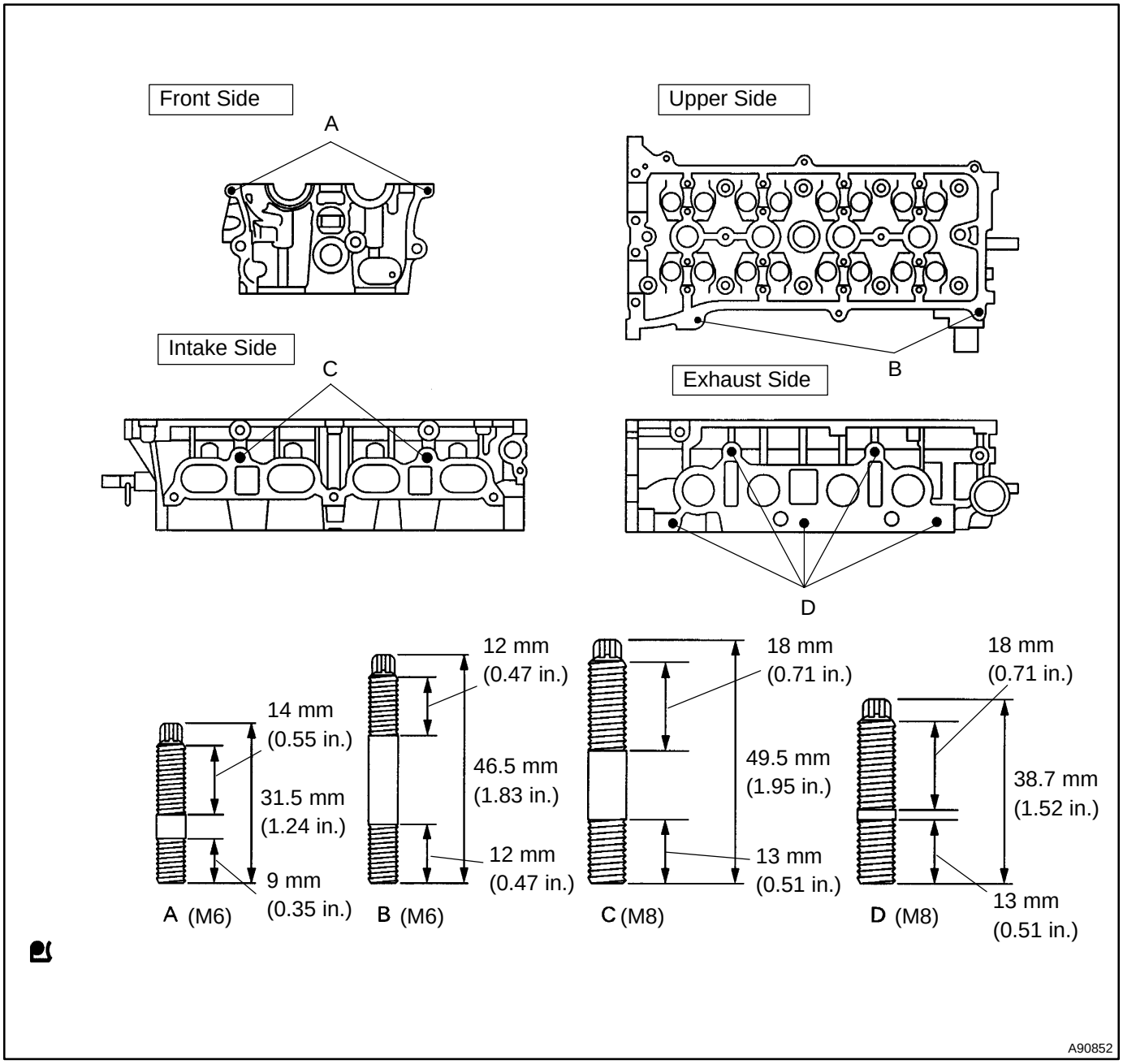

25. INSTALL VALVE SPRING SEAT

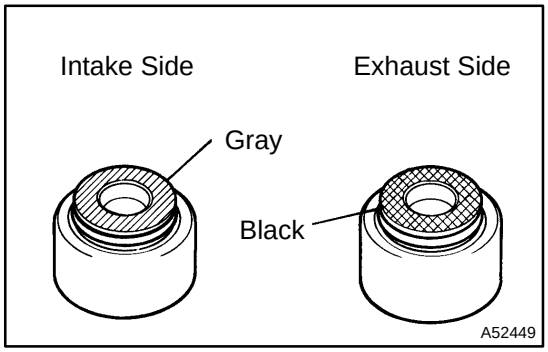

26. INSTALL VALVE STEM OIL O SEAL OR RING

(a) Apply a light coat of engine oil on a new oil seal.

NOTICE:

Pay close attention when installing the intake and exhaust oil seals. For example, installing the intake oil seal into the exhaust or installing the exhaust oil seal to the intake can cause installation problems later.

HINT:

The intake valve oil seal is gray and the exhaust valve oil seal is black.

(b) Using SST, push in the oil seal.

SST 09201−41020

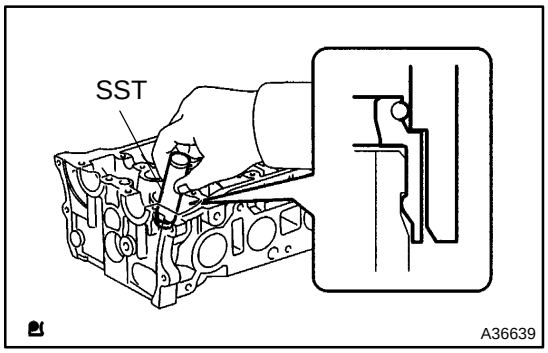

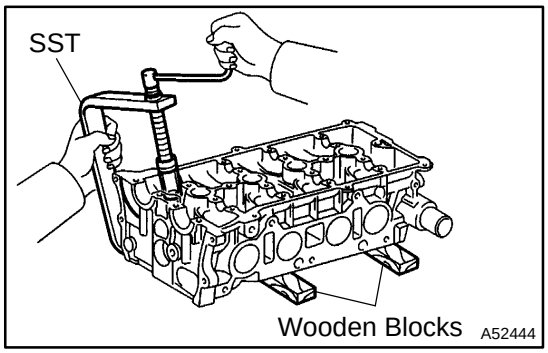

27. INSTALL INTAKE VALVE

(a) Install the valve, spring and retainer to the cylinder head.

(b) Using SST and wooden blocks, compress the spring and install the 2 retainer locks.

SST 09202−70020 (09202−00010)

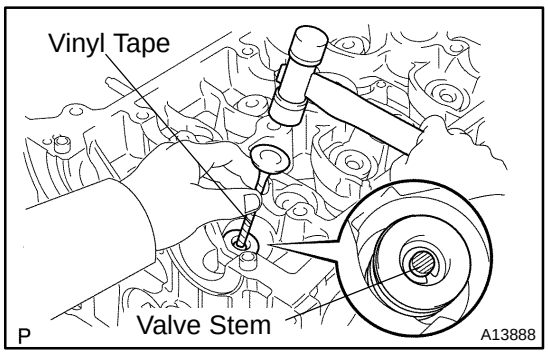

(c) Using a plastic−faced hammer and a discarded valve with its tip wrapped in tape, lightly tap the installed valve to ensure that it is securely fit.

NOTICE:

Be careful not to damage the valve stem tip.

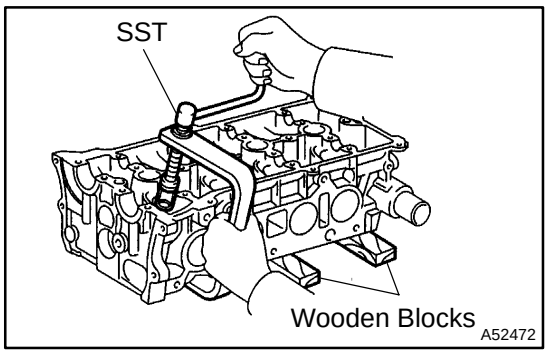

28. INSTALL EXHAUST VALVE

(a) Install the valve, spring and retainer to the cylinder head.

(b) Using SST and wooden blocks, compress the spring and install the 2 retainer locks.

SST 09202−70020 (09202−00010)

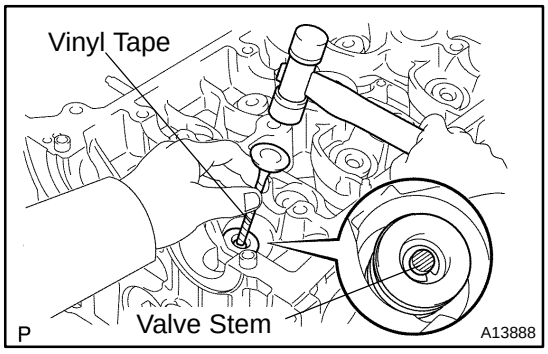

(c) Using a plastic−faced hammer and a discarded valve with its tip wrapped in tape, lightly tap the installed valve to ensure that it is securely fit.

NOTICE:

Be careful not to damage the valve stem tip.

29. INSTALL VALVE LIFTER

(a) Assemble the valve lifter and the tip of the valve stem with a light coat of engine oil applied.

NOTICE:

Install the valve lifters in their original places.

CYLINDER BLOCK ASSY (2AZ–FE)(From July, 2003)

141IF–02

COMPONENTS

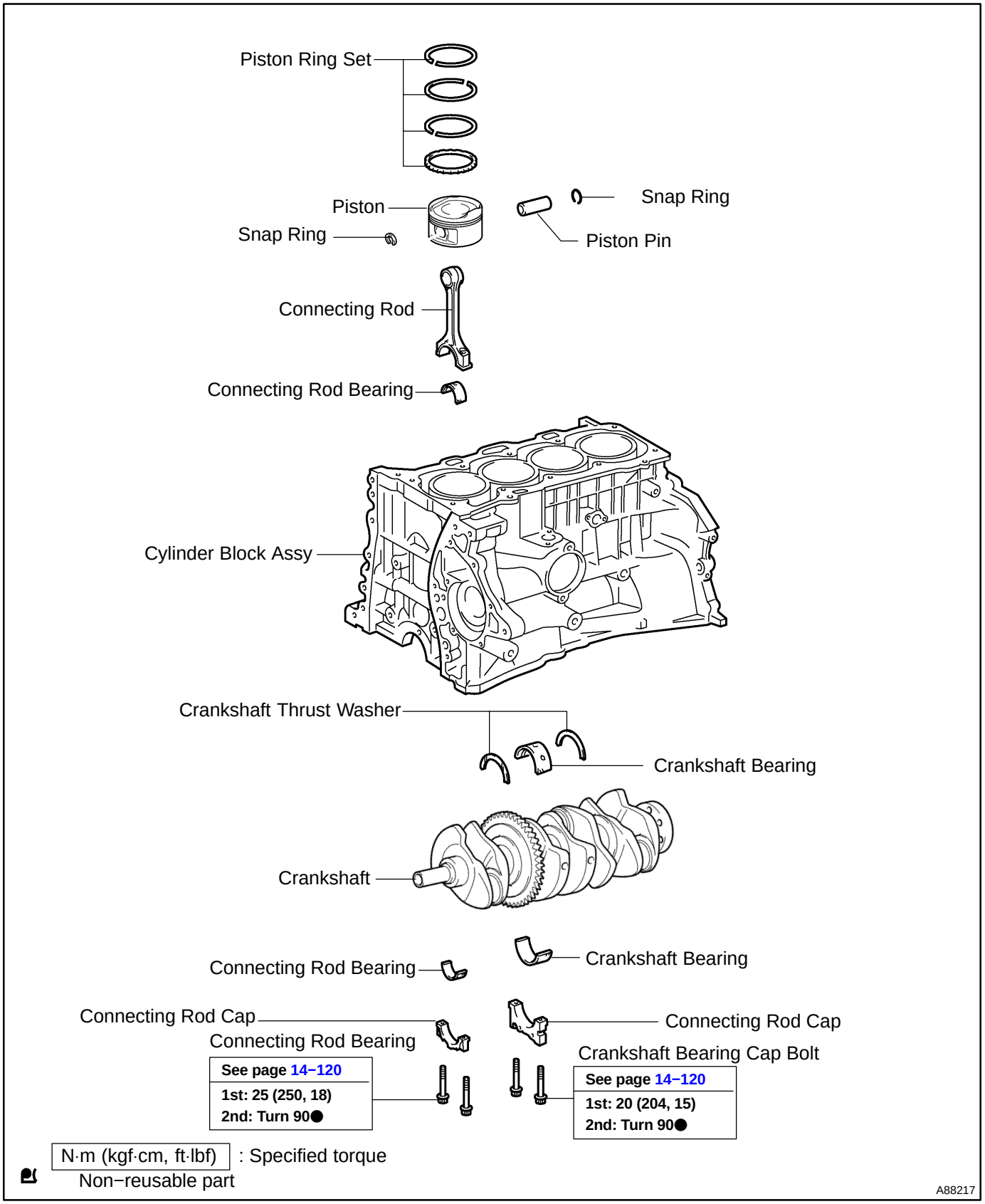

OVERHAUL

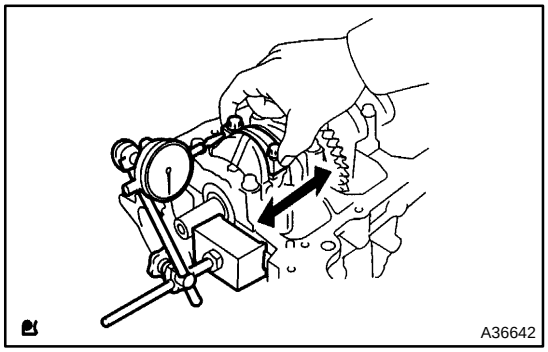

1. INSPECT CONNECTING ROD THRUST CLEARANCE

(a) Using a dial indicator, measure the thrust clearance while moving the connecting rod back and forth.

Specified thrust clearance:
0.160 to 0.362 mm (0.0063 to 0.0143 in.)

If the thrust clearance is greater than the maximum, replace the connecting rod assembly(s). If necessary, replace the crankshaft.

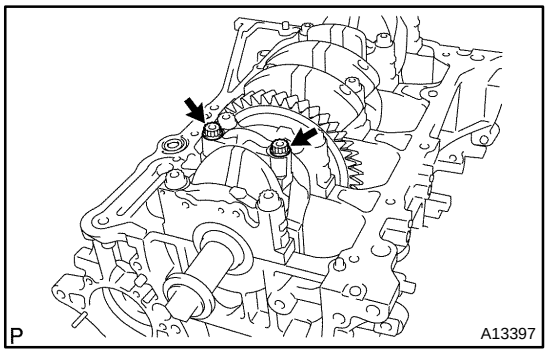

2. INSPECT CONNECTING ROD OIL CLEARANCE

HINT:

The connecting rod cap bolts are tightened in 2 progressive steps.

(a) Check that the matchmarks on the connecting rod and cap are aligned to ensure the correct reassembly.

HINT:

The matchmarks on the connecting rods and caps are for ensuring the correct reassembly.

(b) Remove the 2 connecting rod cap bolts.

(c) Using the 2 removed connecting rod cap bolts, remove the connecting rod cap and lower bearing by wiggling the connecting rod cap right and left.

HINT:

Keep the lower bearing inserted to the connecting rod cap.

(d) Clean the crank pin and bearing.

(e) Check the crank pin and bearing for pitting and scratches.

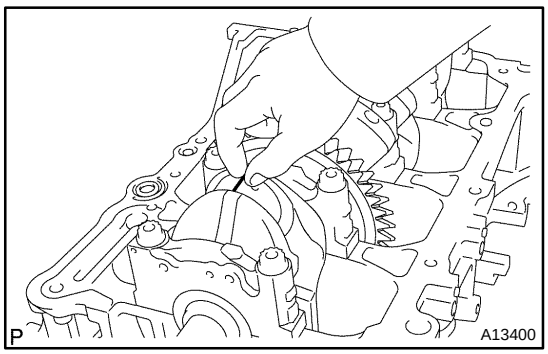

(f) Lay a strip of Plastigage on the crank pin.

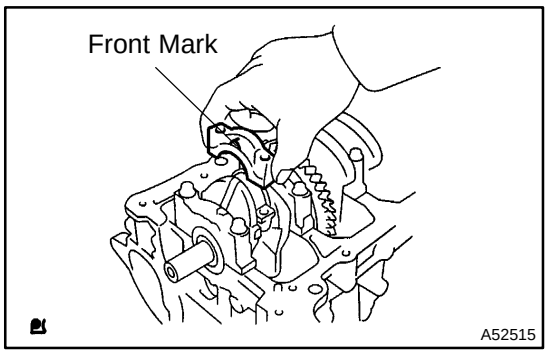

(g) Check that the front mark of the connecting rod cap is facing in the correct direction.
(h) Apply a light coat of engine oil on the threads and under the heads of the connecting rod cap bolts.
(i) Install the connecting cap (see step 37).

NOTICE:
Do not turn the crankshaft.

(j) Remove the 2 bolts and connecting rod cap.

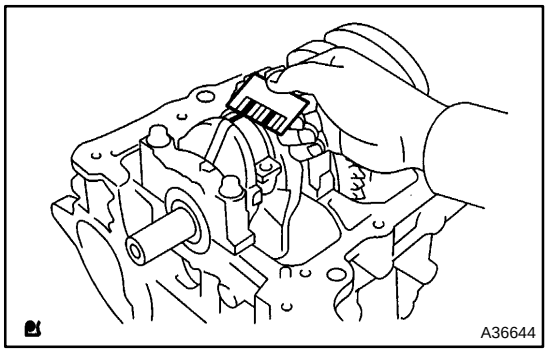

(k) Measure the Plastigage at its widest point.
Specified oil clearance:
0.024 to 0.080 mm (0.0009 to 0.0031 in.)

If the crank pin or bearing is damaged, replace the bearings. If necessary, replace the crankshaft.

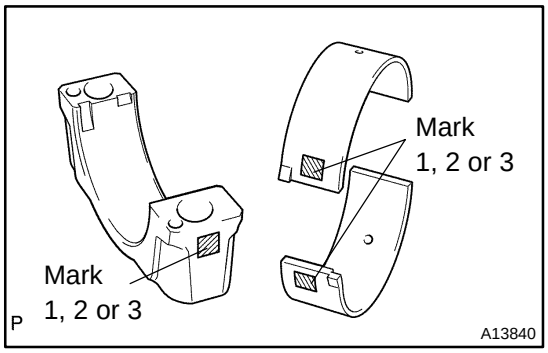

HINT:
If replacing a bearing, replace it with one that has the same number as the connecting rod. There are 3 sizes of standard bearings: 1, 2 and 3.

Standard bearing center wall thickness:

Mark 1	1.485 to 1.488 mm (0.0585 to 0.0586 in.)
Mark 2	1.488 to 1.491 mm (0.0586 to 0.0587 in.)
Mark 3	1.491 to 1.494 mm (0.0587 to 0.0588 in.)

(l) Completely remove the Plastigage.

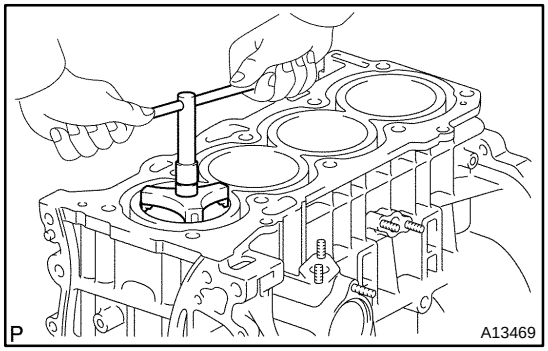

3. REMOVE PISTON SUB−ASSY W/CONNECTING ROD

(a) Using a ridge reamer, remove all the carbon from the top of the cylinder.
(b) Push the piston, connecting rod assembly and upper bearing through the top of the cylinder block.

HINT:
- Keep the bearing, connecting rod and cap together.
- Arrange the piston and connecting rod assemblies in the correct order.

4. REMOVE CONNECTING ROD BEARING

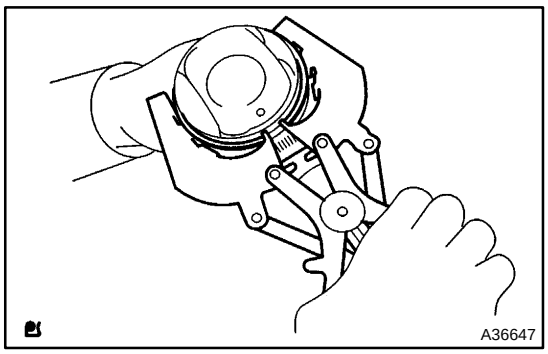

5. REMOVE PISTON RING SET

(a) Using a piston ring expander, remove the 2 compression rings.

(b) Remove the 2 side rails and oil ring by hand.

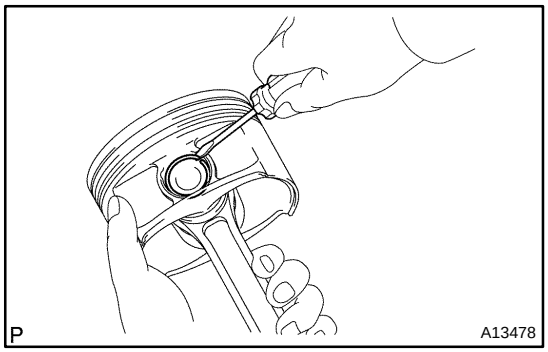

6. REMOVE PISTON PIN HOLE SNAP RING

(a) Using a small screwdriver, pry out the 2 snap rings.

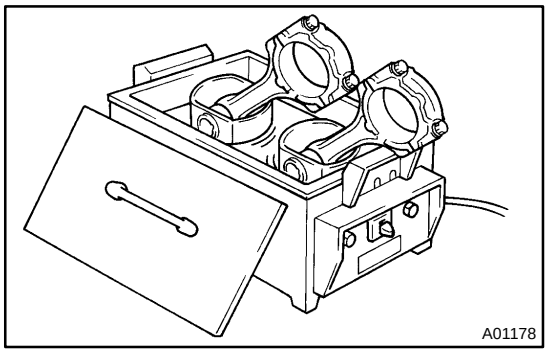

7. REMOVE PISTON

(a) Gradually heat the piston to approxinately 80 to 90 C (176 to 194 F).

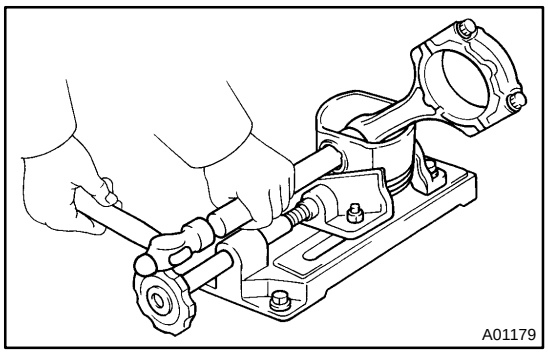

(b) Using a plastic−faced hammer and brass bar, lightly tap out the piston pin and remove the connecting rod.

HINT:

- The piston and pin are a matched set.
- Arrange the pistons, pins, rings, connecting rods and bearings in the correct order.

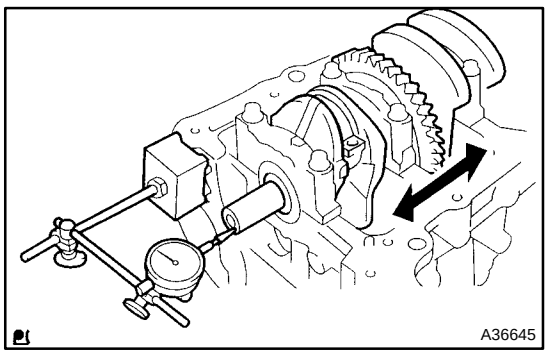

8. INSPECT CRANKSHAFT THRUST CLEARANCE

(a) Using a dial indicator, measure the thrust clearance while prying the crankshaft back and forth with a screwdriver.

Specified thrust clearance:

0.040 to 0.300 mm (0.0016 to 0.0118 in.)

If the thrust clearance is greater than the maximum, replace the thrust washers as a set.

Thrust washer thickness:

1.930 to 1.980 mm (0.0760 to 0.0780 in.)

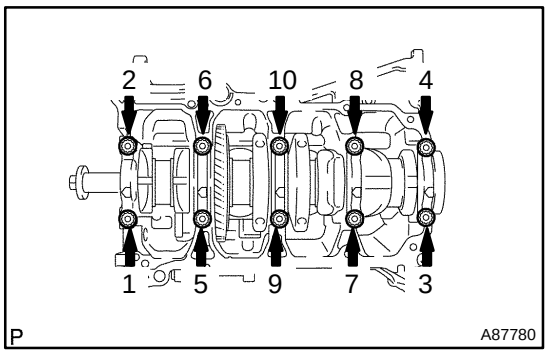

9. INSPECT CRANKSHAFT OIL CLEARANCE

(a) Uniformly loosen and remove the 10 main bearing cap bolts, in the sequence shown in the illustration.

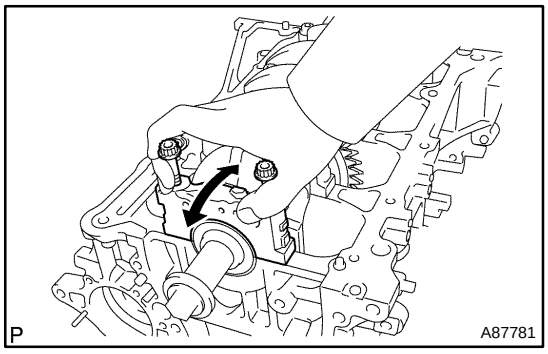

(b) Use 2 removed main bearing cap bolts to remove the 5 main bearing caps and 5 lower bearings.

NOTICE:

Insert the bolts into one of the caps. Ease the cap out by gently pulling up and applying force toward the front and back side of the cylinder block, as shown in the illustration. Take care not to damage the contact surfaces of the cap and cylinder block.

HINT:

- Keep the lower bearing and main bearing cap together.
- Arrange the main bearing caps in correct order.

(c) Lift out the crankshaft.

HINT:

Keep the upper bearings together with the cylinder block.

(d) Clean each main journal and bearing.

(e) Check each main journal and bearing for pitting and scratches.

If the journal or bearing is damaged, replace the bearings.

If necessary, replace the crankshaft.

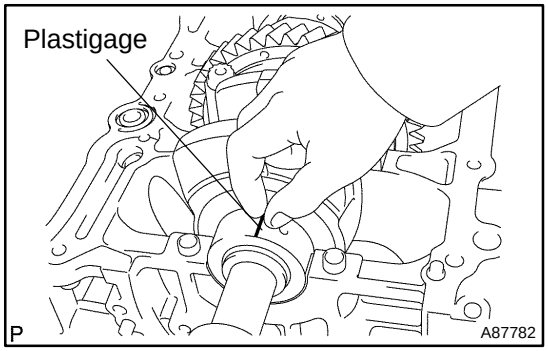

(f) Place the crankshaft on the cylinder block.

(g) Lay a strip of Plastigage across each journal.

(h) Install the main bearing caps (see step 36).

HINT:

Do not turn the crankshaft.

(i) Remove the main bearing cap (see steps (a) and (b) above).

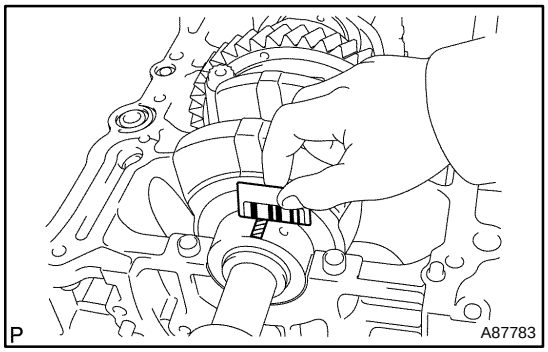

(j) Measure the Plastigage at its widest point.

Standard oil clearance:

0.008 to 0.024 mm (0.00031 to 0.00094 in.)

If the oil clearance is greater than the maximum, replace the bearings. If necessary, replace the crankshaft.

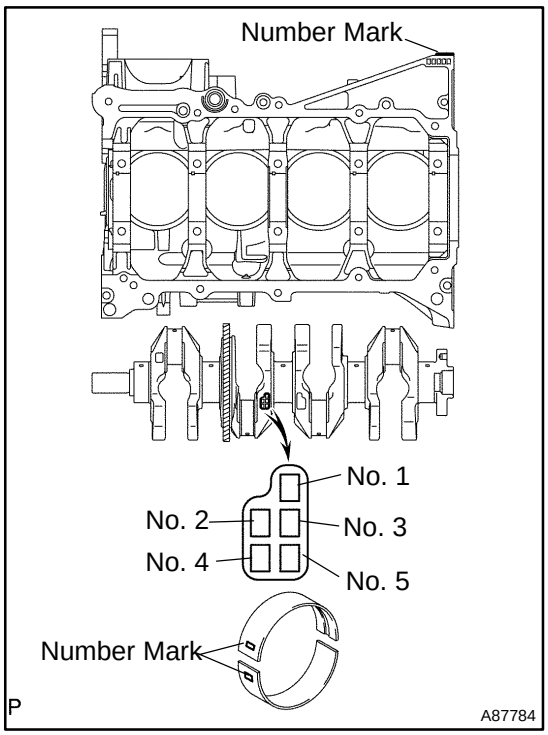

(k) If using a standard bearing, replace it with one having the same number. If the number of the bearing cannot be determined, select the correct bearing by adding together the numbers imprinted on the cylinder block and crankshaft, and then selecting the bearing according to the chart below. There are 4 sizes of standard bearings: 1, 2, 3, and 4.

Cylinder block (A) + Crankshaft (B)	0 to 2	3 to 5	6 to 8	9 to 11
Use bearing	1	2	3	4

HINT:
EXAMPLE
Cylinder block 4 (A) + Crankshaft 3 (B) =
Total number 7 (Use bearing 3)

Reference:

Item	Mark	Specified Condition
Cylinder block main journal bore diameter (A)	0	59.000 to 59.002 mm (2.3228 to 2.3229 in.)
	1	59.002 to 59.004 mm (2.3229 to 2.3230 in.)
	2	59.004 to 59.006 mm (2.3230 to 2.3231 in.)
	3	59.006 to 59.009 mm (2.3231 to 2.3232 in.)
	4	59.009 to 59.011 mm (2.3232 to 2.3233 in.)
	5	59.011 to 59.013 mm (2.3233 to 2.3234 in.)
	6	59.013 to 59.016 mm (2.3234 to 2.3235 in.)
Crankshaft main journal diameter (B)	0	54.998 to 55.000 mm (2.1653 to 2.1654 in.)
	1	54.996 to 54.998 mm (2.1652 to 2.1653 in.)
	2	54.994 to 54.996 mm (2.1651 to 2.1652 in.)
	3	54.992 to 54.994 mm (2.1650 to 2.1651 in.)
	4	54.990 to 54.992 mm (2.1650 to 2.1650 in.)
	5	54.988 to 54.990 mm (2.1649 to 2.1650 in.)
Standard bearing center wall thickness	1	1.993 to 1.996 mm (0.0785 to 0.0786 in.)
	2	1.996 to 1.999 mm (0.0786 to 0.0787 in.)
	3	1.999 to 2.002 mm (0.0787 to 0.0788 in.)
	4	2.002 to 2.005 mm (0.0788 to 0.0789 in.)

(l) Completely remove the Plastigage.

10. REMOVE CRANKSHAFT

(a) Lift out the crankshaft.

(b) Remove the 5 upper main bearings and 2 thrust washers from the cylinder block.

HINT:
Arrange the main bearings and thrust washers in the correct order.

11. REMOVE CRANKSHAFT THRUST WASHER UPPER

12. REMOVE CRANKSHAFT BEARING

HINT:
Arrange the bearings in the correct order.

13. REMOVE CRANKSHAFT BEARING NO.2

HINT:
Arrange the bearings in the correct order.

14. REMOVE STUD BOLT

15. CLEAN CYLINDER BLOCK SUB−ASSY

NOTICE:

If the cylinder is washed at high temperatures, the cylinder liner sticks out beyond the cylinder block. Always wash the cylinder block at a temperature of 45 C (113 F) or less.

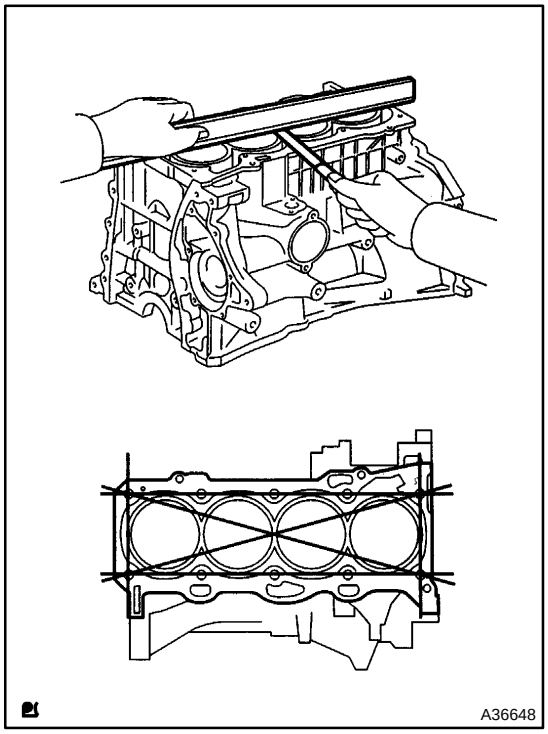

16. INSPECT CYLINDER BLOCK FOR FLATNESS

(a) Using a precision straight edge and feeler gauge, measure the surface contacting the cylinder head gasket for warpage.

Maximum warpage: 0.05 mm (0.0020 in.)

If the warpage is greater than the maximum, replace the cylinder block.

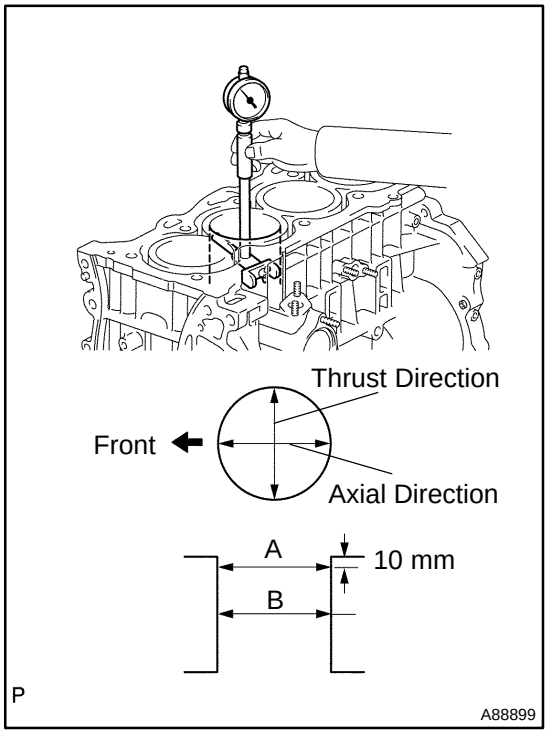

17. INSPECT CYLINDER BORE

(a) Using a cylinder gauge, measure the cylinder bore diameter at positions A and B in the thrust and axial directions.

Standard diameter:

88.500 to 88.633 mm (3.4843 to 3.4894 in.)

If the average of the measured diameters is greater than the maximum, replace the cylinder block.

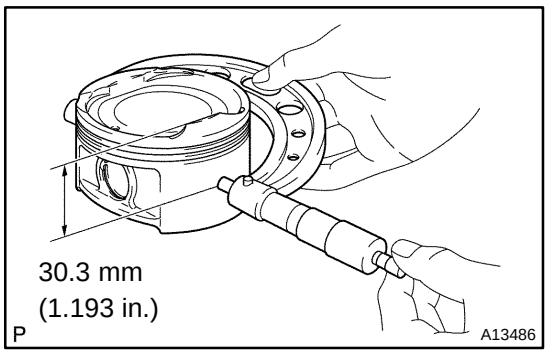

18. INSPECT PISTON DIAMETER

(a) Using a micrometer, measure the piston diameter at right angles to the piston pin center line, 30.3 mm (1.193 in.) from the piston head.

Piston diameter:
88.439 to 88.449 mm (3.4818 to 3.4822 in.)

19. INSPECT PISTON CLEARANCE

(a) Subtract the piston diameter measurement from the cylinder bore diameter measurement.

Specified oil clearance: 0.051 to 0.100 mm (0.0020 to 0.0039 in.)

If the clearance is greater than the maximum, replace all the 4 pistons. If necessary, replace the cylinder block.

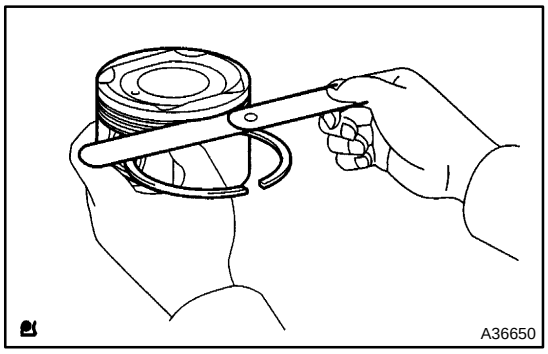

20. INSPECT RING GROOVE CLEARANCE

(a) Using a feeler gauge, measure the clearance between the piston ring and the wall of the ring groove.

Ring groove clearance:
0.030 to 0.070 mm (0.0012 to 0.0028 in.)

If the clearance is not as specified, replace the piston.

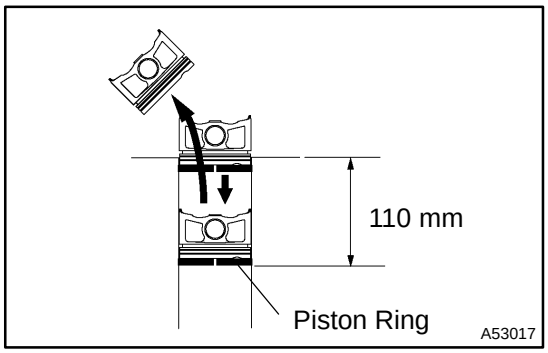

21. INSPECT PISTON RING END GAP

(a) Using a piston, push the piston ring a little beyond the bottom of the ring travel, 110 mm (4.33 in.) from the top of the cylinder block.

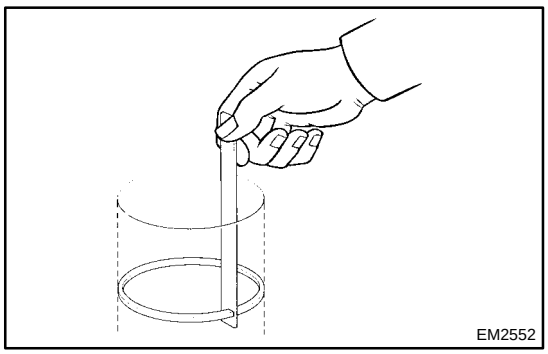

(b) Using a feeler gauge, measure the end gap.

Specified end gap:

Item	Specified Condition
No. 1	0.22 to 0.892 mm (0.0087 to 0.0350 in.)
No. 2	0.50 to 1.35 mm (0.0197 to 0.0531 in.)
Oil (side rail)	0.10 to 0.73 mm (0.0039 to 0.0287 in.)

If the end gap is greater than the maximum, replace the piston ring. If the end gap is greater than the maximum even with a new piston ring, replace the cylinder block.

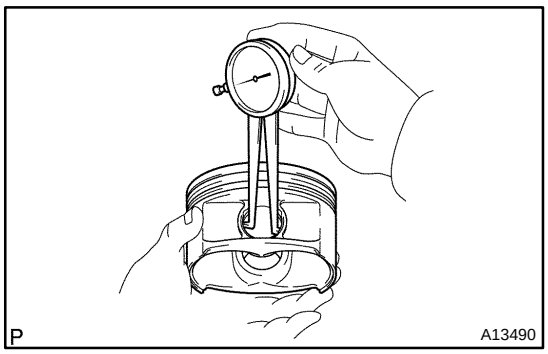

22. INSPECT PISTON PIN OIL CLEARANCE

(a) Using a caliper gauge, measure the pin hole bush diameter of the piston.

Pin hole diameter:
22.001 to 22.010 mm (0.8662 to 0.8665 in.)
Pin hole diameter (Reference):

Mark	mm (in.)
A	22.001 to 22.004 (0.8662 to 0.8663)
B	22.004 to 22.007 (0.8663 to 0.8664)
C	22.007 to 22.010 (0.8664 to 0.8665)

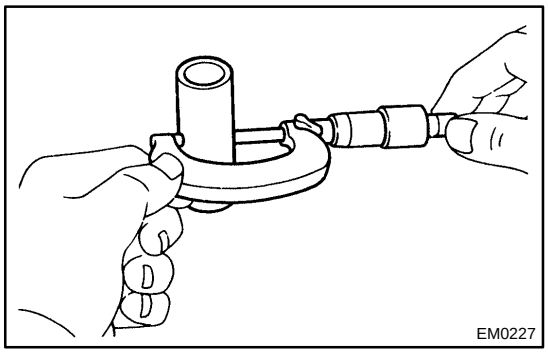

(b) Using a micrometer, measure the piston pin diameter.

Piston pin diameter:
21.997 to 22.009 mm (0.8660 to 0.8665 in.)
Piston pin diameter (Reference):

Mark	mm (in.)
A	21.997 to 22.000 (0.8660 to 0.8661)
B	22.000 to 22.003 (0.8661 to 0.8663)
C	22.003 to 22.006 (0.8663 to 0.8664)
D	22.006 to 22.009 (0.8664 to 0.8665)

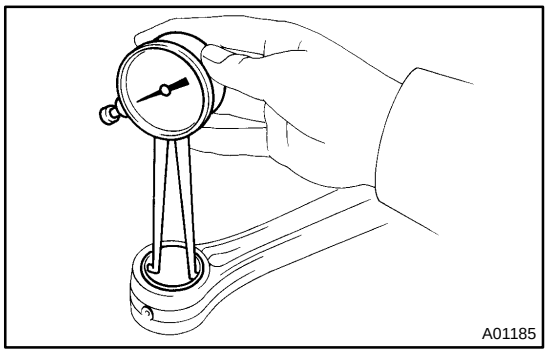

(c) Using a caliper gauge, measure the inside diameter of the connecting rod bush.

Bushing inside diameter:
22.005 to 22.014 mm (0.8663 to 0.8667 in.)
Bushing inside diameter:

Mark	mm (in.)
A	22.005 to 22.008 (0.8663 to 0.8665)
B	22.008 to 22.011 (0.8665 to 0.8666)
C	22.011 to 22.014 (0.8666 to 0.8667)

(d) Subtract the piston pin diameter measurement from the piton pin hole diameter measurement.

Specified oil clearance:
0.001 to 0.010 mm (0.00004 to 0.00039 in.)

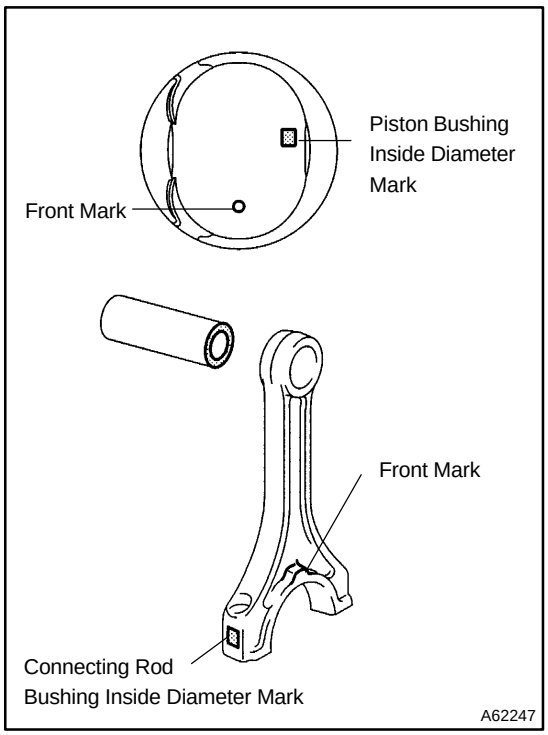

If the oil clearance is greater than the maximum, replace the connecting rod. If necessary, replace the piston and piston pin as a set.

(e) Subtract the piston pin diameter measurement from the bushing inside diameter measurement.

Specified oil clearance:

0.005 to 0.100 mm (0.0002 to 0.0020 in.)

If the oil clearance is greater than the maximum, replace the connecting rod. If necessary, replace the connecting rod and piston pin as a set.

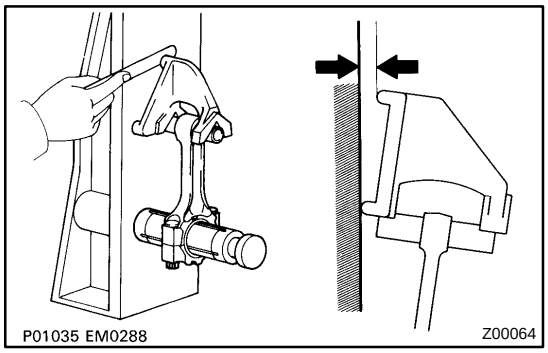

23. INSPECT CONNECTING ROD SUB−ASSY

(a) Using a rod aligner and feeler gauge, check the connecting rod alignment.

(1) Check for out−of−alignment.

Maximum out−of−alignment:

0.05 mm (0.0020 in.) per 100 mm (3.94 in.)

If the out−of−alignment is greater than the maximum, replace the connecting rod assembly.

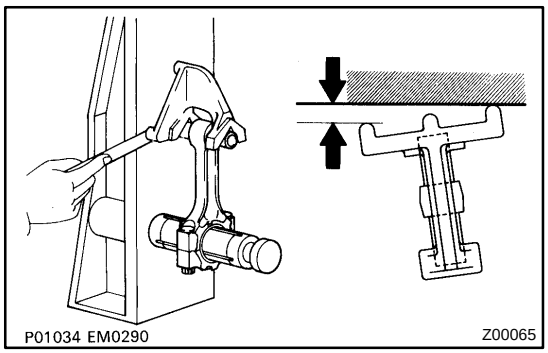

(2) Check for twist.

Maximum twist:

0.15 mm (0.0059 in.) per 100 mm (3.94 in.)

If the twist is greater than the maximum, replace the connecting rod assembly.

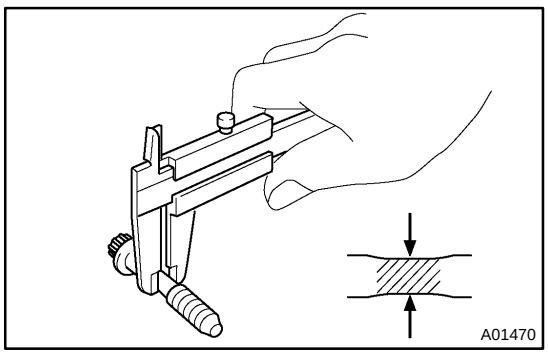

24. INSPECT CONNECTING ROD BOLT

(a) Using a vernier caliper, measure the tension portion diameter of the bolt.

Specified diameter: 7.0 to 7.3 mm (0.276 to 0.287 in.)

If the diameter is less than the minimum, replace the bolt.

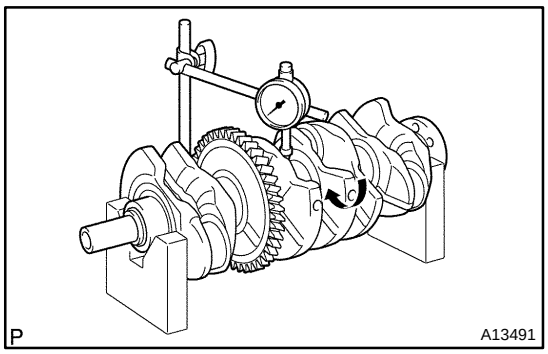

25. INSPECT CRANKSHAFT

(a) Using a dial indicator and V−blocks, measure the circle runout, as shown in the illustration.

Maximum circle runout: 0.03 mm (0.0012 in.)

If the circle runout is greater than the maximum, replace the crankshaft.

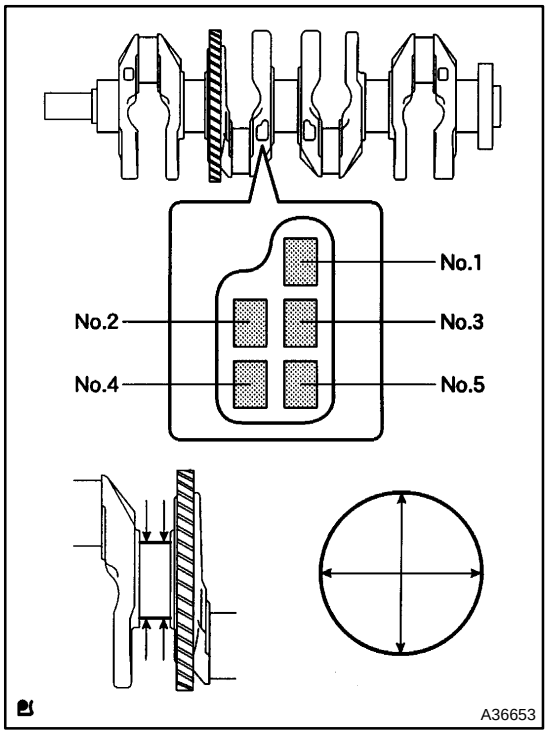

(b) Using a micrometer, measure the diameter of each main journal.

Diameter: 54.988 to 55.000 (2.1648 to 2.06535 in.)

If the diameter is not as specified, check the oil clearance (see step 9). If necessary, replace the crankshaft.

(c) Check each main journal for taper and out−of−round as shown in the illustration.

Maximum taper and out−of−round:
0.003 mm (0.0001 in.)

If the taper and out−of−round is greater than the maximum, replace the crankshaft.

Diameter (Reference):

Mark	Specified Condition
0	54.998 to 55.000 mm (2.1653 to 2.1654 in.)
1	54.996 to 54.998 mm (2.1652 to 2.1653 in.)
2	54.994 to 54.996 mm (2.1651 to 2.1652 in.)
3	54.992 to 54.994 mm (2.1650 to 2.1651 in.)
4	54.990 to 54.992 mm (2.1650 to 2.1650 in.)
5	54.988 to 54.990 mm (2.1649 to 2.1650 in.)

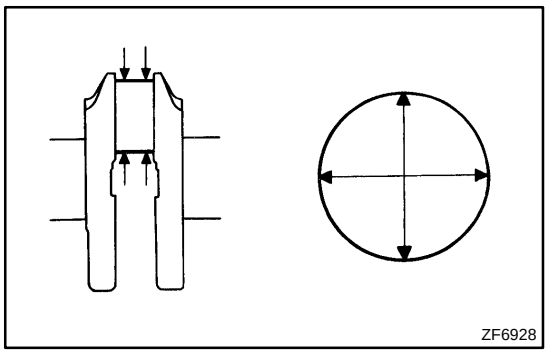

(d) Using a micrometer, measure the diameter of each crank pin.

Diameter: 47.990 to 48.000 mm (1.8894 to 1.8898 in.)

If the diameter is not as specified, check the oil clearance (see step 2). If necessary, replace the crankshaft.

(e) Check each crank pin for taper and out−of−round as shown in the illustration.

Maximum taper and out−of−round:
0.003 mm (0.0001 in.)

If the taper and out−of−round is greater than the maximum, replace the crankshaft.

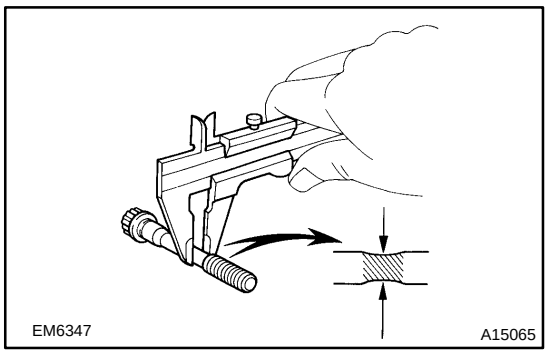

26. INSPECT CRANKSHAFT BEARING CAP SET BOLT

(a) Using a vernier caliper, measure the tension portion diameter of the bolt.

Specified diameter: 7.2 to 7.6 mm (0.283 to 0.299 in.)

If the diameter is less than the minimum, replace the bolt.

27. INSTALL RING PIN

(a) Using a plastic−faced hammer, tap into the ring pin.

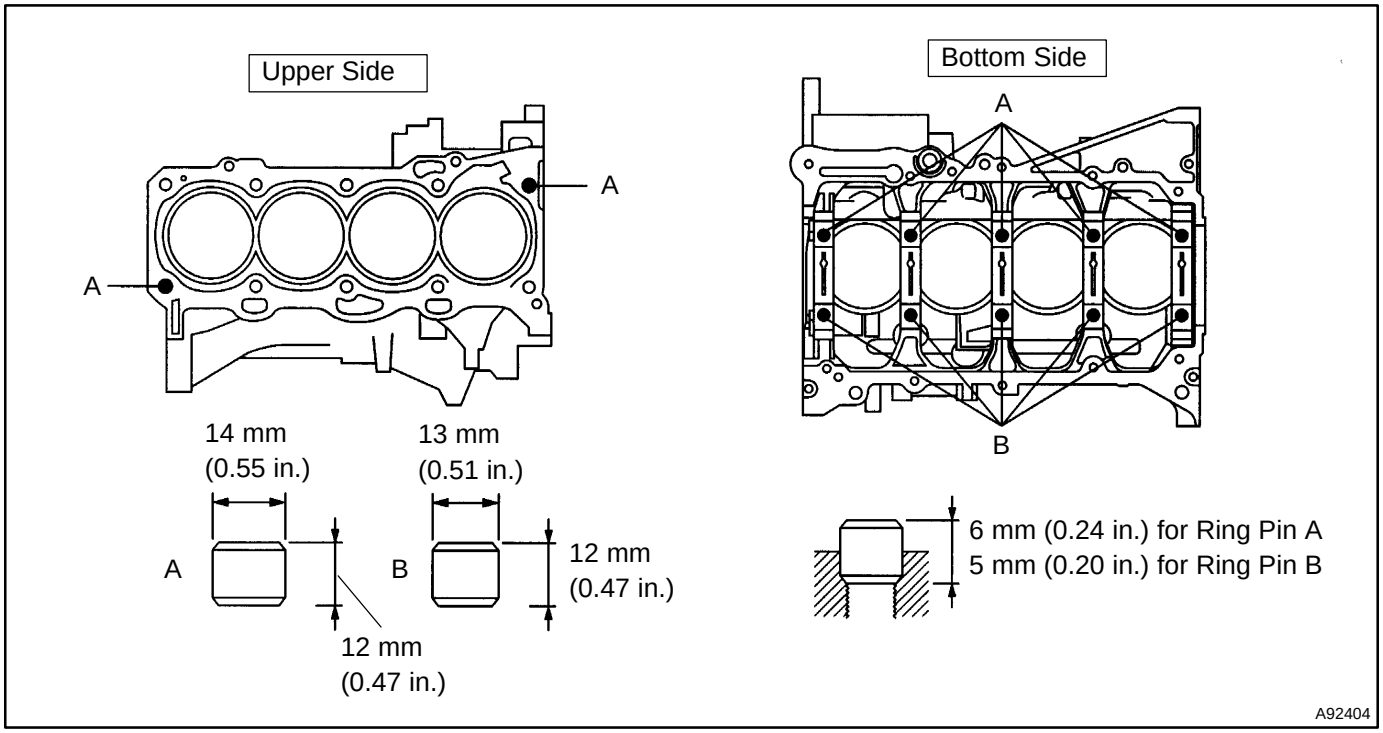

28. INSTALL TIGHT PLUG

(a) Apply adhesive around the tight plugs.
Adhesive: Part No. 08833−00070, THREE BOND 1324 or equivalent.

(b) Using SST, install new tight plugs as shown in the illustration.
SST 09950−60010 (09951−00200), 09950−70010 (09951−07100)

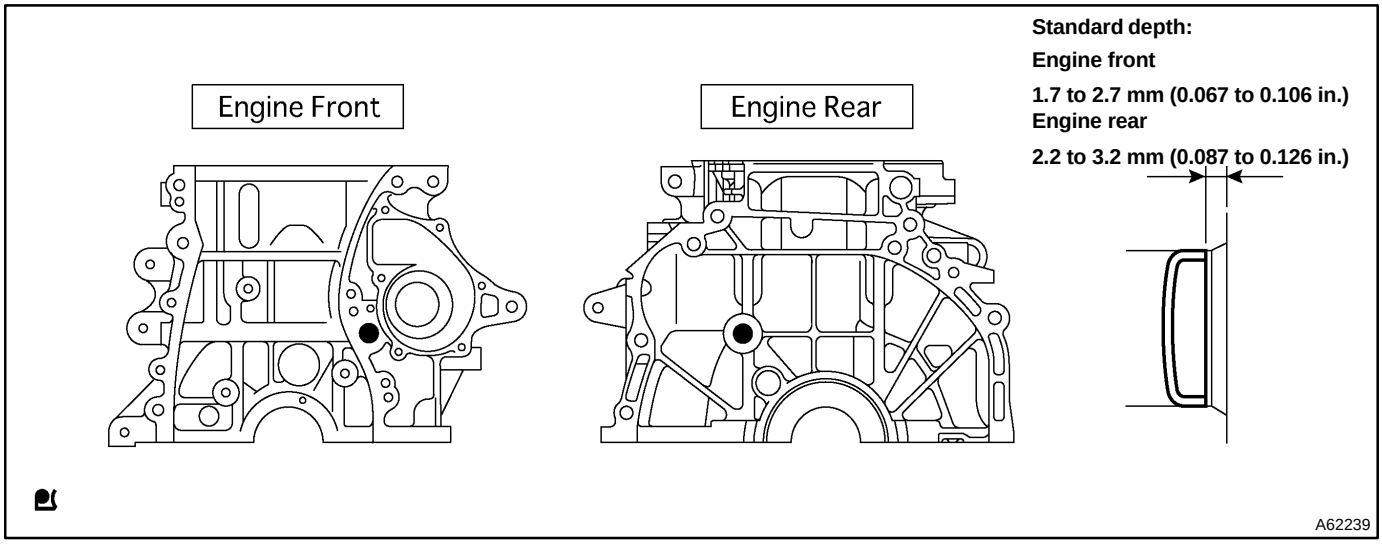

29. INSTALL STUD BOLT

(a) Install the stud bolts as shown in the illustration.
Torque:
5.0 N·m (51 kgf·cm, 44 in.·lbf) for stud bolt A
10 N·m (97 kgf·cm, 7 ft·lbf) for stud bolt B
5.0 N·m (51 kgf·cm, 44 in.·lbf) for stud bolt C

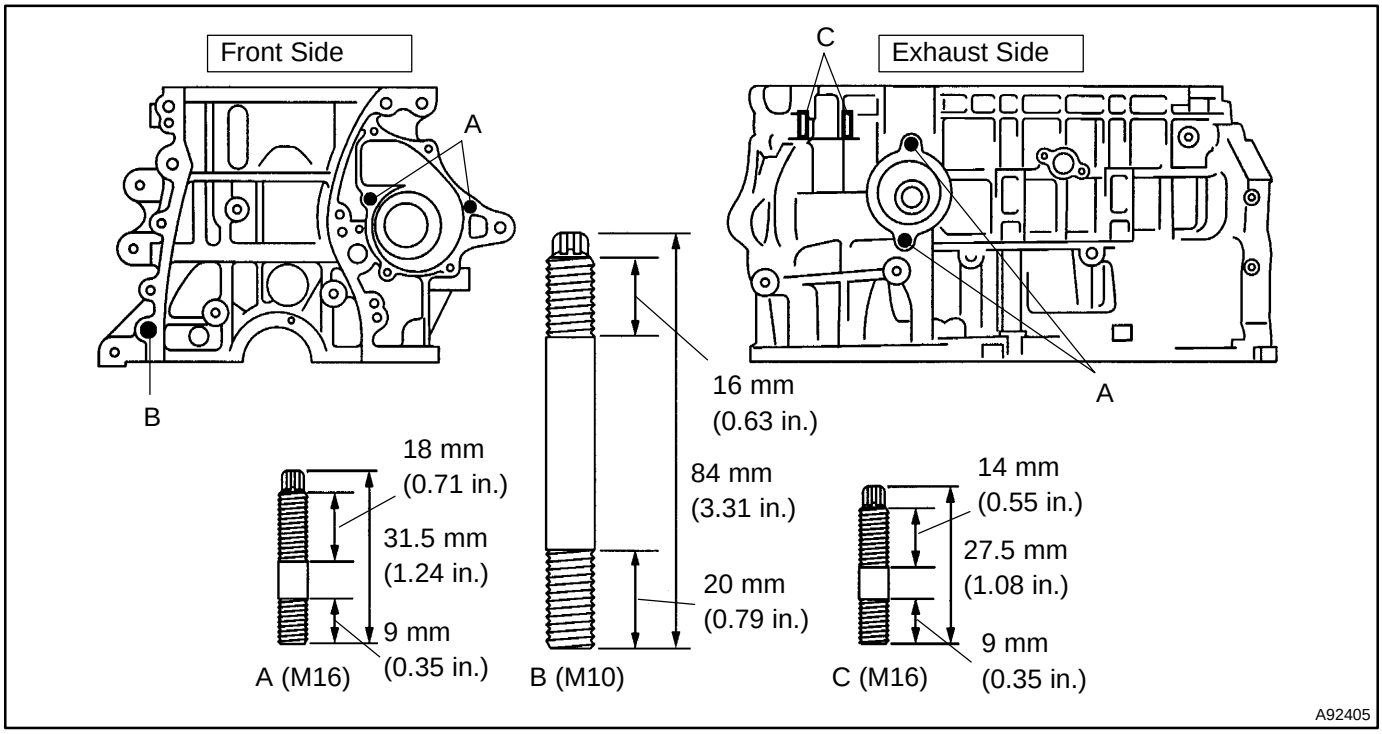

30. INSTALL STRAIGHT PIN

(a) Using a plastic−faced hammer, tap into the straight pin.

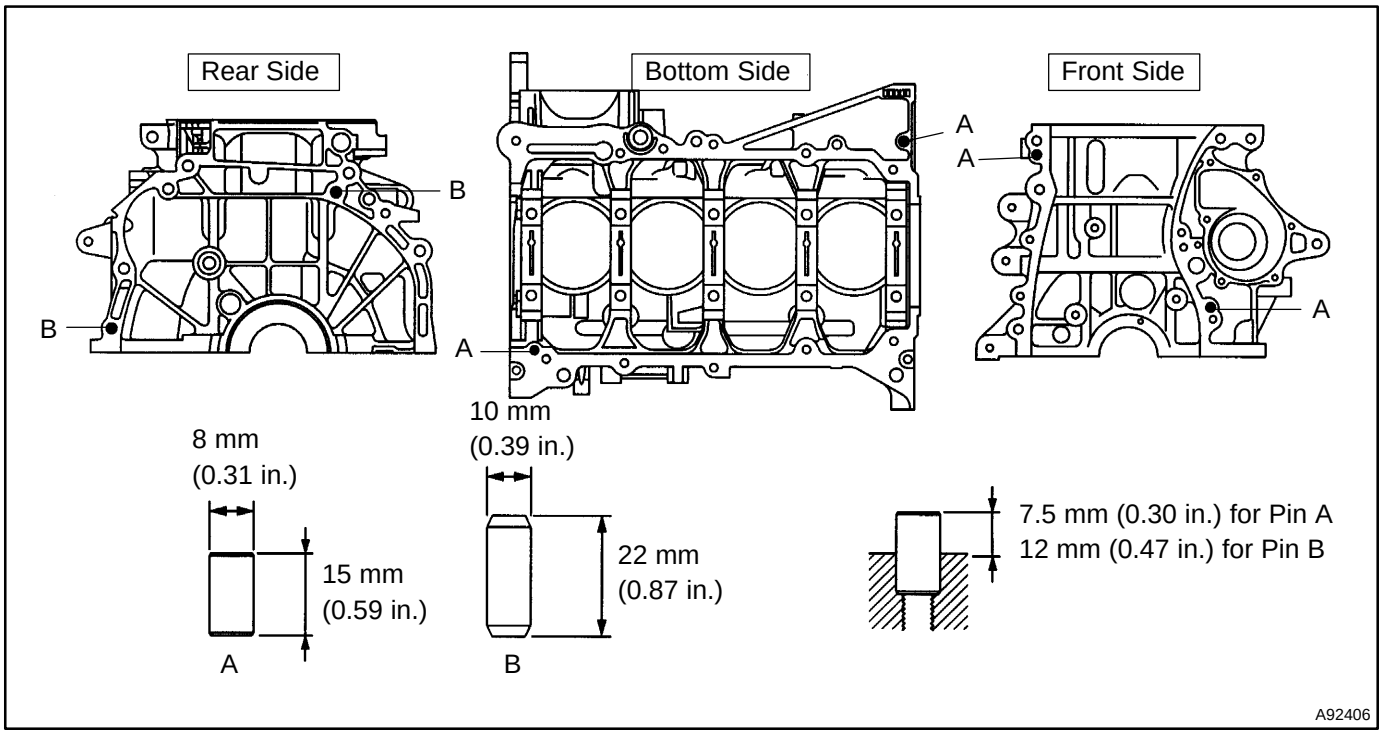

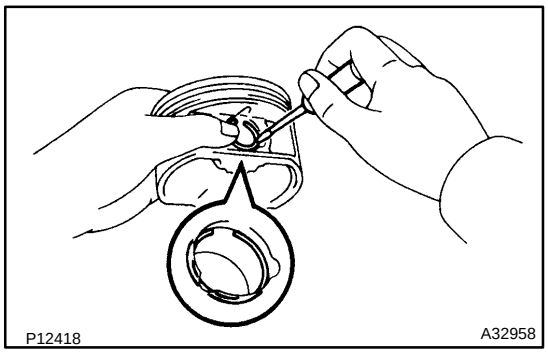

31. INSTALL PISTON

(a) Using a small screwdriver, install a new snap ring at one end of the piston pin hole.

(b) Gradually heat the piston to approxinately 80 to 90 C (176 to 194 F).

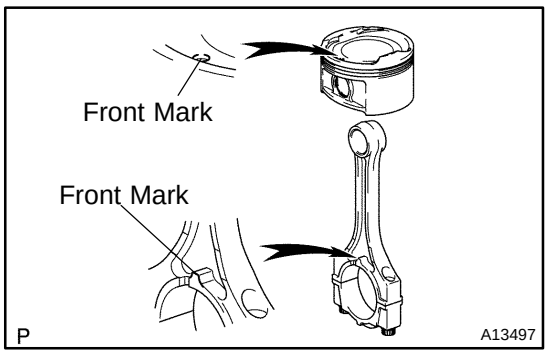

(c) Align the front marks of the piston and connecting rod, and push in the piston with your thumb.

(d) Using a small screwdriver, install a new snap ring on the other end of the piston pin hole.

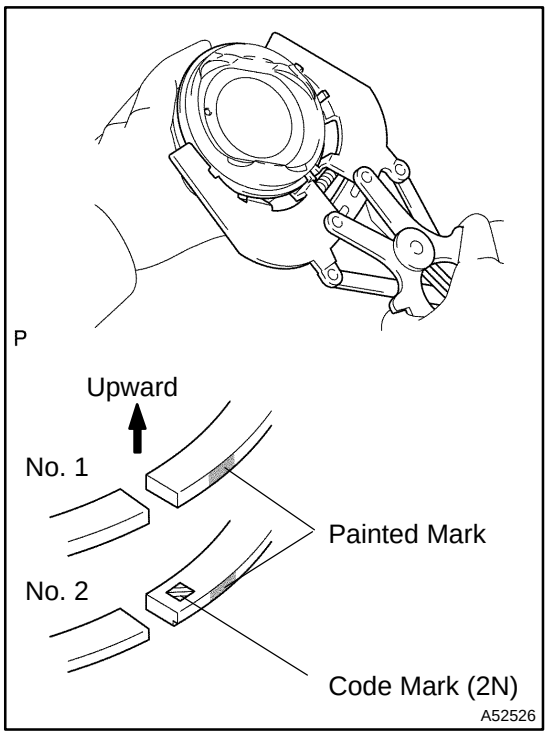

32. INSTALL PISTON RING SET

(a) Install the oil ring expander and 2 side rails by hand.

(b) Using a piston ring expander, install the 2 compression rings with the painted mark as shown in the illustration.

NOTICE:

Install the compression ring No. 2 with the code mark (2N) facing upward.

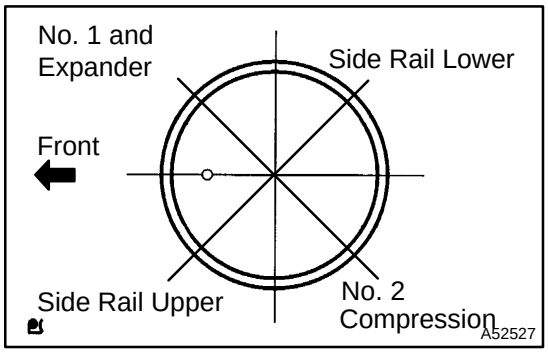

(c) Position the piston rings so that the ring ends are as shown in the illustration.

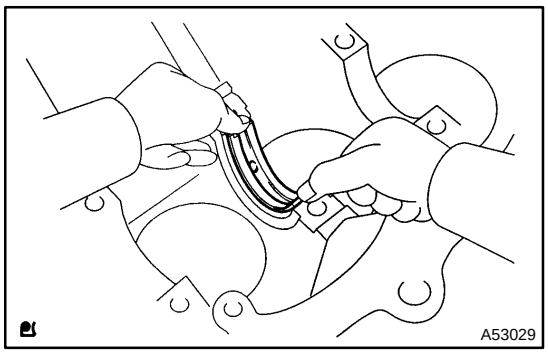

33. INSTALL CRANKSHAFT BEARING

(a) Install the upper bearing with an oil groove on the cylinder block.

NOTICE:

Clean the backside of the bearing and the bearing surface of the cylinder block and let not stick the oils and fats.

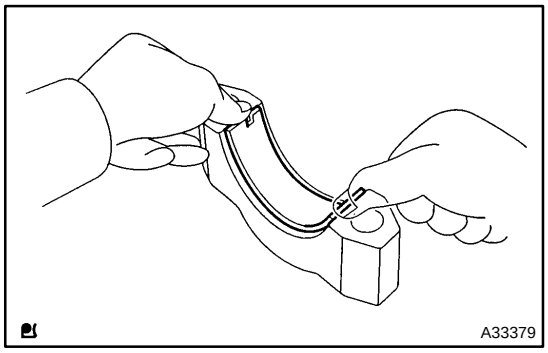

34. INSTALL CRANKSHAFT BEARING NO.2

(a) Install the lower bearing on bearing cap.

NOTICE:

Clean the backside of the bearing and the bearing surface of the connecting rod. The surface should be free of dust and oils.

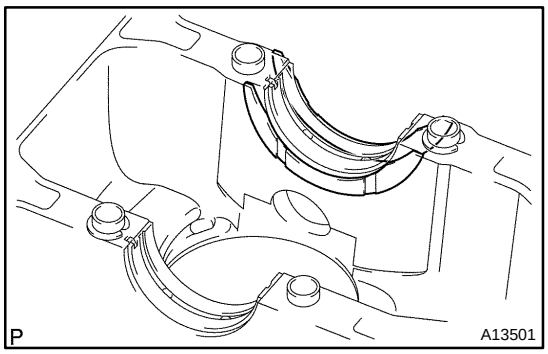

35. INSTALL CRANKSHAFT THRUST WASHER UPPER

(a) Install the 2 thrust washers under the No. 3 journal position of the cylinder block with the oil grooves facing outward.

36. INSTALL CRANKSHAFT

(a) Apply engine oil to upper bearing and install the crankshaft on the cylinder block.

(b) Apply engine oil to the lower bearing.

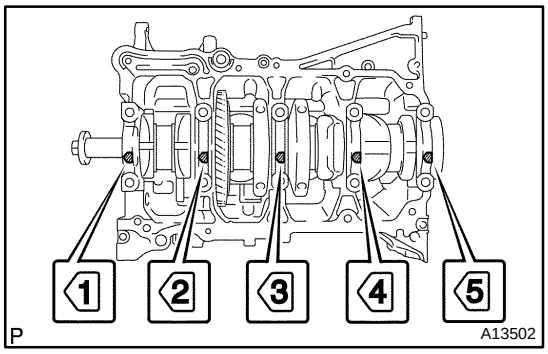

(c) Examine the front marks and install the bearing caps on the cylinder block.

(d) Apply a light coat of engine oil on the threads and under the bearing cap bolts.

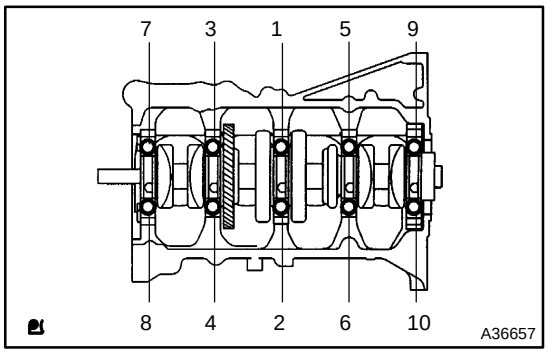

(e) Uniformly install and tighten the 16 main bearing cap bolts in the sequence shown in the illustration.
Torque: 20 N·m (204 kgf·cm, 15 ft·lbf)

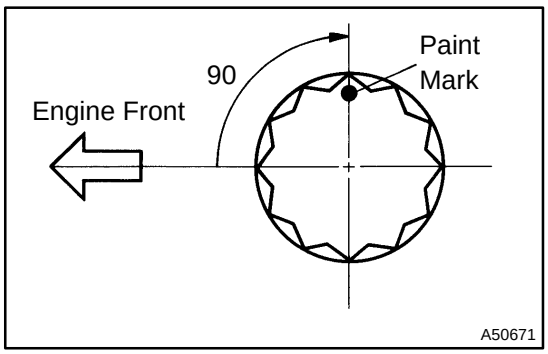

(f) Mark the front of the bearing cap bolts with paint.

(g) Retighten the bearing cap bolts by 90 in the numerical order shown in the illustration.

(h) Check that the painted mark is now at a 90 angle to the front.

(i) Check that the crankshaft turns smoothly.

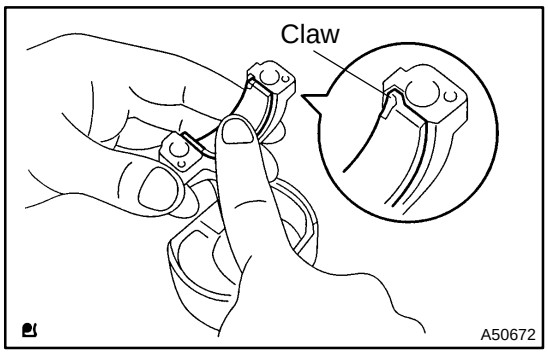

37. INSTALL CONNECTING ROD BEARING

(a) Align the bearing claw with the groove of the connecting rod or connecting cap.

NOTICE:

Clean the backside of the bearing and the bearing surface of the connecting rod. The surface should be free of dust and oil.

38. INSTALL PISTON

NOTICE:

The connecting rod cap bolts are tightened in 2 progressive steps.

(a) Apply engine oil to the cylinder walls, the pistons, and the surfaces of connecting rod bearings.

(b) Check the position of the piston ring ends.

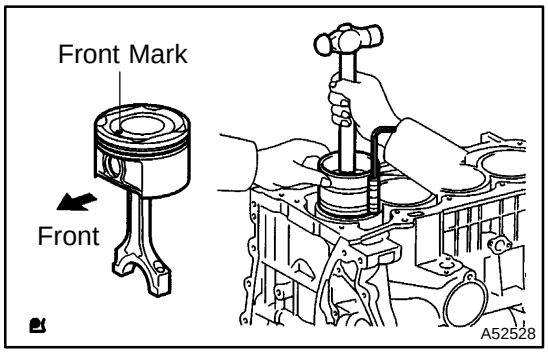

(c) Using a piston ring compressor, push the correctly numbered piston and connecting rod assemblies into each cylinder with the front mark of the piston facing forward.

NOTICE:

Match the numbered connecting rod cap with the connecting rod.

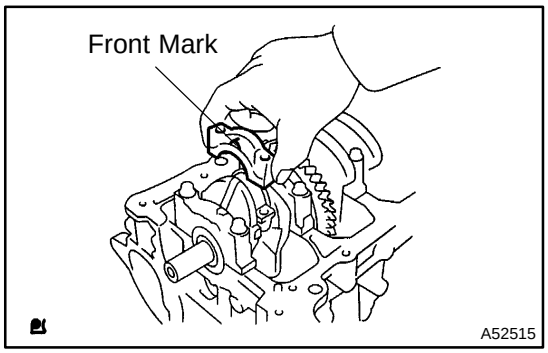

(d) Check that the protrusion of the connecting rod cap is facing in the correct direction.

(e) Apply a light coat of engine oil on the threads and under the heads of the connecting rod cap bolts.

(f) Using a 12 mm socket wrench, uniformly tighten the 2 bolts.

Torque: 25 N·m (250 kgf·cm, 18 ft·lbf)

(g) Mark the front of the connecting cap bolts with paint.

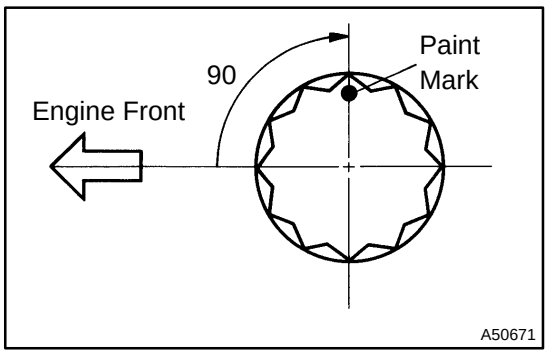

(h) Retighten the cap bolts by 90 as shown in the illustration.

(i) Check that the crankshaft turns smoothly.

ENGINE (1MZ−FE/3MZ−FE)

1404Q−09

INSPECTION

1. **INSPECT ENGINE COOLANT (See page 16−21)**
2. **INSPECT ENGINE OIL (See page 17−23)**
3. **INSPECT BATTERY (See page 19−39)**
4. **INSPECT AIR CLEANER FILTER ELEMENT SUB−ASSY (See page 99−5)**
5. **INSPECT SPARK PLUG (See page 18−9)**

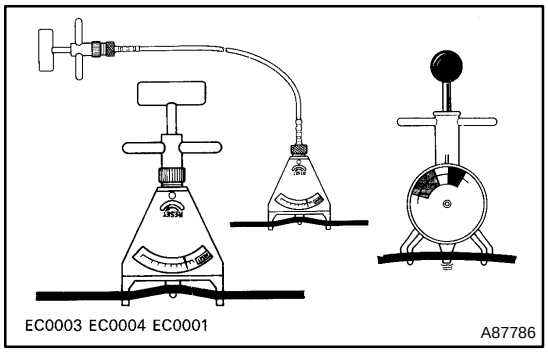

6. INSPECT V−RIBBED BELT

(a) Using a belt tension gauge, check the belt tension.

Belt tension gauge:
DENSO BTG−20 (95506−00020)
Borroughs No. BT−33−73F

Drive belt tension:

Item	Specified Condition
Cooler compressor to crankshaft pulley New belt	139 to 192 lbf
Cooler compressor to crankshaft pulley Used belt	66 to 110 lbf
Vane pump New belt	154 to 176 lbf
Vane pump Used belt	77 to 110 lbf

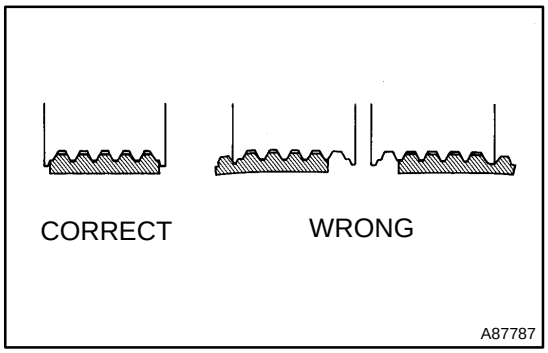

HINT:

- After installing the drive belt, check that it fits properly in the ribbed grooves. Check with your hand to confirm that the belt has not slipped out of the groove on the bottom of the crankshaft pulley.
- ”New belt” is a belt which has been used less than 5 minutes on a running engine.
- ”Used belt” is a belt which has been used on a running engine for 5 minutes or more.
- After installing a new belt, run the engine for approximately 5 minutes and then recheck the tension.

7. INSPECT IGNITION TIMING

(a) Warm up the engine.

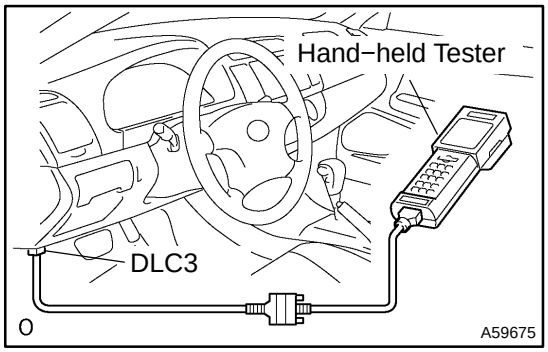

(b) When using the hand−held tester:
Check the ignition timing.
(1) Connect the hand−held tester to the DLC3.
(2) Enter DATA LIST MODE on the hand−held tester.

Ignition timing : 8 to 12 BTDC @ idle

HINT:
Please refer to the hand−held tester operator’s manual for help on selecting the DATA LIST.

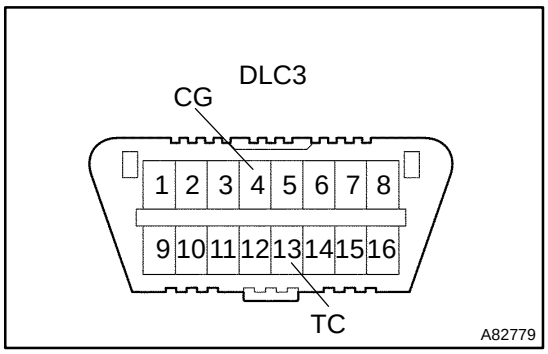

(c) When not using the hand−held tester:
Check the ignition timing.
(1) Using SST, connect terminals 13 (TC) and 4 (CG) of the DLC3.

NOTICE:

- **Confirm the terminal numbers before connecting them. Connection with a wrong terminal can damage the engine.**
- **Turn off all electrical systems before connecting the terminals.**
- **Perform this inspection after the cooling fan motor is turned off.**

(2) Remove the V−bank cover.

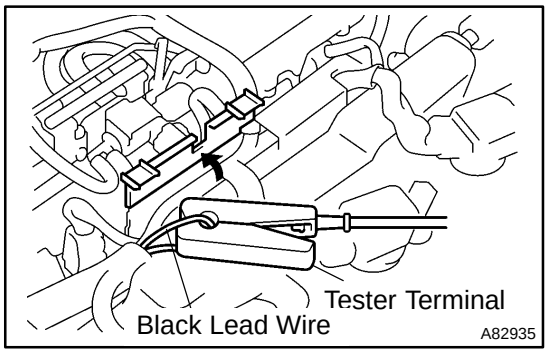

(3) Pull out the black lead wire harness as shown in the illustration.
(4) Connect the tester terminal of the timing light to the engine.

NOTICE:

Use a timing light which detects the first signal.

(5) Check the ignition timing at idle.
Ignition timing : 8 to 12 BTDC @ idle

NOTICE:

When checking the ignition timing, the transmission should be in the neutral position.

HINT:

Run the engine at 1,000 to 1,300 rpm for 5 seconds, and then check that the engine rpm returns to idle speed.

(6) Disconnect terminals 13 (TC) and 4 (CG) of the DLC3.
(7) Check the ignition timing at idle.
Ignition timing : 7 to 24 BTDC @ idle
(8) Confirm that the ignition timing moves to the advanced angle side when the engine rpm is increased.
(9) Remove the timing light.

8. INSPECT ENGINE IDLE SPEED

(a) Warm up the engine.

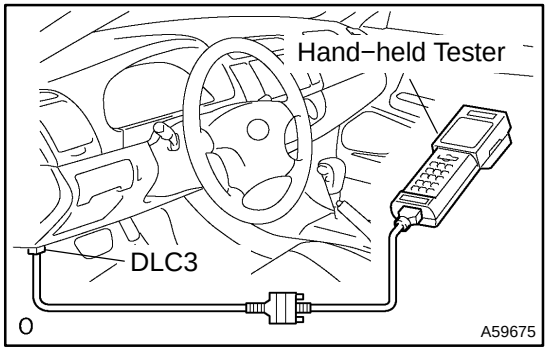

(b) When using the hand−held tester:
Check the idle speed.
(1) Connect the hand−held tester to the DLC3.
(2) Enter DATA LIST MODE on the hand−held tester.
Idle speed:

Item	Specified Condition
1MZ−FE	550 to 650 rpm
3MZ−FE	630 to 730 rpm

NOTICE:

- **When checking the idle speed, the transmission should be in the neutral position.**
- **Check the idle speed with the cooling fan off.**
- **Switch off all accessories and air conditioning before connecting the hand−held tester.**

HINT:
Please refer to the hand−held tester operator's manual for further details.

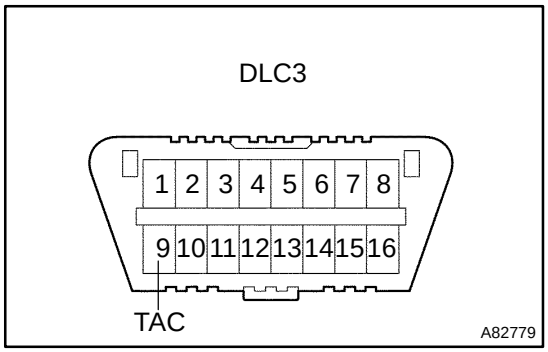

(c) When not using the hand−held tester:
Check the idle speed.
(1) Using SST, connect tachometer test probe to terminal 9 (TAC) of the DLC3.
SST 09843−18030
(2) Check the idle speed.
Idle speed:

Item	Specified Condition
1MZ−FE	550 to 650 rpm
3MZ−FE	630 to 730 rpm

9. INSPECT COMPRESSION

(a) Warm up and stop the engine.
(b) Disconnect the injector connectors.
(c) Remove the intake air surge tank (see page 14−142).
(d) Remove the 6 ignition coils.
(e) Remove the 6 spark plugs.

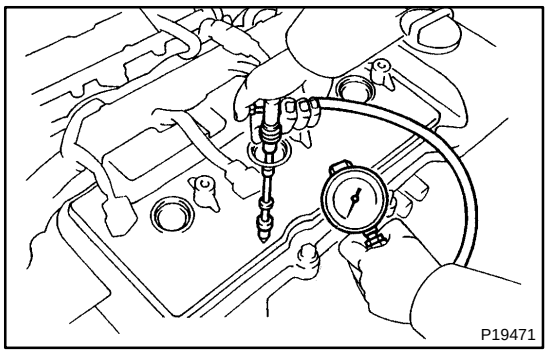

(f) Check the cylinder compression pressure.
SST 09992−00500
(1) Insert a compression gauge into the spark plug hole.
(2) Fully open the throttle.
(3) While cranking the engine, measure the compression pressure.
Compression pressure:1.5 MPa (15.3 kgf/cm^2, 218 psi)
Minimum pressure: 1.0 MPa (10.2 kgf/cm^2, 145 psi)
Difference between each cylinder:
100 kPa (1.0 kgf/cm^2, 15 psi)

NOTICE:

- **Always use a fully charged battery to obtain engine speed of 250 rpm or more.**
- **Check other cylinder's compression pressure in the same way.**
- **This measurement must be done as quickly as possible.**

(4) If the cylinder compression is low, pour a small amount of engine oil into the cylinder through the spark plug hole and inspect again.

HINT:

- If adding oil increases the compression, the piston rings and/or cylinder bore may be worn or damaged.
- If pressure stays low, a valve may be stuck or seated improperly, or there may be leakage in the gasket.

10. INSPECT CO/HC

(a) Start the engine.

(b) Rev the engine at 2,500 rpm for approximately 180 seconds.

(c) Insert CO/HC meter testing probe at least 40 cm (1.3 ft) into the tailpipe during idling.

(d) Check CO/HC concentration at idle and/or 2,500 rpm.

HINT:

Check regulations and restrictions in your area when performing 2 mode CO/HC concentration testing (engine check at both idle speed and at 2,500 rpm).

If the CO/HC concentration does not comply with regulations, troubleshoot in the order given below.

(1) Check A/F sensor operation (see page 05−791).

(2) See the table below for possible causes, and then inspect and repair.

CO	HC	Problems	Causes
Normal	High	Rough idle	1. Faulty ignitions: ●Incorrect timing ●Fouled, shorted or improperly gapped plugs 2. Incorrect valve clearance 3. Leaks in intake and exhaust valves 4. Leaks in cylinders
Low	High	Rough idle (fluctuating HC reading)	1. Vacuum leaks: ●PCV hoses ●Intake manifold ●Throttle body ●Brake booster line 2. Lean mixture causing misfire
High	High	Rough idle (black smoke from exhaust)	1. Restricted air filter 2. Plugged PCV valve 3. Faulty SFI system: ●Faulty fuel pressure regulator ●Defective ECT sensor ●Defective MAF meter ●Faulty ECM ●Faulty injectors ●Faulty throttle position sensor

DRIVE BELT (1MZ−FE/3MZ−FE)

1405G−08

REPLACEMENT

1. REMOVE FRONT WHEEL RH

2. REMOVE FRONT FENDER APRON SEAL RH

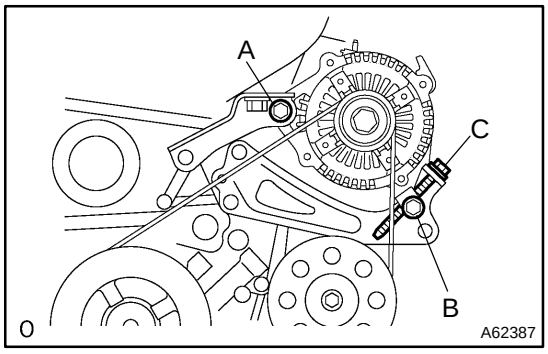

3. REMOVE V (COOLER COMPRESSOR TO CRANKSHAFT PULLEY) BELT NO.1

(a) Loosen bolts A and B.

(b) Loosen adjusting bolt C and remove the belt.

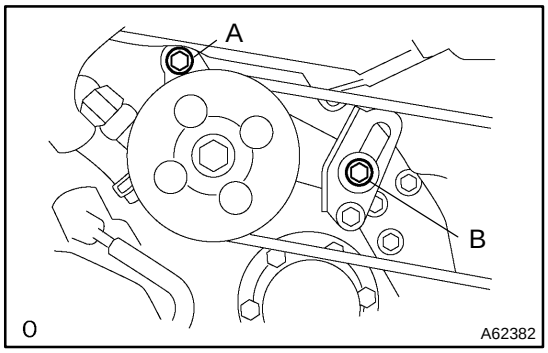

4. REMOVE VANE PUMP V BELT

(a) Loosen bolts A and B, and remove the belt.

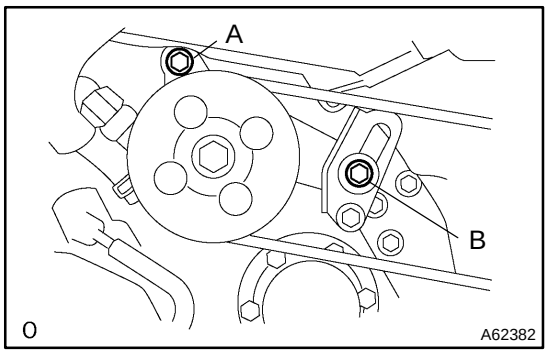

5. INSTALL VANE PUMP V BELT

(a) Install the belt on each pulley.

(b) Using a bar, adjust the belt tension and tighten bolt B.
Torque: 43 N·m (439 kgf·cm, 32 ft·lbf)

(c) Tighten bolt A.
Torque: 43 N·m (439 kgf·cm, 32 ft·lbf)

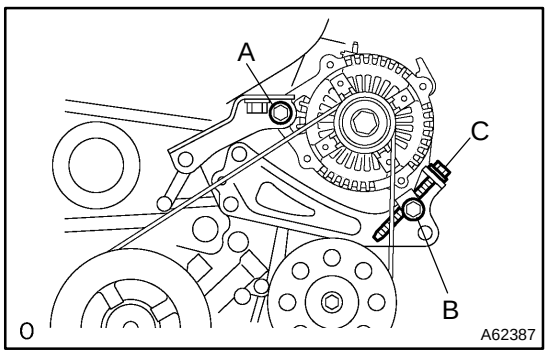

6. INSTALL V (COOLER COMPRESSOR TO CRANKSHAFT PULLEY) BELT NO.1

(a) Install the belt on each pulley.

(b) Tighten adjusting bolt C, and adjust the belt tension.

(c) First tighten bolt A, then B.
Torque:
58 N·m (591 kgf·cm, 43 ft·lbf) for bolt A
18 N·m (184 kgf·cm, 13 ft·lbf) for bolt B

7. INSPECT DRIVE BELT TENSION (See page 14−140)

8. INSTALL FRONT WHEEL RH

VALVE CLEARANCE (1MZ−FE/3MZ−FE)

141IH−03

ADJUSTMENT

1. **DRAIN ENGINE COOLANT (See page 16−27)**
2. **REMOVE FRONT FENDER APRON SEAL RH**

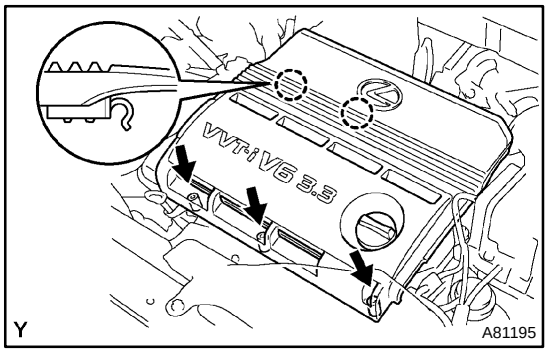

3. **REMOVE V−BANK COVER SUB−ASSY**

(a) Using a socket hexagon wrench 5, remove the 3 nuts.
(b) Remove the V−bank cover.

4. **REMOVE RADIATOR HOSE INLET**
5. **REMOVE FRONT SUSPENSION UPPER BRACE CENTER (W/ FRONT SUSPENSION BRACE UPPER CENTER)**
6. **REMOVE AIR CLEANER ASSEMBLY WITH HOSE**

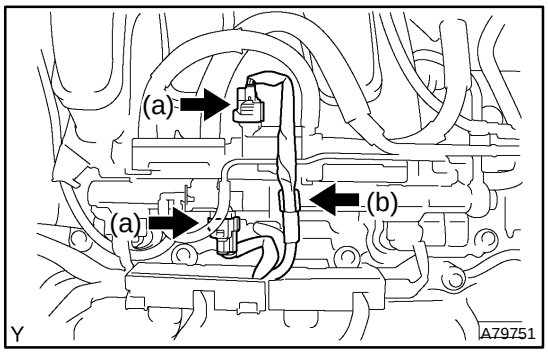

7. **REMOVE EMISSION CONTROL VALVE SET**

(a) Disconnect the 2 VSV connectors.
(b) Remove the wire harness clamp.

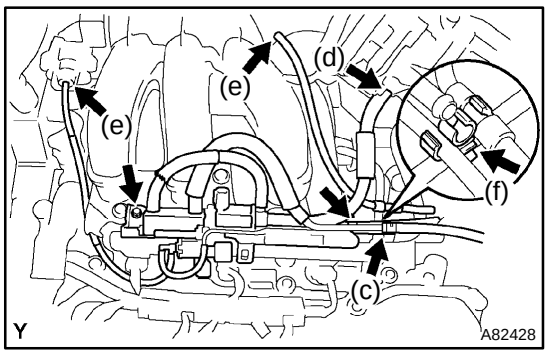

(c) Disconnect the fuel vapor feed hose No. 1.
(d) Disconnect the fuel vapor feed hose No. 2.
(e) Disconnect the 2 vacuum hoses.
(f) Remove the clamp.
(g) Remove the 2 nuts and the emission control valve set.

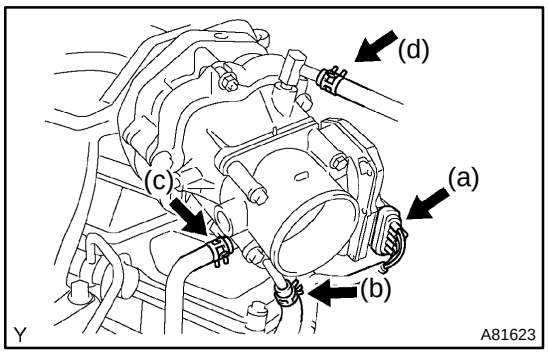

8. REMOVE INTAKE AIR SURGE TANK

(a) Disconnect the throttle motor connector.
(b) Disconnect the water by−pass hose No. 3.
(c) Disconnect the water by−pass hose No. 2.
(d) Disconnect the union to check valve hose.

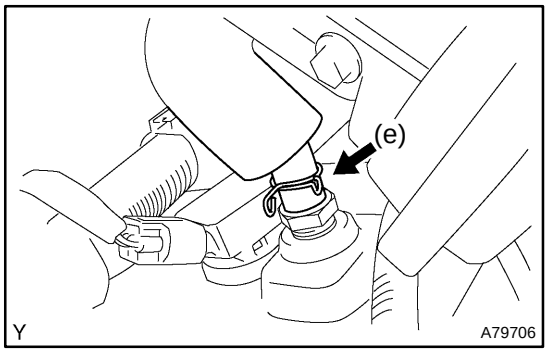

(e) Disconnect the ventilation hose.

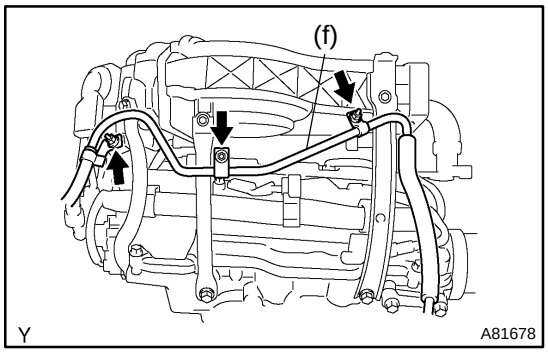

(f) Remove the 3 nuts and disconnect the pressure feed tube.

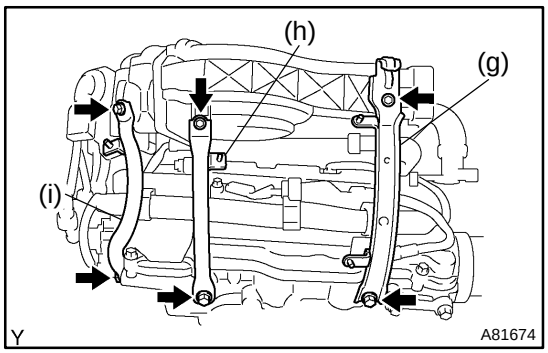

(g) Remove the 2 bolts and engine hanger No. 1.
(h) Remove the 2 bolts and surge tank stay No. 1.
(i) Remove the 2 bolts and surge tank stay No. 2.

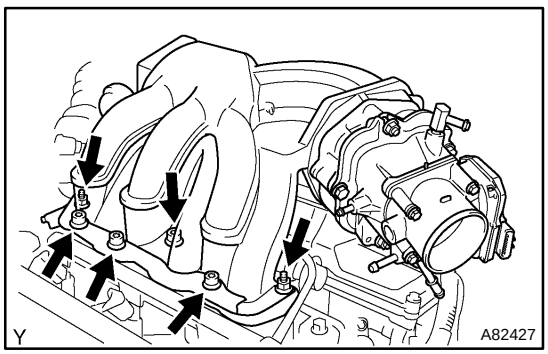

(j) Using a socket hexagon wrench 8, remove the 4 bolts.
(k) Remove the 2 nuts, emission control valve bracket and intake air surge tank.
(l) Remove the gasket from the intake air surge tank.

9. REMOVE IGNITION COIL ASSY

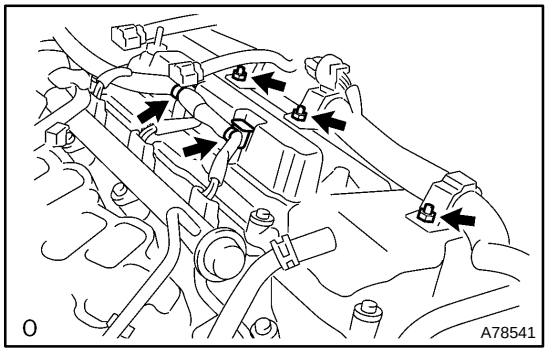

10. REMOVE CYLINDER HEAD COVER SUB−ASSY

(a) Remove the 2 engine wire harness clamps.
(b) Remove the 3 nuts and disconnect the engine wire harness.
(c) Remove the 9 bolts and cylinder head cover.

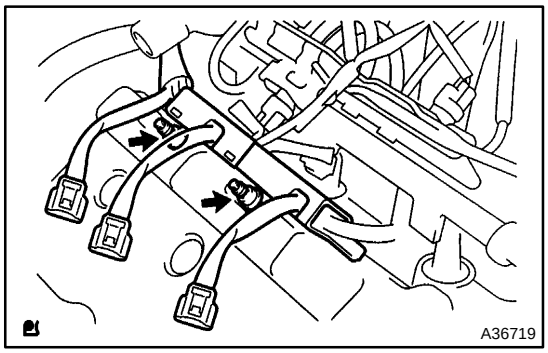

11. REMOVE CYLINDER HEAD COVER SUB−ASSY LH

(a) Using an E6 torx socket wrench, remove the 2 bolts and disconnect the engine wire harness protector.
(b) Remove the 9 bolts and cylinder head cover.

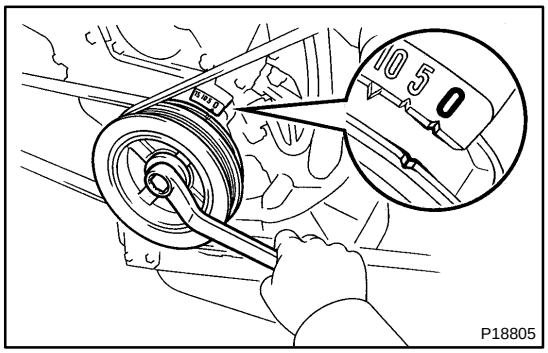

12. INSPECT VALVE CLEARANCE

(a) Turn the crankshaft pulley, and align the timing notch with timing mark 0 of the No. 1 timing belt cover.
(b) Check that the valve lifters on the No. 1 timing belt cover (IN and EX) are both loose.

If not, turn the crankshaft 1 revolution (360) and align the mark as above.

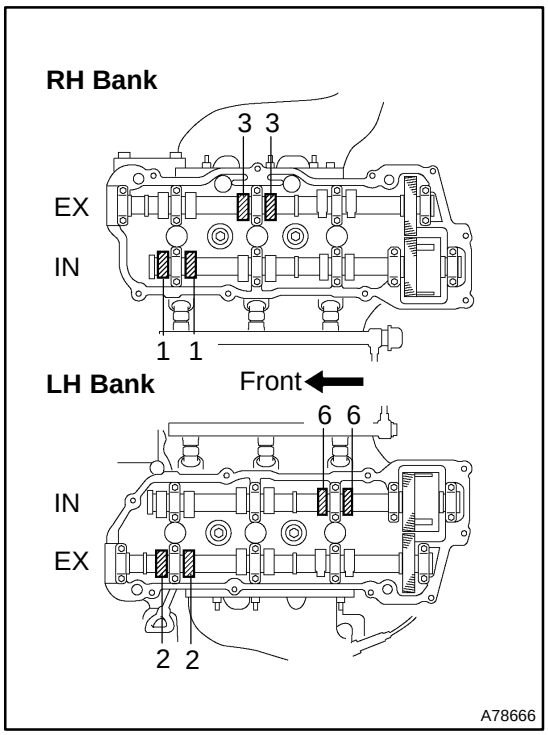

(c) Check the valves indicated in the illustration on the left.

(1) Using a feeler gauge, measure the clearance between the valve lifter and camshaft.

Valve clearance (Cold):

Item	Specified Condition
Intake	0.15 to 0.25 mm (0.006 to 0.010 in.)
Exhaust	0.25 to 0.35 mm (0.010 to 0.014 in.)

(2) Record valve clearance measurements that are out of the specified range. These measurements will be used later to determine the size of the adjustment shim to be installed.

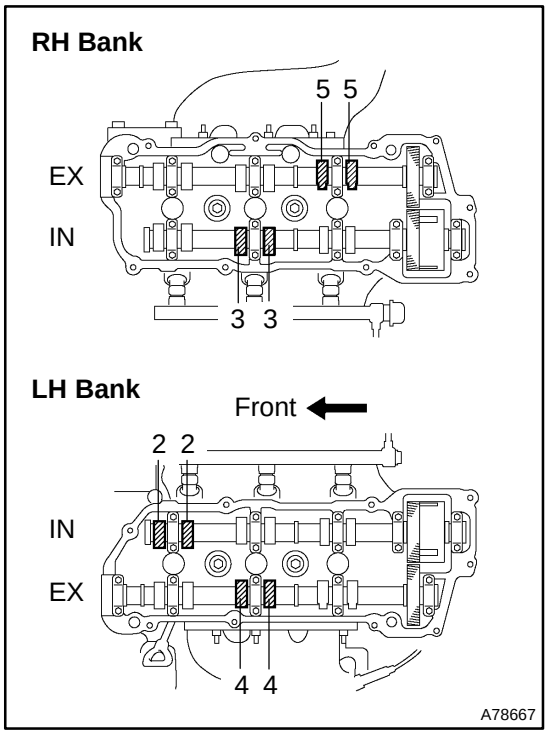

(d) Turn the crankshaft 2/3 of a revolution (240), and check the valves indicated in the illustration on the left.

(1) Using a feeler gauge, measure the clearance between the valve lifter and camshaft.

Valve clearance (Cold):

Item	Specified Condition
Intake	0.15 to 0.25 mm (0.006 to 0.010 in.)
Exhaust	0.25 to 0.35 mm (0.010 to 0.014 in.)

(2) Record valve clearance measurements that are out of the specified range. These measurements will be used later to determine the size of the adjustment shim to be installed.

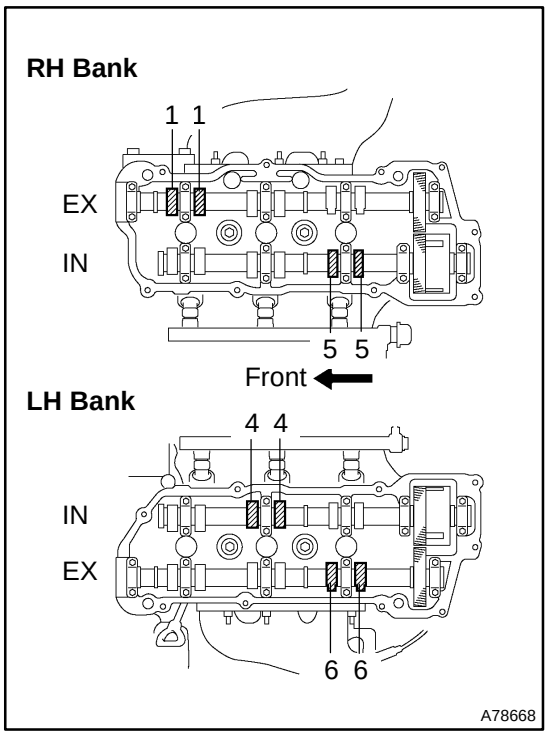

(e) Turn the crankshaft 2/3 of a revolution (240), and check the valves indicated in the illustration on the left.

(1) Using a feeler gauge, measure the clearance between the valve lifter and camshaft.

Valve clearance (Cold):

Item	Specified Condition
Intake	0.15 to 0.25 mm (0.006 to 0.010 in.)
Exhaust	0.25 to 0.35 mm (0.010 to 0.014 in.)

(2) Record valve clearance measurements that are out of the specified range. These measurements will be used later to determine the size of the adjustment shim to be installed.

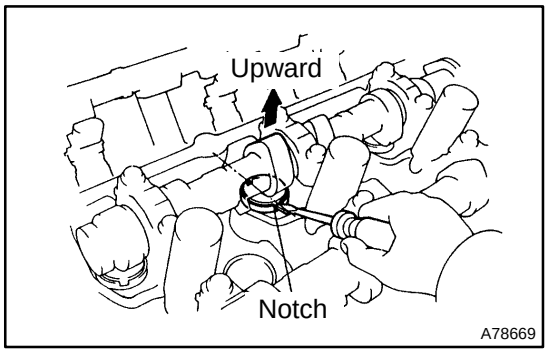

13. ADJUST VALVE CLEARANCE

(a) Turn the camshaft so that the cam lobe faces upward.

(b) Turn the valve lifter with a screwdriver so that the notches are perpendicular to the camshaft.

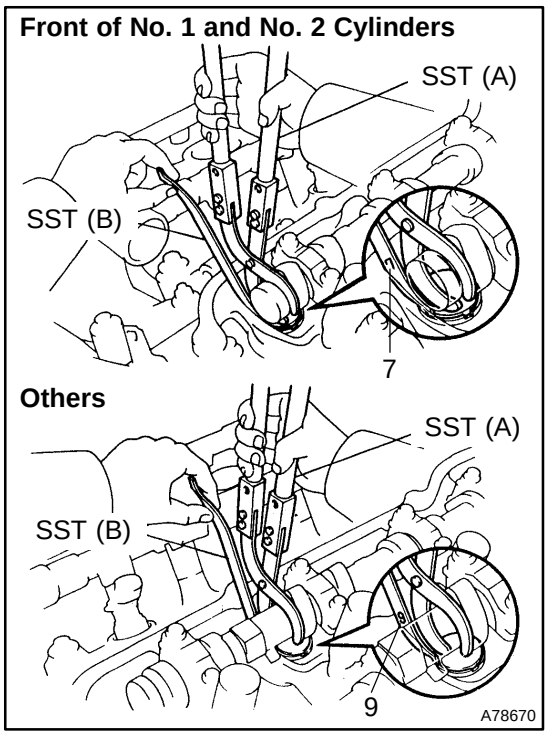

(c) Using SST (A), press down the valve lifter and place SST (B) between the camshaft and valve lifter. Remove SST (A).

SST 09248−55040 (09248−05410, 09248−05420)

HINT:

- Apply SST (B) at a slight angle on the side marked with ”9” or ”7” at the position shown in the illustration.
- When SST (B) is inserted too deeply, it will get pinched by the shim. To prevent it from being stuck, insert it gently from the intake side at a slight angle.

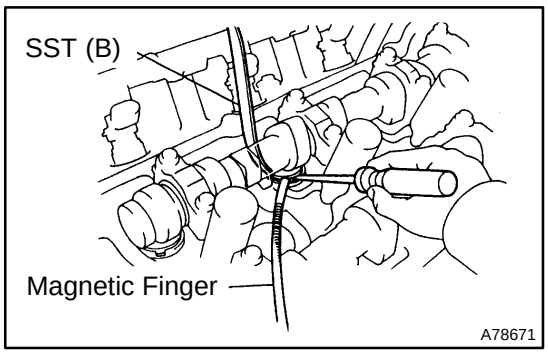

(d) Using a small screwdriver and magnetic finger, remove the adjusting shim.

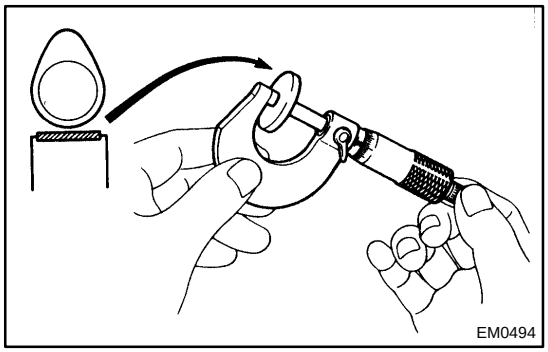

(e) Using a micrometer, measure the thickness of the removed shim.

(f) Calculate the thickness of a new shim so that the valve clearance comes within the specified value.

A	Thickness of new shim
B	Thickness of used shim
C	Measured valve clearance

Specified value (Cold):
Intake A = B + (C − 0.20 mm (0.0079 in.))
Exhaust A = B + (C − 0.30 mm (0.0118 in.))

(g) Select a new shim with a thickness as close as possible to the calculated values.

EXAMPLE (Intake):
Measured valve clearance = 0.45 mm (0.0177 in.)
0.45 mm (0.0177 in.) − 0.20 mm (0.0079 in.) = 0.25 mm (0.0098 in.)
(Measured − Specification = Excess clearance)
Used shim measurement = 2.80 mm (0.1102 in.)
0.25 mm (0.0098 in.) + 2.80 mm (0.1102 in.) = 3.05 mm (0.1201 in.)
(Excess clearance + Used shim = Ideal new shim)
Closest new shim = 3.05 mm (0.1201 in.)
Select No. 12 shim

HINT:

- Shims are available in 17 sizes in increments of 0.05 mm (0.0020 in.), from 2.50 mm (0.0984 in.) to 3.30 mm (0.1299 in.).
- Refer to adjusting shim selection chart on the following 2 pages.

Adjusting Shim Selection Chart (Intake)

| Measured clearance mm (in.) \ Installed shim thickness mm (in.) | 2.500 (0.0984) | 2.520 (0.0992) | 2.540 (0.1000) | 2.550 (0.1004) | 2.560 (0.1008) | 2.580 (0.1016) | 2.600 (0.1024) | 2.620 (0.1031) | 2.640 (0.1039) | 2.650 (0.1043) | 2.660 (0.1047) | 2.670 (0.1051) | 2.680 (0.1055) | 2.690 (0.1059) | 2.700 (0.1063) | 2.710 (0.1067) | 2.720 (0.1071) | 2.730 (0.1075) | 2.740 (0.1079) | 2.750 (0.1083) | 2.760 (0.1087) | 2.770 (0.1091) | 2.780 (0.1094) | 2.790 (0.1098) | 2.800 (0.1102) | 2.810 (0.1106) | 2.820 (0.1110) | 2.830 (0.1114) | 2.840 (0.1118) | 2.850 (0.1122) | 2.860 (0.1126) | 2.870 (0.1130) | 2.880 (0.1134) | 2.890 (0.1138) | 2.900 (0.1142) | 2.910 (0.1146) | 2.920 (0.1150) | 2.930 (0.1154) | 2.940 (0.1157) | 2.950 (0.1161) | 2.960 (0.1165) | 2.970 (0.1169) | 2.980 (0.1173) | 2.990 (0.1177) | 3.000 (0.1181) | 3.010 (0.1185) | 3.020 (0.1189) | 3.030 (0.1193) | 3.040 (0.1197) | 3.050 (0.1201) | 3.060 (0.1205) | 3.080 (0.1213) | 3.100 (0.1220) | 3.120 (0.1228) | 3.140 (0.1236) | 3.150 (0.1240) | 3.160 (0.1244) | 3.180 (0.1252) | 3.200 (0.1260) | 3.220 (0.1268) | 3.240 (0.1276) | 3.250 (0.1280) | 3.260 (0.1283) | 3.280 (0.1291) | 3.300 (0.1299) |
|---|---|---

Adjusting Shim Selection Chart (Exhaust)

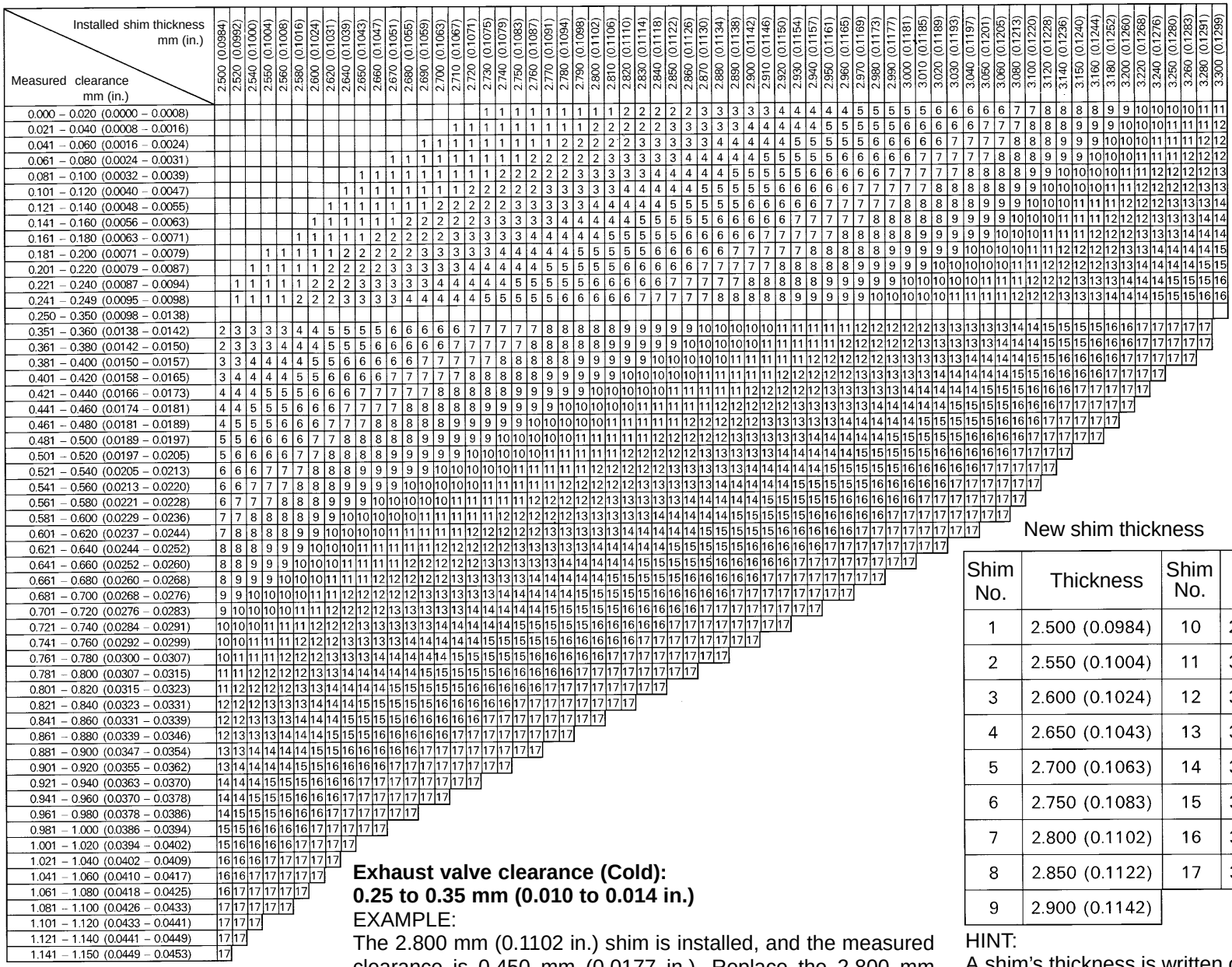

Exhaust valve clearance (Cold):
0.25 to 0.35 mm (0.010 to 0.014 in.)

EXAMPLE:

The 2.800 mm (0.1102 in.) shim is installed, and the measured clearance is 0.450 mm (0.0177 in.). Replace the 2.800 mm (0.1102 in.) shim with a new No. 10 shim.

New shim thickness mm (in.)

Shim No.	Thickness	Shim No.	Thickness
1	2.500 (0.0984)	10	2.950 (0.1161)
2	2.550 (0.1004)	11	3.000 (0.1181)
3	2.600 (0.1024)	12	3.050 (0.1201)
4	2.650 (0.1043)	13	3.100 (0.1220)
5	2.700 (0.1063)	14	3.150 (0.1240)
6	2.750 (0.1083)	15	3.200 (0.1260)
7	2.800 (0.1102)	16	3.250 (0.1280)
8	2.850 (0.1122)	17	3.300 (0.1299)
9	2.900 (0.1142)		

HINT:

A shim's thickness is written on its face in millimeters.

V00720

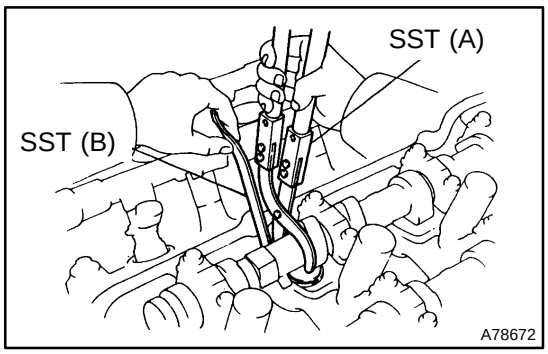

(h) Place a new adjusting shim on the valve lifter with the imprinted number facing down.
(i) Press down the valve lifter with SST (A), and remove SST (B).
SST 09248−55040 (09248−05410, 09248−05420)
(j) Recheck the valve clearance.

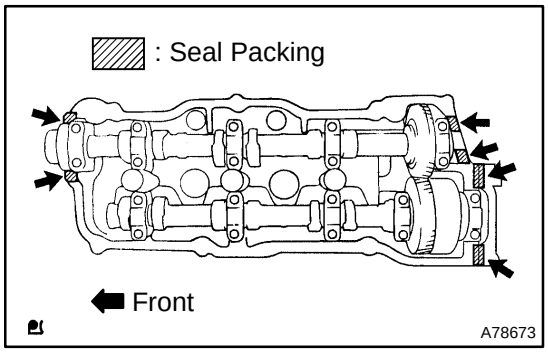

14. INSTALL CYLINDER HEAD COVER SUB−ASSY
(a) Apply seal packing to the cylinder head as shown in the illustration.
Seal packing: Part No. 08826−00080 or equivalent
NOTICE:
- **Remove any oil from the contact surface.**
- **Install the cylinder head cover within 3 minutes after applying seal packing.**
- **Do not start the engine for at least 2 hours after installing the cylinder head cover.**

(b) Install the cylinder head cover with the 9 bolts. Tighten the bolts uniformly in several steps.
Torque: 8.0 N·m (80 kgf·cm, 71 in.·lbf)
(c) Install the engine wire harness with the 3 nuts.
Torque: 8.4 N·m (85 kgf·cm, 74 in.·lbf)

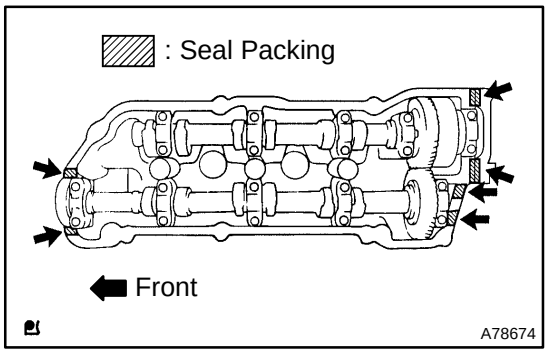

15. INSTALL CYLINDER HEAD COVER SUB−ASSY LH
(a) Apply seal packing to the cylinder head as shown in the illustration.
Seal packing: Part No. 08826−00080 or equivalent
NOTICE:
- **Remove any oil from the contact surface.**
- **Install the cylinder head cover within 3 minutes after applying seal packing.**
- **Do not start the engine for at least 2 hours after installing the cylinder head cover.**

(b) Install the cylinder head cover with the 9 bolts. Tighten the bolts uniformly in several steps.
Torque: 8.0 N·m (80 kgf·cm, 71 in.·lbf)
(c) Using an E6 torx® socket wrench, install the engine wire harness protector with the 2 bolts.

16. INSTALL IGNITION COIL ASSY
Torque: 8.0 N·m (80 kgf·cm, 71 in.·lbf)
17. INSTALL INTAKE AIR SURGE TANK
(a) Install a new gasket to the intake air surge tank.
(b) Install the intake air surge tank and emission control valve bracket with the 2 nuts.
Torque: 28 N·m (286 kgf·cm, 21 ft·lbf)
(c) Using a socket hexagon wrench 8, tighten the 4 bolts.
Torque: 28 N·m (286 kgf·cm, 21 ft·lbf)
(d) Install the surge tank stay No. 2 with the 2 bolts.
Torque: 20 N·m (199 kgf·cm, 15 ft·lbf)

(e) Install the surge tank stay No. 1 with the 2 bolts.
Torque: 20 N·m (199 kgf·cm, 15 ft·lbf)
(f) Install the engine hanger No. 1 with the 2 bolts.
Torque: 20 N·m (199 kgf·cm, 15 ft·lbf)
(g) Install the pressure feed tube with the 3 nuts.
Torque: 7.8 N·m (80 kgf·cm, 69 in.·lbf)
(h) Connect the ventilation hose.
(i) Connect the union to check valve hose.
(j) Connect the water by−pass hose No. 2.
(k) Connect the water by−pass hose No. 3.
(l) Connect the throttle motor connector.

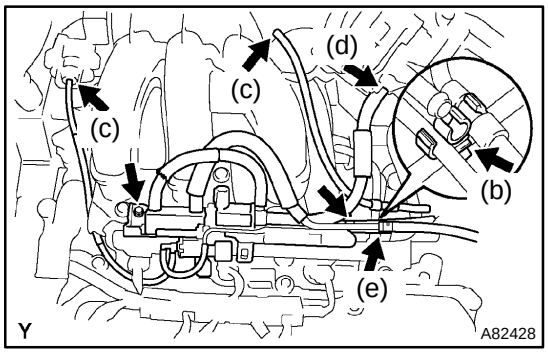

18. INSTALL EMISSION CONTROL VALVE SET
(a) Install the valve set with the 2 nuts.
(b) Install the clamp.
(c) Connect the 2 vacuum hoses.
(d) Connect the fuel vapor feed hose No. 2.
(e) Connect the fuel vapor feed hose No. 1.

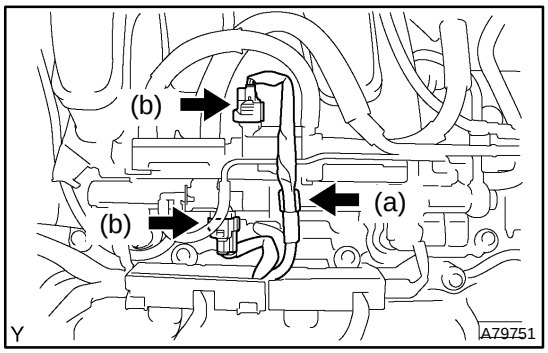

(f) Install the wire harness clamp.
(g) Connect the 2 VSV connectors.

19. INSTALL AIR CLEANER ASSEMBLY WITH HOSE
20. INSTALL FRONT SUSPENSION UPPER BRACE CENTER (W/ FRONT SUSPENSION BRACE UPPER CENTER)
Torque: 80 N·m (816 kgf·cm, 59 ft.·lbf)
21. INSTALL RADIATOR HOSE INLET
22. INSTALL V−BANK COVER SUB−ASSY
(a) Fit the 2 retainers and install the V−bank cover.
(b) Using a socket hexagon wrench 5, tighten the 3 nuts.
Torque: 7.9 N·m (81 kgf·cm, 70 in.·lbf)
23. INSTALL FRONT FENDER APRON SEAL RH
24. ADD ENGINE COOLANT (See page 16−27)
25. CHECK FOR ENGINE COOLANT LEAKS (See page 16−21)

PARTIAL ENGINE ASSY (1MZ−FE/3MZ−FE)

141IT−02

COMPONENTS

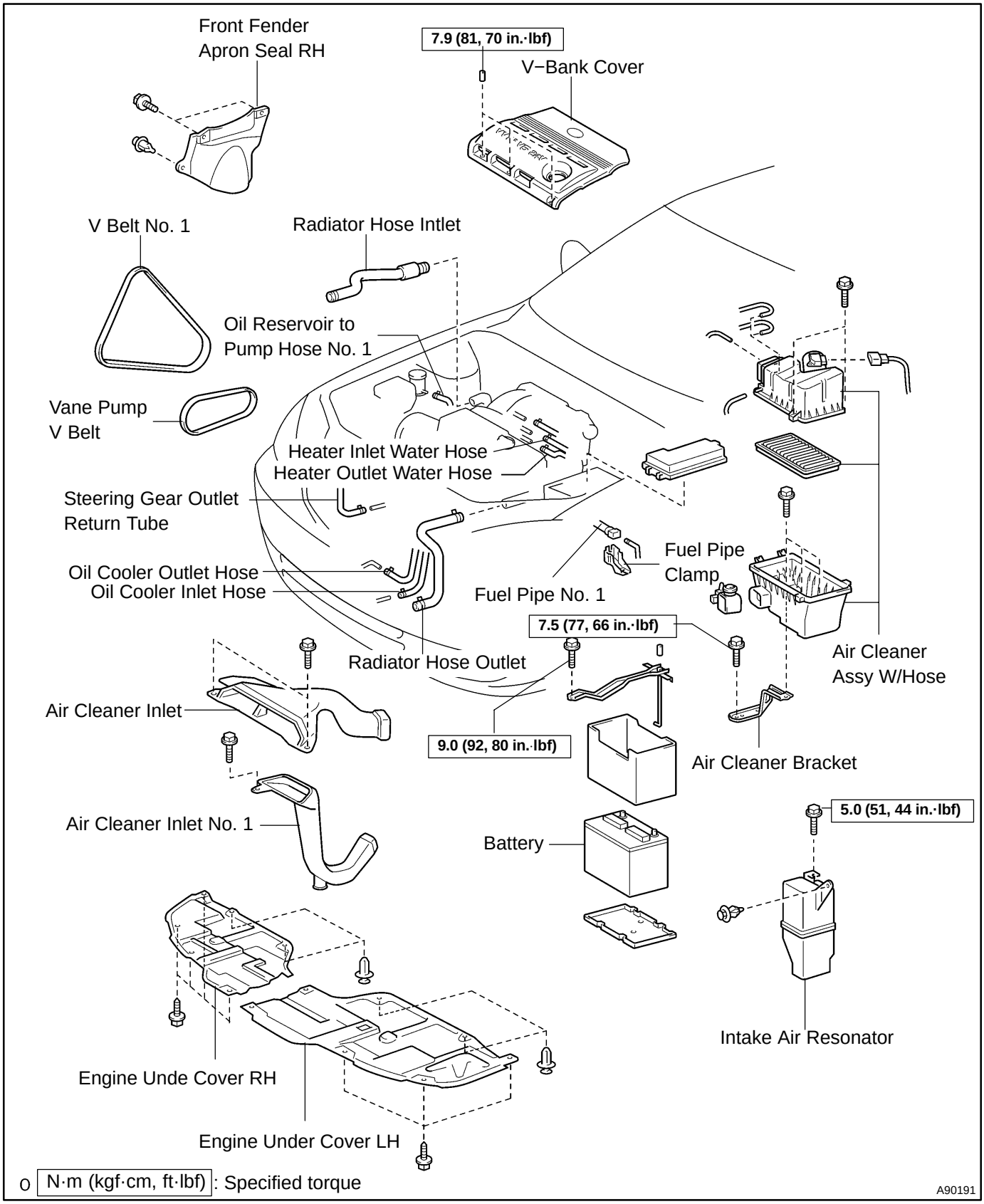

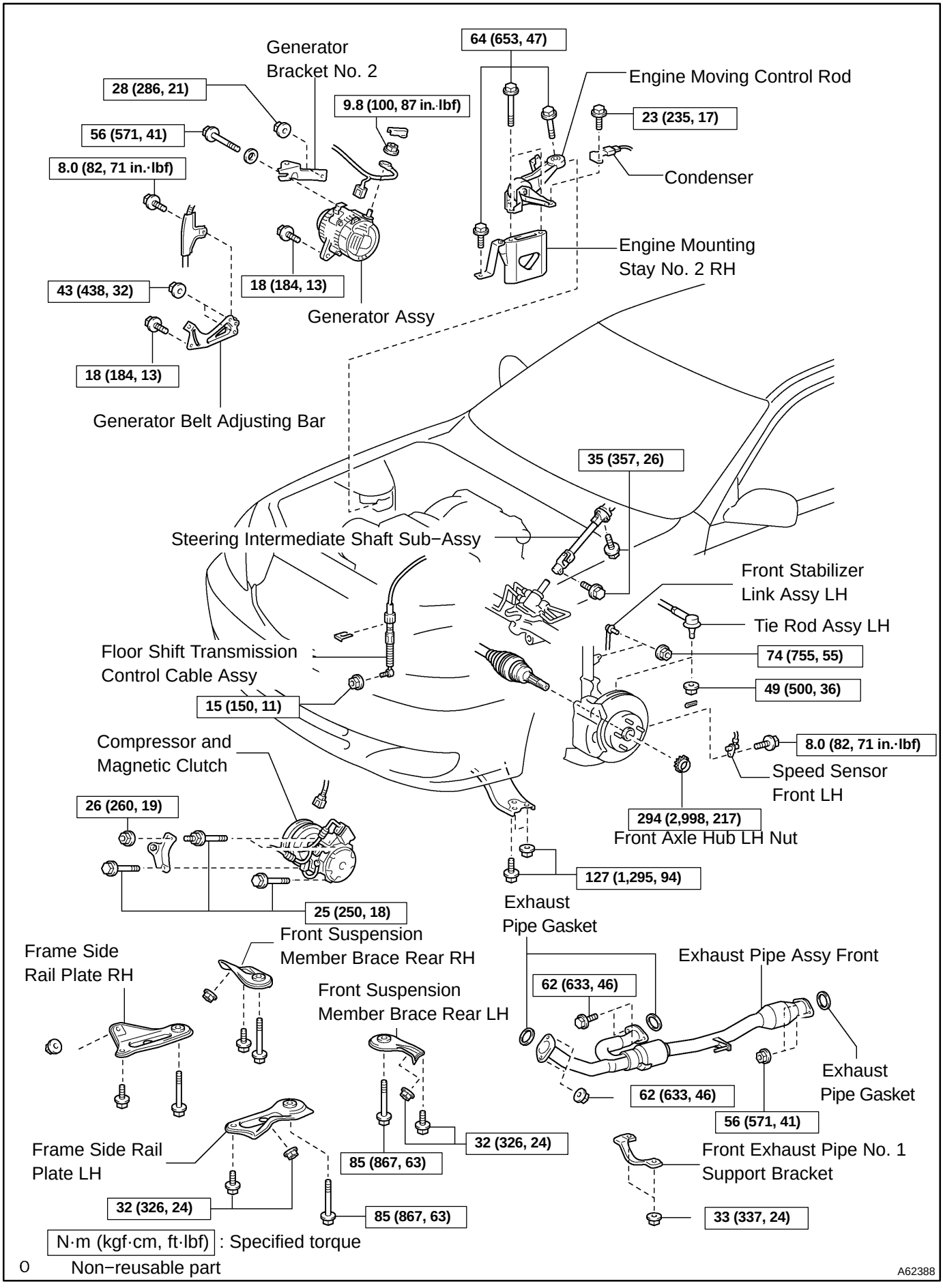
Generator Bracket No. 2
28 (286, 21)
56 (571, 41)
8.0 (82, 71 in.·lbf)
9.8 (100, 87 in.·lbf)
64 (653, 47)
Engine Moving Control Rod
23 (235, 17)
Condenser
Engine Mounting Stay No. 2 RH
18 (184, 13)
Generator Assy
43 (438, 32)
18 (184, 13)
Generator Belt Adjusting Bar
35 (357, 26)
Steering Intermediate Shaft Sub−Assy
Front Stabilizer Link Assy LH
Tie Rod Assy LH
74 (755, 55)
49 (500, 36)
Floor Shift Transmission Control Cable Assy
15 (150, 11)
Compressor and Magnetic Clutch
26 (260, 19)
25 (250, 18)
8.0 (82, 71 in.·lbf)
Speed Sensor Front LH
294 (2,998, 217)
Front Axle Hub LH Nut
127 (1,295, 94)
Exhaust Pipe Gasket
Frame Side Rail Plate RH
Front Suspension Member Brace Rear RH
Front Suspension Member Brace Rear LH
Exhaust Pipe Assy Front
62 (633, 46)
62 (633, 46)
Exhaust Pipe Gasket
56 (571, 41)
Frame Side Rail Plate LH
32 (326, 24)
85 (867, 63)
32 (326, 24)
85 (867, 63)
Front Exhaust Pipe No. 1 Support Bracket
33 (337, 24)
N·m (kgf·cm, ft·lbf) : Specified torque
O Non−reusable part
A62388

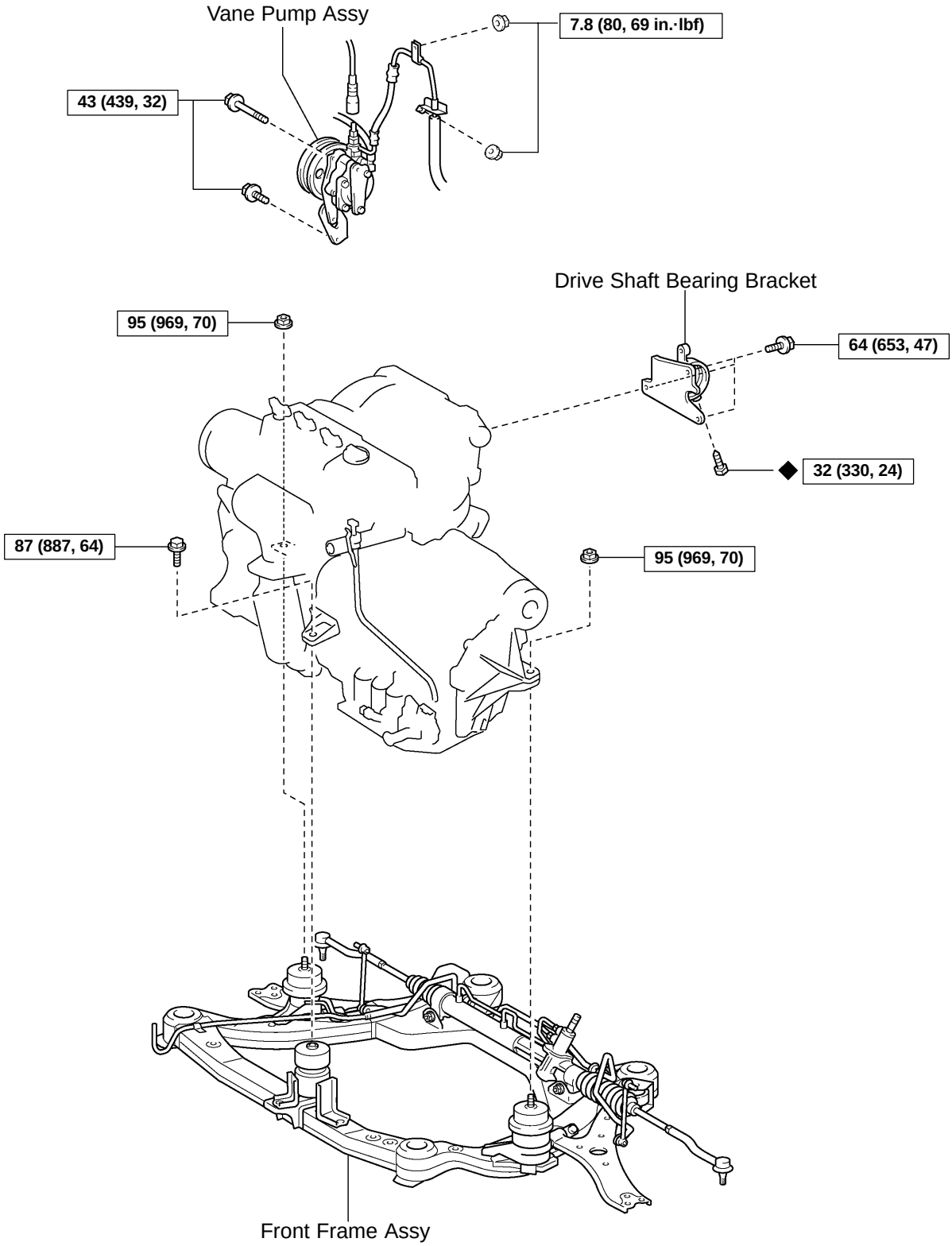

N·m (kgf·cm, ft·lbf): Specified torque

Non−reusable part

A60467

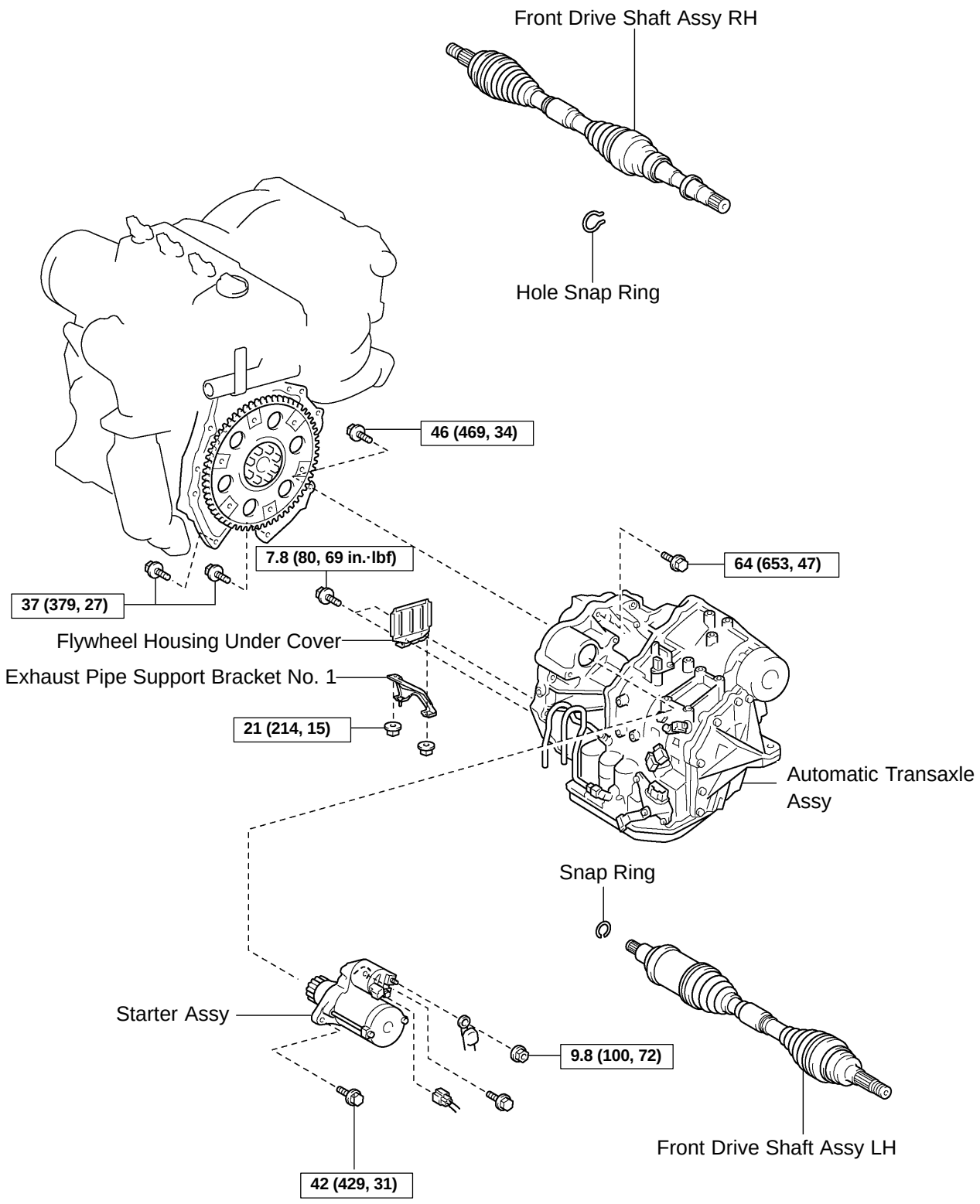

N·m (kgf·cm, ft·lbf): Specified torque

Non−reusable part

O

A91473

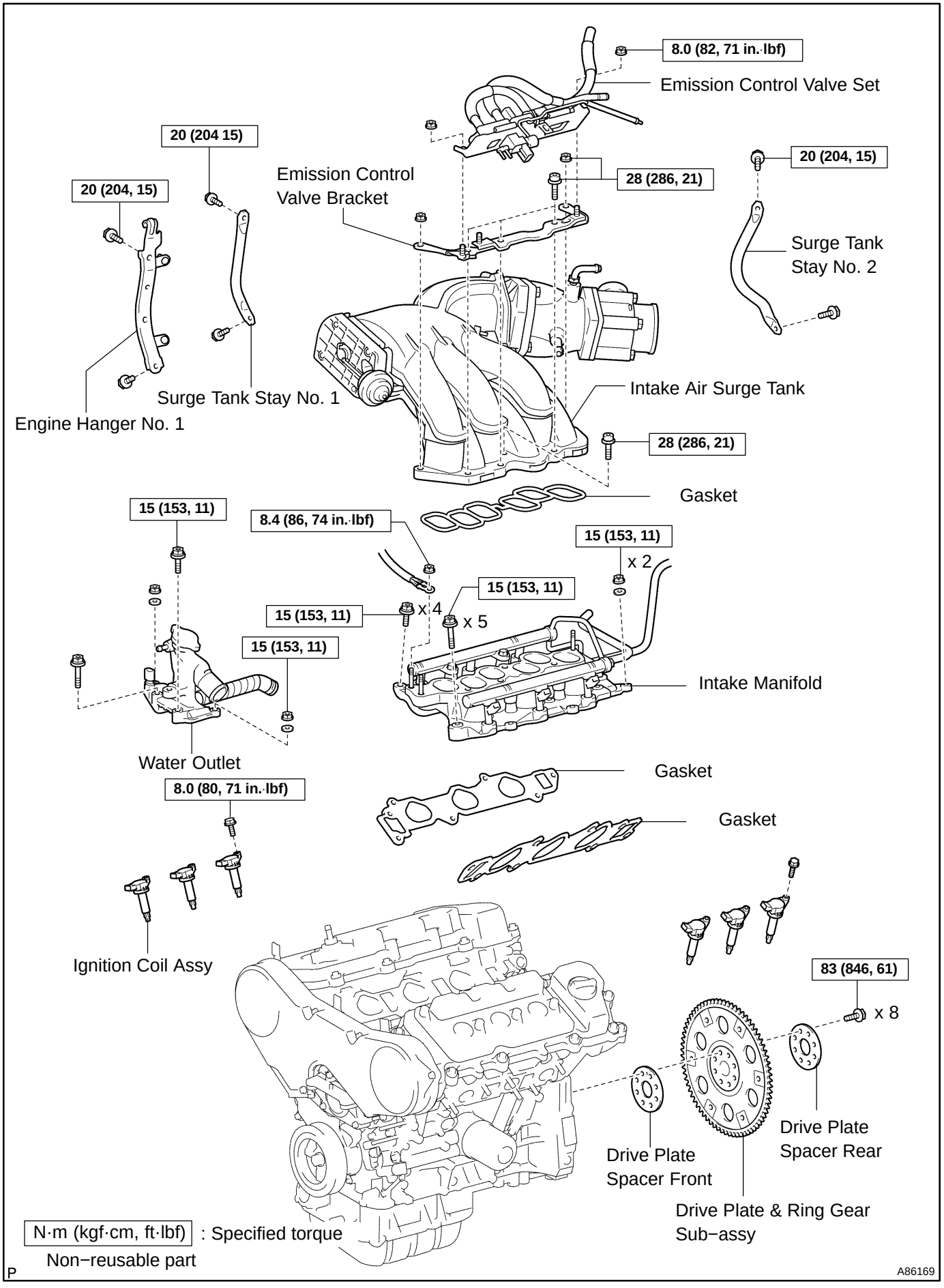
8.0 (82, 71 in.·lbf)
Emission Control Valve Set
20 (204 15)
20 (204, 15)
Emission Control
Valve Bracket
28 (286, 21)
20 (204, 15)
Surge Tank
Stay No. 2
Surge Tank Stay No. 1
Engine Hanger No. 1
Intake Air Surge Tank
28 (286, 21)
Gasket
15 (153, 11)
8.4 (86, 74 in.·lbf)
15 (153, 11)
x 2
15 (153, 11)
x 4
15 (153, 11)
x 5
15 (153, 11)
Intake Manifold
Water Outlet
Gasket
8.0 (80, 71 in.·lbf)
Gasket
Ignition Coil Assy
83 (846, 61)
x 8
Drive Plate
Spacer Rear
Drive Plate
Spacer Front
Drive Plate & Ring Gear
Sub−assy
N·m (kgf·cm, ft·lbf) : Specified torque
Non−reusable part
P
A86169

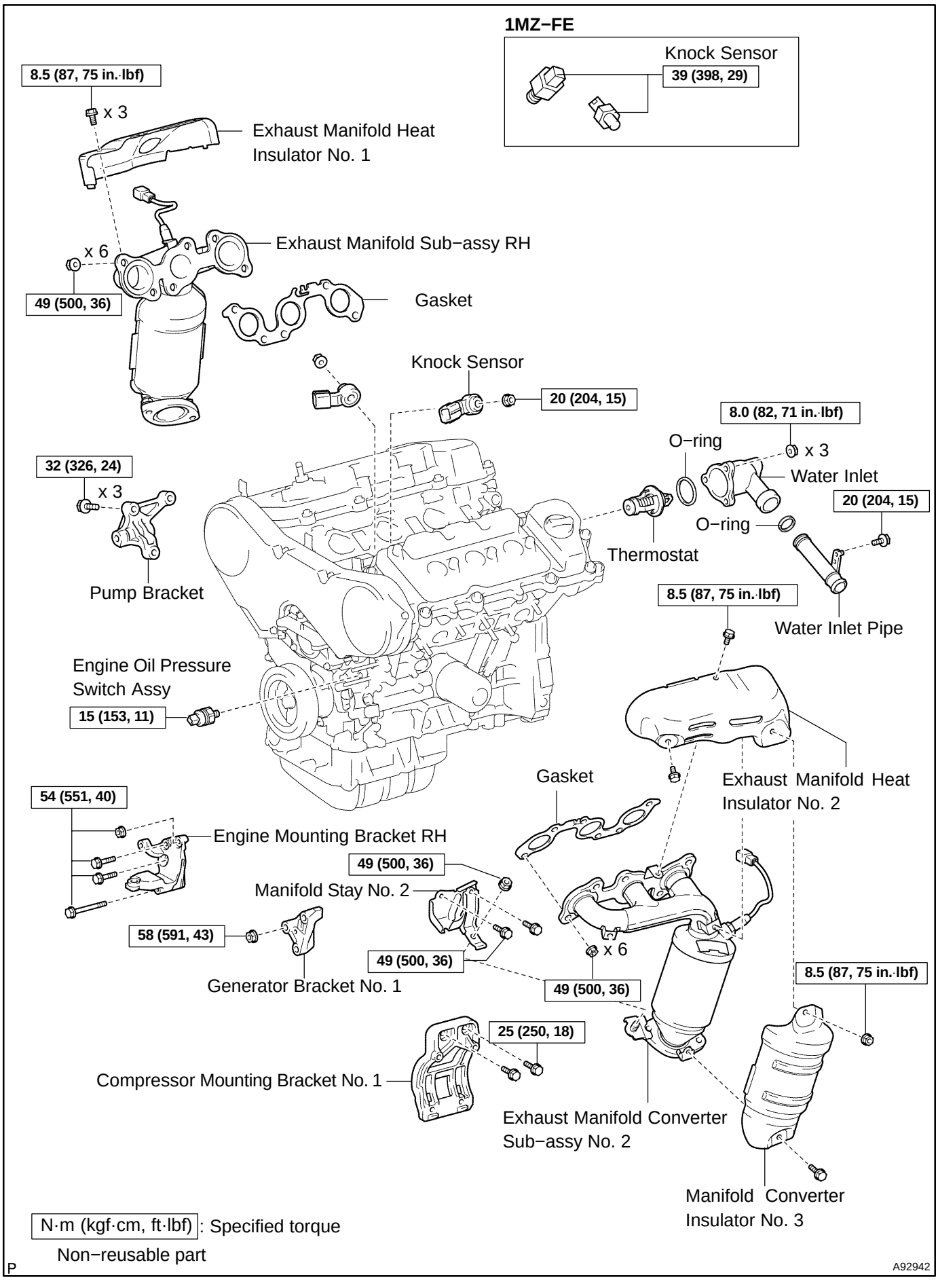
1MZ−FE
Knock Sensor
39 (398, 29)
8.5 (87, 75 in.·lbf)
x 3
Exhaust Manifold Heat Insulator No. 1
x 6
49 (500, 36)
Exhaust Manifold Sub−assy RH
Gasket
Knock Sensor
20 (204, 15)
8.0 (82, 71 in.·lbf)
O−ring
x 3
Water Inlet
32 (326, 24)
x 3
Pump Bracket
Thermostat
O−ring
20 (204, 15)
Water Inlet Pipe
8.5 (87, 75 in.·lbf)
Engine Oil Pressure Switch Assy
15 (153, 11)
Gasket
Exhaust Manifold Heat Insulator No. 2
54 (551, 40)
Engine Mounting Bracket RH
49 (500, 36)
Manifold Stay No. 2
58 (591, 43)
Generator Bracket No. 1
x 6
49 (500, 36)
49 (500, 36)
8.5 (87, 75 in.·lbf)
25 (250, 18)
Compressor Mounting Bracket No. 1
Exhaust Manifold Converter Sub−assy No. 2
Manifold Converter Insulator No. 3
N·m (kgf·cm, ft·lbf): Specified torque
Non−reusable part
P
A92942

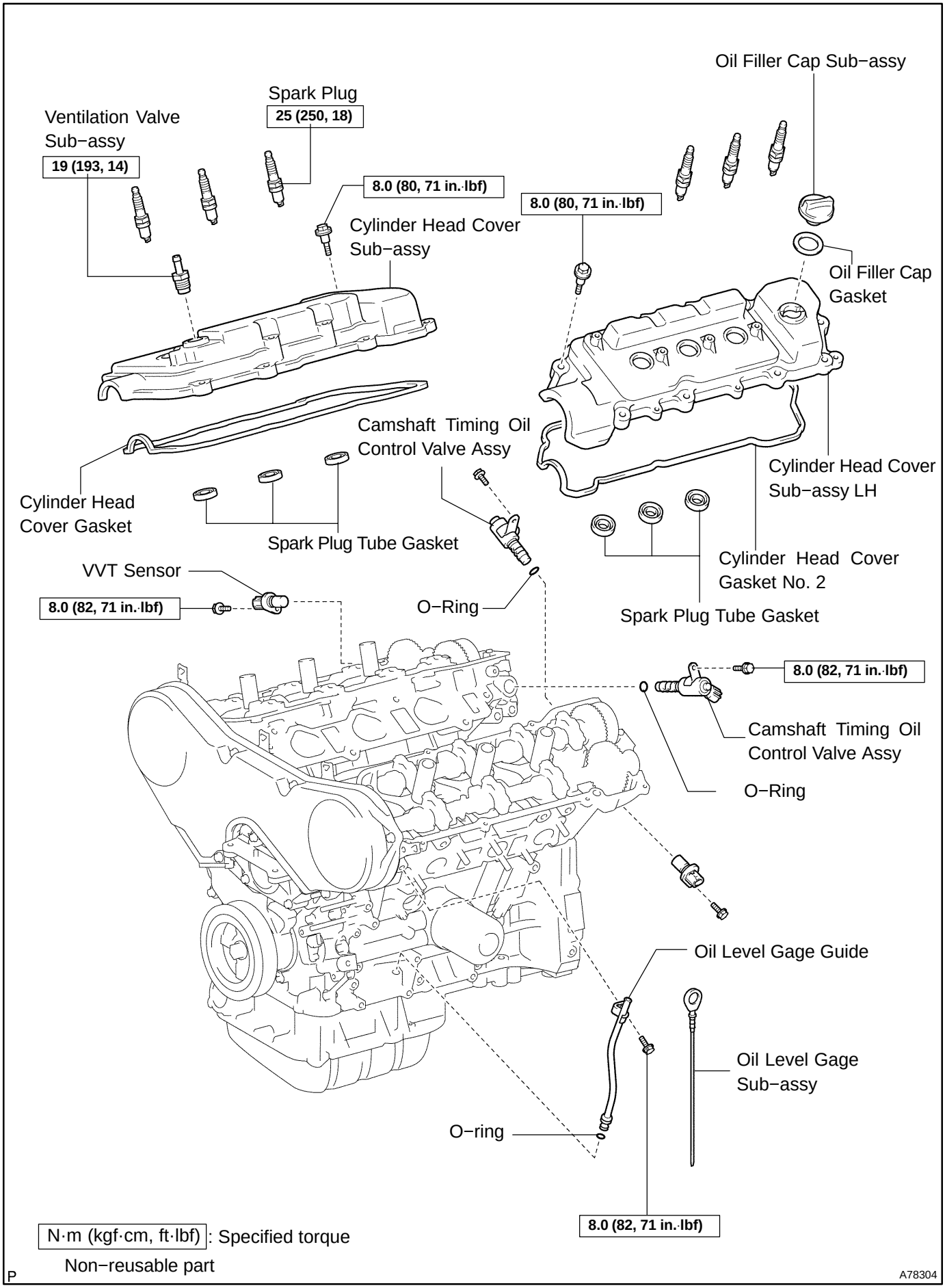
Oil Filler Cap Sub−assy
Spark Plug
25 (250, 18)
Ventilation Valve Sub−assy
19 (193, 14)
8.0 (80, 71 in.·lbf)
Cylinder Head Cover Sub−assy
8.0 (80, 71 in.·lbf)
Oil Filler Cap Gasket
Camshaft Timing Oil Control Valve Assy
Cylinder Head Cover Sub−assy LH
Cylinder Head Cover Gasket
Spark Plug Tube Gasket
Cylinder Head Cover Gasket No. 2
VVT Sensor
8.0 (82, 71 in.·lbf)
O−Ring
Spark Plug Tube Gasket
8.0 (82, 71 in.·lbf)
Camshaft Timing Oil Control Valve Assy
O−Ring
Oil Level Gage Guide
Oil Level Gage Sub−assy
O−ring
8.0 (82, 71 in.·lbf)
N·m (kgf·cm, ft·lbf): Specified torque
Non−reusable part
P
A78304

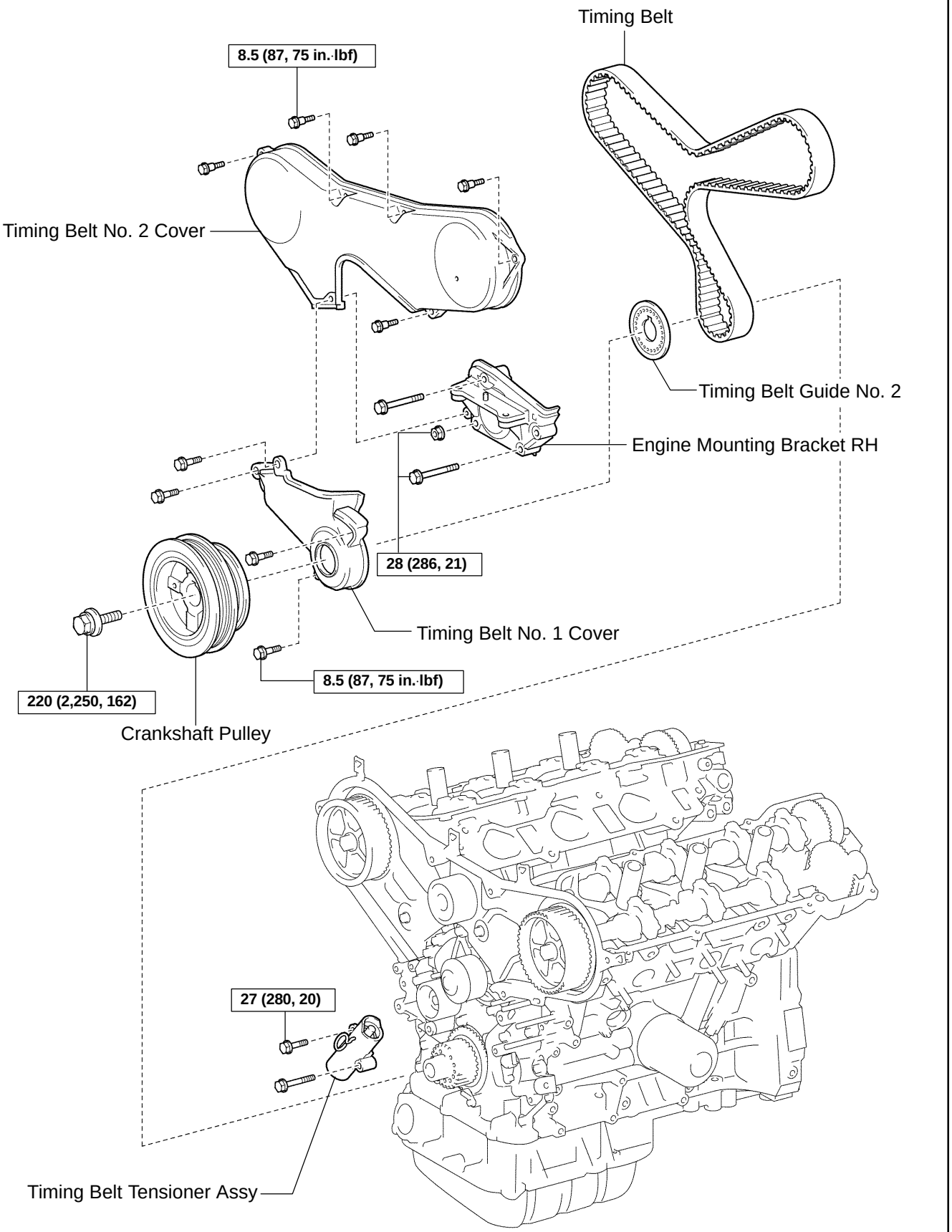

N·m (kgf·cm, ft·lbf): Specified torque

P

A78305

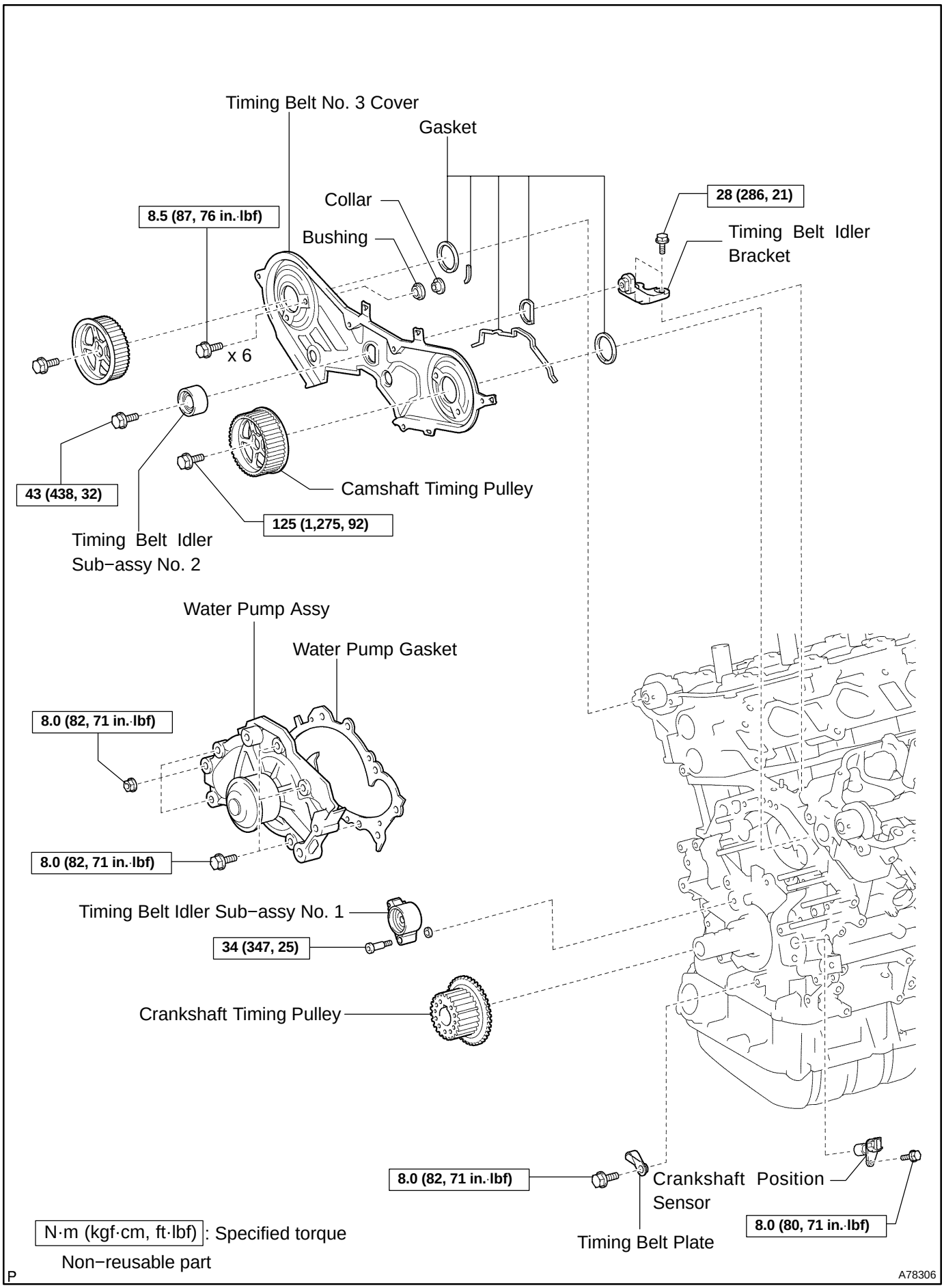
Timing Belt No. 3 Cover
Gasket
Collar
Bushing
8.5 (87, 76 in.·lbf)
x 6
28 (286, 21)
Timing Belt Idler Bracket
43 (438, 32)
Timing Belt Idler Sub−assy No. 2
Camshaft Timing Pulley
125 (1,275, 92)
Water Pump Assy
Water Pump Gasket
8.0 (82, 71 in.·lbf)
8.0 (82, 71 in.·lbf)
Timing Belt Idler Sub−assy No. 1
34 (347, 25)
Crankshaft Timing Pulley
8.0 (82, 71 in.·lbf)
Crankshaft Position Sensor
8.0 (80, 71 in.·lbf)
Timing Belt Plate
N·m (kgf·cm, ft·lbf): Specified torque
Non−reusable part
P
A78306

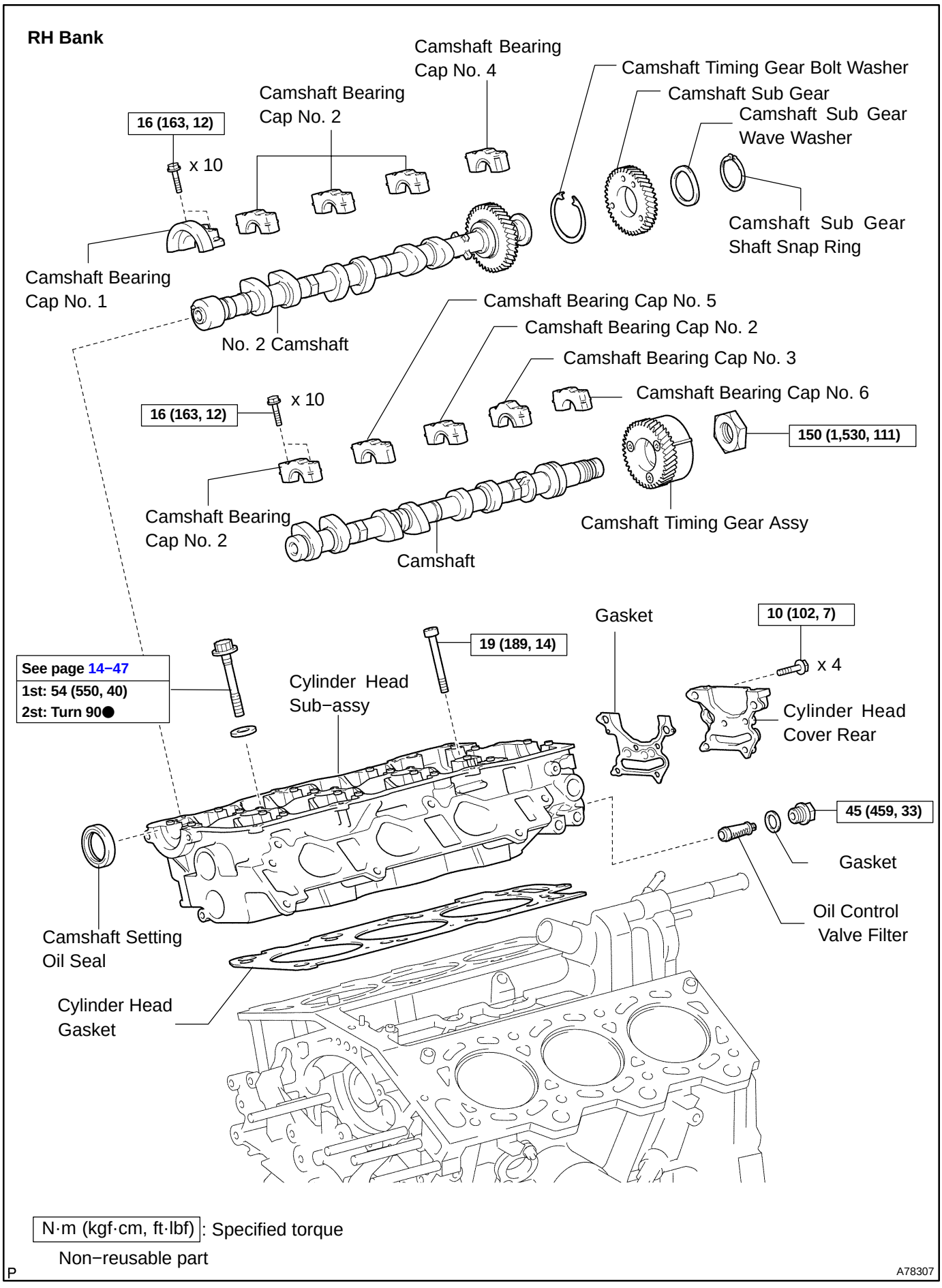

N·m (kgf·cm, ft·lbf): Specified torque

Non−reusable part

P

A78307

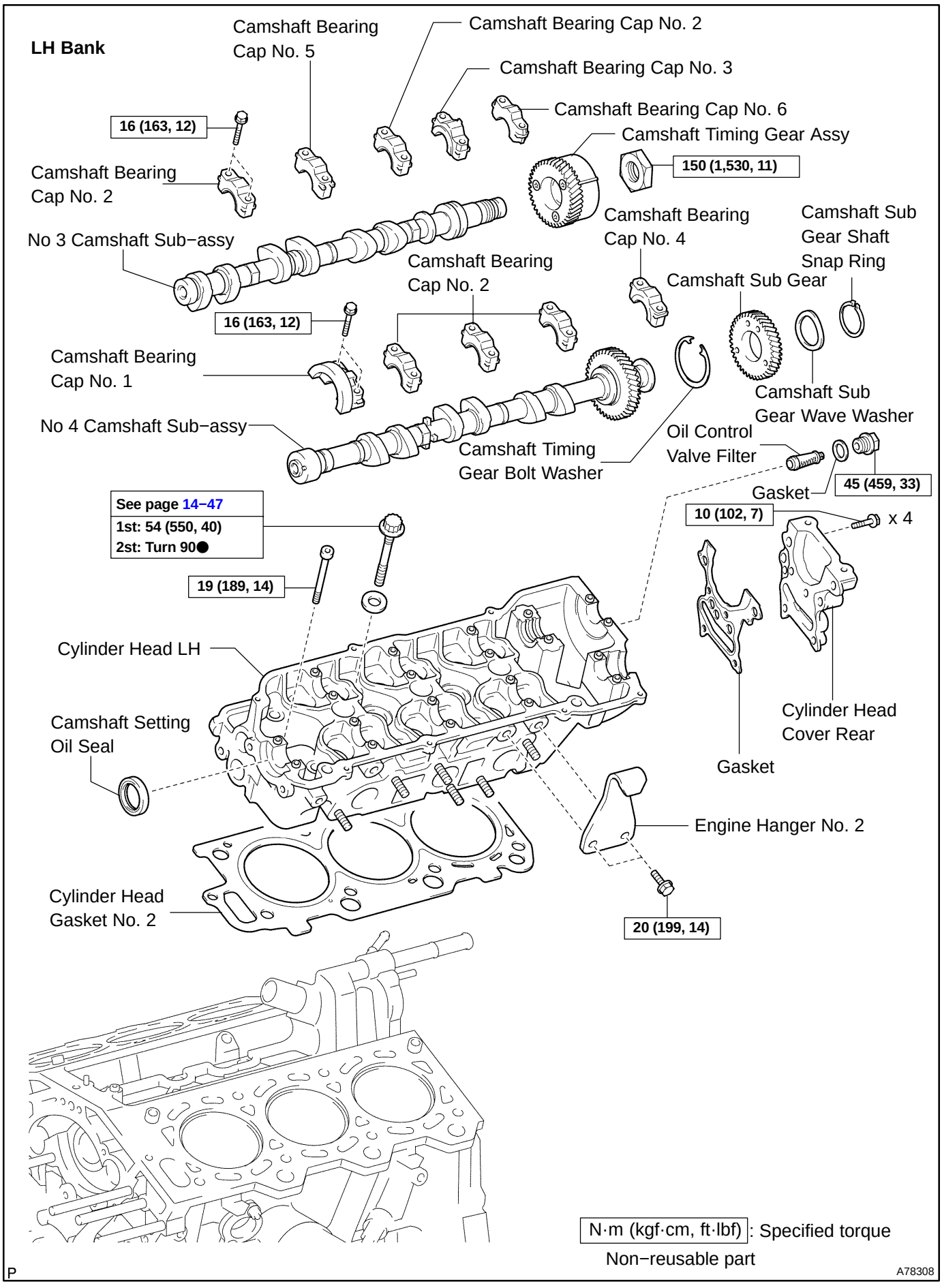
LH Bank
Camshaft Bearing Cap No. 5
Camshaft Bearing Cap No. 2
Camshaft Bearing Cap No. 3
Camshaft Bearing Cap No. 6
Camshaft Timing Gear Assy
16 (163, 12)
150 (1,530, 11)
Camshaft Bearing Cap No. 2
No 3 Camshaft Sub−assy
Camshaft Bearing Cap No. 4
Camshaft Sub Gear Shaft Snap Ring
Camshaft Bearing Cap No. 2
Camshaft Sub Gear
16 (163, 12)
Camshaft Bearing Cap No. 1
Camshaft Sub Gear Wave Washer
No 4 Camshaft Sub−assy
Oil Control Valve Filter
Camshaft Timing Gear Bolt Washer
45 (459, 33)
Gasket
See page 14−47
1st: 54 (550, 40)
2st: Turn 90●
10 (102, 7)
x 4
19 (189, 14)
Cylinder Head LH
Camshaft Setting Oil Seal
Cylinder Head Cover Rear
Gasket
Engine Hanger No. 2
Cylinder Head Gasket No. 2
20 (199, 14)
N·m (kgf·cm, ft·lbf): Specified torque
Non−reusable part
P
A78308

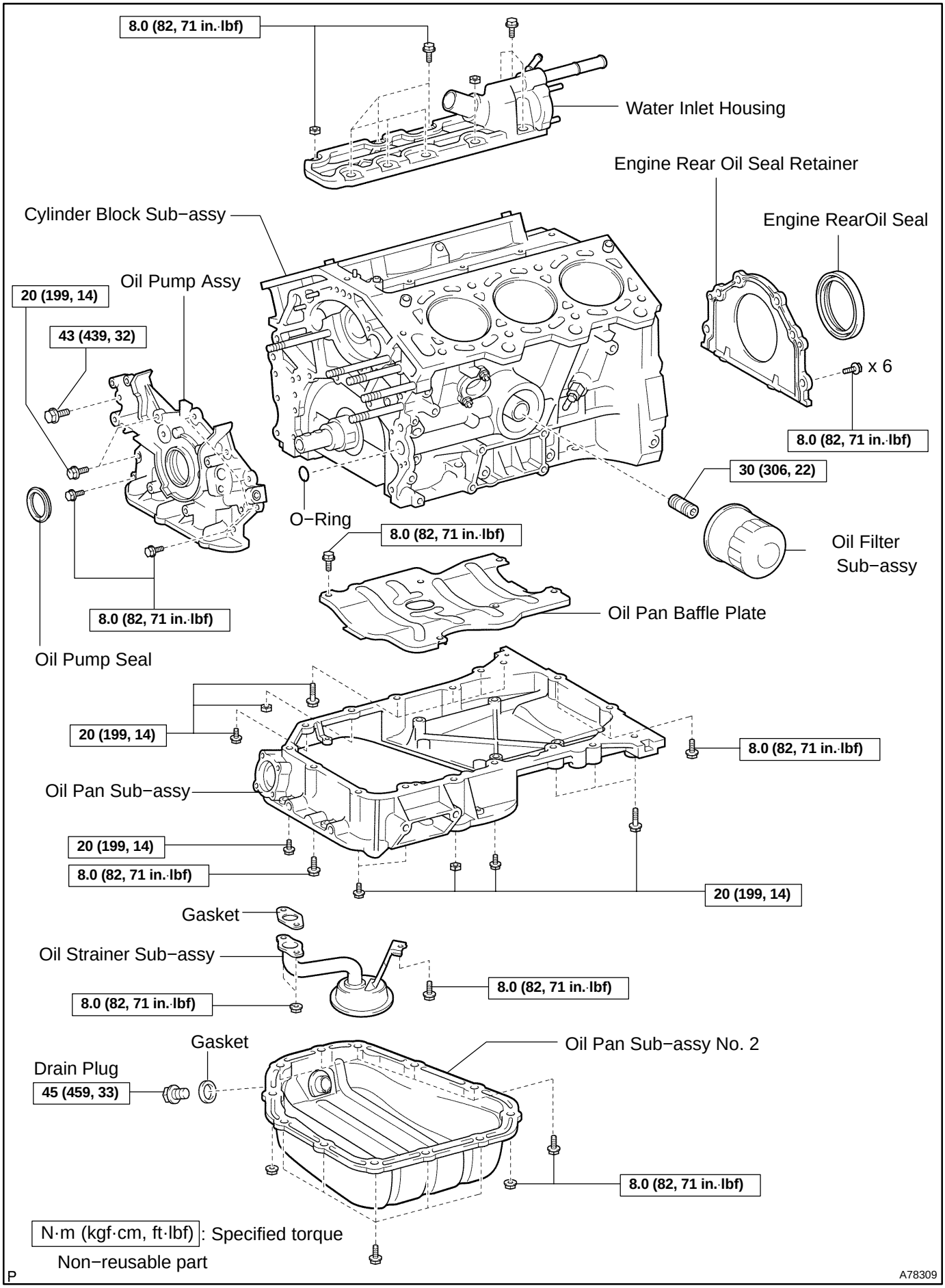
8.0 (82, 71 in.·lbf)
Water Inlet Housing
Engine Rear Oil Seal Retainer
Cylinder Block Sub−assy
Engine RearOil Seal
Oil Pump Assy
20 (199, 14)
43 (439, 32)
x 6
8.0 (82, 71 in.·lbf)
30 (306, 22)
O−Ring
8.0 (82, 71 in.·lbf)
Oil Filter Sub−assy
Oil Pan Baffle Plate
8.0 (82, 71 in.·lbf)
Oil Pump Seal
20 (199, 14)
8.0 (82, 71 in.·lbf)
Oil Pan Sub−assy
20 (199, 14)
8.0 (82, 71 in.·lbf)
20 (199, 14)
Gasket
Oil Strainer Sub−assy
8.0 (82, 71 in.·lbf)
8.0 (82, 71 in.·lbf)
Gasket
Oil Pan Sub−assy No. 2
Drain Plug
45 (459, 33)
8.0 (82, 71 in.·lbf)
N·m (kgf·cm, ft·lbf): Specified torque
Non−reusable part
P
A78309

141IX−02

REPLACEMENT

1. **WORK FOR PREVENTING GASOLINE FROM SPILLING OUT (See page 11−26)**
2. **REMOVE FRONT WHEELS**
3. **REMOVE ENGINE UNDER COVER RH**
4. **REMOVE ENGINE UNDER COVER LH**
5. **REMOVE FRONT FENDER APRON SEAL RH**
6. **DRAIN ENGINE OIL**
7. **DRAIN ENGINE COOLANT (See page 16−27)**
8. **DRAIN AUTOMATIC TRANSAXLE FLUID**
9. **REMOVE BATTERY**
10. **REMOVE V (COOLER COMPRESSOR TO CRANKSHAFT PULLEY) BELT NO.1 (See page 14−140)**
11. **REMOVE VANE PUMP V BELT (See page 14−140)**

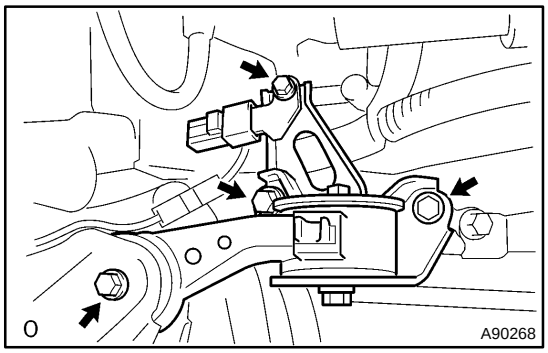

12. REMOVE ENGINE MOVING CONTROL ROD

(a) Remove the 4 bolts and control rod.

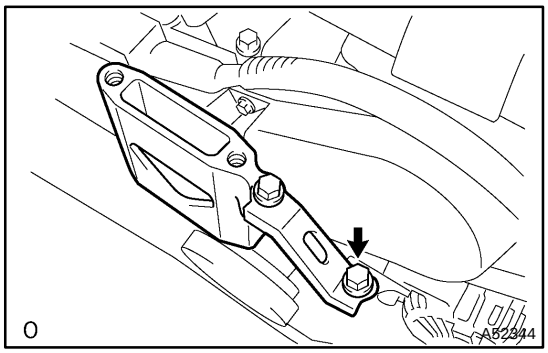

13. REMOVE ENGINE MOUNTING STAY NO.2 RH

(a) Remove the bolt, mounting stay No. 2 RH and mounting bracket No. 2 RH.

14. REMOVE UNION TO CHECK VALVE HOSE

(a) Remove the vacuum hose for the brake booster.

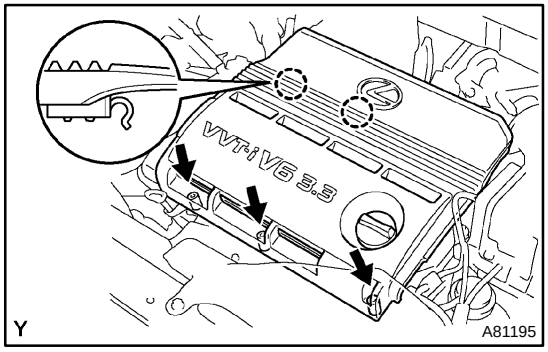

15. REMOVE V−BANK COVER SUB−ASSY

(a) Using a 5 mm hexagon wrench, remove the 3 nuts.

(b) Disconnect the 2 clips, and remove the cover.

16. REMOVE AIR CLEANER INLET ASSY

17. REMOVE AIR CLEANER ASSEMBLY WITH HOSE

18. REMOVE AIR CLEANER BRACKET

19. REMOVE AIR CLEANER INLET NO.1

20. REMOVE INTAKE AIR RESONATOR SUB−ASSY

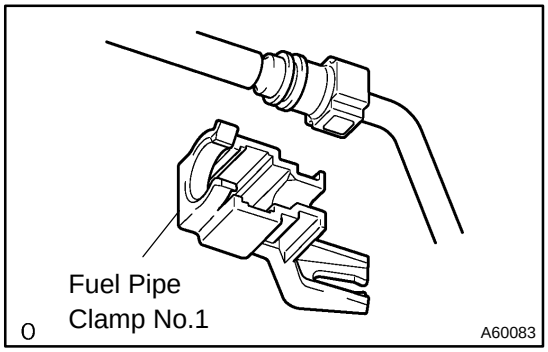

21. SEPARATE FUEL PIPE SUB−ASSY NO.1

(a) Remove the fuel pipe clamp.

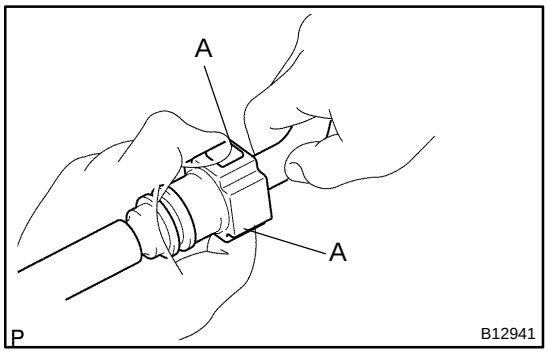

(b) Disconnect the connector from the tube while pinching part A with fingers as shown in the illustration.

NOTICE:

- **Check for contamination in the pipe and around the connector. Clean if necessary and then disconnect the connector.**
- **Disconnect the connector with your hands.**
- **Do not bend, fold or rotate the nylon tube.**
- **If the pipe and connector are stuck together, push and pull the connector until it comes free.**
- **Put the pipe and connector ends in vinyl bags to prevent damage and contamination.**

22. REMOVE RADIATOR HOSE INLET

23. REMOVE RADIATOR HOSE OUTLET

24. DISCONNECT OIL COOLER INLET HOSE

25. DISCONNECT OIL COOLER OUTLET HOSE

26. DISCONNECT HEATER INLET WATER HOSE

27. DISCONNECT HEATER OUTLET WATER HOSE

28. REMOVE GLOVE COMPARTMENT DOOR ASSY

29. DISCONNECT ENGINE WIRE

(a) Disconnect the engine wire from the ECM and J/B.

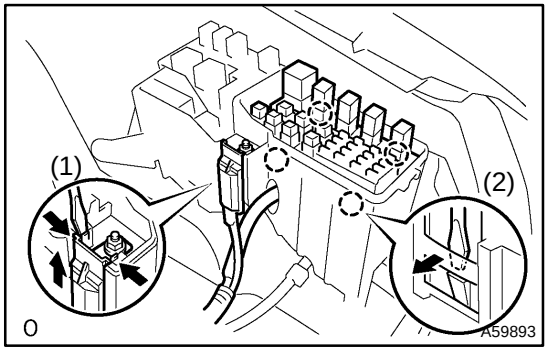

(b) Disconnect the engine wire from the engine room J/B.

(1) Remove the nut and separate the wire harness.

(2) Using a screwdriver, unlock the engine room junction block. Disconnect the engine wire by pulling it upward.

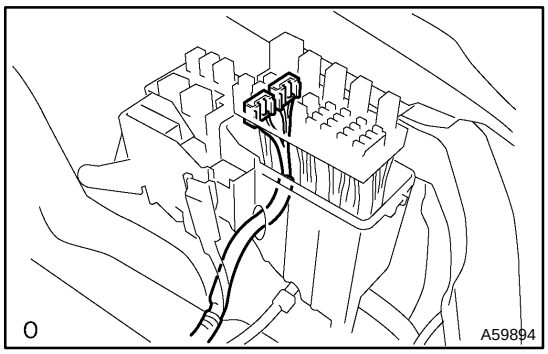

(3) Disconnect the connector.
(c) Pull out the engine wire.
(d) Remove the body ground.

30. DISCONNECT FLOOR SHIFT CABLE TRANSMISSION CONTROL SELECT (See page 40−65)

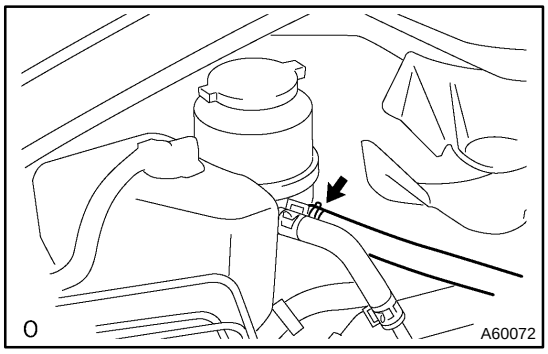

31. DISCONNECT OIL RESERVOIR TO PUMP HOSE NO.1

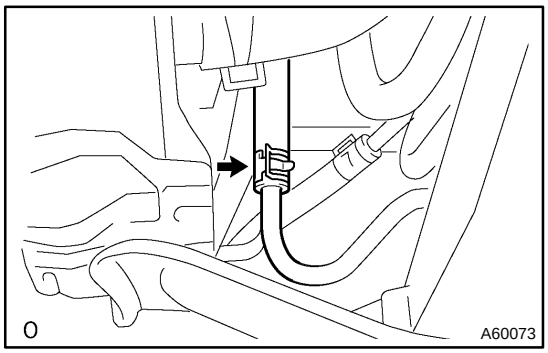

32. DISCONNECT STEERING GEAR OUTLET RETURN TUBE

33. REMOVE EXHAUST PIPE NO.1 SUPPORT BRACKET
34. REMOVE EXHAUST PIPE ASSY FRONT
35. DISCONNECT FRONT STABILIZER LINK ASSY LH
(a) Using a 6 mm socket hexagon wrench, hold the ball stud.
(b) Remove the nut and disconnect the stabilizer link.
36. DISCONNECT FRONT STABILIZER LINK ASSY RH
HINT:
Use the same procedures described for the LH side.

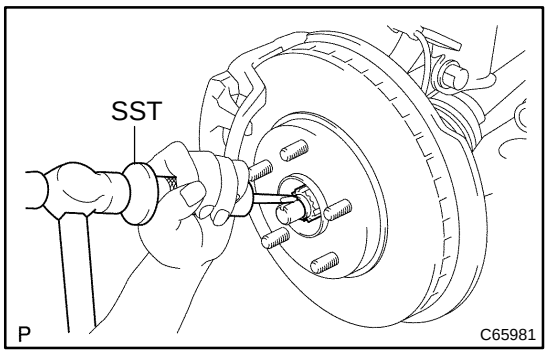

37. REMOVE FRONT AXLE HUB LH NUT

(a) Using SST and a hammer, strike the lock nut covering to remove it.
SST 09930−00010

NOTICE:

- **Set the drive shaft's groove so that it faces up. Then use the SST and hammer.**
- **Remove the covering from the lock nut completely or the screw of the drive shaft may be damaged.**
- **Do not sharpen the tip of the SST.**

(b) Using a 30 mm socket wrench, remove the lock nut.

38. REMOVE FRONT AXLE HUB RH NUT

HINT:
Use the same procedures described for the LH side.

39. DISCONNECT SPEED SENSOR FRONT LH

(a) Remove the bolt and disconnect the speed sensor from the steering knuckle.

NOTICE:
Keep the speed sensor tip and connection free from foreign matter.

40. DISCONNECT SPEED SENSOR FRONT RH

HINT:
Use the same procedures described for the LH side.

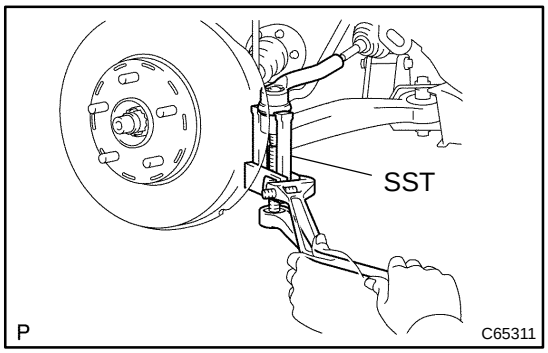

41. DISCONNECT TIE ROD ASSY LH

(a) Remove the cotter pin and nut.
(b) Using SST, disconnect the tie rod end from the steering knuckle.
SST 09628−62011

NOTICE:
Do not damage the dust cover of the ball joint.

42. DISCONNECT TIE ROD ASSY RH

HINT:
Use the same procedures described for the LH side.

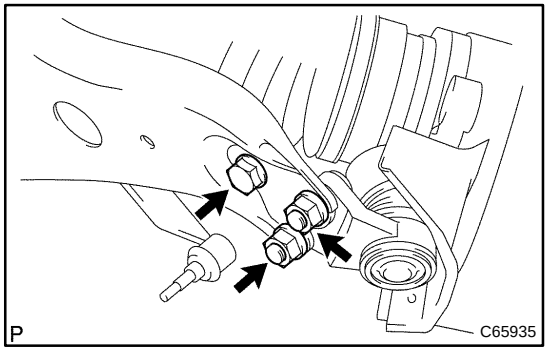

43. DISCONNECT FRONT SUSPENSION ARM SUB−ASSY LOWER NO.1 LH

(a) Remove the bolt and 2 nuts, and separate the front suspension arm from the lower ball joint.
(b) Using a plastic hammer, disconnect the drive shaft from the axle hub.

44. DISCONNECT FRONT SUSPENSION ARM SUB−ASSY LOWER NO.1 RH

HINT:

Use the same procedures described for the LH side.

45. REMOVE STARTER ASSY (See page 19−29)

46. REMOVE EXHAUST PIPE SUPPORT BRACKET NO.1

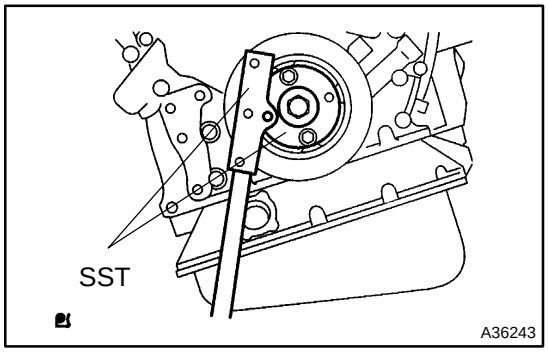

47. REMOVE DRIVE PLATE & TORQUE CONVERTER CLUTCH SETTING BOLT

(a) Using SST, hold the crankshaft.

SST 09213−54015 (91651−60855), 09330−00021

(b) Remove the 2 bolts and flywheel housing under cover.

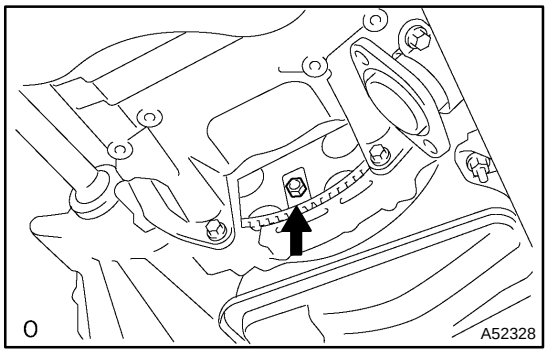

(c) Remove the 6 torque converter setting bolts.

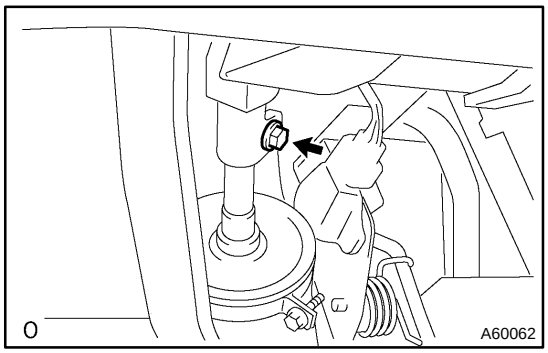

48. DISCONNECT STEERING INTERMEDIATE SHAFT ASSY

(a) Loosen the sliding yoke bolt.

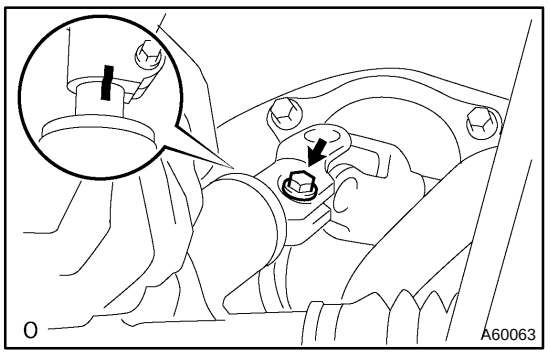

(b) Place matchmarks on the steering intermediate shaft and control valve shaft.

(c) Remove the bolt and disconnect the steering intermediate shaft.

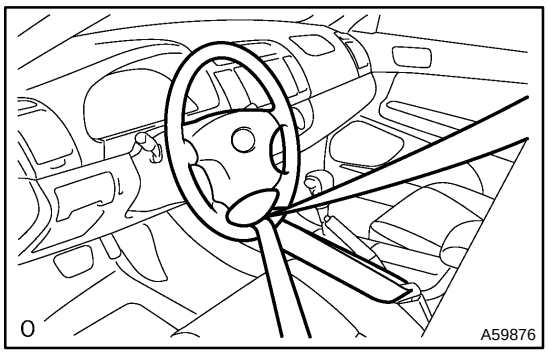

(d) To prevent the steering wheel from rotating, fix the wheel with the seat belt.

NOTICE:

If the steering wheel is not fixed, the spiral cable will be damaged.

49. REMOVE GENERATOR ASSY (See page 19−42)

50. REMOVE GENERATOR BRACKET NO.2

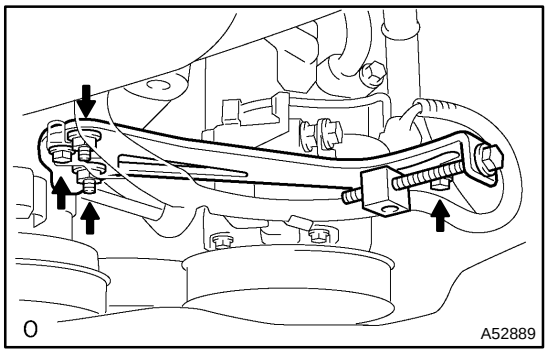

51. REMOVE GENERATOR BELT ADJUSTING BAR

(a) Remove the 2 bolts, 2 nuts and the adjusting bar.

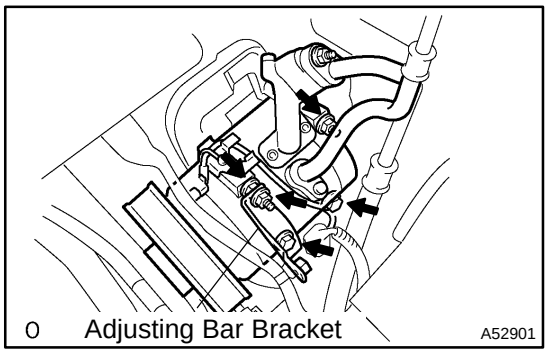

52. DISCONNECT COMPRESSOR AND MAGNETIC CLUTCH

(a) Remove the bolt, nut and adjusting bar bracket.

(b) Remove the 3 bolts and disconnect the compressor.

HINT:

Hang up the hoses instead of detaching them.

53. REMOVE ENGINE ASSEMBLY WITH TRANSAXLE

(a) Set the engine lifter.

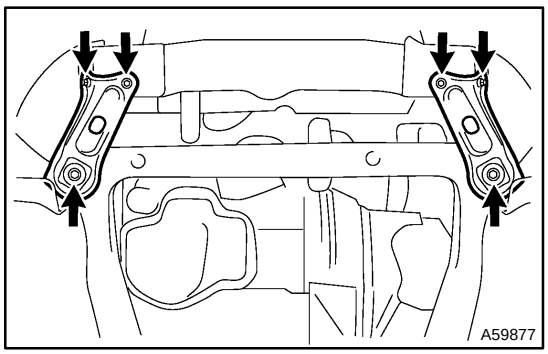

(b) Remove the 4 bolts, 2 nuts, and frame side rail plate sub−assembly RH and LH.

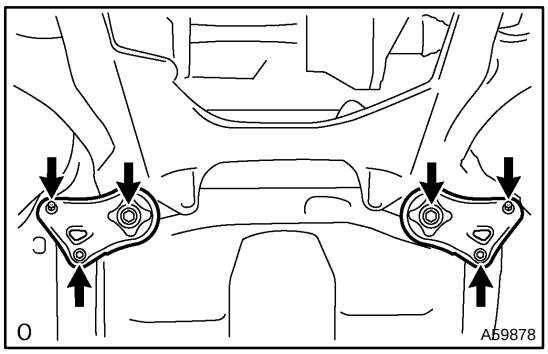

(c) Remove the 4 bolts, 2 nuts, and front suspension member brace rear RH and LH.
(d) Carefully, remove the engine assembly from the vehicle.

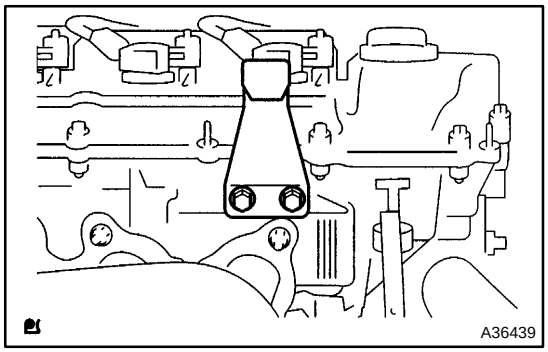

(e) Install the engine hanger as shown in the illustration.
No. 2 engine hanger: Part No. 12282−20020
Bolt: Part No. 91621−60822
Torque: 20 N·m (204 kgf·cm, 15 ft·lbf)
(f) Using a chain block and an engine sling device, hang the engine assembly.

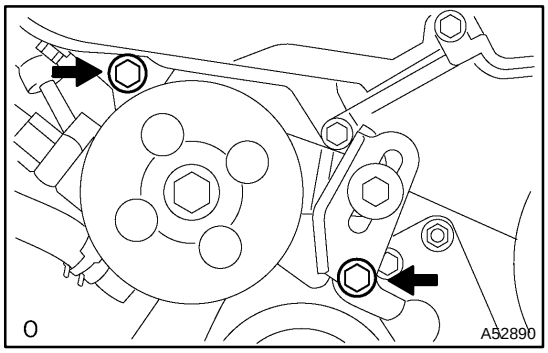

54. REMOVE VANE PUMP ASSY
(a) Remove the power steering oil pressure sensor harness.
(b) Remove the pressure feed tube clamp.
(c) Remove the 2 bolts and vane pump.

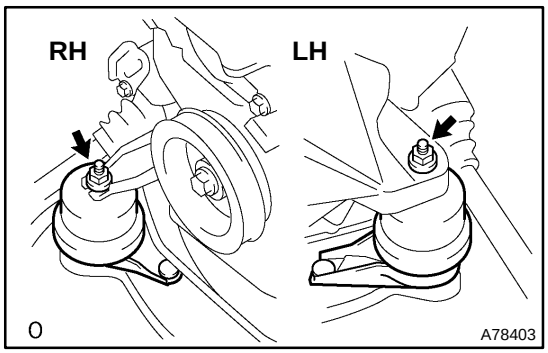

55. REMOVE FRONT FRAME ASSY
(a) Remove the 2 nuts and disconnect the engine mounting insulator RH and LH.

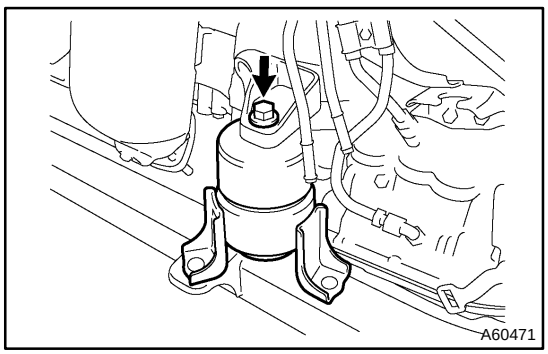

(b) Remove the bolt and disconnect the engine mounting insulator FR.

56. REMOVE FRONT DRIVE SHAFT ASSY LH (See page 30−8)
57. REMOVE FRONT DRIVE SHAFT ASSY RH (See page 30−8)
58. REMOVE ENGINE WIRE
59. REMOVE AUTOMATIC TRANSAXLE ASSY (See page 40−9)
60. REMOVE DRIVE PLATE & RING GEAR SUB−ASSY (See page 40−27)
61. INSTALL ENGINE STAND

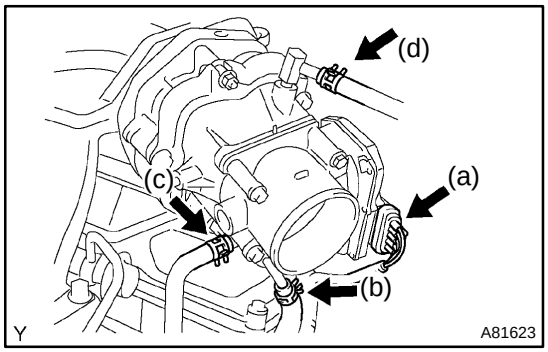

62. REMOVE INTAKE AIR SURGE TANK
(a) Disconnect the throttle motor connector.
(b) Disconnect the water bypass hose No. 3.
(c) Disconnect the water bypass hose No. 2.
(d) Disconnect the union to check valve hose.

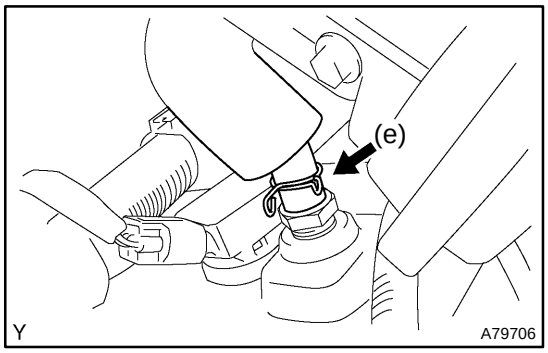

(e) Disconnect the ventilation hose.

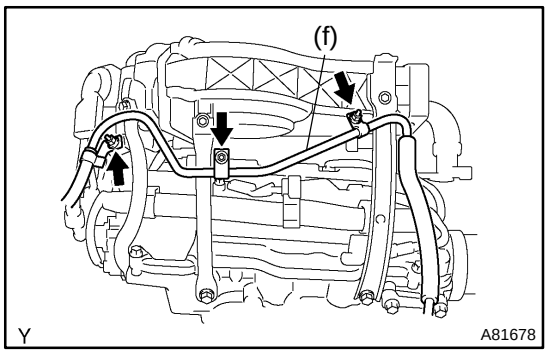

(f) Remove the 3 nuts and separate the pressure feed tube.

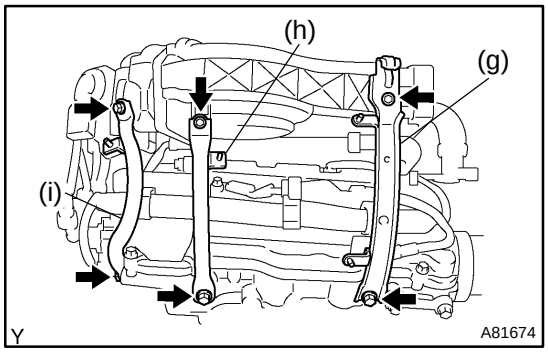

(g) Remove the 2 bolts and engine hunger No. 1.
(h) Remove the 2 bolts and surge tank stay No. 1.
(i) Remove the 2 bolts and surge tank stay No. 2.

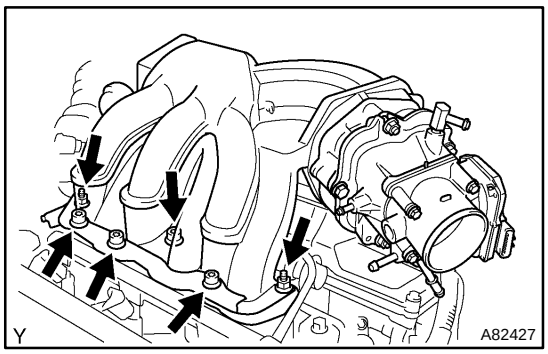

(j) Using a socket hexagon wrench 8, remove the 4 bolts.
(k) Remove the 2 nuts, emission control valve bracket and surge tank.
(l) Remove the gasket from the surge tank.

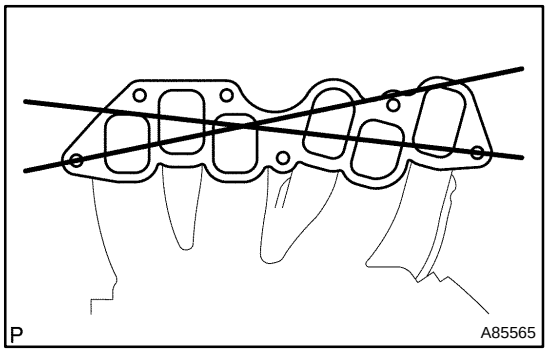

63. INSPECT INTAKE AIR SURGE TANK

(a) Using a precision straight edge and feeler gauge, measure the surface contacting the cylinder head for warpage.

Maximum warpage: 0.10 mm (0.0039 in.)

If the warpage is greater than the maximum, replace the manifold.

64. REMOVE IGNITION COIL ASSY

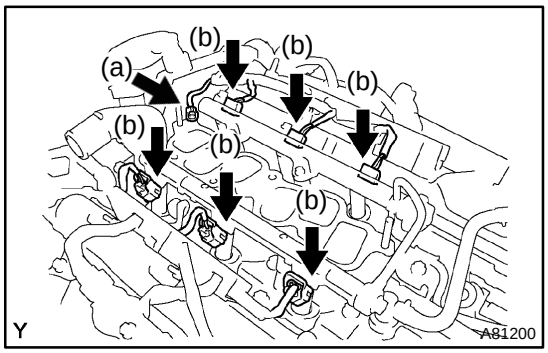

65. REMOVE INTAKE MANIFOLD

(a) Remove the nut and disconnect the ground cable.
(b) Disconnect the 6 fuel injector connectors.

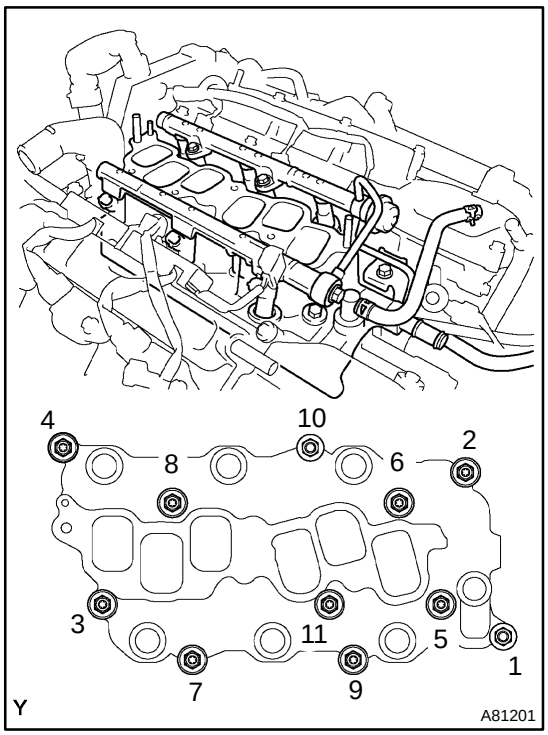

(c) Uniformly, loosen and remove the 9 bolts and 2 nuts in the sequence shown in the illustration. Remove the intake manifold.

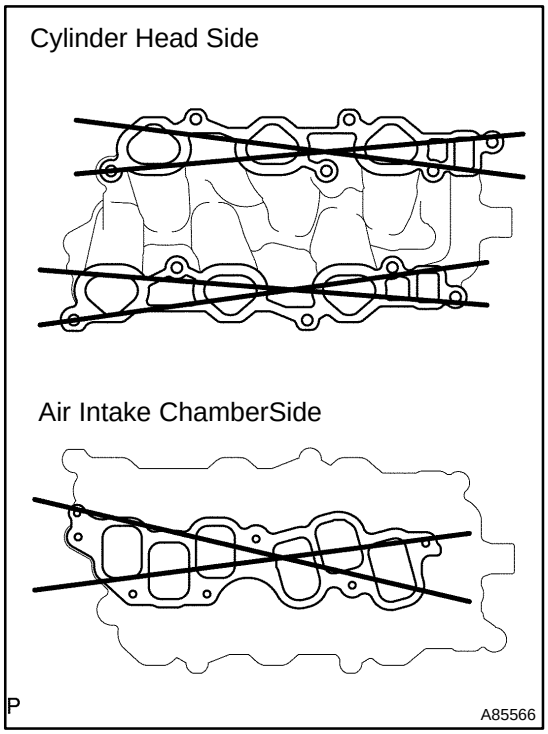

66. INSPECT INTAKE MANIFOLD

(a) Using a precision straight edge and feeler gauge, measure the surface contacting the cylinder head and air intake surge tank for warpage.

Maximum warpage:

Item	Specified Condition
Intake air surge tank side	0.15 mm (0.0059 in.)
Cylinder head side	0.08 mm (0.0031 in.)

If warpage is greater than the maximum, replace the manifold.

67. REMOVE WATER OUTLET (See page 14−239)

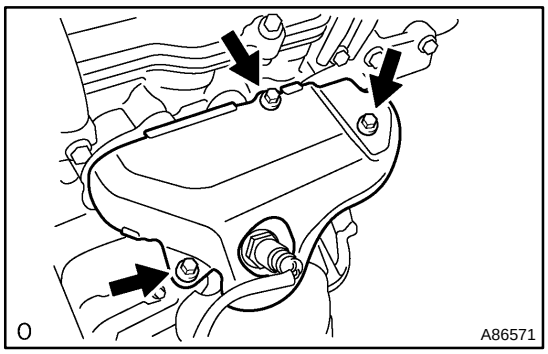

68. REMOVE EXHAUST MANIFOLD SUB−ASSY RH

(a) Disconnect the A/F sensor connector.

(b) Remove the 3 bolts and insulator.

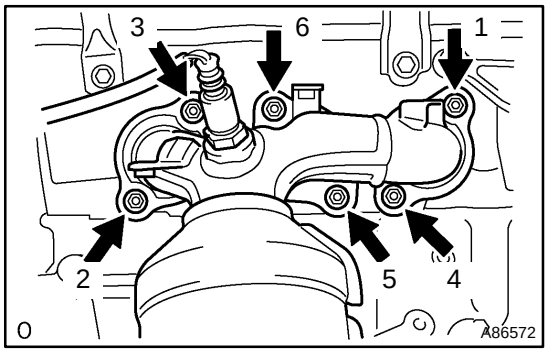

(c) Uniformly loosen and remove the 6 nuts in the sequence shown in the illustration.

(d) Remove the manifold and gasket.

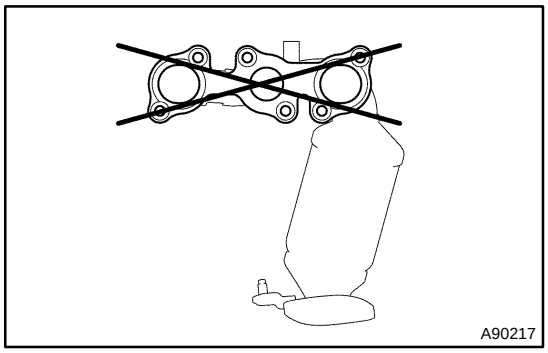

69. INSPECT EXHAUST MANIFOLD SUB−ASSY RH

(a) Using a precision straight edge and feeler gauge, measure the surface contacting the cylinder head for warpage.

Maximum warpage: 0.50 mm (0.0196 in.)

If the warpage is greater than the maximum, replace the manifold.

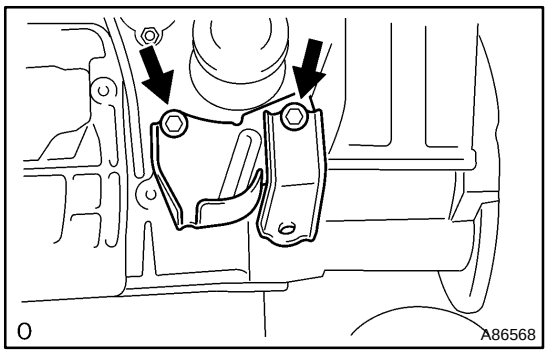

70. REMOVE MANIFOLD STAY NO.2

(a) Remove the 2 bolts and manifold stay.

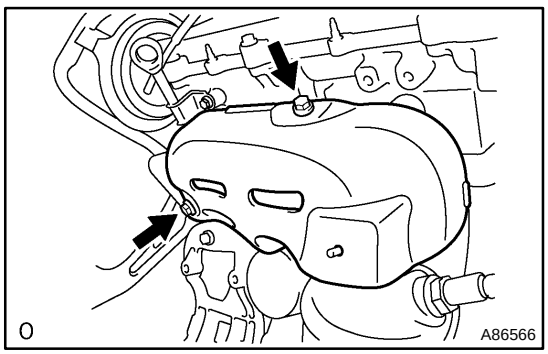

71. REMOVE EXHAUST MANIFOLD HEAT INSULATOR NO.2

(a) Remove the 2 bolts and insulator.

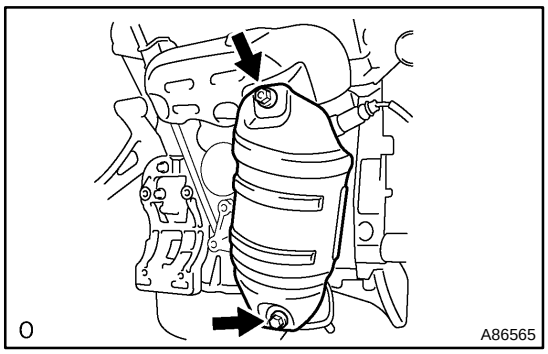

(b) Remove the bolt, nut and insulator.

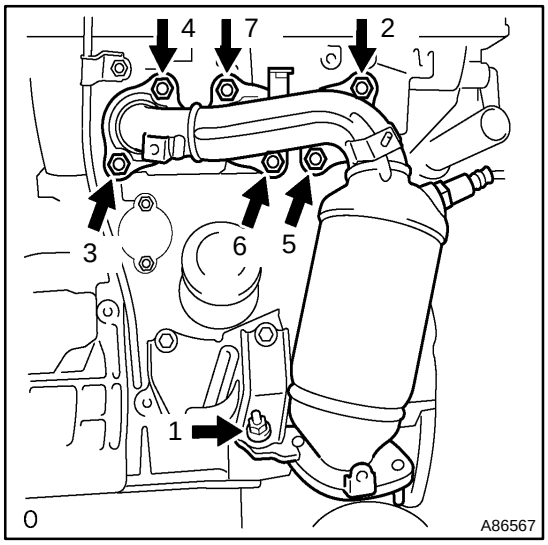

72. REMOVE EXHAUST MANIFOLD CONVERTER SUB−ASSY NO.2

(a) Uniformly loosen and remove the 7 nuts in the sequence shown in the illustration.

(b) Remove the converter and gasket.

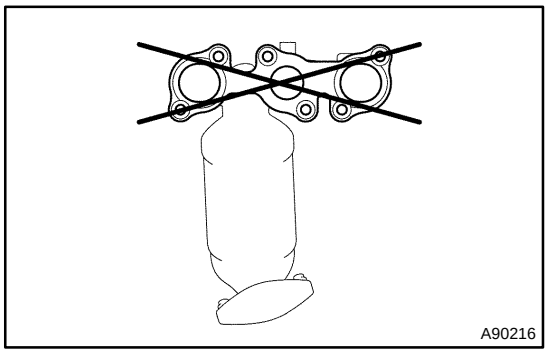

73. INSPECT EXHAUST MANIFOLD CONVERTER SUB−ASSY NO.2

(a) Using a precision straight edge and feeler gauge, measure the surface contacting the cylinder head for warpage.

Maximum warpage: 0.50 mm (0.0196 in.)

If the warpage is greater than the maximum, replace the manifold.

74. REMOVE DRIVE SHAFT BEARING BRACKET

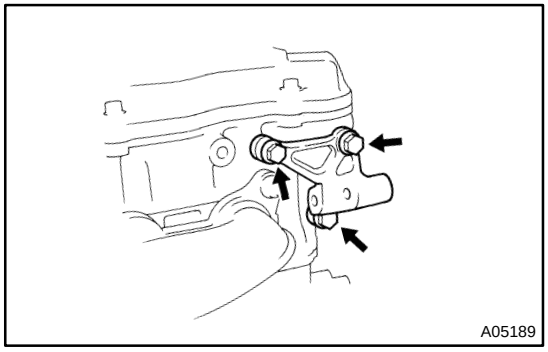

75. REMOVE PUMP BRACKET

(a) Remove the 3 bolts and pump bracket.

76. REMOVE GENERATOR BRACKET NO.1

77. REMOVE COMPRESSOR MOUNTING BRACKET NO.1

78. REMOVE WATER INLET PIPE

79. REMOVE WATER INLET

80. REMOVE THERMOSTAT

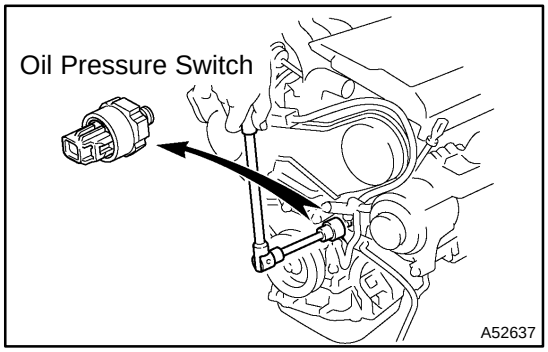

81. REMOVE ENGINE OIL PRESSURE SWITCH ASSY

(a) Remove the oil pressure switch.

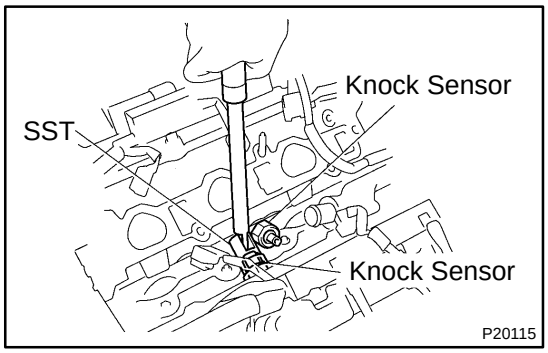

82. REMOVE KNOCK SENSOR

(a) 1MZ−FE:
Using SST, remove the 2 sensors.
SST 09816−30010

(b) 3MZ−FE:
Remove the 2 nuts and 2 sensors.

83. REPLACE PARTIAL ENGINE ASSY

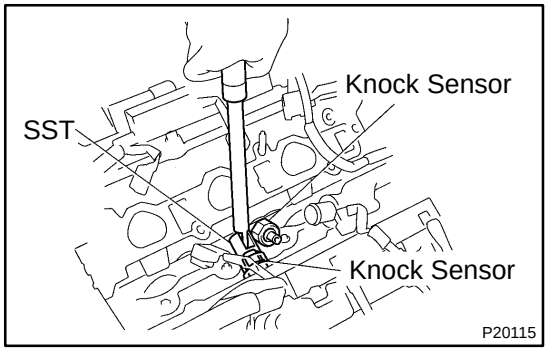

84. INSTALL KNOCK SENSOR

(a) 1MZ−FE:
Using SST, install the 2 knock control sensors.
SST 09816−30010
Torque: 39 N·m (398 kgf·cm, 29 ft·lbf)

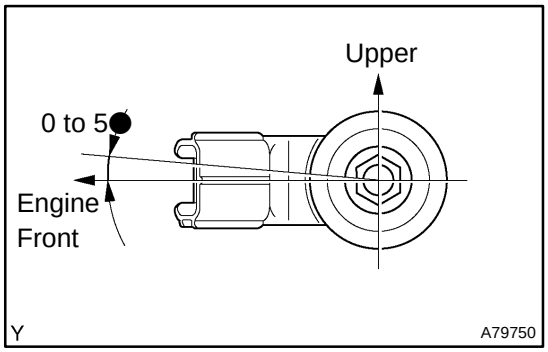

(b) 3MZ−FE:
Install the 2 knock sensors with the 2 nuts, as shown in the illustration.
Torque: 20 N·m (199 kgf·cm, 14 ft·lbf)

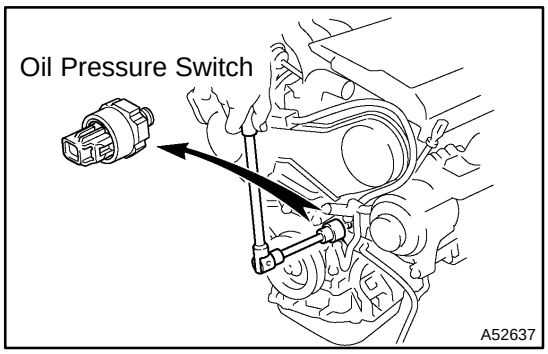

85. INSTALL ENGINE OIL PRESSURE SWITCH ASSY

(a) Clean the threads of the oil pressure switch. Apply adhesive to 2 or 3 threads of the oil pressure switch.
Adhesive:
Part No. 08833−00080 THREE BOND 1344, LOCTITE 242 or equivalent

(b) Install the oil pressure switch.
Torque: 15 N·m (152 kgf·cm, 11 ft·lbf)

86. INSTALL THERMOSTAT (See page 16−32)
87. INSTALL WATER INLET (See page 16−32)
88. INSTALL WATER INLET PIPE (See page 16−32)
89. INSTALL COMPRESSOR MOUNTING BRACKET NO.1
Torque: 25 N·m (255 kgf·cm, 18 ft·lbf)
90. INSTALL GENERATOR BRACKET NO.1
Torque: 58 N·m (591 kgf·cm, 43 ft·lbf)

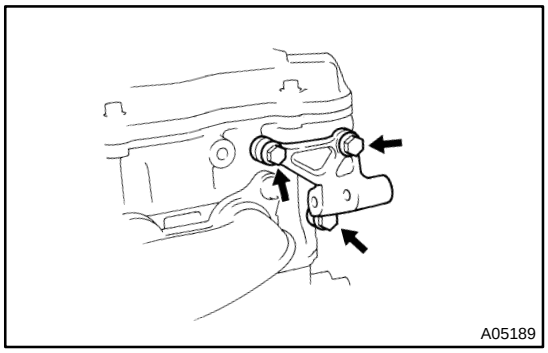

91. INSTALL PUMP BRACKET
Torque: 32 N·m (326 kgf·cm, 24 ft·lbf)

92. INSTALL DRIVE SHAFT BEARING BRACKET
Torque: 64 N·m (653 kgf·cm, 47 ft·lbf)

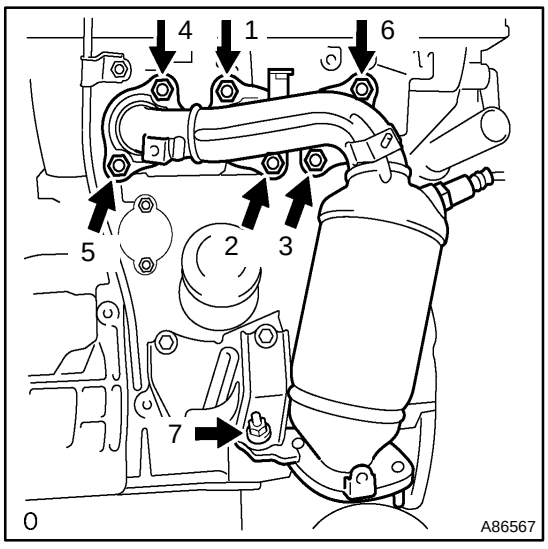

93. INSTALL EXHAUST MANIFOLD CONVERTER SUB−ASSY NO.2

(a) Install a new gasket and the converter sub−assy No. 2 with the 7 nuts. Uniformly, tighten the 7 nuts in the sequence shown in the illustration.
Torque: 49 N·m (500 kgf·cm, 36 ft·lbf)

(b) Retighten nuts 1 and 2 as shown in the illustration.

94. INSTALL EXHAUST MANIFOLD HEAT INSULATOR NO.2
Torque: 8.5 N·m (87 kgf·cm, 55 in.·lbf)

95. INSTALL MANIFOLD STAY NO.2
Torque: 34 N·m (347 kgf·cm, 25 ft·lbf)

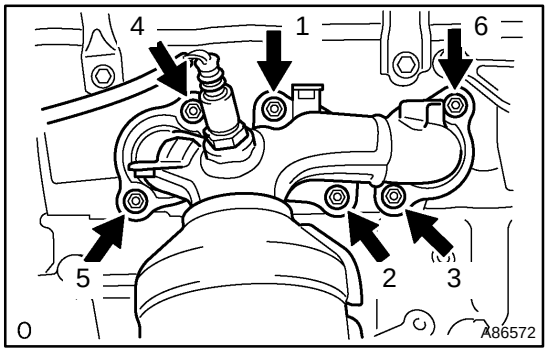

96. INSTALL EXHAUST MANIFOLD SUB−ASSY RH
(a) Install a new gasket and the exhaust manifold RH. Uniformly tighten the 5 nuts in the sequence shown in the illustration.
Torque: 49 N·m (500 kgf·cm, 36 ft·lbf)
(b) Retighten nuts 1 and 2 shown in the illustration.

97. INSTALL WATER OUTLET (See page 14−239)

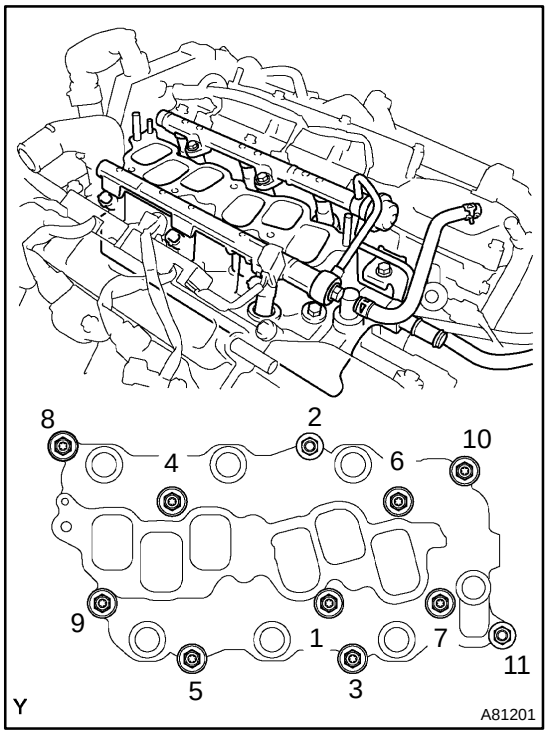

98. INSTALL INTAKE MANIFOLD
(a) Install the intake manifold with the 9 bolts, 2 nuts and 2 washers. Uniformly tighten the bolts and nuts in the sequence shown in the illustration.
Torque: 15 N·m (153 kgf·cm, 11 ft·lbf)
(b) Retighten the water outlet mounting bolts and nuts.
Torque: 15 N·m (153 kgf·cm, 11 ft·lbf)
(c) Install the ground cable with the nut.
Torque: 8.4 N·m (86 kgf·cm, 74 in.·lbf)
(d) Connect the heater inlet water hose.

99. INSTALL IGNITION COIL ASSY
Torque: 8.0 N·m (82 kgf·cm, 71 in.·lbf)

100. INSTALL INTAKE AIR SURGE TANK
(a) Install a new gasket to the intake air surge tank.
(b) Install the intake air surge tank and emission control valve bracket with the 2 nuts.
Torque: 28 N·m (286 kgf·cm, 21 ft·lbf)
(c) Using a socket hexagon wrench 8, tighten the 4 bolts.
Torque: 28 N·m (286 kgf·cm, 21 ft·lbf)
(d) Install the surge tank stay No. 2 with the 2 bolts.
Torque: 20 N·m (199 kgf·cm, 15 ft·lbf)

(e) Install the surge tank stay No. 1 with the 2 bolts.
Torque: 20 N·m (199 kgf·cm, 15 ft·lbf)
(f) Install the engine hunger No. 1 with the 2 bolts.
Torque: 20 N·m (199 kgf·cm, 15 ft·lbf)
(g) Install the pressure feed tube with the 3 nuts.
Torque: 7.8 N·m (80 kgf·cm, 69 in.·lbf)
(h) Connect the ventilation hose.
(i) Connect the union to check valve hose.
(j) Connect the water bypass hose No. 2.
(k) Connect the water bypass hose No. 3.
(l) Connect the throttle motor connector.

101. INSTALL DRIVE PLATE & RING GEAR SUB−ASSY (See page 40−27)
102. INSTALL AUTOMATIC TRANSAXLE ASSY (See page 40−9)
103. INSTALL FRONT DRIVE SHAFT ASSY RH (See page 30−8)
104. INSTALL FRONT DRIVE SHAFT ASSY LH (See page 30−8)

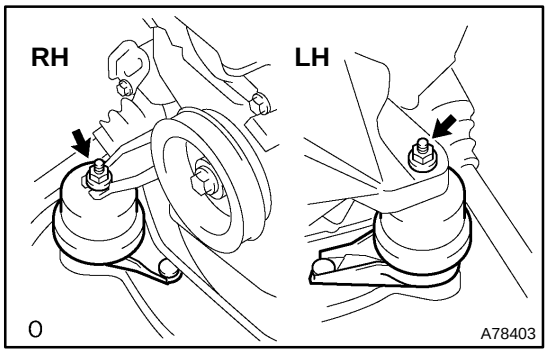

105. INSTALL FRONT FRAME ASSY
(a) Install the engine mounting insulator RH and LH with the 2 nuts.
Torque: 95 N·m (969 kgf·cm, 70 ft·lbf)

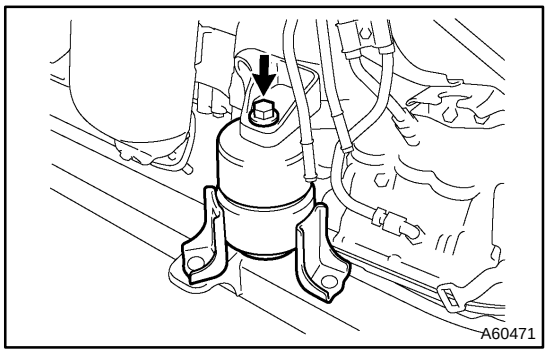

(b) Install the engine mounting insulator FR with the bolt.
Torque: 87 N·m (887 kgf·cm, 64 ft·lbf)

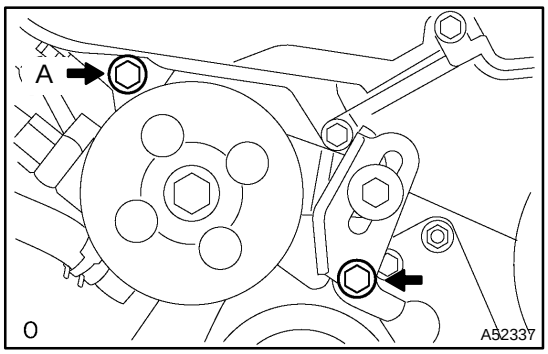

106. INSTALL VANE PUMP ASSY
(a) Install the vane pump with the 2 bolts.
Torque: 43 N·m (439 kgf·cm, 32 ft·lbf)
HINT:
After adjusting the V−ribbed belt, tighten bolt A.

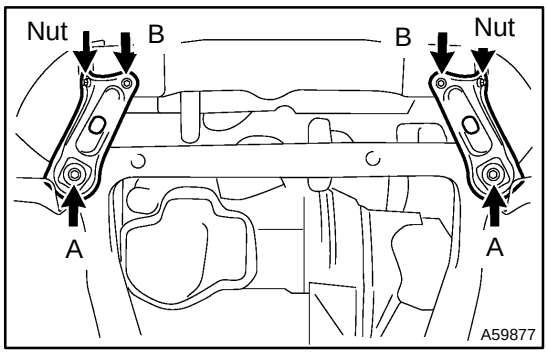

107. INSTALL ENGINE ASSEMBLY WITH TRANSAXLE

(a) Set the engine assembly with transaxle on the engine lifter.

(b) Install the engine assembly to the vehicle.

(c) Install the frame side rail plate RH and LH with the 4 bolts and 2 nuts.

Torque:
85 N·m (867 kgf·cm, 63 ft·lbf) for bolt A
32 N·m (326 kgf·cm, 24 ft·lbf) for bolt B and nut

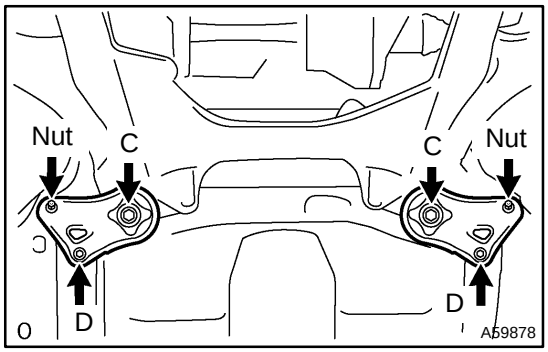

(d) Install the front suspension member brace rear RH and LH with the 4 bolts and 2 nuts.

Torque:
85 N·m (867 kgf·cm, 63 ft·lbf) for bolt C
32N·m (326 kgf·cm, 24 ft·lbf) for bolt D and nut

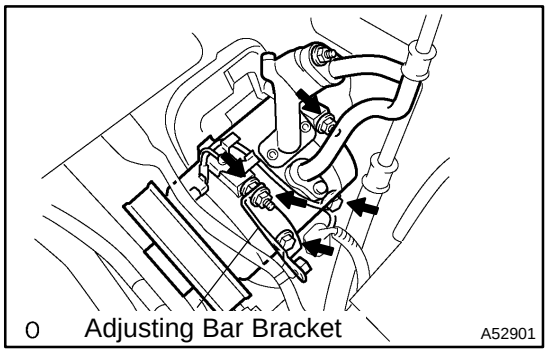

108. INSTALL COMPRESSOR AND MAGNETIC CLUTCH

(a) Install the compressor with the 3 bolts.

Torque: 25 N·m (250 kgf·cm, 18 ft·lbf)

(b) Install the adjusting bar bracket with the bolt and nut.

Torque:
25 N·m (250 kgf·cm, 18 ft·lbf) for bolt
26 N·m (260 kgf·cm, 19 ft·lbf) for nut

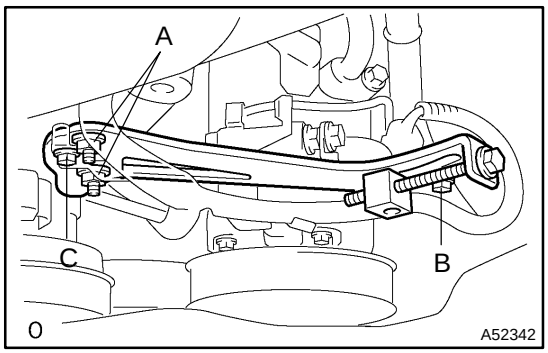

109. INSTALL GENERATOR BELT ADJUSTING BAR

(a) Install the adjusting bar with the 2 bolts and 2 nuts.

Torque:
43 N·m (438 kgf·cm, 32 ft·lbf) for nut A
18 N·m (184 kgf·cm, 13 ft·lbf) for bolt B
8.0 N·m (82 kgf·cm, 71 in.·lbf) for bolt C

110. INSTALL GENERATOR BRACKET NO.2
Torque: 28 N·m (286 kgf·cm, 21 ft·lbf)

111. INSTALL GENERATOR ASSY (See page 19−42)

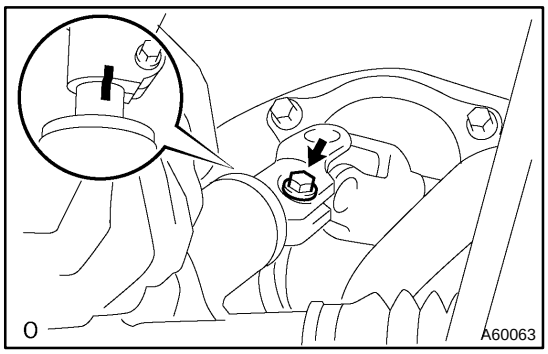

112. INSTALL STEERING INTERMEDIATE SHAFT ASSY

(a) Align the matchmarks on the intermediate shaft and control valve shaft, and install the bolt.
Torque: 35 N·m (357 kgf·cm, 26 ft·lbf)

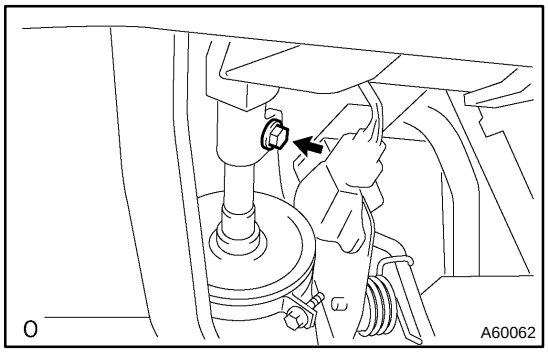

(b) Tighten the sliding yoke bolt.
Torque: 35 N·m (357 kgf·cm, 26 ft·lbf)

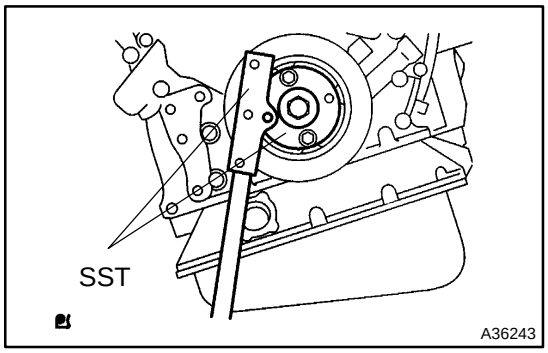

113. INSTALL DRIVE PLATE & TORQUE CONVERTER CLUTCH SETTING BOLT

(a) Using SST, hold the crankshaft.
SST 09213−54015 (91651−60855), 09330−00021

(b) Using kerosene or gasoline, clean the bolts thoroughly.

(c) Apply adhesive to 2 or 3 threads of the bolt end.
Adhesive:
Part No. 08833−00070, THREE BOND 1324 or equivalent

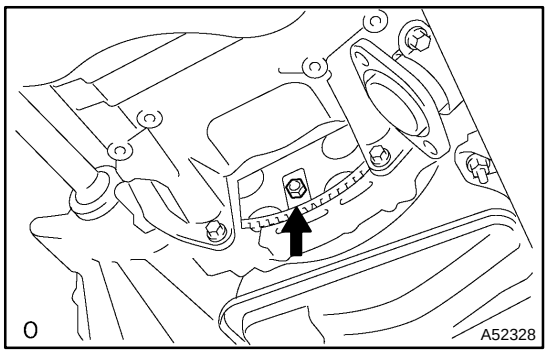

(d) Install the 6 torque converter set bolts.
Torque: 41 N·m (418 kgf·cm, 30 ft·lbf)

NOTICE:
First tighten the green colored bolt and then tighten the 5 bolts.

(e) Install the flywheel housing under cover with the 2 bolts.
Torque: 7.8 N·m (80 kgf·cm, 69 in.·lbf)

114. INSTALL EXHAUST PIPE SUPPORT BRACKET NO.1
Torque: 21 N·m (214 kgf·cm, 15 ft·lbf)

115. INSTALL STARTER ASSY (See page 19−29)

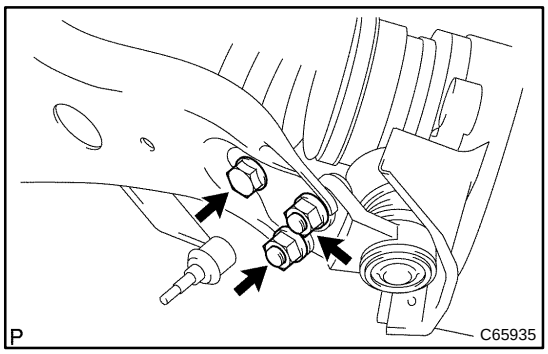

116. INSTALL FRONT SUSPENSION ARM SUB−ASSY LOWER NO.1 LH

(a) Install the drive shaft to the steering knuckle.

(b) Install the suspension lower arm with the bolt and 2 nuts.
Torque: 75 N·m (764 kgf·cm, 55 ft·lbf)

117. INSTALL FRONT SUSPENSION ARM SUB−ASSY LOWER NO.1 RH

HINT:

Use the same procedures described for the LH side.

118. INSTALL TIE ROD ASSY LH

(a) Connect the tie rod end to the steering knuckle and install a new castle nut.
Torque: 49 N·m (500 kgf·cm, 36 ft·lbf)

NOTICE:

- **Prevent any lubricant from contacting the thread and the taper portions.**
- **After tightening the castle nut, tighten it to the additional direction within 60● to put into a cotter pin.**

(b) Insert a new cotter pin.

119. INSTALL TIE ROD ASSY RH

HINT:

Use the same procedures described for the LH side.

120. INSTALL SPEED SENSOR FRONT LH (See page 32−66)

121. INSTALL SPEED SENSOR FRONT RH

HINT:

Use the same procedures described for the LH side.

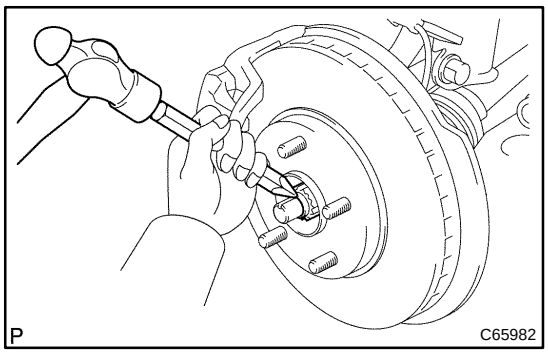

122. INSTALL FRONT AXLE HUB LH NUT

(a) Using a 30 mm socket wrench, install a new hub nut.
Torque: 294 N·m (2,998 kgf·cm, 217 ft·lbf)

(b) Using a chisel and hammer, tapped the front axle hub LH nut.

123. INSTALL FRONT AXLE HUB RH NUT

HINT:

Use the same procedures described for the LH side.

124. INSTALL FRONT STABILIZER LINK ASSY LH

(a) Using a 6 mm socket hexagon wrench, hold the ball stud, and install the nut.
Torque: 74 N·m (755 kgf·cm, 55 ft·lbf)

125. INSTALL FRONT STABILIZER LINK ASSY RH

HINT:

Use the same procedures described for the LH side.

126. INSTALL EXHAUST PIPE ASSY FRONT (See page 15−7)

127. INSTALL EXHAUST PIPE NO.1 SUPPORT BRACKET (See page 15−7)

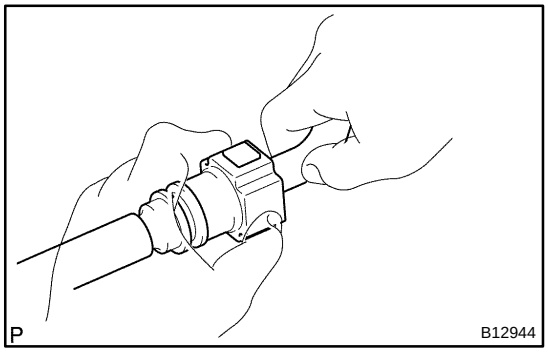

128. CONNECT FUEL PIPE SUB−ASSY NO.1

(a) Push in the fuel tube connector to the fuel pipe until connector makes a ”click” sound.

NOTICE:

- **Check for damage or contamination on the connected part of the pipe.**
- **After having finished the connection, check if the pipe and the connector are securely connected by trying to pull them apart.**

(b) Install the fuel pipe clamp.

129. INSTALL AIR CLEANER ASSEMBLY WITH HOSE

130. CONNECT VACUUM HOSES

Vacuum Hose Routing Diagram (1MZ−FE)

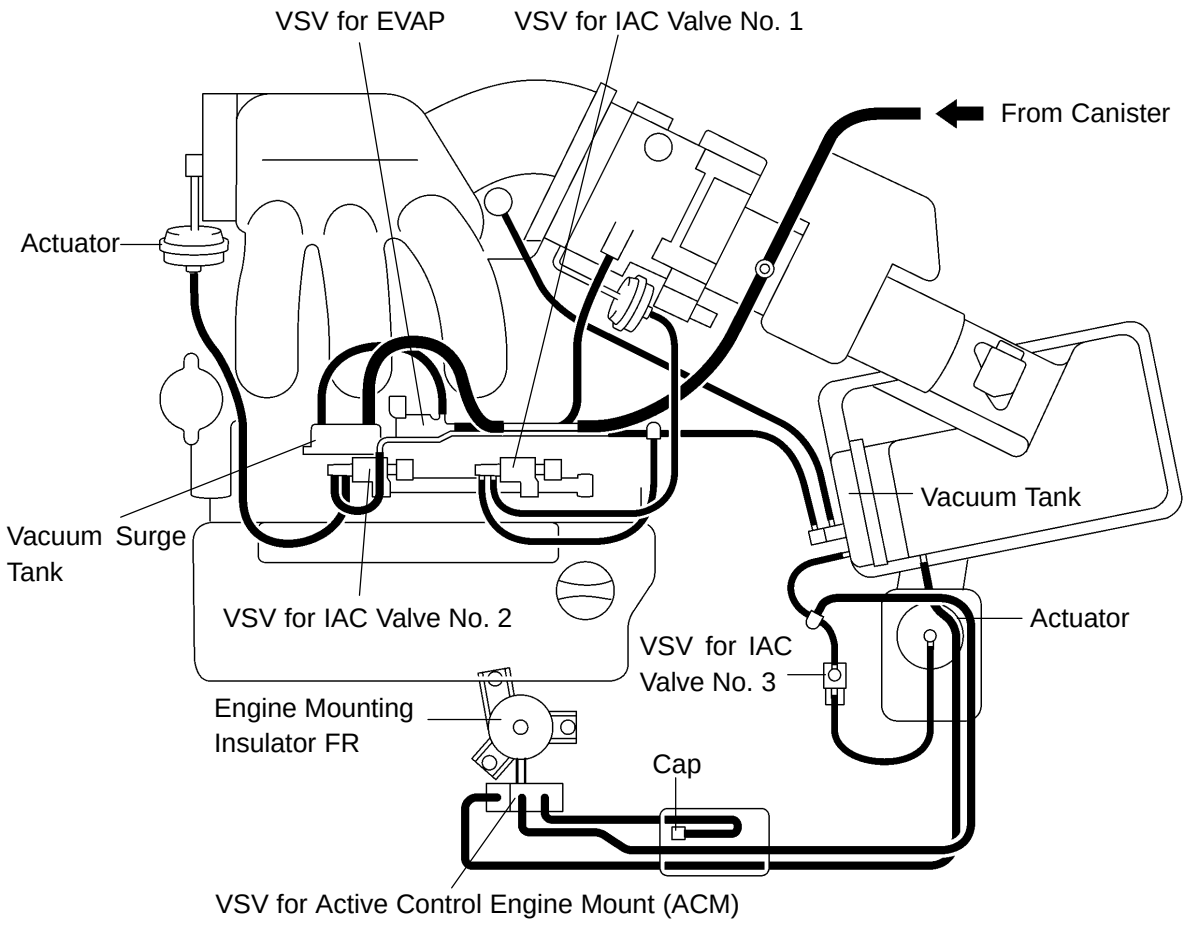

Vacuum Hose Routing Diagram (3MZ−FE)

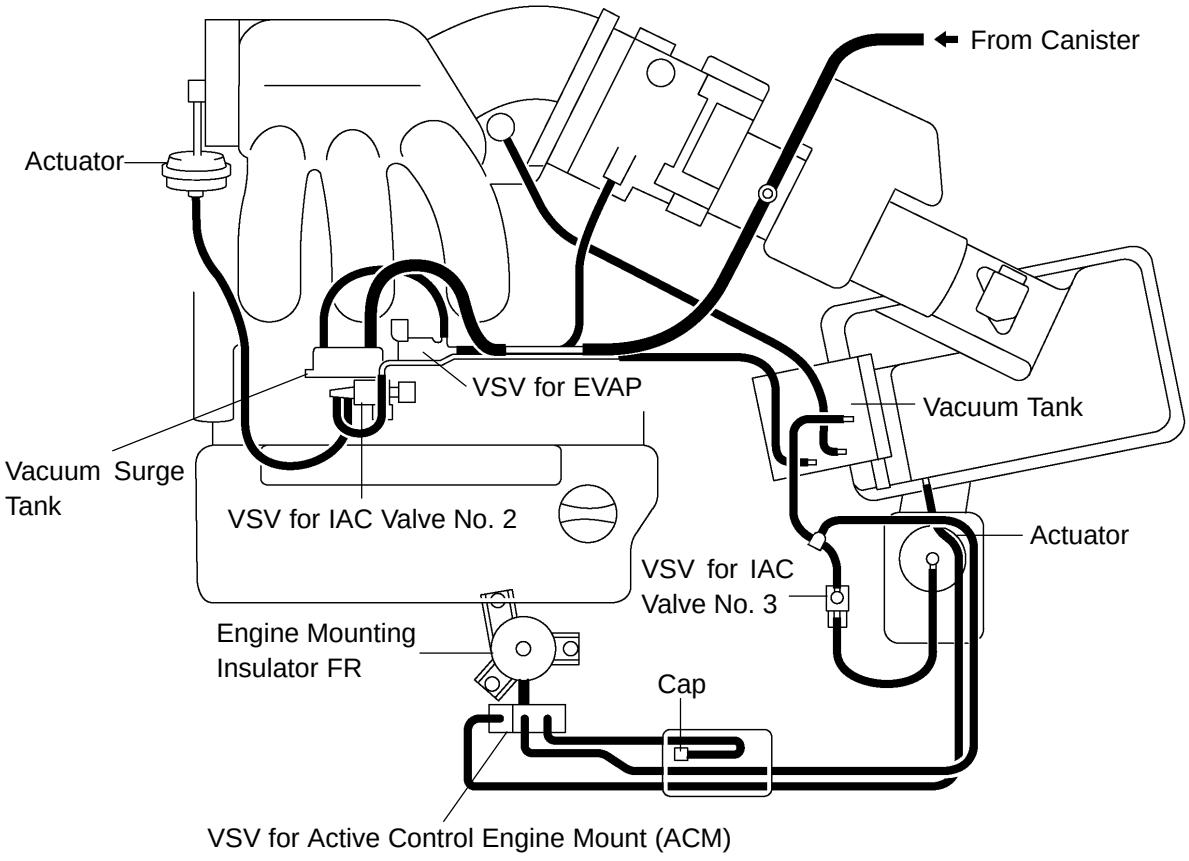

131. INSTALL V−BANK COVER SUB−ASSY

(a) Using a 5 mm socket hexagon wrench, install the V−bank cover with the 2 nuts.
Torque: 7.9 N·m (81 kgf·cm, 70 in.·lbf)

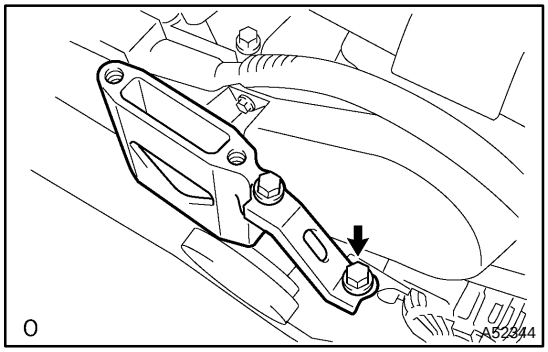

132. INSTALL ENGINE MOUNTING STAY NO.2 RH

(a) Install the mounting stay and mounting bracket with the bolt.
Torque: 64 N·m (653 kgf·cm, 47 ft·lbf)

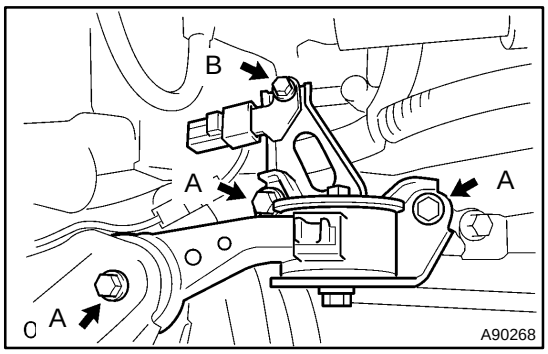

133. INSTALL ENGINE MOVING CONTROL ROD

(a) Install the control rod and bracket with the 4 bolts.

Torque:
64 N·m (653 kgf·cm, 47 ft·lbf) for bolt A
23 N·m (235 kgf·cm, 17 ft·lbf) for bolt B

134. INSTALL VANE PUMP V BELT (See page 51−17)
135. INSTALL V (COOLER COMPRESSOR TO CRANKSHAFT PULLEY) BELT NO.1 (See page 14−140)
136. INSPECT DRIVE BELT TENSION (See page 14−136)
137. INSTALL FRONT WHEELS
138. ADD AUTOMATIC TRANSAXLE FLUID (See page 40−2)
139. ADD ENGINE OIL
140. ADD ENGINE COOLANT (See page 16−27)
141. ADD POWER STEERING FLUID
142. BLEED POWER STEERING FLUID (See page 51−3)
143. CHECK FOR OIL LEAKS
144. CHECK FOR ENGINE COOLANT LEAKS (See page 16−21)
145. INSPECT FOR FUEL LEAKS
146. CHECK FOR EXHAUST GAS LEAKS
147. INSPECT AND ADJUST FRONT WHEEL ALIGNMENT (See page 26−5)
148. INSPECT IGNITION TIMING (See page 14−136)
149. INSPECT ENGINE IDLE SPEED (See page 14−136)
150. INSPECT CO/HC (See page 14−136)
151. CHECK ABS SPEED SENSOR SIGNAL (See page 05−990)

141IV−03

OVERHAUL

1. REMOVE SPARK PLUG
2. REMOVE OIL FILLER CAP SUB−ASSY
3. REMOVE OIL FILLER CAP GASKET
4. REMOVE CYLINDER HEAD COVER SUB−ASSY LH
5. REMOVE CYLINDER HEAD COVER GASKET NO.2
6. REMOVE CYLINDER HEAD COVER SUB−ASSY
7. REMOVE CYLINDER HEAD COVER GASKET
8. REMOVE VENTILATION VALVE SUB−ASSY
9. REMOVE CAMSHAFT TIMING OIL CONTROL VALVE ASSY
10. REMOVE VVT SENSOR
(a) Remove the sensor.
(b) Remove the O−ring from the sensor.
11. REMOVE OIL LEVEL GAGE SUB−ASSY
12. REMOVE OIL LEVEL GAGE GUIDE

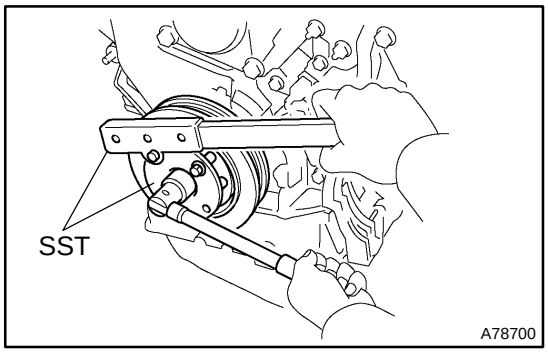

13. REMOVE CRANKSHAFT PULLEY
(a) Using SST, loosen the pulley bolt.
SST 09213−54015 (91651−60855), 09330−00021

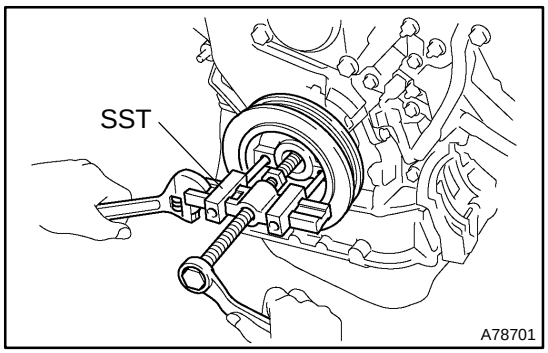

(b) Using SST and the pulley bolt, remove the pulley.
SST 09950−50013 (09951−05010, 09952−05010, 09953−05020, 09954−05031)

NOTICE:
Before using SST, apply lubricating oil on the threads and tip of the center bolt 150.

14. REMOVE TIMING BELT NO.1 COVER
15. REMOVE TIMING BELT NO.2 COVER
16. REMOVE ENGINE MOUNTING BRACKET RH
17. REMOVE TIMING BELT GUIDE NO.2

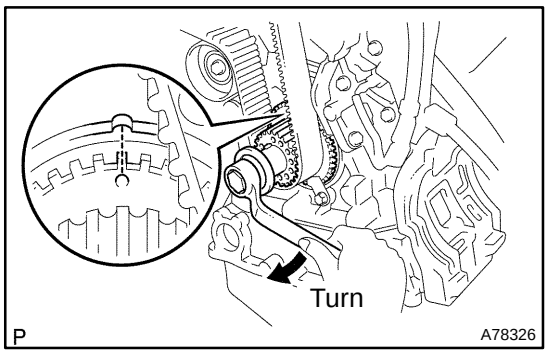

18. REMOVE TIMING BELT

(a) Set the No. 1 cylinder to TDC/compression.

(1) Temporarily install the crankshaft pulley bolt and washer to the crankshaft.

(2) Turn the crankshaft clockwise, and align the timing mark of the crankshaft timing pulley with the oil pump body.

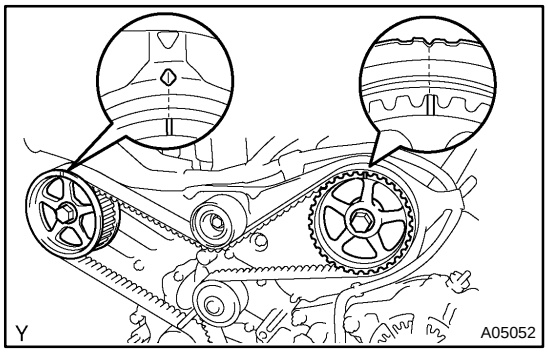

(3) Check that timing marks of the camshaft timing pulleys and No. 3 timing belt cover are aligned.

If not, turn the crankshaft 1 revolution (360).

(4) Remove the crankshaft pulley bolt.

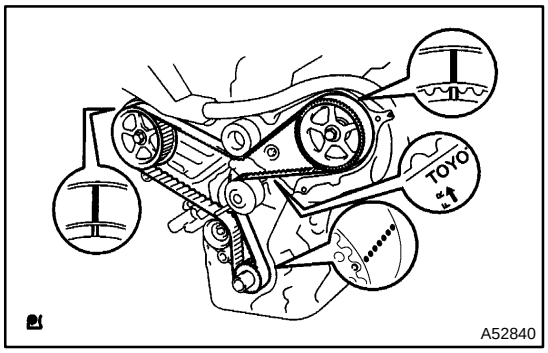

(b) If reusing the timing belt, check that there are 4 installation marks on the timing belt as shown in the illustration.

(1) If the installation marks have disappeared, put new installation marks on the timing belt before removing.

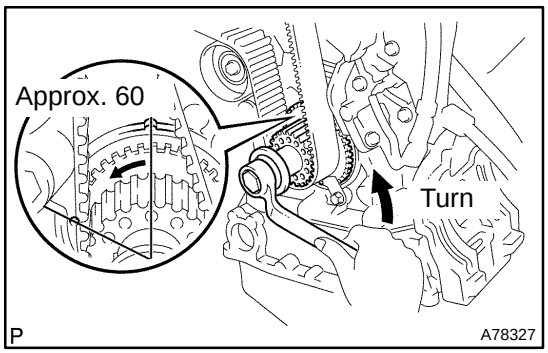

(c) Set the No. 1 cylinder to approximately 60 BTDC/ compression.

(1) Turn the crankshaft counterclockwise by approximately 60 .

NOTICE:

With timing belt removed:

The crankshaft pulley must be at the correct angle to avoid damage in later steps. If the crankshaft pulley is at the wrong angle and the camshaft timing pulley and the camshaft are removed, the piston head and valve head may come in contact and damaged.

(d) Remove the timing belt tensioner.

NOTICE:

Do not reinstall the tensioner with its plunger extended.

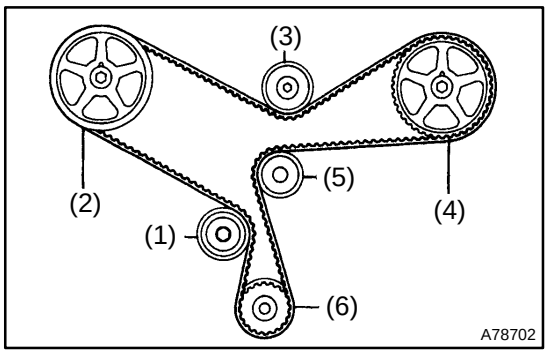

(e) Remove the timing belt in this order.

1st	No. 1 idler pulley
2nd	RH camshaft timing pulley
3rd	No. 2 idler pulley
4th	LH camshaft timing pulley
5th	Water pump pulley
6th	Crankshaft timing pulley

19. REMOVE TIMING BELT IDLER SUB−ASSY NO.1

(a) Using a socket hexagon wrench 10, remove the pivot bolt, timing belt idler No. 1 and plate washer.

20. REMOVE TIMING BELT IDLER SUB−ASSY NO.2

21. REMOVE CRANKSHAFT POSITION SENSOR

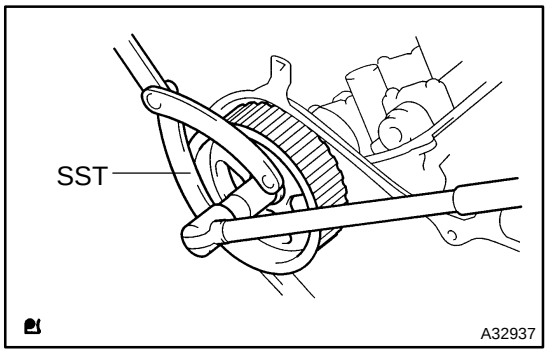

22. REMOVE CAMSHAFT TIMING PULLEY

(a) Using SST, remove the bolt and RH timing pulley.
SST 09960−10010 (09962−01000, 09963−01000)

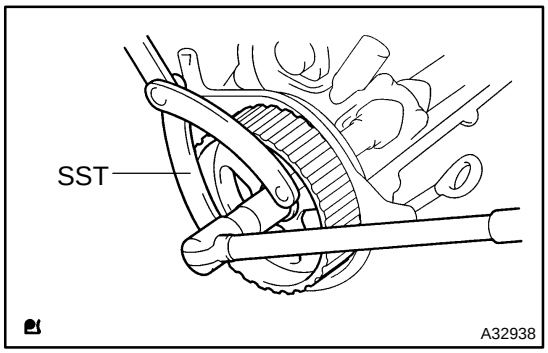

(b) Using SST, remove the bolt and LH timing pulley.
SST 09960−10010 (09962−01000, 09963−01000)

HINT:
Arrange the camshaft timing pulleys (RH and LH sides) so that they can be returned to the original locations when reassembling.

23. REMOVE TIMING BELT NO.3 COVER

24. REMOVE TIMING BELT IDLER BRACKET

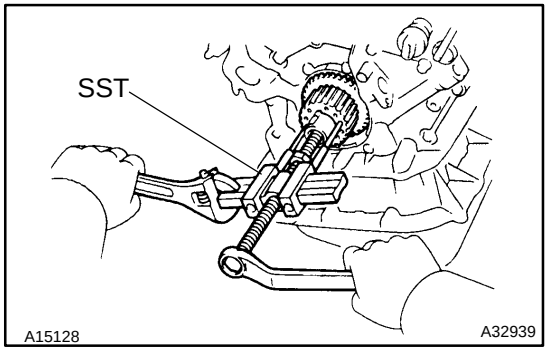

25. REMOVE CRANKSHAFT TIMING PULLEY

(a) Remove the bolt and the timing belt plate.

(b) Install the pulley bolt to the crankshaft.

(c) Using SST, remove the crankshaft timing pulley.
SST 09950−50013 (09951−05010, 09952−05010, 09953−05020, 09954−05011)

NOTICE:

- **Do not scratch the sensor part of the crankshaft timing pulley.**

- **Before using SST, apply lubricating oil on the threads and tip of the center bolt 150.**

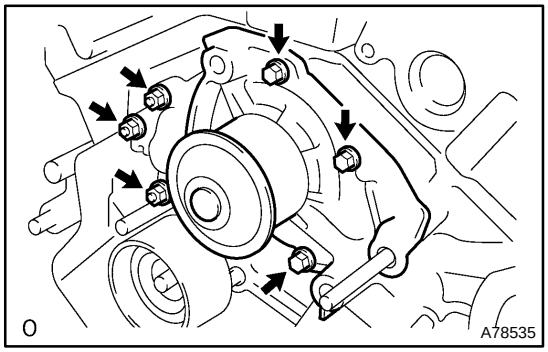

26. REMOVE WATER PUMP ASSY

(a) Remove the 3 bolts and 3 nuts, then remove the water pump and the gasket.

27. REMOVE CAMSHAFT

NOTICE:

Since the thrust clearance of the camshaft is small, the camshaft must be kept level while it is being removed. If the camshaft is not kept level, damage to the cylinder head or to the camshaft may result. To avoid this, the following steps should be carried out.

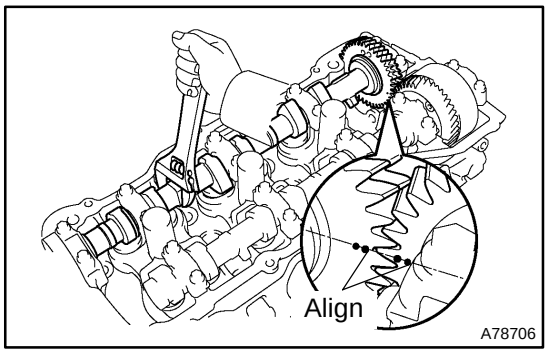

(a) Align the camshaft drive and driven gear's timing marks (2 dot marks each) by turning the camshaft with a wrench.

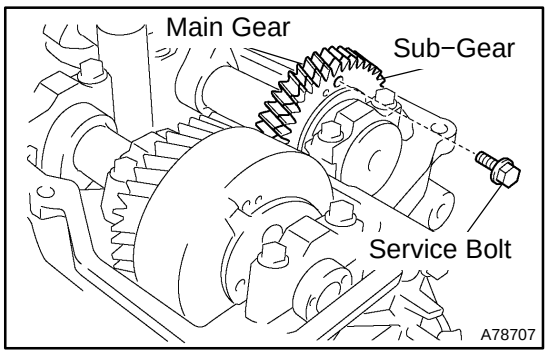

(b) Secure the exhaust camshaft sub−gear to the main gear with a service bolt.

Recommended service bolt:

Item	Specified Condition
Thread diameter	6 mm
Thread pitch	1 mm
Bolt length	16 to 20 mm

Torque: 5.4 N·m (55 kgf·cm, 48 in.·lbf)

HINT:

When removing the camshaft, make certain that the torsional spring force of the sub gear has been eliminated by installation of the service bolt.

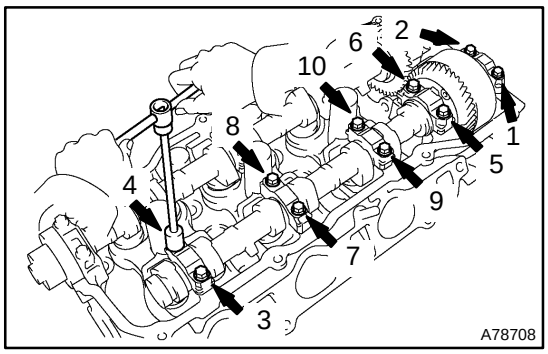

(c) Uniformly loosen and remove the 10 bearing cap bolts in the sequence shown in the illustration. Remove the 5 bearing caps and the camshaft.

NOTICE:

- **Do not pry out the camshaft.**
- **Be careful not to damage the portion of the cylinder head receiving the shaft thrust.**

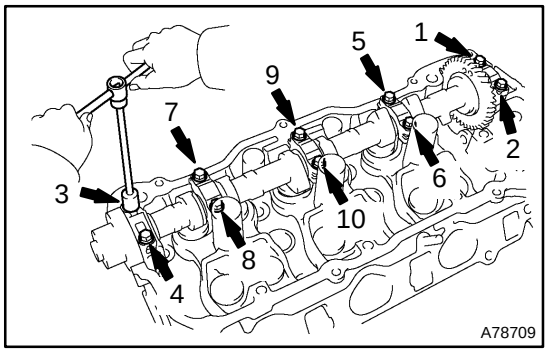

28. REMOVE NO.2 CAMSHAFT

(a) Uniformly loosen and remove the 10 bearing cap bolts in the sequence shown in the illustration. Remove the 5 bearing caps and the No. 2 camshaft.

NOTICE:

- **Do not pry out the camshaft.**
- **Be careful not to damage the portion of the cylinder head receiving the shaft thrust.**

(b) Remove the oil seal from the No. 2 camshaft.

29. REMOVE NO.3 CAMSHAFT SUB−ASSY

NOTICE:

Since the thrust clearance of the camshaft is small, the camshaft must be kept level while it is being removed. If the camshaft is not kept level, damage to the cylinder head or to the camshaft may result. To avoid this, the following steps should be carried out.

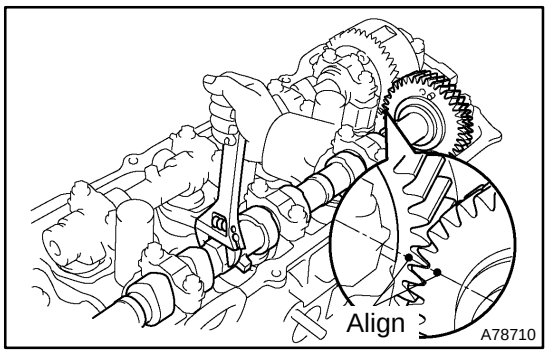

(a) Align the camshaft drive and driven gear's timing marks (1 dot mark each) by turning the camshaft with a wrench.

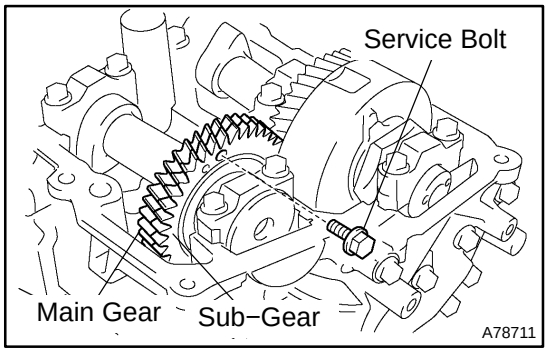

(b) Secure the exhaust camshaft sub−gear to the main gear with a service bolt.

Recommended service bolt:

Thread diameter	6 mm
Thread pitch	1 mm
Bolt length	16 to 20 mm

Torque: 5.4 N·m (55 kgf·cm, 48 in.·lbf)

HINT:
When removing the camshaft, make certain that the torsional spring force of the sub gear has been eliminated by installation of the service bolt.

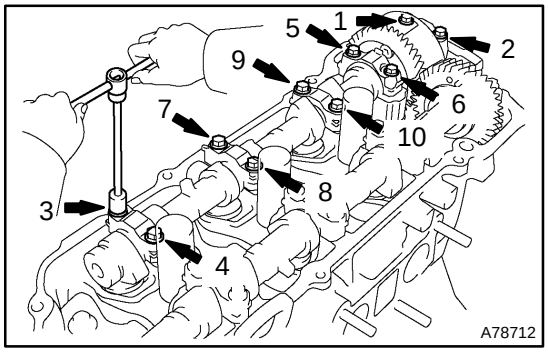

(c) Uniformly loosen and remove the 10 bearing cap bolts in the sequence shown in the illustration. Remove the 5 bearing caps and the No. 3 camshaft.

NOTICE:
- **Do not pry out the camshaft.**
- **Be careful not to damage the portion of the cylinder head receiving the shaft thrust.**

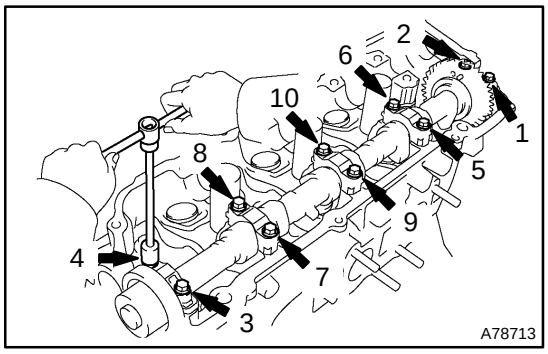

30. REMOVE NO.4 CAMSHAFT SUB−ASSY

(a) Uniformly loosen and remove the 10 bearing cap bolts in the sequence shown in the illustration. Remove the 5 bearing caps and the No. 4 camshaft.

NOTICE:
- **Do not pry out the camshaft.**
- **Be careful not to damage the portion of the cylinder head receiving the shaft thrust.**

(b) Remove the oil seal from the No. 4 camshaft.

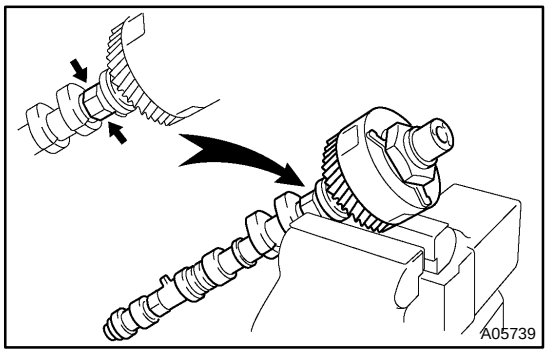

31. INSPECT CAMSHAFT TIMING GEAR ASSY

(a) Clamp the camshaft in a vise on the hexagonal lobe.

(b) Check that the VVT−i does not turn.

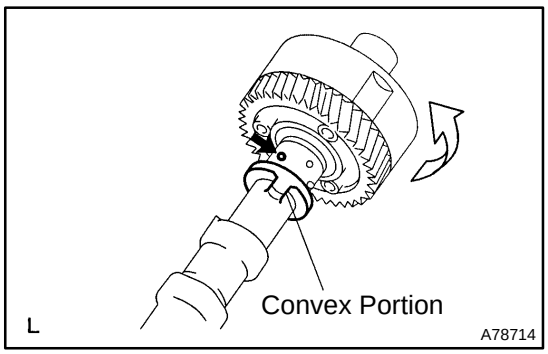

(c) Cover all the oil ports with vinyl tape except the port on the advanced angle side (nearest to the convex portion) shown in the illustration.

(d) Using an air gun, apply about 100 kPa (1 kgf/cm^2, 14 psi) of air pressure to the port on the advanced angle side.

NOTICE:

Some oil spraying will occur. Contain the spray with a shop rag.

HINT:

This operation releases the lock pin for the extreme retarded angle lock.

(e) Under the condition above, check that the VVT−i can be turned by hand to the advanced angle side, the direction of the white arrow in the illustration.

Standard: Must turn

HINT:
The VVT−i will turn to the advanced angle side without applying force by hand depending on the force of the air pressure applied. Also, if applying pressure to the oil path is difficult as a result of air leakage from the port, the lock−pin may be difficult to release.

(f) Check that the VVT−i moves freely within a 30 range. Avoid moving the VVT−i unit to the extreme retarded angle position as the lock−pin will re−engage.
Standard: Smooth movable range is about 30

(g) Turn VVT−i by hand and lock it at the extreme retarded angle position.

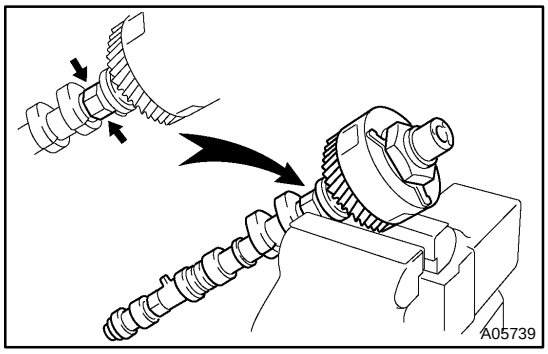

32. REMOVE CAMSHAFT TIMING GEAR ASSY

NOTICE:

Do not remove or install the timing gear (VVT−i) unless you are replacing the VVT−i or the camshaft.

(a) Clamp the camshaft in a vise on the hexagonal lobe.

NOTICE:

Do not damage the camshaft.

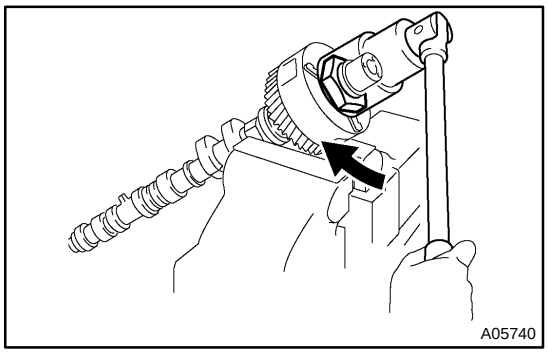

(b) Using a 46 mm socket wrench, remove the lock nut by turning it clockwise.

NOTICE:

- **Remove it with the lock−pin engaged and locked at the extreme retarded angle position.**
- **The lock nut has LH threads.**
- **Only use the socket wrench. Other tools will deform the cam angle rotor.**

(c) Remove the timing gear (VVT−i).

NOTICE:

Never remove the 3 bolts on the gear.

If it is difficult to remove the VVT−i, tap it lightly using a plastic−faced hammer and then remove it.

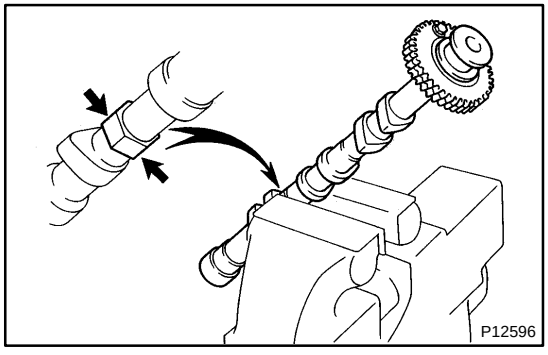

33. REMOVE CAMSHAFT SUB GEAR

(a) Clamp the camshaft in a vise on the hexagonal lobe.

NOTICE:

Be careful not to damage the camshaft.

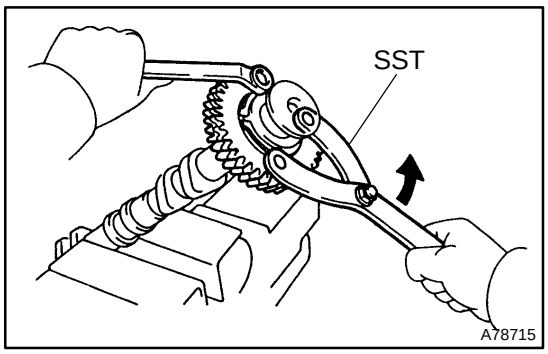

(b) Using SST, turn the sub gear counterclockwise, and remove the service bolt.
SST 09960−10010 (09962−01000, 09963−00500)

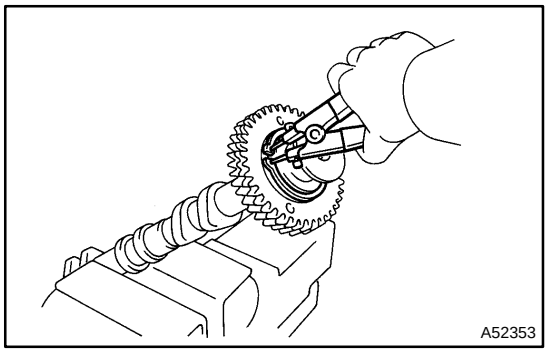

(c) Using snap ring pliers, remove the snap ring.
(d) Remove the wave washer, camshaft sub gear and camshaft gear bolt washer.

HINT:
Arrange the camshaft sub gears and gear bolt washers (RH and LH sides) so that they can be returned to the original location when reassembling.

34. REMOVE ENGINE HANGER NO.2

35. REMOVE CYLINDER HEAD COVER REAR

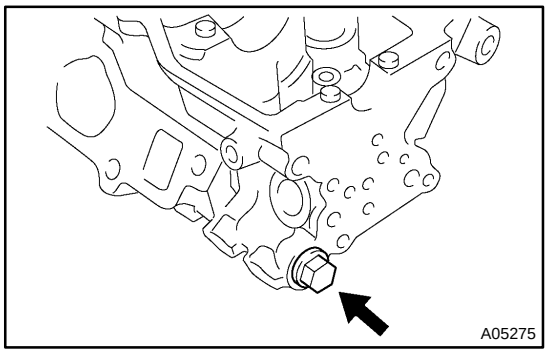

36. REMOVE OIL CONTROL VALVE FILTER

(a) Remove the plug, gasket and valve filter.

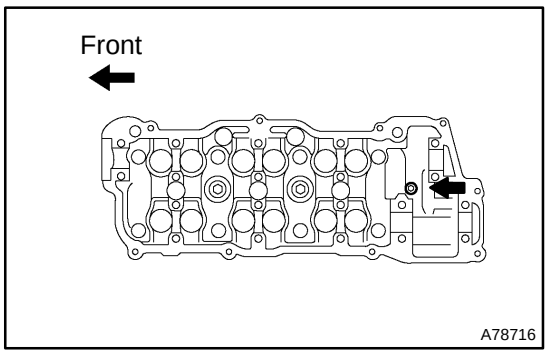

37. REMOVE CYLINDER HEAD SUB−ASSY

(a) Using a socket hexagon wrench 8, remove the hexagon bolt.

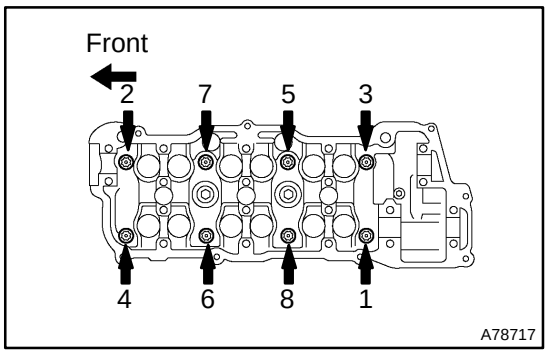

(b) Uniformly loosen the 8 cylinder head bolts in the sequence shown in the illustration. Remove the 8 cylinder head bolts and plate washers.

NOTICE:

- **Be careful not to drop washers into the cylinder head.**
- **Head warpage or cracking could result from removing bolts in an incorrect order.**

38. REMOVE CYLINDER HEAD GASKET

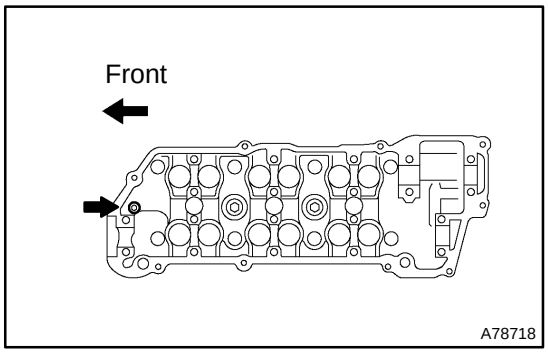

39. REMOVE CYLINDER HEAD LH

(a) Using a socket hexagon wrench 8, remove the hexagon bolt.

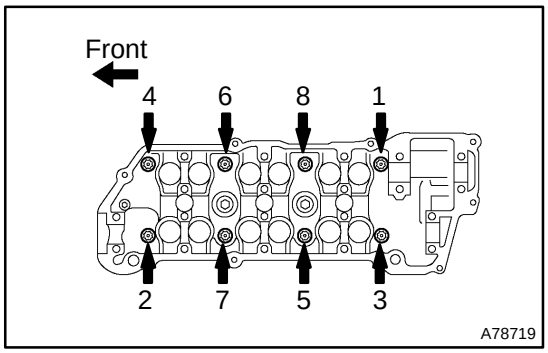

(b) Uniformly loosen the 8 cylinder head bolts in the sequence shown in the illustration. Remove the 8 cylinder head bolts and plate washers.

NOTICE:

- **Be careful not to drop washers into the cylinder head.**
- **Head warpage or cracking could result from removing bolts in an incorrect order.**

40. REMOVE CYLINDER HEAD GASKET NO.2

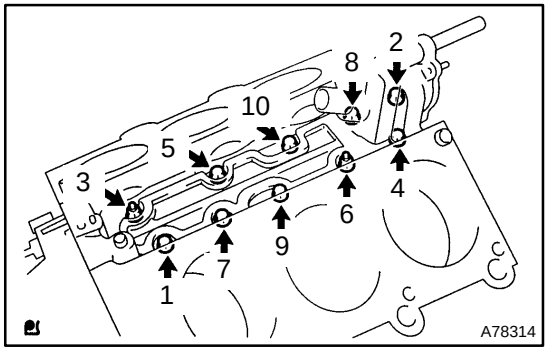

41. REMOVE WATER INLET HOUSING

(a) Uniformly loosen and remove the 8 bolts and 2 nuts in the sequence shown in the illustration. Remove the water inlet housing.

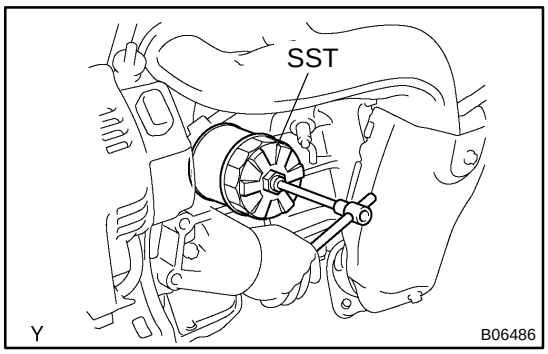

42. REMOVE OIL FILTER SUB−ASSY

(a) Using SST, remove the oil filter.
SST 09228−07501

(b) Using a socket hexagon wrench 12, remove the oil filter union.

43. REMOVE OIL PAN DRAIN PLUG

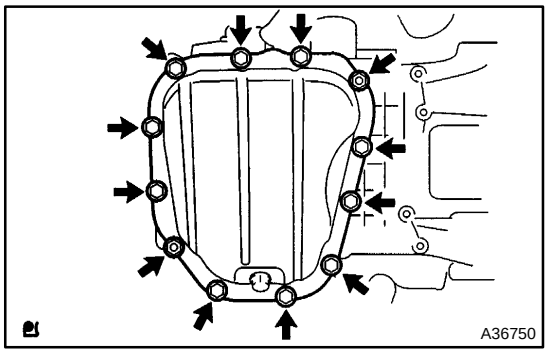

44. REMOVE OIL PAN SUB−ASSY NO.2

(a) Remove the 10 bolts and 2 nuts.

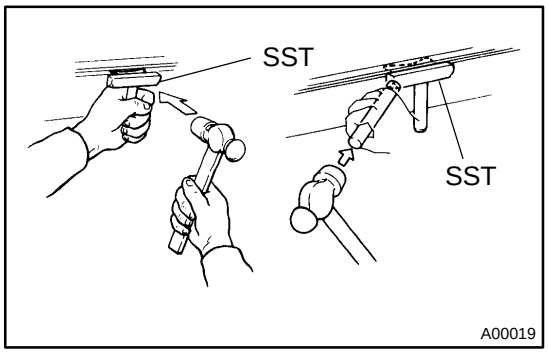

(b) Insert the blade of SST between oil pan No. 1 and oil pan No. 2, cut off the sealer and remove the oil pan No. 2.
SST 09032−00100

NOTICE:

- **Do not damage the contact surface of oil pan No. 1 and oil pan No. 2.**
- **Do not damage the flange portion of oil pan No. 2 during removal.**

45. REMOVE OIL STRAINER SUB−ASSY

(a) Remove the bolt and 2 nuts, then remove the oil strainer and the gasket.

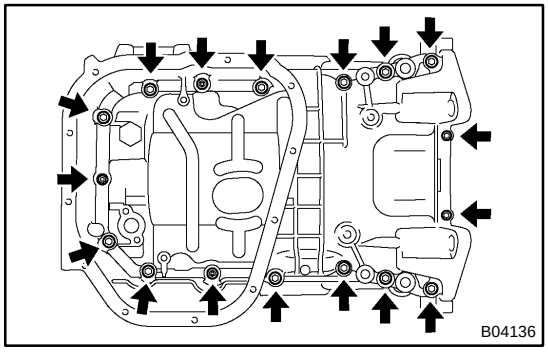

46. REMOVE OIL PAN SUB−ASSY

(a) Uniformly loosen and remove the 15 bolts and 2 nuts in the sequence shown in the illustration.

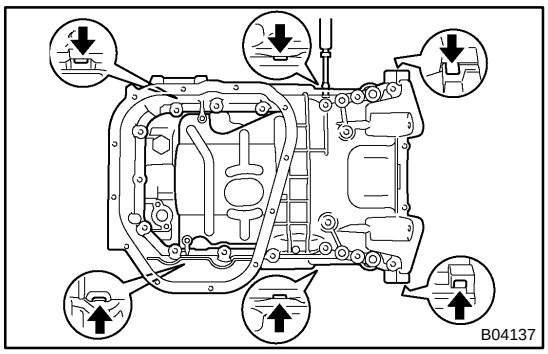

(b) Using a screwdriver, remove the oil pan by prying between the cylinder block and the oil pan.

NOTICE:

Be careful not to damage the contact surfaces of the oil pan and cylinder block.

47. REMOVE OIL PAN BAFFLE PLATE

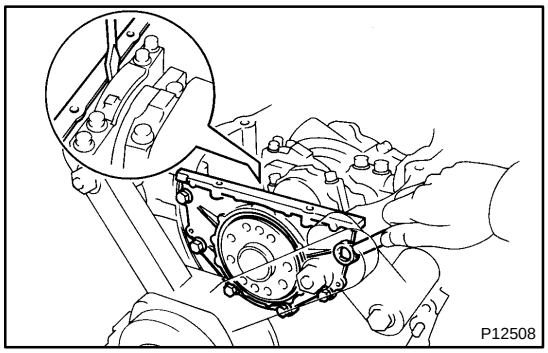

48. REMOVE ENGINE REAR OIL SEAL RETAINER

(a) Uniformly loosen and remove the 6 bolts.

(b) Using a screwdriver, remove the oil seal retainer by prying between the oil seal retainer and the main bearing cap.

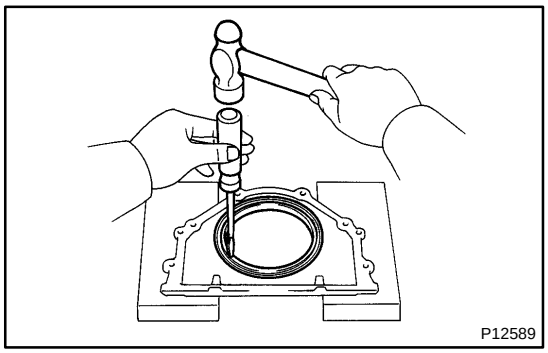

49. REMOVE ENGINE REAR OIL SEAL

(a) Using a screwdriver and a hammer, tap out the oil seal.

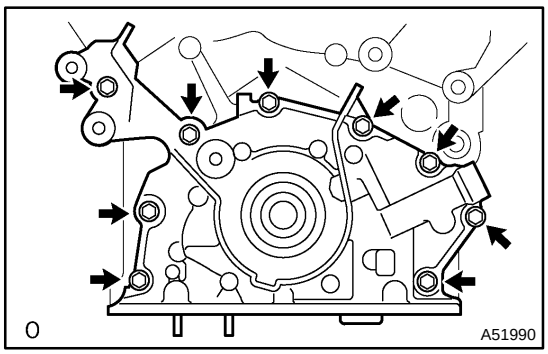

50. REMOVE OIL PUMP ASSY

(a) Remove the 9 bolts.

(b) Using a screwdriver, remove the oil pump by prying between the oil pump and the main bearing cap.

(c) Remove the O−ring.

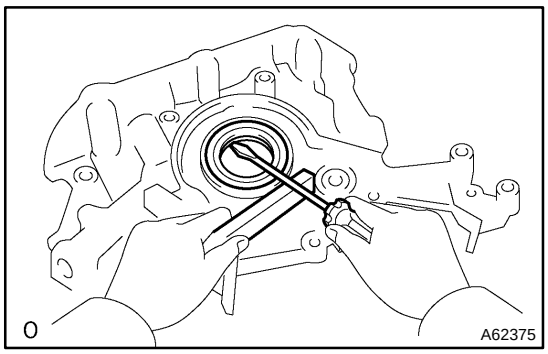

51. REMOVE OIL PUMP SEAL

(a) Using a screwdriver, pry out the oil seal.

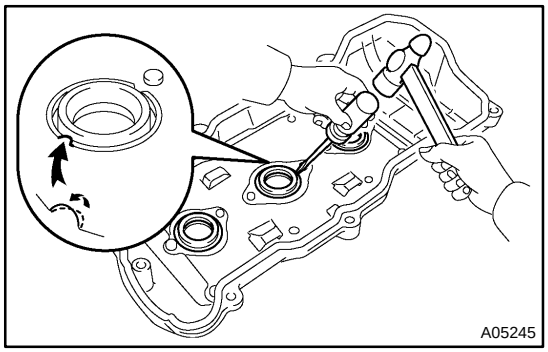

52. REMOVE SPARK PLUG TUBE GASKET

(a) Bend up the tab on the ventilation baffle plate which prevents the gasket from slipping out.

NOTICE:

Be careful not to damage the baffle plate of the cylinder head cover.

(b) Using a screwdriver and a hammer, tap out the gasket.

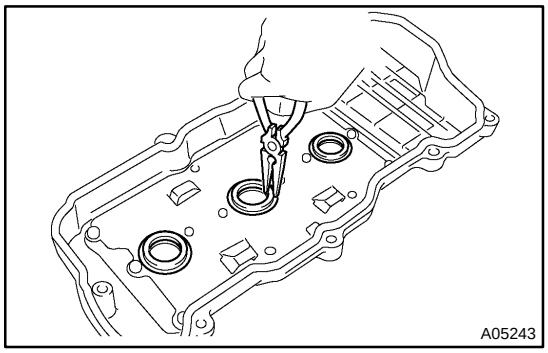

(c) Using needle−nose pliers, pry out the gasket.

NOTICE:

Be careful not to damage the cylinder head cover.

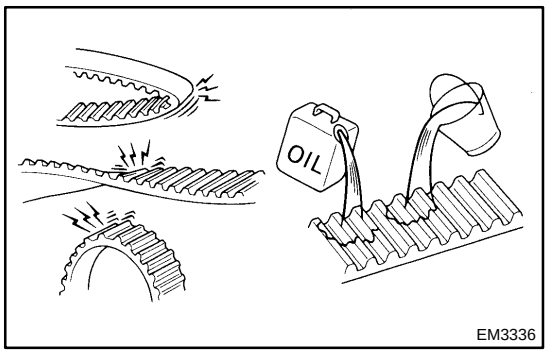

53. INSPECT TIMING BELT

NOTICE:

- **Do not bend, twist or turn the timing belt inside out.**
- **Do not allow the timing belt to come into contact with oil, water or steam.**
- **Do not utilize timing belt tension when installing or removing the mounting bolt of the camshaft timing pulley.**

Check the belt for any defects, as shown in the illustrations. Also, check these points below.

(a) If there is premature parting:
- Check for proper installation.
- Check the timing cover gasket for damage and proper installation.

(b) If the belt teeth are cracked or damaged, check to see if either camshaft is locked.

(c) If there is noticeable wear or cracks on the belt face, check to see if there are nicks on the side of the idler pulley lock and water pump.

(d) If there is wear or damage on only one side of the belt, check the belt guide and the alignment of each pulley.
(e) If there is noticeable wear on the belt teeth:
- Check the timing cover for damage.
- Check that the gasket has been installed correctly.
- Check for foreign object on the pulley teeth.

If there is any doubt about the belt condition, replace the timing belt.

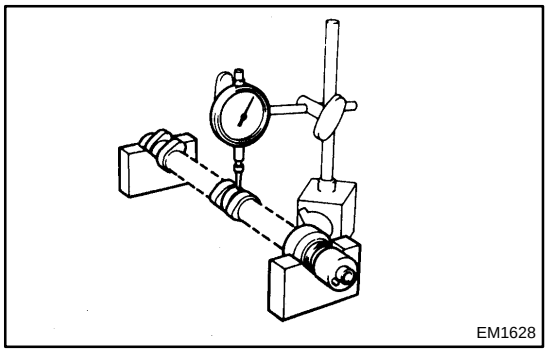
EM1628

54. INSPECT CAMSHAFT

(a) Inspect the camshaft for runout.
(1) Place the camshaft on V−blocks.
(2) Using a dial indicator, measure the runout at the center journal.

Maximum circle runout: 0.06 mm (0.0024 in.)

If the runout is greater than the maximum, replace the camshaft.

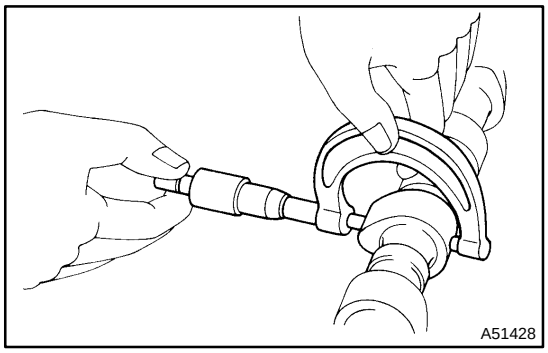
A51428

(b) Inspect the cam lobes.
(1) Using a micrometer, measure the cam lobe height.

Specified cam lobe height:

1MZ−FE

Item	Specified Condition
Intake	42.780 to 43.032 mm (1.6842 to 1.6942 in.)
Exhaust	42.610 to 42.864 mm (1.6776 to 1.6876 in.)

3MZ−FE

Item	Specified Condition
Intake	42.980 to 43.232 mm (1.6921 to 1.7020 in.)
Exhaust	42.860 to 43.110 mm (1.6874 to 1.6972 in.)

If the cam lobe height is less than the minimum, replace the camshaft.

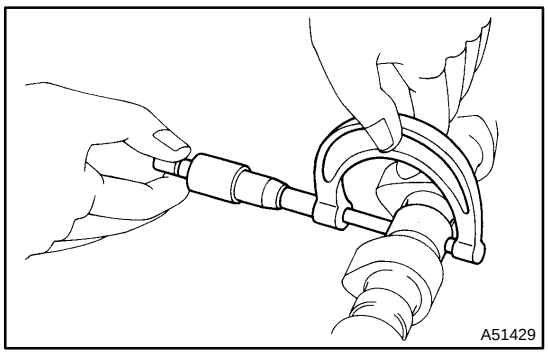
A51429

(c) Inspect the camshaft journals.
(1) Using a micrometer, measure the journal diameter.

Journal diameter:

26.959 to 26.975 mm (1.0614 to 1.0620 in.)

If the journal diameter is not as specified, check the oil clearance.

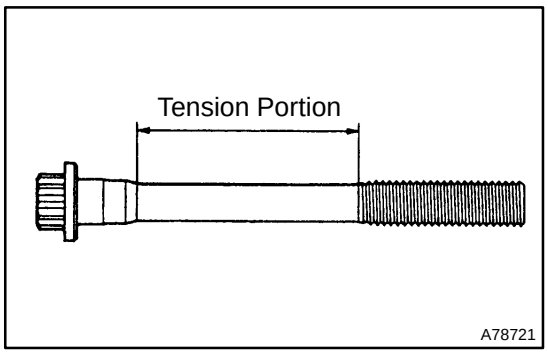

55. INSPECT CYLINDER HEAD SET BOLT

(a) Using a vernier caliper, measure the tension portion diameter of the bolt.

Specified outside diameter:
8.75 to 9.05 mm (0.3445 to 0.3563 in.)

If the diameter is less than the minimum, replace the bolt.

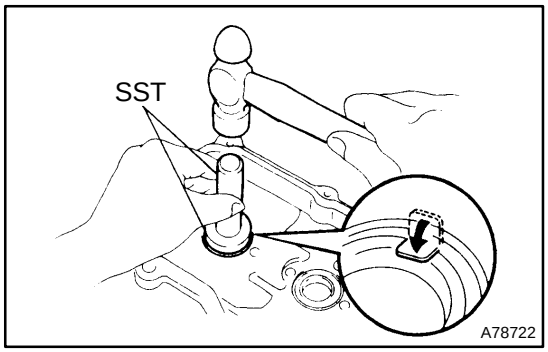

56. INSTALL SPARK PLUG TUBE GASKET

(a) Using SST and a hammer, tap in a new gasket until its surface is flush with the upper edge of the cylinder head cover.

SST 09950−60010 (09951−00430), 09950−70010 (09951−07100)

(b) Return the ventilation plate tab to its original position.

(c) Apply a light coat of MP grease to the gasket lip.

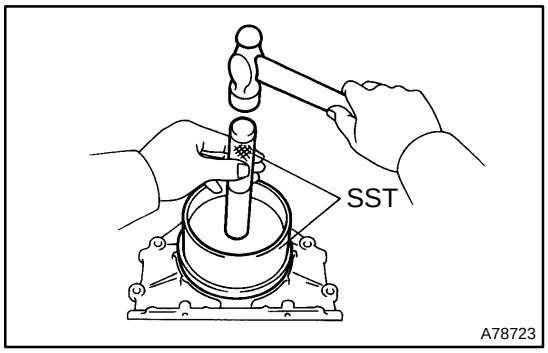

57. INSTALL ENGINE REAR OIL SEAL

(a) Using SST and a hammer, tap in a new oil seal until its surface is flush with the rear oil seal retainer edge.

SST 09223−15030, 09950−70010 (09951−07100)

NOTICE:

- **Be careful not to tap the oil seal at an angle.**
- **Keep the gap between the rear oil seal retainer edge and the oil seal free of foreign matter.**

(b) Apply MP grease to the oil seal lip.

58. INSTALL ENGINE REAR OIL SEAL RETAINER

(a) Remove any old packing material from the contact surface.

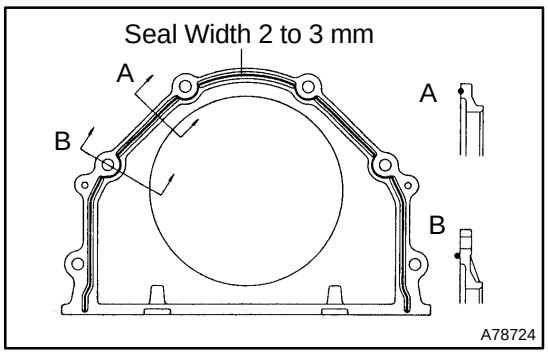

(b) Apply a continuous bead of seal packing (diameter 2 to 3 mm (0.08 to 0.12 in.)) as shown in the illustration.

Seal packing: Part No. 08826−00080 or equivalent

NOTICE:

- **Remove any oil from the contact surface.**
- **Install the oil seal retainer within 3 minutes after applying seal packing.**
- **Do not expose the seal to engine oil for at least 2 hours after installing.**

(c) Install the oil seal retainer. Tighten the 6 bolts uniformly.

Torque: 8.0 N·m (82 kgf·cm, 71 in.·lbf)

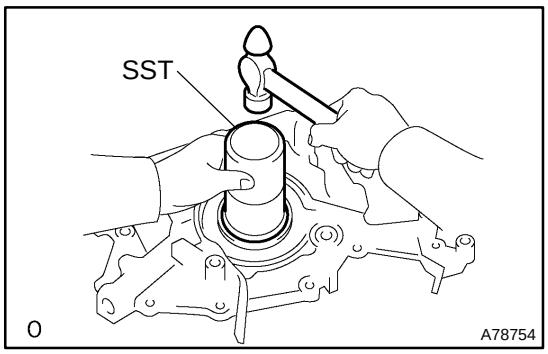

59. INSTALL OIL PUMP SEAL

(a) Using SST and a hammer, tap in a new oil seal until its surface is flush with the oil pump body edge.
SST 09223−00010

NOTICE:

- **Be careful not to tap the oil seal at an angle.**
- **Keep the gap between the oil pump body edge and the oil seal free of foreign matter.**

(b) Apply MP grease to the oil seal lip.

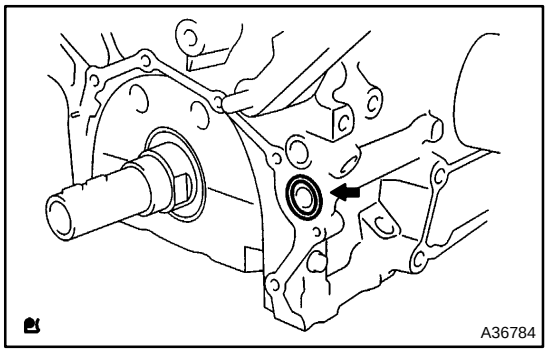

60. INSTALL OIL PUMP ASSY

(a) Remove any old packing material from the contact surface.

(b) Apply a light coat of engine oil to a new O−ring and place it on the cylinder block.

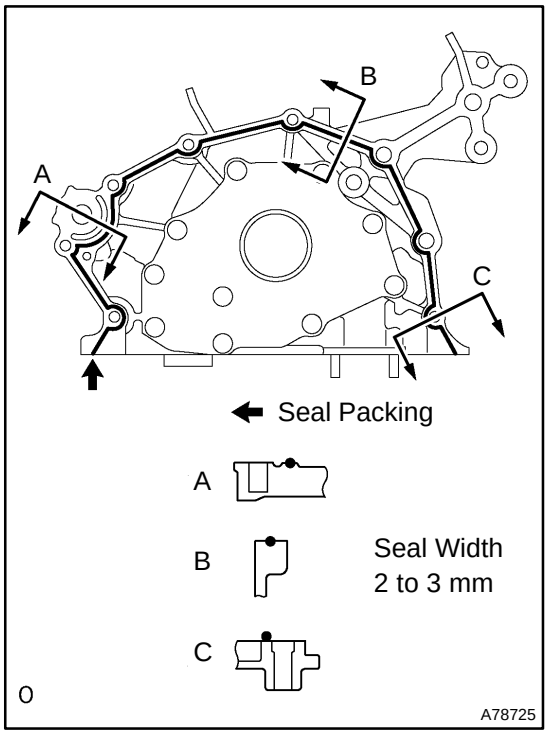

(c) Apply a continuous bead of seal packing (diameter 2 to 3 mm (0.08 to 0.12 in.)) as shown in the illustration.
Seal packing: Part No. 08826−00080 or equivalent

NOTICE:

- **Remove any oil from the contact surface.**
- **Apply seal packing to the inner side of the bolt holes.**
- **Install the oil pump within 3 minutes after applying seal packing.**
- **Do not expose the seal to engine oil for at least 2 hours after installing the oil pump.**

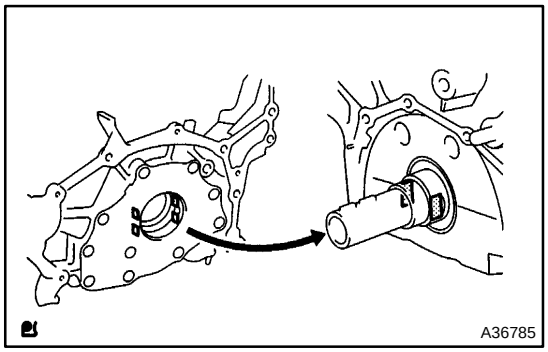

(d) Align the key of the oil pump drive gear with the keyway located on the crankshaft, and slide the oil pump into place.

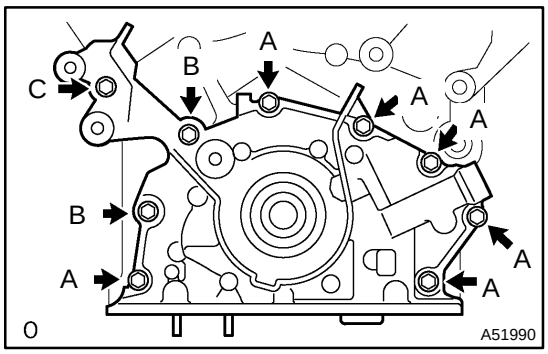

(e) Install the oil pump with the 9 bolts. Tighten the bolts uniformly in several steps.
Torque:
8.0 N·m (82 kgf·cm, 71 in.·lbf) for bolt A
20 N·m (204 kgf·cm, 15 ft·lbf) for bolt B
43 N·m (439 kgf·cm, 32 ft·lbf) for bolt C

61. INSTALL CRANKSHAFT POSITION SENSOR
Torque: 8.0 N·m (80 kgf·cm, 71 in.·lbf)

62. INSTALL OIL PAN BAFFLE PLATE
Torque: 8.0 N·m (82 kgf·cm, 71 in.·lbf)

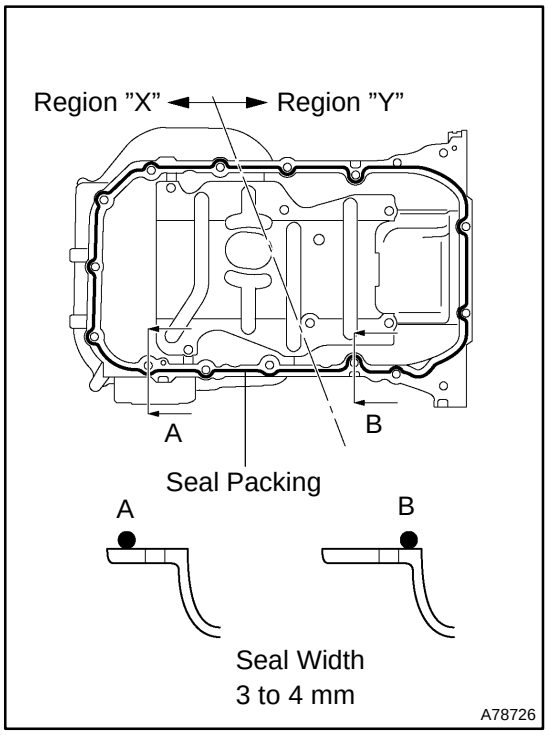

63. INSTALL OIL PAN SUB−ASSY
(a) Remove any old seal packing from the contact surface.
(b) Apply a continuous bead of seal packing (diameter 3 to 4 mm (0.12 to 0.16 in.)) as shown in the illustration.
Seal packing: Part No. 08826−00080 or equivalent

NOTICE:
- **Remove any oil from the contact surface.**
- **Apply seal packing to the outer side of the bolt holes in region ”X”.**
- **Apply seal packing to the inner side of the bolt holes in region ”Y”.**
- **Install the oil pan within 3 minutes after applying seal packing.**
- **Do not expose the seal to engine oil for at least 2 hours after installing.**

(c) Install the oil pan No. 1 with the 15 bolts and 2 nuts. Tighten the bolts uniformly in several steps.
Torque:
8.0 N·m (82 kgf·cm, 71 in.·lbf) for 10 mm head
20 N·m (199 kgf·cm, 14 ft·lbf) for 12 mm head

64. INSTALL OIL STRAINER SUB−ASSY
(a) Install a new gasket and the oil strainer with the bolt and 2 nuts.
Torque: 8.0 N·m (82 kgf·cm, 71 in.·lbf)

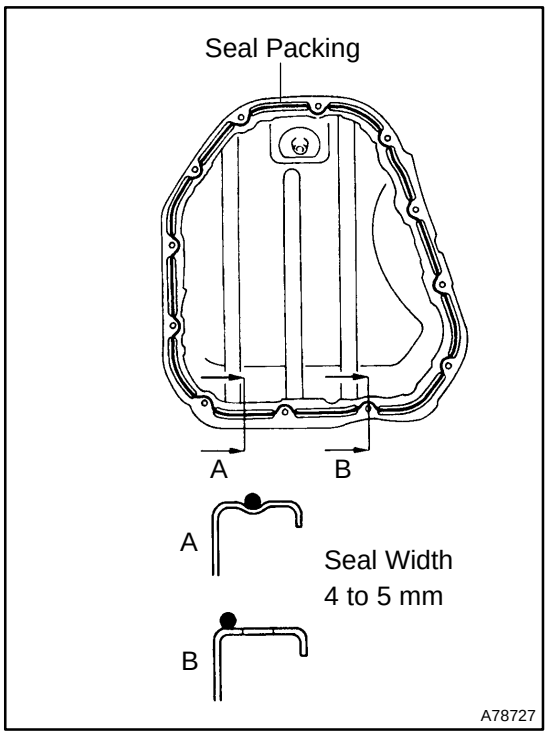

65. INSTALL OIL PAN SUB−ASSY NO.2

(a) Remove any old seal packing from the contact surface.

(b) Apply a continuous bead of seal packing (diameter 4 to 5 mm (0.16 to 0.20 in.)) as shown in the illustration.

Seal packing: Part No. 08826−00080 or equivalent

NOTICE:

- **Remove any oil from the contact surface.**
- **Apply seal packing to the inner side of the bolt holes.**
- **Install the oil pan within 3 minutes after applying seal packing.**
- **Do not expose the seal to engine oil for at least 2 hours after installing.**

(c) Install the oil pan No. 2 with the 10 bolts and 2 nuts.

Torque: 8.0 N·m (82 kgf·cm, 71 in.·lbf)

66. INSTALL OIL PAN DRAIN PLUG

(a) Install the drain plug with a new gasket.

Torque: 45 N·m (459 kgf·cm, 33 ft·lbf)

67. INSTALL WATER INLET HOUSING

(a) Remove any old packing material from the contact surface.

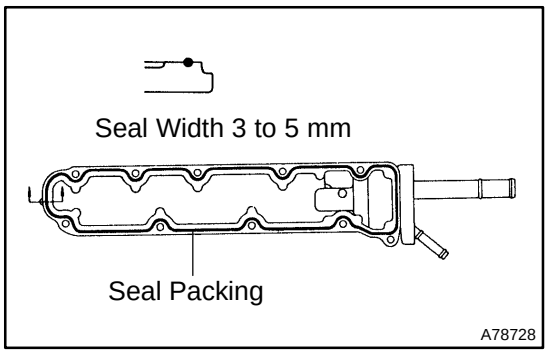

(b) Apply a continuous bead of seal packing (diameter 3 to 5 mm (0.12 to 0.20 in.)) as shown in the illustration.

Seal packing: Part No. 08826−00100 or equivalent

NOTICE:

- **Remove any oil from the contact surface.**
- **Install the water inlet housing within 3 minutes after applying seal packing.**
- **Do not expose the seal to coolant for at least 2 hours after installing.**

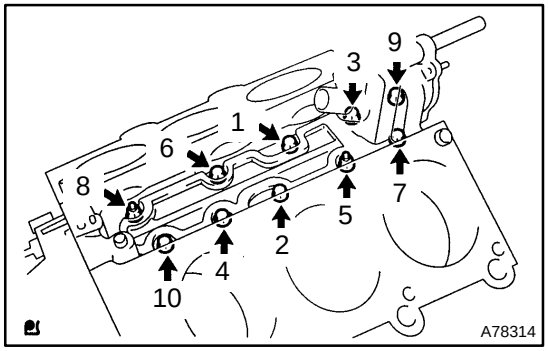

(c) Install the water inlet housing with the 8 bolts and 2 nuts. Uniformly tighten the bolts and nuts in the sequence shown in the illustration.

Torque: 8.0 N·m (82 kgf·cm, 71 in.·lbf)

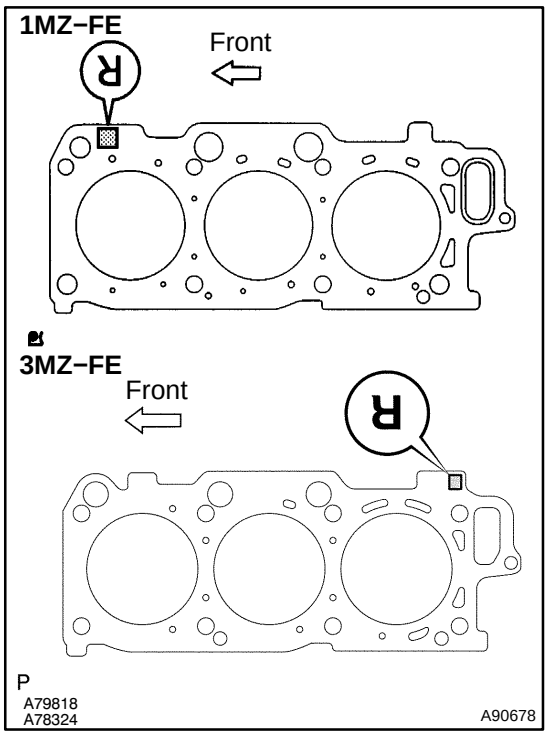

68. INSTALL CYLINDER HEAD GASKET

(a) Place a new cylinder head gasket on the cylinder block with the R mark upside down, as shown in the illustration.

NOTICE:

- **Remove any oil from the contact surface.**
- **Make sure the cylinder head gasket is facing in the correct direction.**
- **Place the cylinder head on the gasket carefully in order not to damage the gasket at the bottom part of the head.**

69. INSTALL CYLINDER HEAD SUB−ASSY

NOTICE:

The cylinder head bolts are tightened in 2 successive steps.

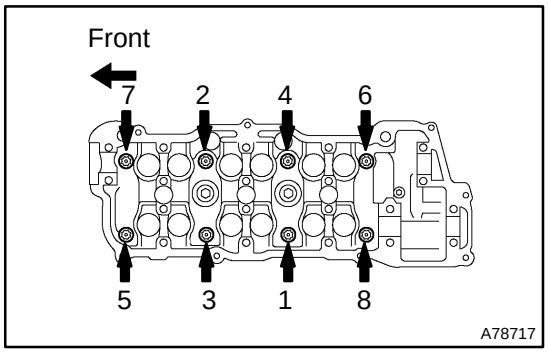

(a) Apply a light coat of engine oil on the threads of the cylinder head bolts.

(b) Install the plate washers to the cylinder head bolts.

(c) Uniformly install and tighten the 8 cylinder head bolts in the sequence shown in the illustration.

Torque: 54 N·m (550 kgf·cm, 40 ft·lbf)

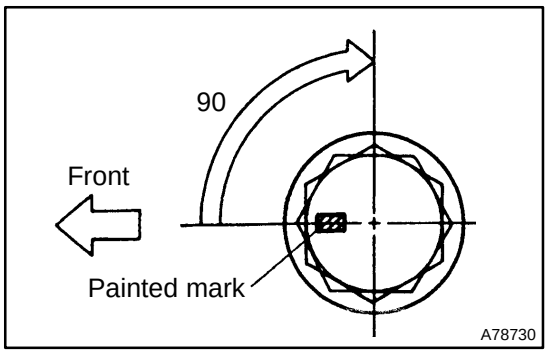

(d) Mark the front side of each cylinder head bolt head with paint as shown in the illustration.

(e) Retighten the cylinder head bolts by 90 in the same sequence as step (c).

(f) Check that each painted mark is now at a 90 angle to the front.

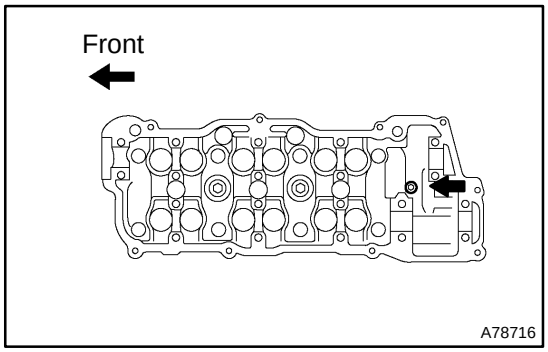

(g) Using a socket hexagon wrench 8, install the hexagon bolt.

Torque: 19 N·m (189 kgf·cm, 14 ft·lbf)

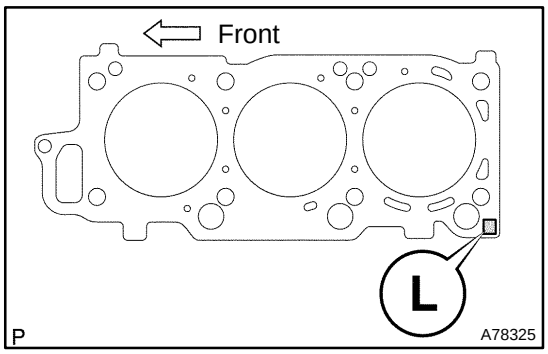

70. INSTALL CYLINDER HEAD GASKET NO.2

(a) Place a new cylinder head gasket on the cylinder block with the L mark as shown in the illustration.

NOTICE:

- **Remove any oil from the contact surface.**
- **Make sure the cylinder head gasket is facing in the correct direction.**
- **Place the cylinder head on the gasket carefully in order not to damage the gasket at the bottom part of the head.**

71. INSTALL CYLINDER HEAD LH

NOTICE:

The cylinder head bolts are tightened in 2 successive steps.

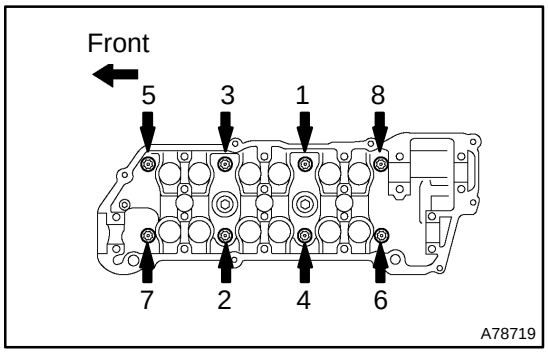

(a) Apply a light coat of engine oil on the threads of the cylinder head bolts.

(b) Install the plate washers to the cylinder head bolts.

(c) Uniformly install and tighten the 8 cylinder head bolts in the sequence shown in the illustration.

Torque: 54 N·m (550 kgf·cm, 40 ft·lbf)

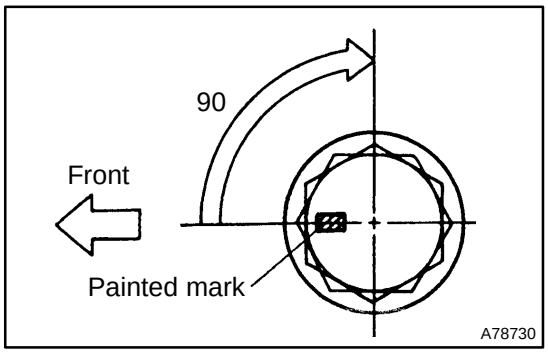

(d) Mark the front side of each cylinder head bolt head with paint as shown in the illustration.

(e) Retighten the cylinder head bolts by 90 in the same sequence as step (c).

(f) Check that each painted mark is now at a 90 angle to the front.

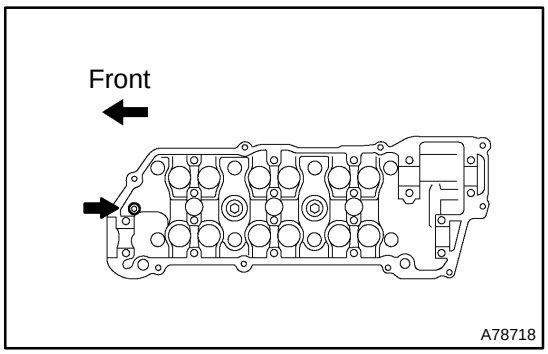

(g) Using a socket hexagon wrench 8, install the hexagon bolt.

Torque: 19 N·m (189 kgf·cm, 14 ft·lbf)

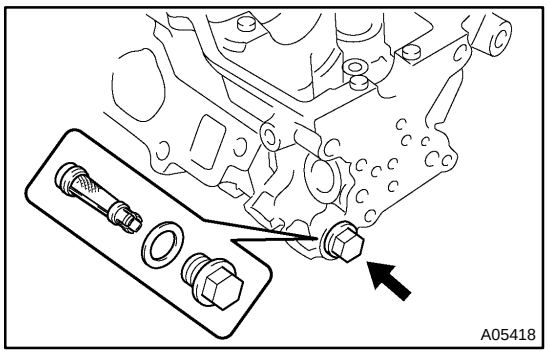

72. INSTALL OIL CONTROL VALVE FILTER

(a) Check that no foreign matter is on the mesh part of the filter.

(b) Assemble the valve filter and the plug.

(c) Install a new gasket and the plug.
Torque: 45 N·m (459 kgf·cm, 33 ft·lbf)

73. INSTALL CYLINDER HEAD COVER REAR

(a) Install a new gasket and the rear cover with the 4 bolts.
Torque: 10 N·m (102 kgf·cm, 7 ft·lbf)

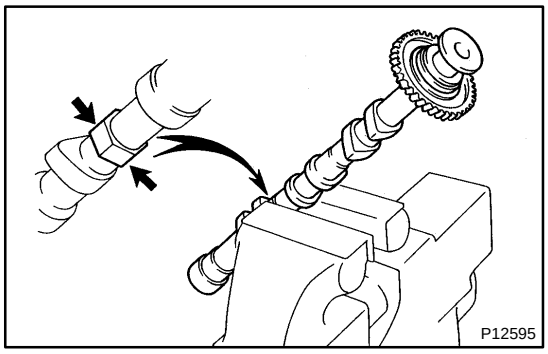

74. INSTALL CAMSHAFT SUB GEAR

(a) Clamp the camshaft in a vise on the hexagonal lobe.

NOTICE:

Be careful not to damage the camshaft.

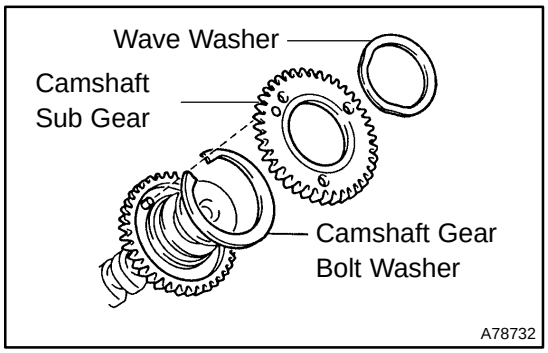

(b) Install the camshaft gear bolt washer and the camshaft sub gear.

HINT:

Attach the pins on the gears to the gear bolt washer ends.

(c) Install the wave washer.

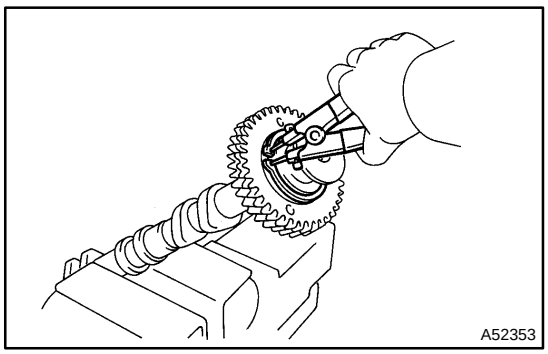

(d) Using snap ring pliers, install the snap ring.

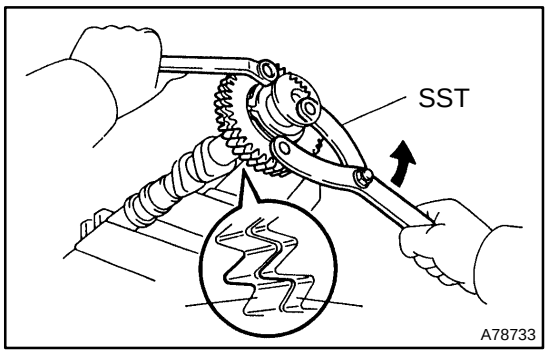

(e) Using SST, align the holes of the camshaft main gear and sub gear by turning the camshaft sub gear counterclockwise, and temporarily install a service bolt.
SST 09960−10010 (09962−01000, 09963−00500)

(f) Align the gear teeth of the main gear and sub gear, and tighten the service bolt.
Torque: 5.4 N·m (55 kgf·cm, 48 in.·lbf)

NOTICE:

Be careful not to damage the camshaft journals.

HINT:

When installing the camshaft, make certain that the torsional spring force of the sub gear has been eliminated by installation of the service bolt.

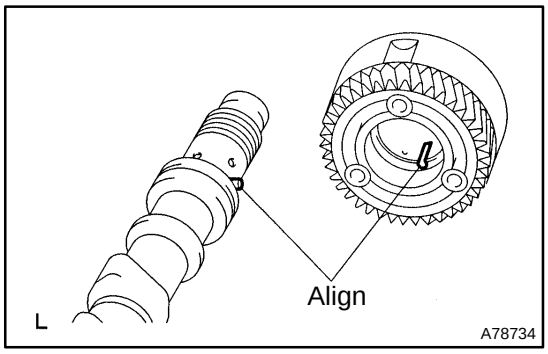

75. INSTALL CAMSHAFT TIMING GEAR ASSY

(a) Align the alignment pin with the alignment pin groove and install the VVT−i on the camshaft.

NOTICE:

Install the VVT−i with the lock−pin engaged and locked at the extreme retarded angle position.

(b) Apply engine oil on the nut, the mounting surface of the VVT−i and the screw threads.

NOTICE:

- **Be sure to apply the oil, otherwise the specified torque cannot be obtained.**
- **New nuts must be used when replacing the VVT−i unit.**

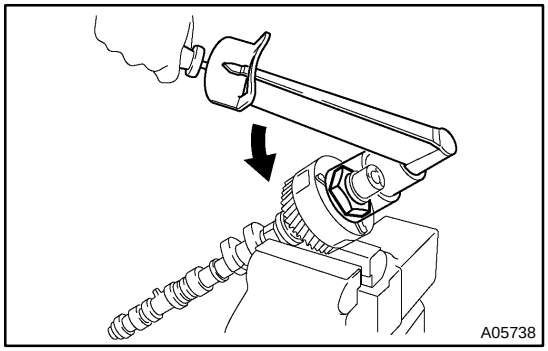

(c) Using a 46 mm socket wrench, install and tighten a lock nut by turning it counterclockwise.
Torque: 150 N·m (1,530 kgf·cm, 111 ft·lbf)

NOTICE:

- **The lock nut has LH threads.**
- **Never use any tool other than the socket wrench. Other tools will deform the cam angle rotor.**

76. INSTALL NO.2 CAMSHAFT

NOTICE:

Since the thrust clearance of the camshaft is small, the camshaft must be kept level while it is being installed. If the camshaft is not kept level, damage to the cylinder head or to the camshaft may result. To avoid this, the following steps must be carried out.

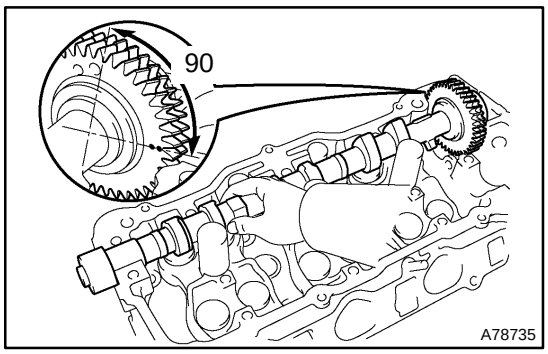

(a) Apply new engine oil to the thrust portion and journal of the camshaft.
(b) Place the No. 2 camshaft at a 90 angle of the timing mark (2 dot marks) on the cylinder head.
(c) Apply MP grease to a new oil seal lip.

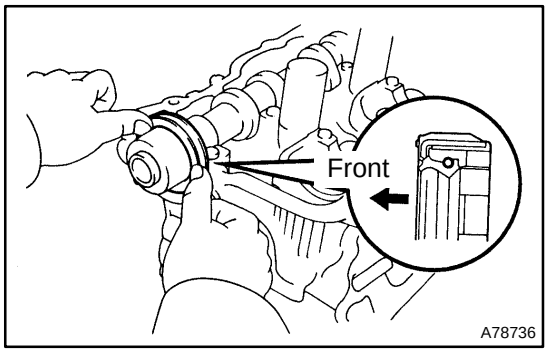

(d) Install the oil seal to the camshaft.

NOTICE:

- **Do not turn over the oil seal lip.**
- **Insert the oil seal until it stops.**

(e) Remove any old packing material from the contact surface.

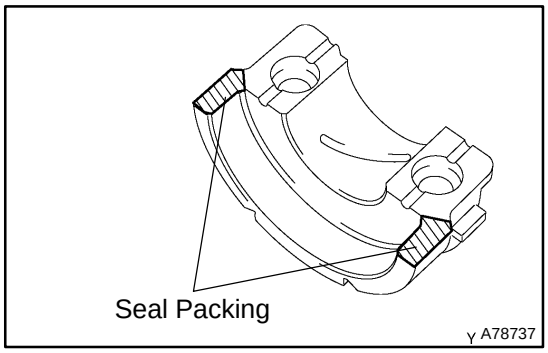

(f) Apply seal packing to the No. 1 bearing cap as shown in the illustration.
Seal packing: Part No. 08826−00080 or equivalent

NOTICE:

- **Install the No. 1 bearing cap within 5 minutes after applying seal packing.**
- **Do not expose the seal to engine oil for at least 2 hours after installing.**

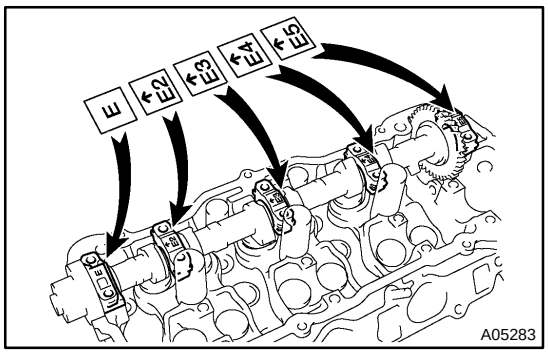

(g) Install the 5 bearing caps in their proper locations.
(h) Apply a light coat of engine oil on the threads of the bearing cap bolts.

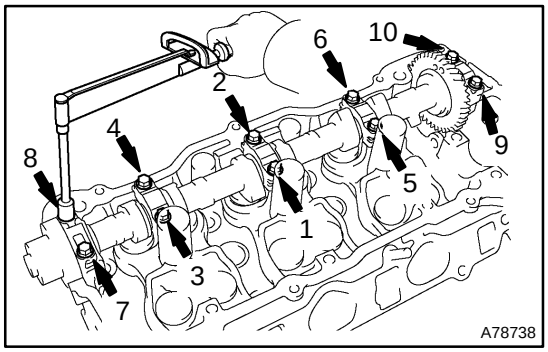

(i) Uniformly tighten the 10 bearing cap bolts in the sequence shown in the illustration.
Torque: 16 N·m (163 kgf·cm, 12 ft·lbf)

77. INSTALL CAMSHAFT

NOTICE:

Since the thrust clearance of the camshaft is small, the camshaft must be kept level while it is being installed. If the camshaft is not kept level, damage to the cylinder head or to the camshaft may result. To avoid this, the following steps must be carried out.

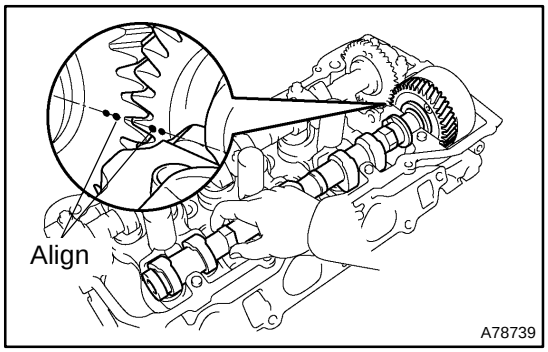

(a) Apply new engine oil to the thrust portion and journal of the camshaft.
(b) Align the camshaft drive and driven gear's timing marks (2 dot marks each).
(c) Place the camshaft on the cylinder head.

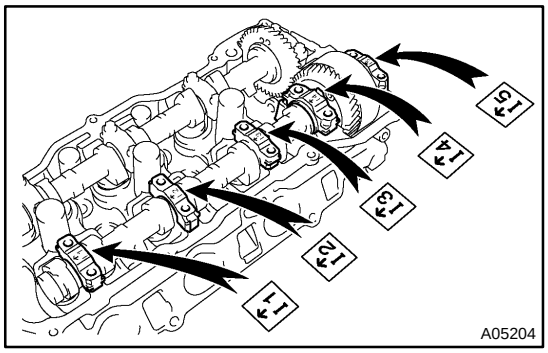

(d) Install the 5 bearing caps in their proper locations.
(e) Apply a light coat of engine oil on the threads of the bearing cap bolts.

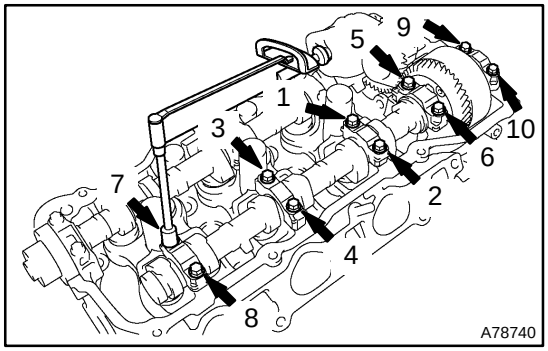

(f) Uniformly tighten the 10 bearing cap bolts uniformly in the sequence shown in the illustration.
Torque: 16 N·m (163 kgf·cm, 12 ft·lbf)
(g) Remove the service bolt.

78. INSTALL NO.4 CAMSHAFT SUB−ASSY

NOTICE:

Since the thrust clearance of the camshaft is small, the camshaft must be kept level while it is being installed. If the camshaft is not kept level, damage to the cylinder head or to the camshaft may result. To avoid this, the following steps must be carried out.

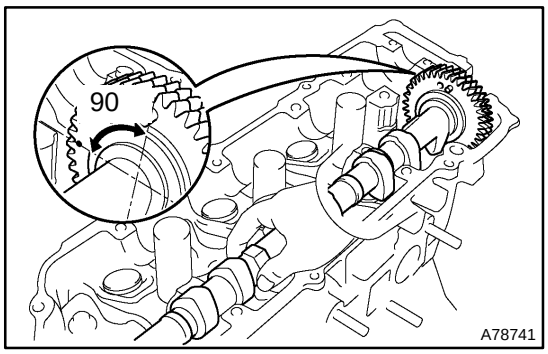

(a) Apply new engine oil to the thrust portion and journal of the camshaft.
(b) Place the No. 4 camshaft at a 90 angle of the timing mark (1 dot mark) on the cylinder head.
(c) Apply MP grease to a new oil seal lip.

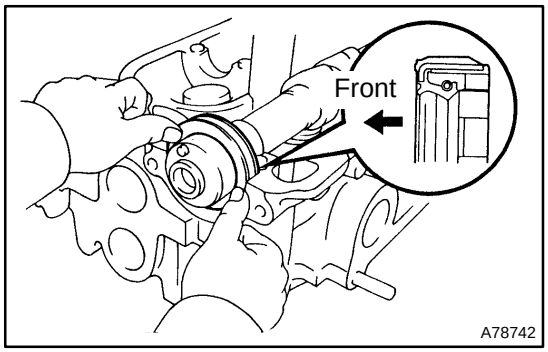

(d) Install the oil seal to the camshaft.

NOTICE:

- **Do not turn over the oil seal lip.**
- **Insert the oil seal until it stops.**

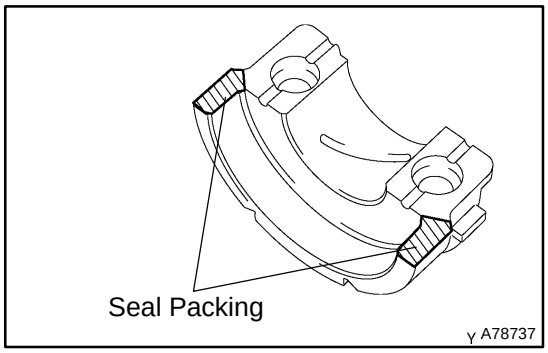

(e) Remove any old packing material from the contact surface.
(f) Apply seal packing to the No. 1 bearing cap as shown in the illustration.
Seal packing: Part No. 08826−00080 or equivalent

NOTICE:

- **Install the No. 1 bearing cap within 5 minutes after applying seal packing.**
- **Do not expose the seal to engine oil for at least 2 hours after installing.**

(g) Install the 5 bearing caps in their proper locations.
(h) Apply a light coat of engine oil on the threads of the bearing cap bolts.

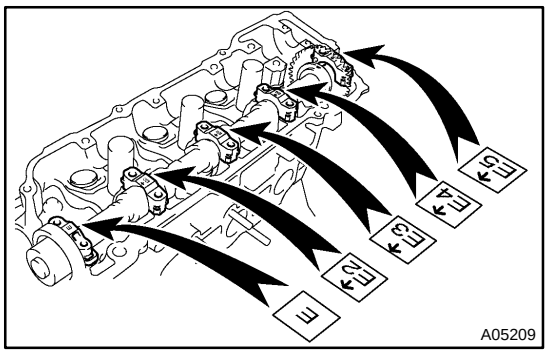

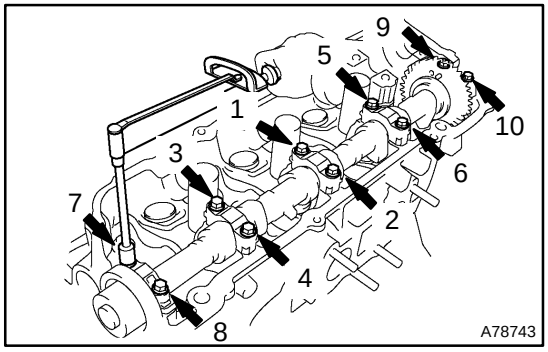

(i) Uniformly tighten the 10 bearing cap bolts in the sequence shown in the illustration.
Torque: 16 N·m (163 kgf·cm, 12 ft·lbf)

79. INSTALL NO.3 CAMSHAFT SUB−ASSY

NOTICE:

Since the thrust clearance of the camshaft is small, the camshaft must be kept level while it is being installed. If the camshaft is not kept level, damage to the cylinder head or to the camshaft may result. To avoid this, the following steps must be carried out.

(a) Apply new engine oil to the thrust portion and journal of the camshaft.

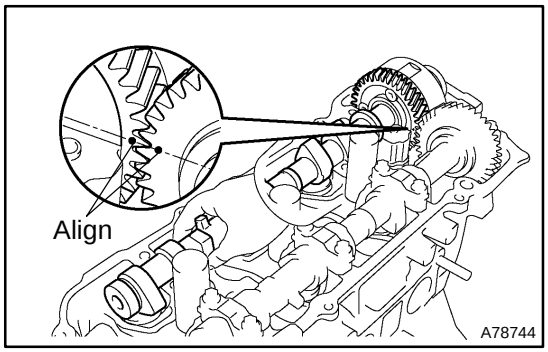

(b) Align the camshaft drive and driven gear's timing marks (1 dot mark each).

(c) Place the camshaft on the cylinder head.

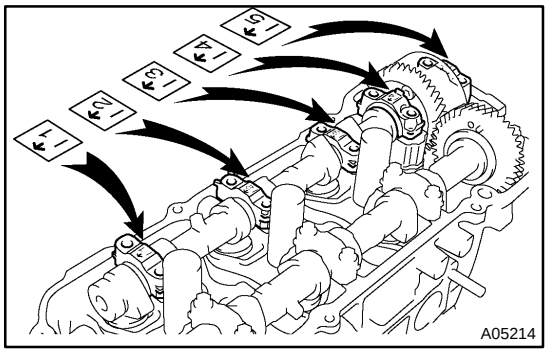

(d) Install the 5 bearing caps in their proper locations.

(e) Apply a light coat of engine oil on the threads of the bearing cap bolts.

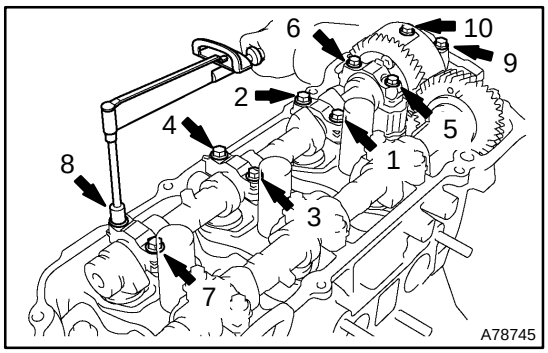

(f) Uniformly tighten the 10 bearing cap bolts in the sequence shown in the illustration.
Torque: 16 N·m (163 kgf·cm, 12 ft·lbf)

(g) Remove the service bolt.

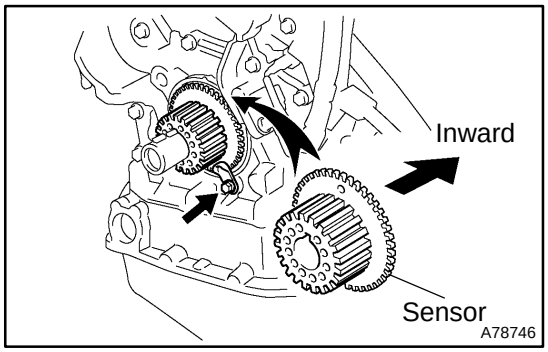

80. INSTALL CRANKSHAFT TIMING PULLEY

(a) Align the keyway of the timing pulley with the key located on the crankshaft and slide the timing pulley into place.

NOTICE:

Do not scratch the sensor area of the crankshaft timing pulley.

(b) Install the timing belt plate with the bolt.
Torque: 8.0 N·m (82 kgf·cm, 71 in.·lbf)

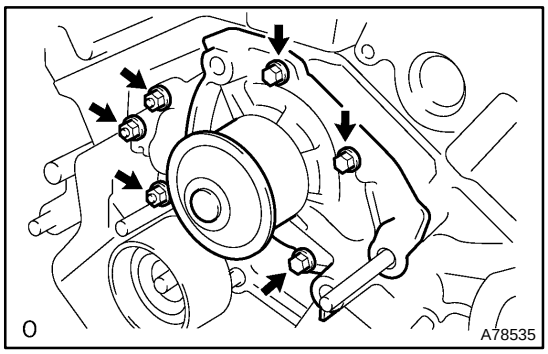

81. INSTALL WATER PUMP ASSY

(a) Install a new gasket and the water pump with the 3 bolts and 3 nuts.
Torque: 8.0 N·m (82 kgf·cm, 71 in.·lbf)

82. INSTALL OIL LEVEL GAGE GUIDE

(a) Apply a light coat of engine oil to a new O−ring and install it to the level gage guide.
(b) Install the level gage guide.
Torque: 8.0 N·m (82 kgf·cm, 71 in.·lbf)

83. INSTALL OIL FILTER SUB−ASSY

(a) Using a socket hexagon wrench 12, install the oil filter union.
Torque: 30 N·m (306 kgf·cm, 22 ft·lbf)
(b) Check and clean the oil filter installation surface.
(c) Apply clean engine oil to the gasket of a new oil filter.
(d) Lightly screw the oil filter into place, and tighten it until the gasket contacts the seat.
(e) Using SST, tighten it an additional 3/4 turn.
SST 09228−07501

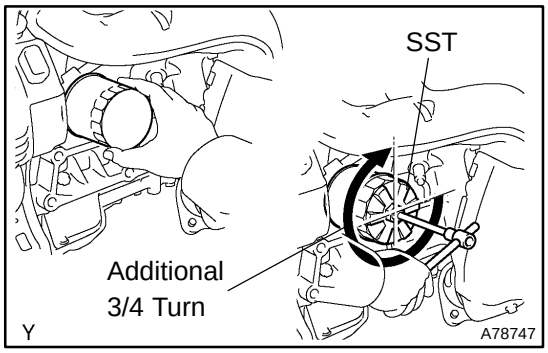

84. INSTALL TIMING BELT IDLER BRACKET
Torque: 28 N·m (286 kgf·cm, 21 ft·lbf)

85. INSTALL TIMING BELT NO.3 COVER

(a) Visually check for cracks and breaks on the gasket of the timing belt cover.

HINT:
If water is entering through cracks or breaks in the gasket, repair according to these guidelines: 1) if the crack length is within 2 to 3 cm (0.79 to 1.18 in.), repair with seal packing; or 2) if the crack length is over 3 cm (1.18 in.), replace the gasket.

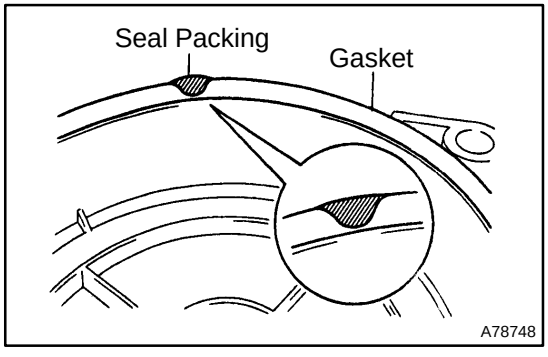

(b) If the timing belt cover gasket needs to be repaired, follow the procedure below.
(1) Repair the cracks and breaks by applying the seal packing to the damaged area.
Seal packing: Part No. 08826−00080 or equivalent

NOTICE:
When applying the seal packing, apply it as wide and high as the gasket.

(c) If the timing belt cover gasket needs to be replaced, follow the procedure below.

(1) Using a screwdriver and gasket scraper, remove the remaining gasket.

NOTICE:
Be careful not to damage the timing belt cover.

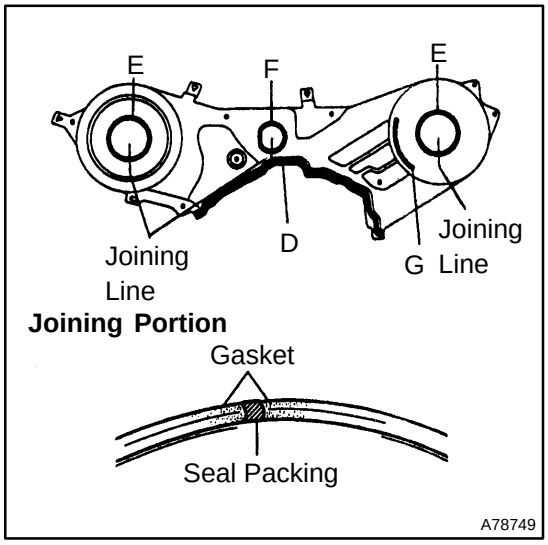

(2) Remove the backing paper from a new gasket, and affix the gasket along the groove of the timing belt cover as shown in the illustration.

NOTICE:
- **Affix the gasket in the center of the groove.**
- **At the corners, try to keep the gasket thickness uniform.**

Length:

Gasket	D	E	F	G
Specified Condition	335 mm (13.19 in.)	180 mm (7.09 in.)	133 mm (5.24 in.)	72 mm (2.83 in.)

(3) If there is a gap on the joint of the gasket, apply seal packing to close the gap.

Seal packing: Part No. 08826−00080 or equivalent

NOTICE:
When applying the seal packing, apply it as wide and high as the gasket.

(d) Install the timing belt cover with the 6 bolts.
Torque: 8.5 N·m (87 kgf·cm, 76 in.·lbf)

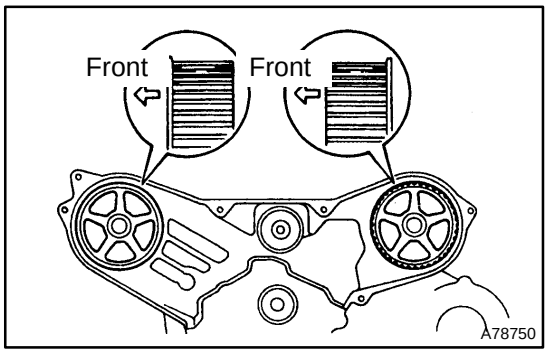

86. INSTALL CAMSHAFT TIMING PULLEY

(a) Install the camshaft timing pulley with the belt guide properly oriented and tighten the bolt temporarily.

HINT:
- Face the belt guide of the RH timing pulley towards the front of the engine.
- Face the belt guide of the LH timing pulley towards the rear of the engine.

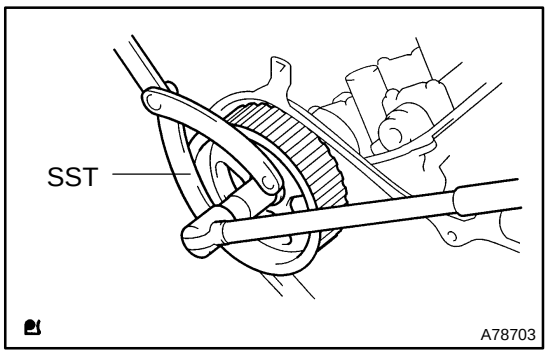

(b) Using SST, tighten the RH pulley bolt.
SST 09960−10010 (09962−01000, 09963−01000)
Torque: 125 N·m (1,275 kgf·cm, 92 ft·lbf)

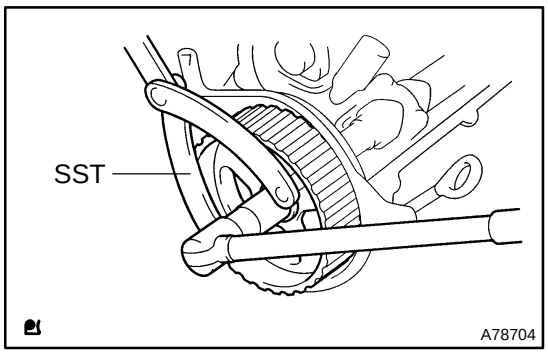

(c) Using SST, tighten the LH pulley bolt.
SST 09960−10010 (09962−01000, 09963−01000)
Torque: 125 N·m (1,275 kgf·cm, 92 ft·lbf)

87. INSTALL TIMING BELT IDLER SUB−ASSY NO.2
Torque: 43 N·m (438 kgf·cm, 32 ft·lbf)

88. INSTALL TIMING BELT IDLER SUB−ASSY NO.1

(a) Using a socket hexagon wrench 10, install the plate washer and timing belt idler No. 1 with the pivot bolt.
Torque: 34 N·m (347 kgf·cm, 25 ft·lbf)

89. INSTALL TIMING BELT

(a) Remove any oil or water on the pulleys, and keep them clean.

NOTICE:

- **If there is a trace of water and/or oil on the timing belt, repair the leakage and install a new timing belt.**
- **Only wipe the pulleys. Do not use cleaning agents on the pulleys.**

(b) Inspect the idler pulleys.
(1) Check that the idler pulley turns smoothly.
(2) Visually check the sealed portion of the idler pulley for oil leakage.

(c) Inspect the water pump.
(1) Turn the pulley, and check that the water pump bearing moves smoothly without any noise.
(2) Visually check the drain hole for coolant leakage.

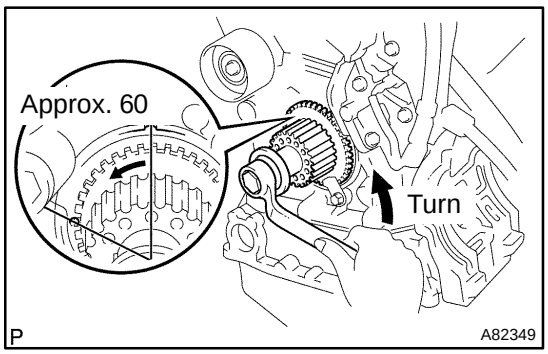

(d) Temporarily install the crankshaft pulley bolt and washer to the crankshaft.

(e) Turn the crankshaft counterclockwise by approximately 60 .

NOTICE:

To prevent contacting the piston head and the valve head from colliding, set the crankshaft pulley at approximately 60 BTDC/compression position.

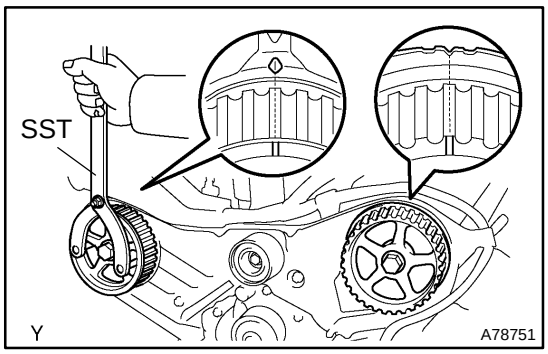

(f) Using SST, turn the crankshaft pulley, and align the timing marks of the timing pulley with the No. 3 timing belt cover.
SST 09960−10010 (09962−01000, 09963−01000)

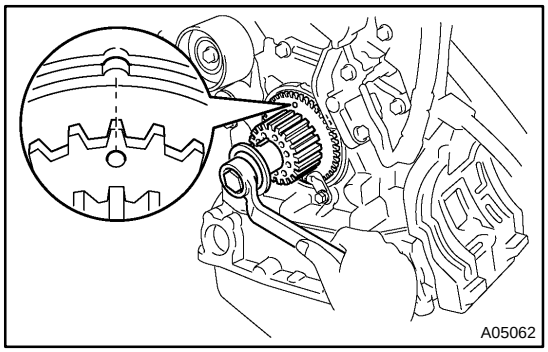

(g) Turn the crankshaft, and align the timing mark of the crankshaft timing pulley with the oil pump body.

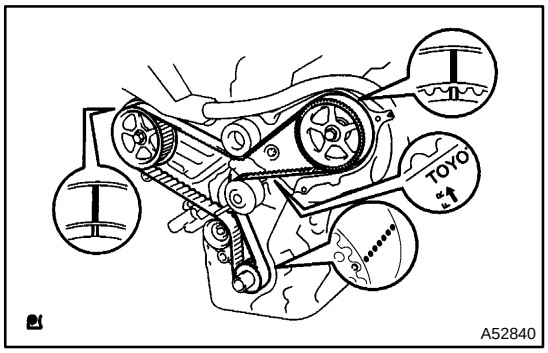

(h) Face the front mark on the timing belt forward.
(i) Align the installation mark on the timing belt with the timing mark of the crankshaft timing pulley.
(j) Align the installation marks on the timing belt with the timing marks of the camshaft timing pulleys.

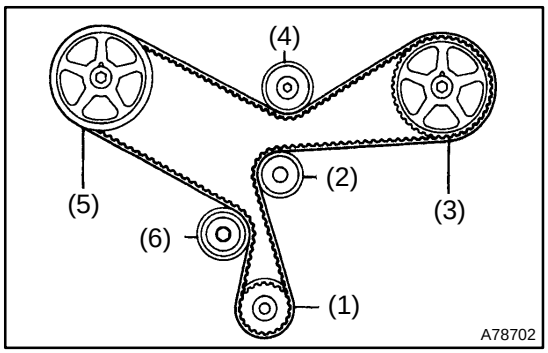

(k) Install the timing belt in this order.

1st	Crankshaft timing pulley
2nd	Water pump pulley
3rd	LH camshaft timing pulley
4th	No. 2 idler pulley
5th	RH camshaft timing pulley
6th	No. 1 idler pulley

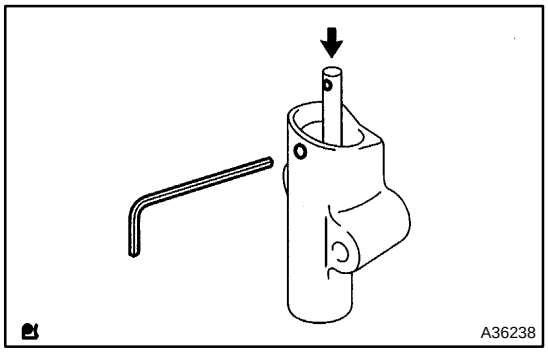

90. INSTALL TIMING BELT TENSIONER ASSY

(a) Set the timing belt tensioner uprightly on the press.
(b) Slowly press in the push rod.

NOTICE:

Do not apply pressure of more than 9.8 kN (1,000 kgf, 2,205 lbf) to the rod.

(c) Align the holes of the push rod and housing, pass a 1.5 mm hexagon wrench through the holes to keep the setting position of the push rod.
(d) Release the press.

(e) Temporarily install the tensioner with the 2 bolts.
Torque: 27 N·m (280 kgf·cm, 20 ft·lbf)

NOTICE:
Install the tensioner's bolts uniformly and evenly. Installing the tenioner at an angle may cause it to malfunction.

(f) Remove the 1.5 mm hexagon wrench from the tensioner.

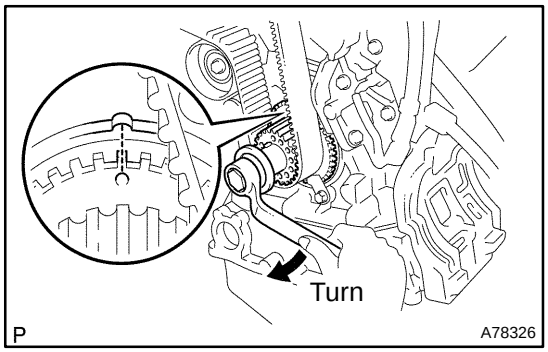

(g) Turn the crankshaft 2 revolutions slowly, and align the timing mark of the crankshaft timing pulley with the oil pump body.

NOTICE:
Always turn the crankshaft clockwise.

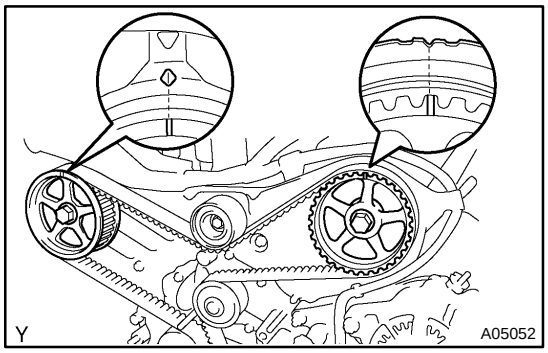

(h) Check that the timing marks of the RH and LH timing pulleys are aligned with the timing marks of the No. 3 timing belt cover as shown in the illustration.

If the marks do not align, remove the timing belt and reinstall it.

(i) Remove the crankshaft pulley bolt.

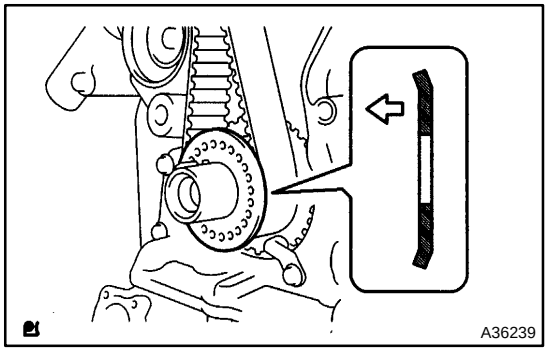

91. INSTALL TIMING BELT GUIDE NO.2

(a) Install the timing belt guide, facing the cup side toward the engine front.

92. INSTALL ENGINE MOUNTING BRACKET RH
Torque: 28 N·m (286 kgf·cm, 21 ft·lbf)

93. INSTALL TIMING BELT NO.2 COVER

(a) Visually check for cracks and breaks on the gasket of the timing belt cover.

If there is a trace that water is entering at the visual check, replace the timing belt cover.

(b) Install the timing belt cover.
Torque: 8.5 N·m (87 kgf·cm, 75 in.·lbf)

94. INSTALL TIMING BELT NO.1 COVER

(a) Visually check for cracks and breaks on the gasket of the timing belt cover.

If there is a trace that water is entering at the visual check, replace the timing belt cover.

(b) Install the timing belt cover.
Torque: 8.5 N·m (87 kgf·cm, 75 in.·lbf)

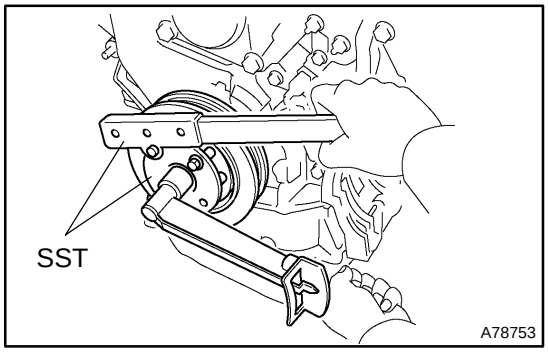

95. INSTALL CRANKSHAFT PULLEY
(a) Align the keyway of the pulley with the key located on the crankshaft and slide the pulley into place.
(b) Using SST, install the pulley bolt.
SST 09213−54015 (91651−60855), 09330−00021
Torque: 220 N·m (2,250 kgf·cm, 162 ft·lbf)

96. INSTALL VVT SENSOR
Torque: 8.0 N·m (82 kgf·cm, 71 in.·lbf)
97. INSTALL CAMSHAFT TIMING OIL CONTROL VALVE ASSY
Torque: 8.0 N·m (82 kgf·cm, 71 in.·lbf)
98. INSTALL ENGINE HANGER NO.2
Torque: 20 N·m (204 kgf·cm, 15 ft·lbf)
99. INSPECT VALVE CLEARANCE (See page 14−142)
100. ADJUST VALVE CLEARANCE (See page 14−142)

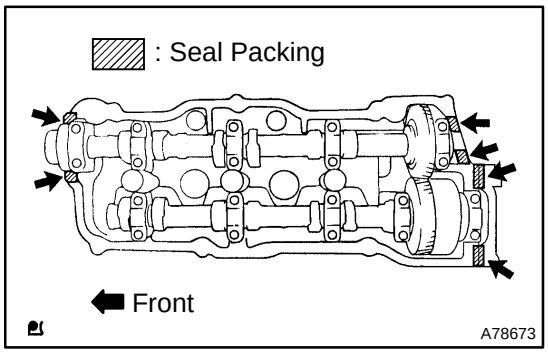

101. INSTALL CYLINDER HEAD COVER SUB−ASSY
(a) Install the gasket to the cylinder head cover.
(b) Apply seal packing to the cylinder head as shown in the illustration.
Seal packing: Part No. 08826−00080 or equivalent
NOTICE:
- **Remove any oil from the contact surface.**
- **Install the cylinder head cover within 3 minutes after applying seal packing.**
- **Do not start the engine for at least 2 hours after installing.**

(c) Install the cylinder head cover with the 9 bolts. Tighten the bolts uniformly in several steps.
Torque: 8.0 N·m (80 kgf·cm, 71 in.·lbf)

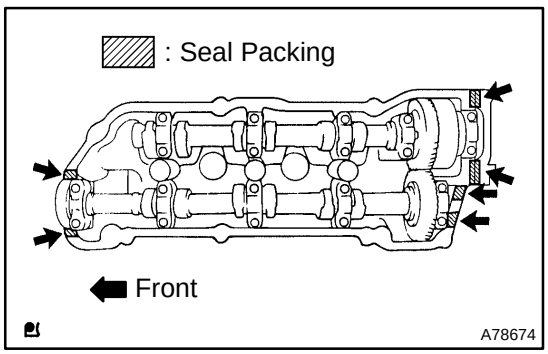

102. INSTALL CYLINDER HEAD COVER SUB−ASSY LH
(a) Install the gasket to the cylinder head cover.
(b) Apply seal packing to the cylinder head as shown in the illustration.
Seal packing: Part No. 08826−00080 or equivalent
NOTICE:
- **Remove any oil from the contact surface.**
- **Install the cylinder head cover within 3 minutes after applying seal packing.**

- **Do not start the engine for at least 2 hours after installing.**

(c) Install the cylinder head cover with the 9 bolts. Tighten the bolts uniformly in several steps.
Torque: 8.0 N·m (80 kgf·cm, 71 in.·lbf)

103. INSTALL VENTILATION VALVE SUB−ASSY

(a) Apply adhesive to 2 or 3 threads.
Adhesive:
Part No. 08833−00070, THREE BOND 1324 or eguivalent

(b) Install the ventilation valve.
Torque: 19 N·m (193 kgf·cm, 14 ft·lbf)

104. INSTALL GASKET, OIL FILLER CAP

105. INSTALL OIL FILLER CAP SUB−ASSY

106. INSTALL SPARK PLUG
Torque: 25 N·m (250 kgf·cm, 18 ft·lbf)

TIMING BELT (1MZ−FE/3MZ−FE)

141II−02

REPLACEMENT

1. REMOVE FRONT WHEEL RH
2. REMOVE FRONT FENDER APRON SEAL RH
3. REMOVE V (COOLER COMPRESSOR TO CRANKSHAFT PULLEY) BELT NO.1 (See page 14−140)
4. REMOVE VANE PUMP V BELT (See page 14−140)
5. REMOVE ENGINE MOVING CONTROL ROD (See page 14−164)
6. REMOVE ENGINE MOUNTING STAY NO.2 RH (See page 14−164)
7. REMOVE GENERATOR BRACKET NO.2

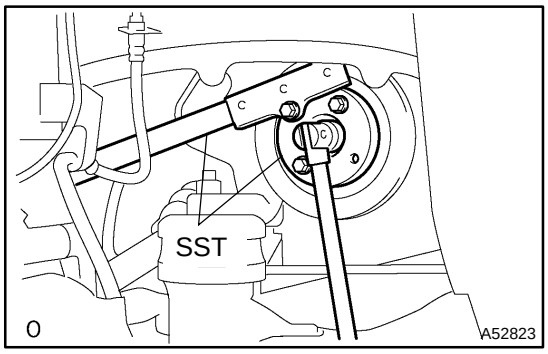

8. REMOVE CRANKSHAFT PULLEY

(a) Using SST, loosen the pulley bolt.
SST 09213−54015 (91651−60855), 09330−00021

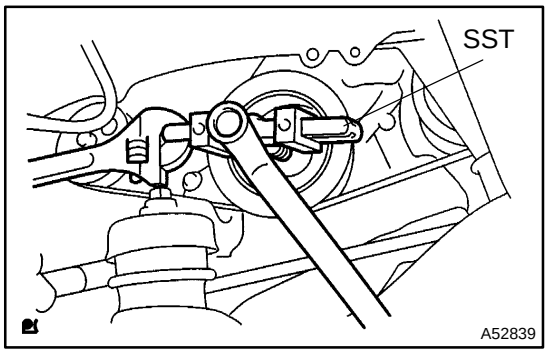

(b) Using SST and the pulley bolt, remove the pulley.
SST 09950−50013 (09951−05010, 09952−05010, 09953−05010, 09954−05030)

NOTICE:
Before using SST, apply lubricating oil on the threads and tip of the center bolt 100.

9. REMOVE TIMING BELT NO.1 COVER

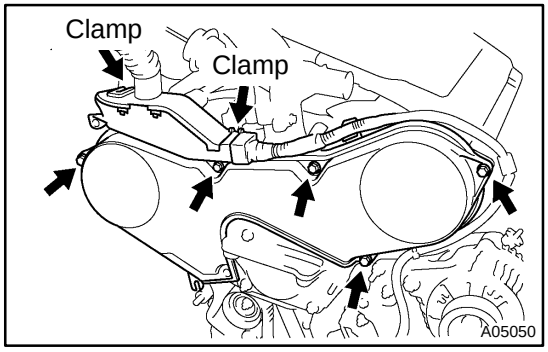

10. REMOVE TIMING BELT NO.2 COVER

(a) Disconnect the engine wire protector clamps from the timing belt No. 3 cover.
(b) Remove the 5 bolts and timing belt cover.

11. REMOVE ENGINE MOUNTING BRACKET RH

12. REMOVE TIMING BELT GUIDE NO.2

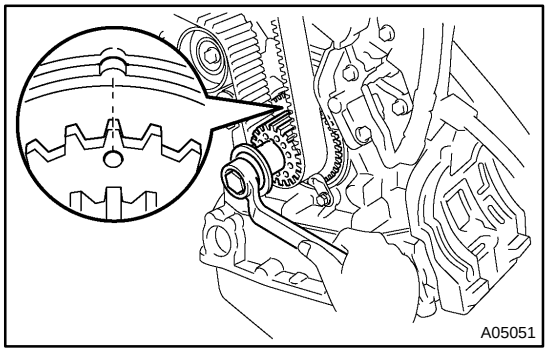

13. REMOVE TIMING BELT

(a) Set the No. 1 cylinder to TDC/compression.

(1) Temporarily install the crankshaft pulley bolt with the washer to the crankshaft.

(2) Turn the crankshaft clockwise, and align the timing marks of the crankshaft timing pulley and oil pump body.

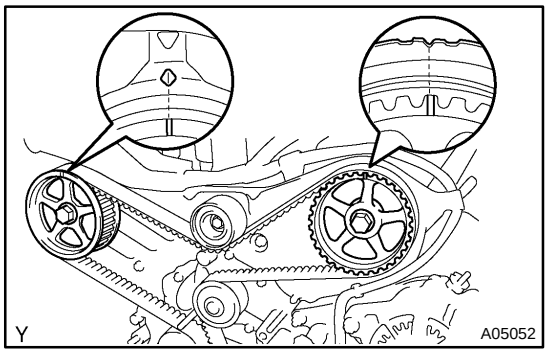

(3) Check that the timing marks of the camshaft timing pulleys and No. 3 timing belt cover are aligned. If not, turn the crankshaft 1 revolution (360●).

(4) Remove the crankshaft pulley bolt.

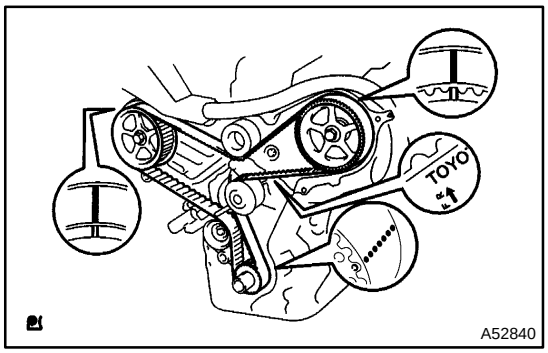

(b) If reusing the timing belt, check that there are 4 installation marks on the timing belt as shown in the illustration.

(1) If the installation marks have disappeared, put new installation marks on the timing belt before removing.

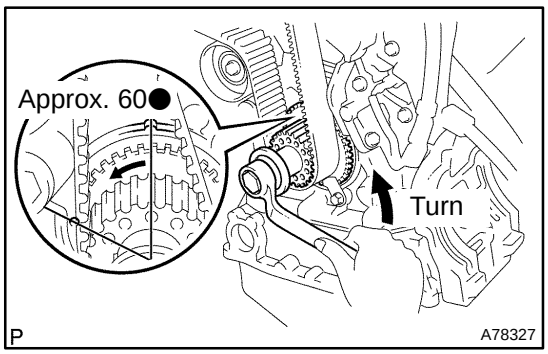

(c) Set the No. 1 cylinder to approximately 60●BTDC/compression.

(1) Turn the crankshaft counterclockwise by approximately 60●

NOTICE:

With timing belt removed:

The crankshaft pulley must be at the correct angle to avoid damage in later steps. If the crankshaft pulley is at the wrong angle and then the camshaft timing pulley and the camshaft are removed, the piston head and valve head may come in contact and be damaged.

(d) Remove the timing belt tensioner.

NOTICE:

Do not reinstall the tensioner with its plunger extended.

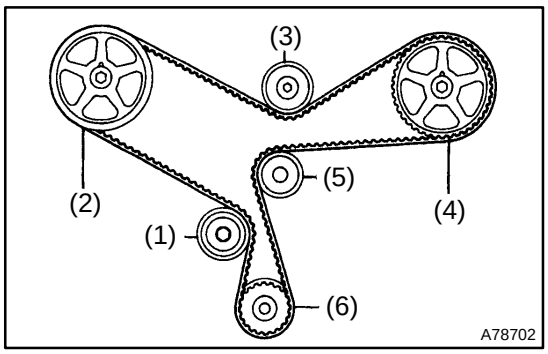

(e) Remove the timing belt in this order.

1st	No. 1 idler pulley
2nd	RH camshaft timing pulley
3rd	No. 2 idler pulley
4th	LH camshaft timing pulley
5th	Water pump pulley
6th	Crankshaft timing pulley

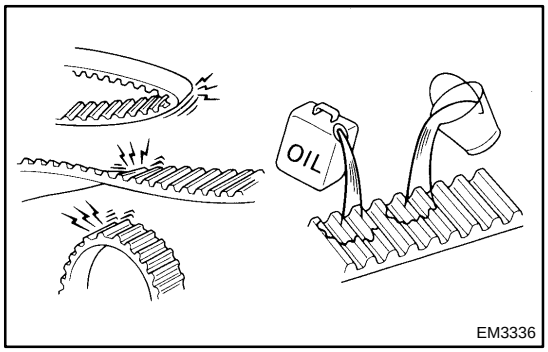

14. INSTALL TIMING BELT

NOTICE:

- **Do not bend, twist or turn the timing belt inside out.**
- **Do not allow the timing belt to come into contact with oil, water or steam.**
- **Do not utilize timing belt tension when instaling the mounting bolt of the camshaft timing pulley.**

(a) Remove any oil or water on the pulleys, and keep them clean.

NOTICE:

- **If there is a trace of water and/or oil on the timing belt, repair the leakage and install a new timing belt.**
- **Only wipe the pulleys. Do not use cleaning agents on the pulleys.**

(b) Inspect the idler pulleys.
  (1) Check that the idler pulleys turn smoothly.
  (2) Visually check the sealed portion of the idler pulleys for oil leakage.

(c) Inspect the water pump.
  (1) Turn the pulley, and check that the water pump bearing moves smoothly without any noise.
  (2) Visually check the drain hole for coolant leakage.

(d) Temporarily install the crankshaft pulley bolt and washer to the crankshaft.

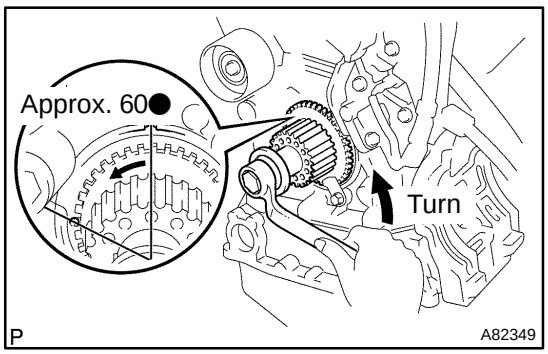

(e) Turn the crankshaft counterclockwise by approximately 60●

NOTICE:

To prevent the piston head and the valve head from colliding, set the crankshaft pulley at approximately 60●BTDC/ compression position.

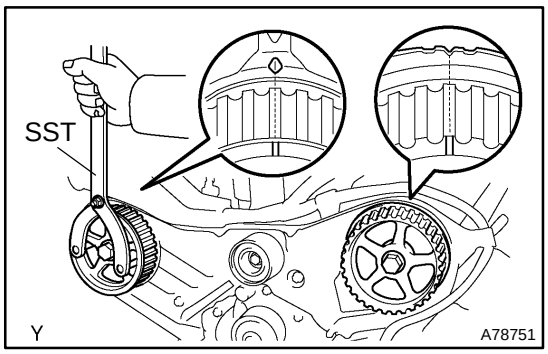

(f) Using SST, turn the timing pulleys, and align the timing marks of the timing pulleys with the No. 3 timing belt cover.
SST 09960−10010 (09962−01000, 09963−01000)

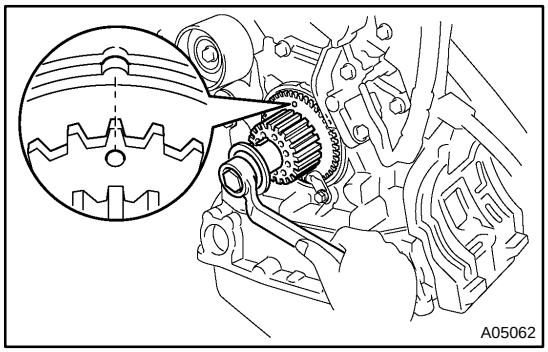

(g) Turn the crankshaft, and align the timing mark of the crankshaft timing pulley with the oil pump body.

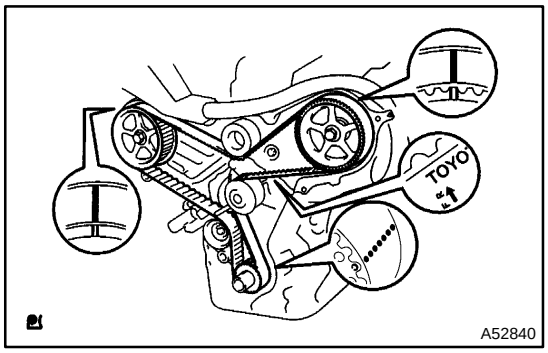

(h) Face the front mark on the timing belt forward.
(i) Align the installation mark on the timing belt with the timing mark of the crankshaft timing pulley.
(j) Align the installation marks on the timing belt with the timing marks of the camshaft timing pulleys.

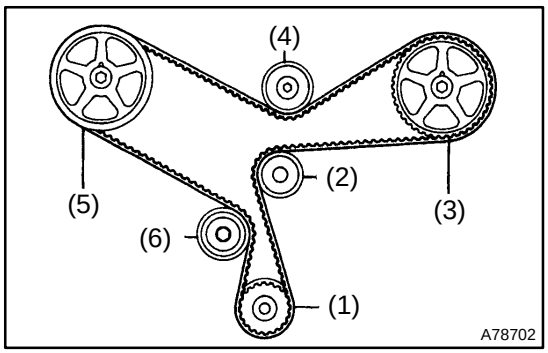

(k) Install the timing belt in this order.

1st	Crankshaft timing pulley
2nd	Water pump pulley
3rd	LH camshaft timing pulley
4th	No. 2 idler pulley
5th	RH camshaft timing pulley
6th	No. 1 idler pulley

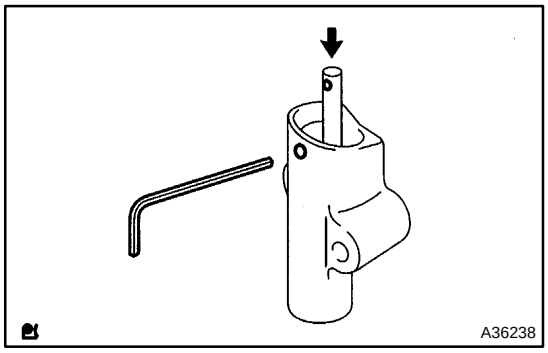

15. INSTALL TIMING BELT TENSIONER ASSY

(a) Set the timing belt tensioner uprightly on the press.
(b) Slowly press in the push rod.

NOTICE:

Do not apply pressure of more than 9.8 kN (1,000 kgf, 2,205 lbf) to the rod.

(c) Align the holes of the push rod and housing, pass a 1.5 mm hexagon wrench through the holes to keep the setting position of the push rod.
(d) Release the push rod.

(e) Temporarily install the tensioner with the 2 bolts.
Torque: 27 N·m (280 kgf·cm, 20 ft·lbf)

NOTICE:
Install the tensioner's bolts uniformly and evenly. Installing the tensioner at an angle may cause it to malfunction.

(f) Remove the 1.5 mm hexagon wrench from the tensioner.

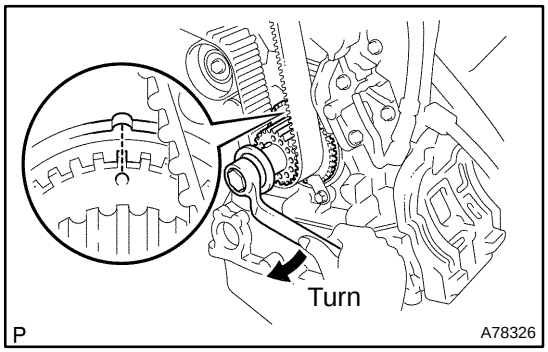

(g) Turn the crankshaft 2 revolutions slowly and align the timing mark of the crankshaft timing pulley with the oil pump body.

NOTICE:
Always turn the crankshaft clockwise.

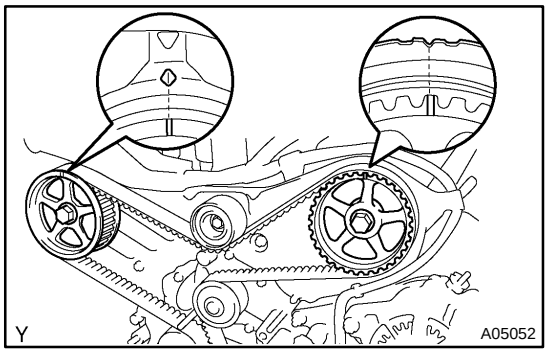

(h) Check that the timing marks of the RH and LH timing pulleys are aligned with the timing marks of the No. 3 timing belt cover as shown in the illustration.

If the marks do not align, remove the timing belt and reinstall it.

(i) Remove the crankshaft pulley bolt.

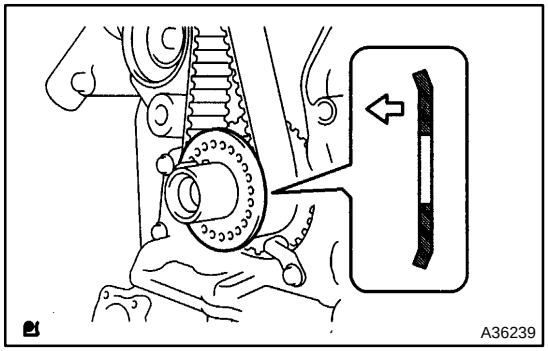

16. INSTALL TIMING BELT GUIDE NO.2

(a) Install the timing belt guide, facing the cup side toward the engine front.

17. INSTALL ENGINE MOUNTING BRACKET RH
Torque: 28 N·m (286 kgf·cm, 21 ft·lbf)

18. INSTALL TIMING BELT NO.2 COVER

(a) Visually check for cracks and breaks on the gasket of the timing belt cover.

HINT:

If it is judged that water is entering at the visual check, replace the timing belt cover.

(b) Install the timing belt cover.
Torque: 8.5 N·m (87 kgf·cm, 76 in.·lbf)

19. INSTALL TIMING BELT NO.1 COVER

(a) Visually check for cracks and breaks on the gasket of the timing belt cover.

HINT:
If there is a trace that water is entering at the visual check, replace the timing belt cover.

(b) Install the timing belt cover.
Torque: 8.5 N·m (87 kgf·cm, 75 in.·lbf)

(c) Install the engine wire protector cover to the timing belt No. 3 cover.

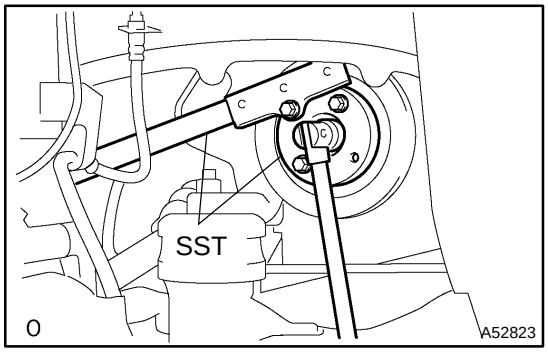

20. INSTALL CRANKSHAFT PULLEY

(a) Align the pulley set key with the key groove of the pulley, and slide on the pulley.

(b) Using SST, install the pulley bolt.
SST 09213−54015 (91651−60855), 09330−00021
Torque: 220 N·m (2250 kgf·cm, 162 ft·lbf)

21. INSTALL GENERATOR BRACKET NO.2
Torque: 28 N·m (286 kgf·cm, 21 ft·lbf)

22. INSTALL ENGINE MOUNTING STAY NO.2 RH (See page 14−164)

23. INSTALL ENGINE MOVING CONTROL ROD (See page 14−164)

24. INSTALL VANE PUMP V BELT (See page 14−140)

25. INSTALL V (COOLER COMPRESSOR TO CRANKSHAFT PULLEY) BELT NO.1 (See page 14−140)

26. INSPECT DRIVE BELT TENSION (See page 14−136)

27. INSTALL FRONT WHEEL RH

CAMSHAFT (RH BANK) (1MZ−FE/3MZ−FE)

141IJ−02

REPLACEMENT

1. DRAIN ENGINE COOLANT (See page 16−27)
2. REMOVE V−BANK COVER SUB−ASSY (See page 14−164)
3. REMOVE FRONT SUSPENSION UPPER BRACE CENTER (W/ FRONT SUSPENSION BRACE UPPER CENTER)
4. REMOVE AIR CLEANER ASSEMBLY WITH HOSE
5. REMOVE INTAKE AIR SURGE TANK (See page 14−142)
6. REMOVE SPARK PLUG
7. REMOVE CYLINDER HEAD COVER SUB−ASSY
8. REMOVE FRONT WHEEL RH
9. REMOVE FRONT FENDER APRON SEAL RH
10. REMOVE V (COOLER COMPRESSOR TO CRANKSHAFT PULLEY) BELT NO.1 (See page 14−140)
11. REMOVE VANE PUMP V BELT (See page 14−140)
12. REMOVE ENGINE MOVING CONTROL ROD (See page 14−164)
13. REMOVE ENGINE MOUNTING STAY NO.2 RH (See page 14−164)
14. REMOVE GENERATOR BRACKET NO.2
15. REMOVE CRANKSHAFT PULLEY (See page 14−186)
16. REMOVE TIMING BELT NO.1 COVER (See page 14−186)
17. REMOVE TIMING BELT NO.2 COVER (See page 14−186)
18. REMOVE ENGINE MOUNTING BRACKET RH
19. REMOVE TIMING BELT GUIDE NO.2 (See page 14−186)
20. REMOVE TIMING BELT (See page 14−186)
21. REMOVE TIMING BELT IDLER SUB−ASSY NO.2

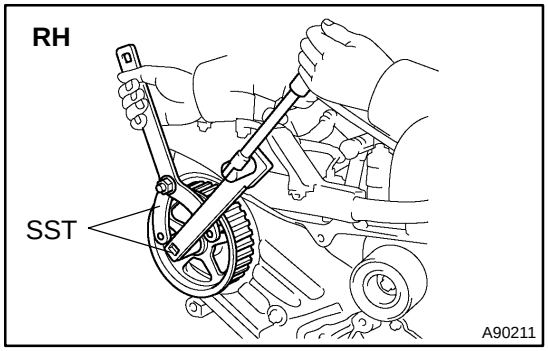

22. REMOVE CAMSHAFT TIMING PULLEY

(a) Using SST, remove the bolt and RH timing pulley.
SST 09960−10010 (09962−01000, 09963−01000), 09249−63010

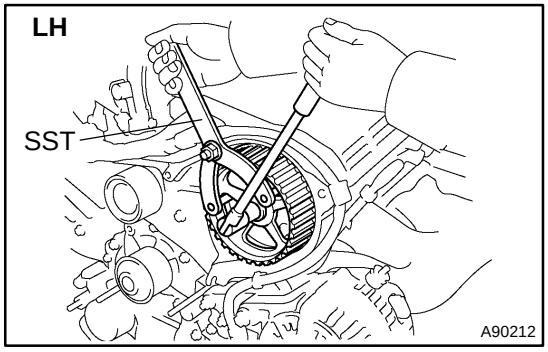

(b) Using SST, remove the LH timing pulley.
SST 09960−10010 (09962−01000, 09963−01000)

HINT:
Arrange the camshaft timing pulleys (RH and LH sides) so that they can be returned to the original locations when reassembling.

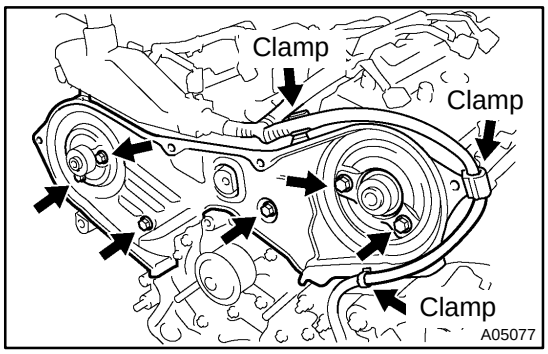

23. REMOVE TIMING BELT NO.3 COVER

(a) Disconnect the 3 engine wire harness clamps from the timing belt No. 3 cover.

(b) Remove the 6 bolts and the timing belt cover.

24. REMOVE CAMSHAFT

NOTICE:

Since the thrust clearance of the camshaft is small, the camshaft must be kept level while it is being removed. If the camshaft is not kept level, damage to the cylinder head or to the camshaft may result. To avoid this, the following steps must be carried out.

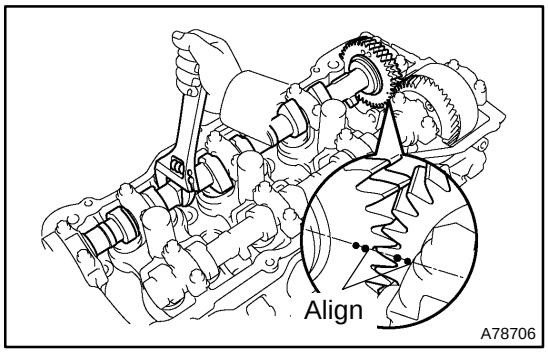

(a) Align the camshaft drive and driven gear's timing marks (2 dot marks each) by turning the camshaft with a wrench.

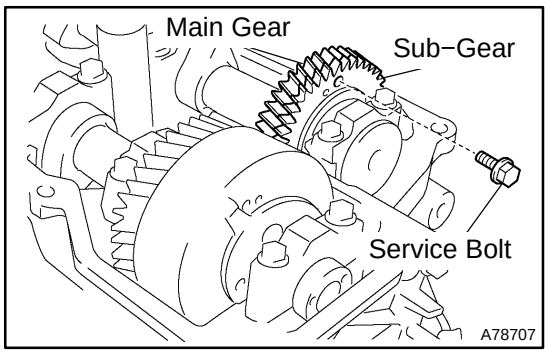

(b) Secure the exhaust camshaft sub−gear to the main gear with a service bolt.

Recommended service bolt:

Thread diameter	6 mm
Thread pitch	1.0 mm
Bolt length	16 to 20 mm

Torque: 5.4 N·m (55 kgf·cm, 48 in.·lbf)

HINT:

When removing the camshaft, make certain that the torsional spring force of the sub−gear has been eliminated by installation of the service bolt.

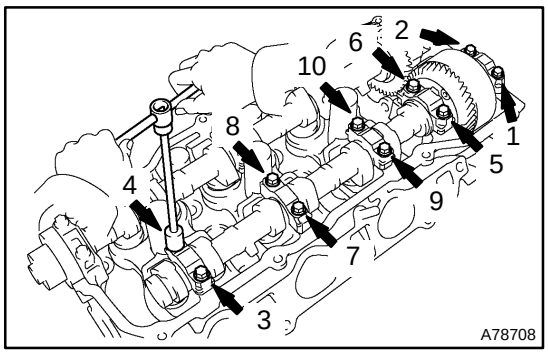

(c) Uniformly loosen and remove the 10 bearing cap bolts in the sequence shown in the illustration. Remove the 5 bearing caps and the camshaft.

NOTICE:

- **Do not pry out the camshaft.**
- **Be careful not to damage the portion of the cylinder head receiving the shaft thrust.**

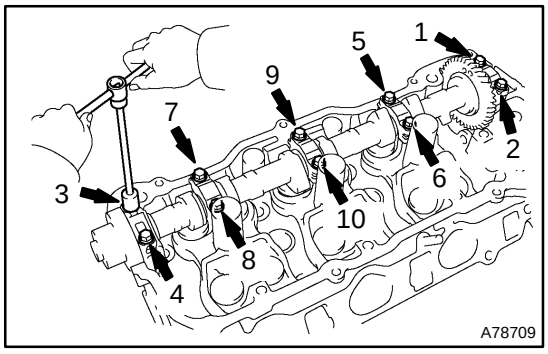

25. REMOVE NO.2 CAMSHAFT

(a) Uniformly loosen and remove the 10 bearing cap bolts in the sequence shown in the illustration. Remove the 5 bearing caps and the No. 2 camshaft.

NOTICE:

- **Do not pry out the camshaft.**
- **Be careful not to damage the portion of the cylinder head receiving the shaft thrust.**

(b) Remove the oil seal from the No. 2 camshaft.

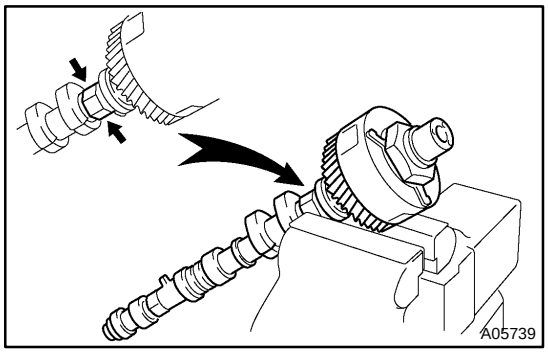

26. REMOVE CAMSHAFT TIMING GEAR ASSY

NOTICE:

Do not remove or install the camshaft timing gear (VVT−i) unless you are replacing the VVT−i or the camshaft.

(a) Clamp the camshaft in a vise on the hexagonal lobe.

NOTICE:

Do not damage the camshaft.

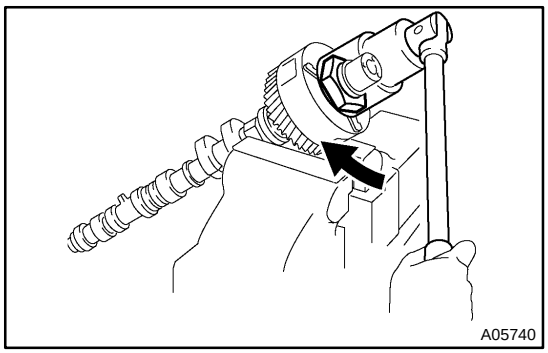

(b) Using a 46 mm socket wrench, remove the lock nut by turning it clockwise.

NOTICE:

- **Remove the locknut with the lock−pin engaged and locked at the extreme retarded angle position.**
- **The lock nut has LH threads.**
- **Only use the socket wrench. Other tools will deform the cam angle rotor.**

(c) Remove the timing gear (VVT−i).

NOTICE:

Never remove the 3 bolts on the gear.

If it is difficult to remove the VVT−i, tap it lightly using a plastic−faced hammer and then remove it.

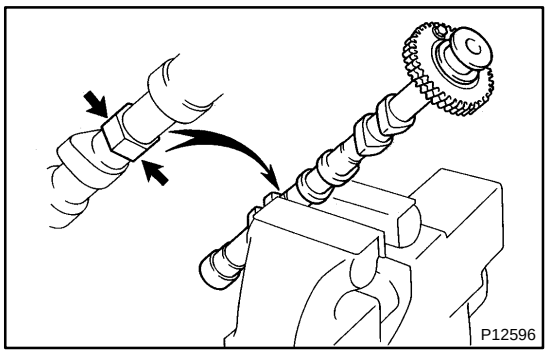

27. REMOVE CAMSHAFT SUB GEAR

(a) Clamp the camshaft in a vise on the hexagonal lobe.

NOTICE:

Do do not damage the camshaft.

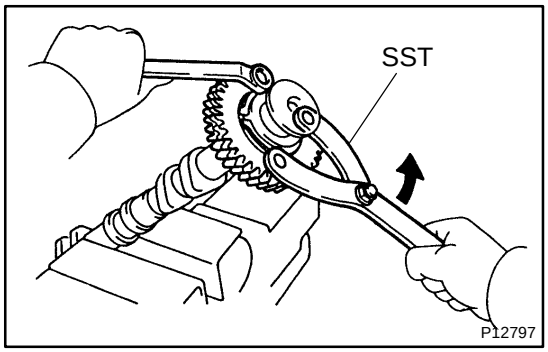

(b) Using SST, turn the sub gear counterclockwise, and remove the service bolt.

SST 09960−10010 (09962−01000, 09963−00500)

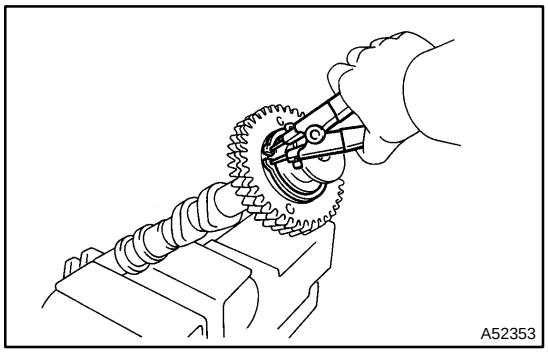

(c) Using snap ring pliers, remove the snap ring.

(d) Remove the wave washer, camshaft sub gear and camshaft gear spring.

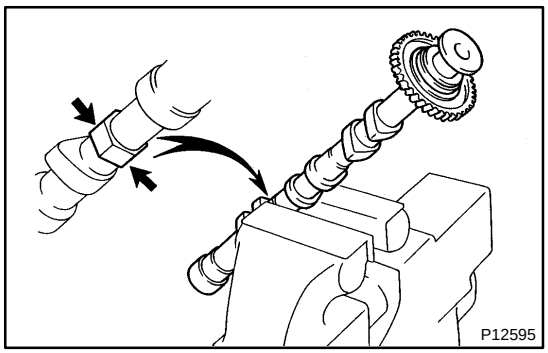

28. INSTALL CAMSHAFT SUB GEAR

(a) Clamp the camshaft in a vise on the hexagonal lobe.

NOTICE:

Do not damage the camshaft.

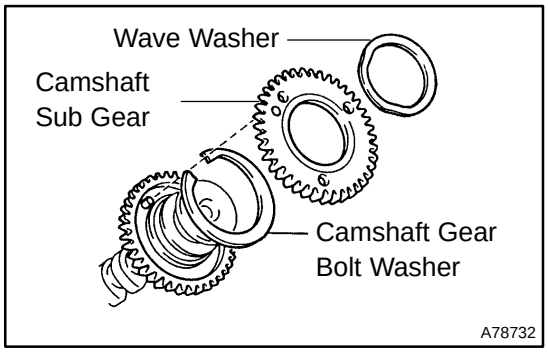

(b) Install the camshaft gear bolt washer and the camshaft sub gear.

HINT:

Attach the pins on the gears to the gear spring ends.

(c) Install the wave washer.

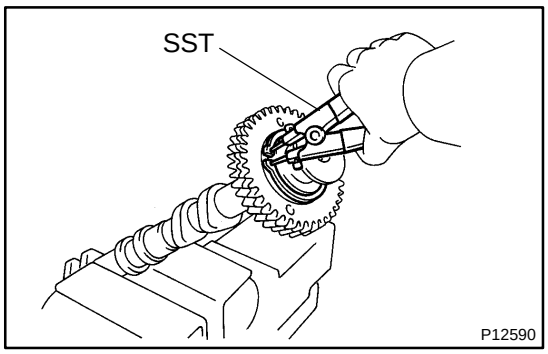

(d) Using snap ring pliers, install the snap ring.

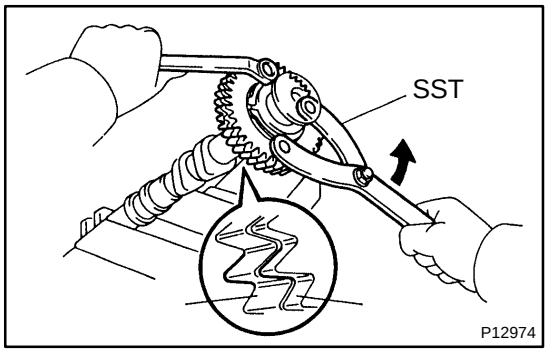

(e) Using SST, align the holes of the camshaft main gear and sub gear by turning the camshaft sub gear counterclockwise, and temporarily install a service bolt.
SST 09960−10010 (09962−01000, 09963−00500)

(f) Align the gear teeth of the main gear and sub gear, and tighten the service bolt.
Torque: 5.4 N·m (55 kgf·cm, 48 in.·lbf)

NOTICE:

Do not damage the camshaft journals.

HINT:

When installing the camshaft, make certain that the torsional spring force of the sub gear has been eliminated by installation of the service bolt.

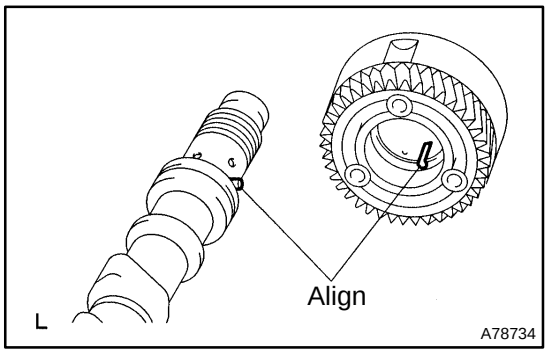

29. INSTALL CAMSHAFT TIMING GEAR ASSY

(a) Align the alignment pin with the alignment pin groove and install the VVT−i on the camshaft.

NOTICE:

Install the VVT−i with the lock−pin engaged and locked at the most retarded angle position.

(b) Apply engine oil on the nut, the mounting surface of the VVT−i and the screw threads.

NOTICE:

- **Be sure to apply the oil, otherwise the specified torque cannot be obtained.**
- **A new nut must be used when replacing the the VVT−i unit.**

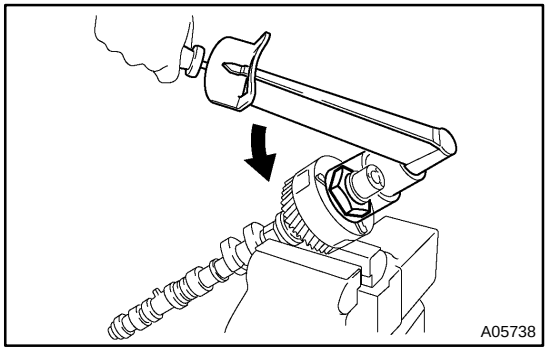

(c) Using a 46 mm socket wrench, install and tighten the lock nut by turning it counterclockwise.
Torque: 150 N·m (1,530 kgf·cm, 111 ft·lbf)

NOTICE:

- **The lock nut has LH threads.**
- **Only use the socket wrench. Other tools will deform the cam angle rotor.**

30. INSTALL NO.2 CAMSHAFT

NOTICE:

Since the thrust clearance of the camshaft is small, the camshaft must be held level while it is being installed. If the camshaft is not level, the portion of the cylinder head receiving the shaft thrust may crack or be damaged, causing the camshaft to seize or break. To avoid this, the following steps must be carried out.

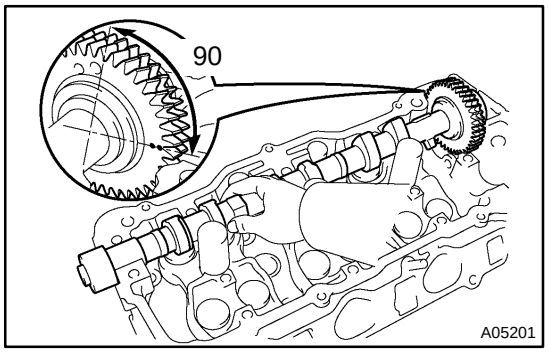

(a) Apply new engine oil to the thrust portion and journal of the camshaft.

(b) Place the No. 2 camshaft at a 90 angle of the timing mark (2 dot marks) on the cylinder head.

(c) Apply MP grease to a new oil seal lip.

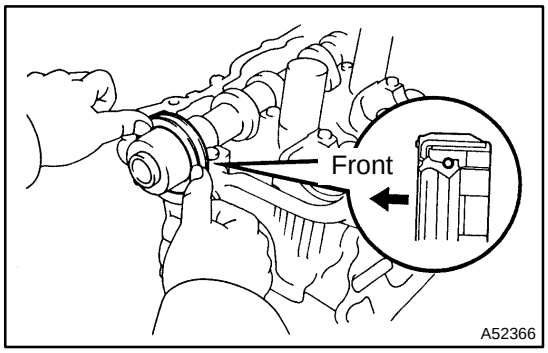

(d) Install the oil seal to the camshaft.

NOTICE:

- **Do not turn over the oil seal lip.**
- **Insert the oil seal until it stops.**

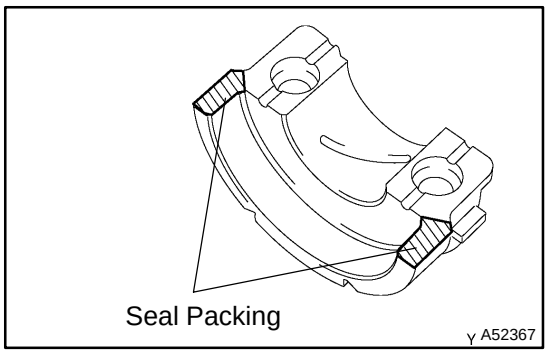

(e) Remove any old packing material from the contact surface.

(f) Apply seal packing to the No. 1 bearing cap as shown in the illustration.

Seal packing: Part No. 08826−00080 or equivalent

NOTICE:

- **Install the No. 1 bearing cap within 5 minutes after applying seal packing.**
- **Do not expose the seal to engine oil for at least 2 hours after installing.**

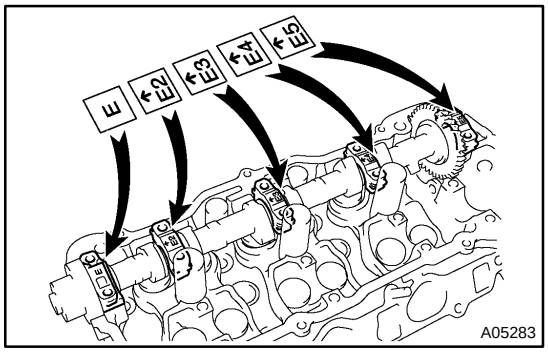

(g) Install the 5 bearing caps in their proper locations.

(h) Apply a light coat of engine oil on the threads of the bearing cap bolts.

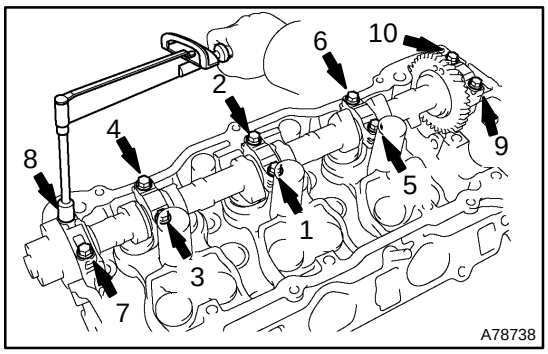

(i) Uniformly tighten the 10 bearing cap bolts in the sequence shown in the illustration.
Torque: 16 N·m (163 kgf·cm, 12 ft·lbf)

31. INSTALL CAMSHAFT

NOTICE:

Since the thrust clearance of the camshaft is small, the camshaft must be held level while it is being installed. If the camshaft is not level, the portion of the cylinder head receiving the shaft thrust may crack or be damaged, causing the camshaft to seize or break. To avoid this, the following steps must be carried out.

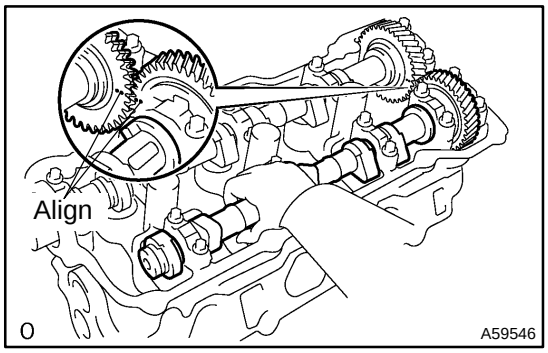

(a) Apply new engine oil to the thrust portion and journal of the camshaft.
(b) Align the camshaft drive and driven gear's timing marks (2 dot marks each).
(c) Place the camshaft on the cylinder head.

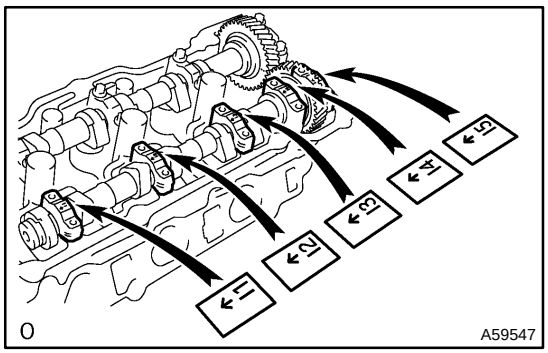

(d) Install the 5 bearing caps in their proper locations.
(e) Apply a light coat of engine oil on the threads of the bearing cap bolts.

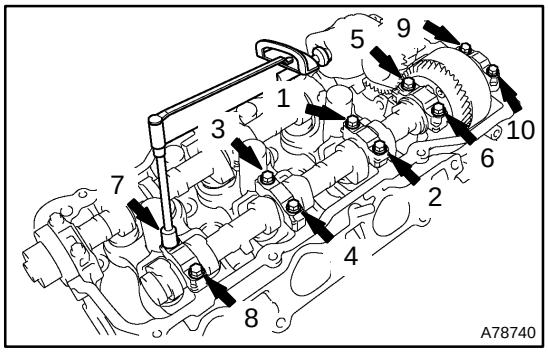

(f) Uniformly tighten the 10 bearing cap bolts in the sequence shown in the illustration.
Torque: 16 N·m (163 kgf·cm, 12 ft·lbf)
(g) Remove the service bolt.

32. INSTALL TIMING BELT NO.3 COVER

(a) Visually check for cracks and breaks in the gasket of the timing belt cover.

HINT:

If water is entering through cracks or breaks in the gasket, repair according to these guidelines: 1) if the crack length is within 2 to 3 cm (0.79 to 1.18 in.), repair with seal packing; or 2) if the crack length is over 3 cm (1.18 in.), replace the gasket.

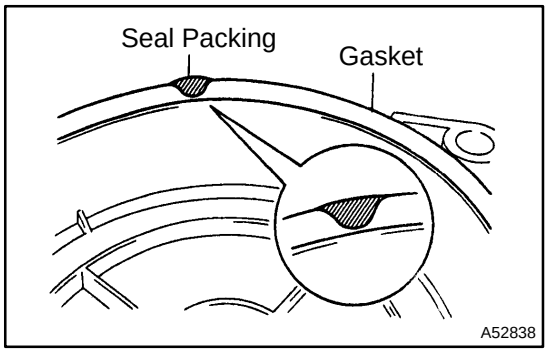

(b) When repairing the timing belt cover gasket, follow the procedure below.

(1) Repair the cracks and breaks by applying the seal packing to the damaged area.

Seal packing: Part No. 08826−00080 or equivalent

NOTICE:

When applying the seal packing, apply it as wide and high as the gasket.

(c) If the timing belt cover gasket needs to be replaced, follow the procedure below.

(1) Using a screwdriver and gasket scraper, remove the remaining gasket.

NOTICE:

Be careful not to damage the timing belt cover.

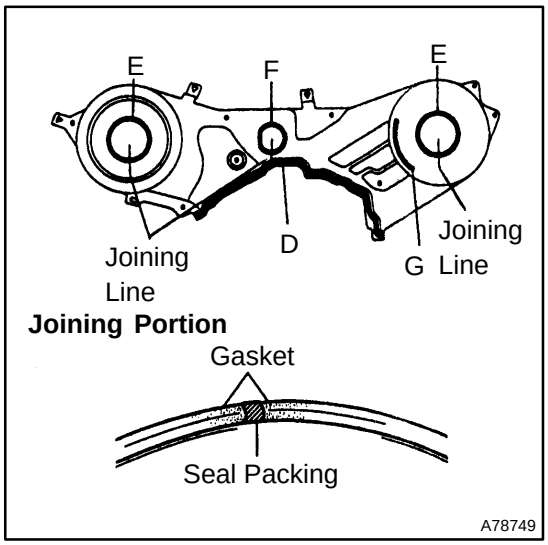

(2) Remove the backing paper from a new gasket, and affix the gasket along the groove of the timing belt cover as shown in the illustration.

NOTICE:

- **Affix the gasket in the center of the groove.**
- **At the corners, try to keep the gasket thickness uniform.**

Length:

Gasket	D	E	F	G
Specified Condition	335 mm (13.19 in.)	180 mm (7.09 in.)	133 mm (5.24 in.)	72 mm (2.83 in.)

(3) If there is a gap on the joint of the gasket, apply seal packing to close the gap.

Seal packing: Part No. 08826−00080 or equivalent

NOTICE:

When applying the seal packing, apply it as wide and high as the gasket.

(d) Install the timing belt cover with the 6 bolts.

Torque: 8.5 N·m (87 kgf·cm, 76 in.·lbf)

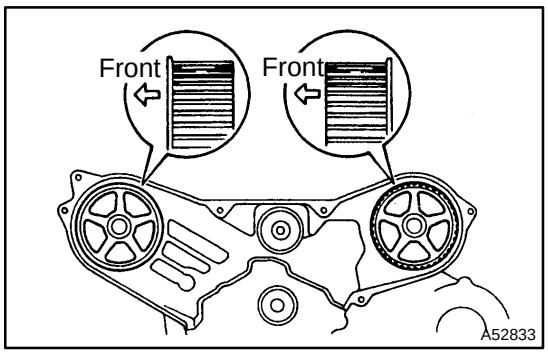

33. INSTALL CAMSHAFT TIMING PULLEY

(a) Install the camshaft timing pulley with the belt guide properly oriented and tighten the bolt temporarily.

HINT:

- Face the belt guide of the RH timing pulley towards the front of the engine.
- Face the belt guide of the LH timing pulley towards the rear of the engine.

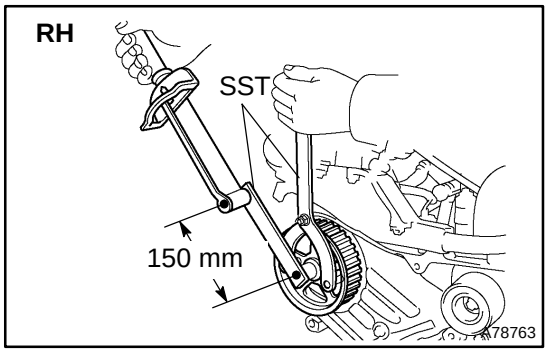

(b) Using SST, tighten the RH pulley bolt.

SST 09960−10010 (09962−01000, 09963−01000), 09249−63010

Torque: 125 N·m (1,275 kgf·cm, 92 ft·lbf)

NOTICE:

The torque specification above is the SST without extension tool specification. Use the special formula to calculate the SST with extension tool torque specification (see page 01−5).

Extended length of SST (09249−63010): 150 mm (5.91 in.)

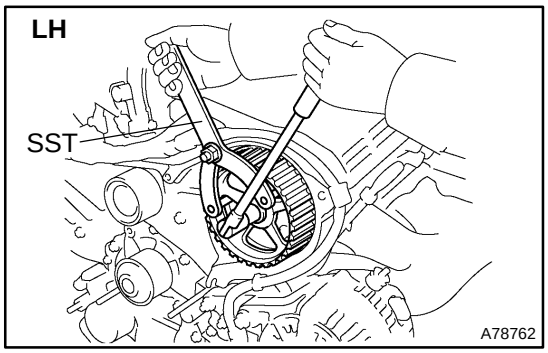

(c) Using SST, tighten the LH pulley bolt.

SST 09960−10010 (09962−01000, 09963−01000)

Torque: 125 N·m (1275 kgf·cm, 92 ft·lbf)

34. INSTALL TIMING BELT IDLER SUB−ASSY NO.2
Torque: 43 N·m (438 kgf·cm, 32 ft·lbf)
35. INSPECT TIMING BELT (See page 14−186)
36. INSTALL TIMING BELT (See page 14−186)
37. INSTALL TIMING BELT TENSIONER ASSY (See page 14−186)
38. INSTALL TIMING BELT GUIDE NO.2 (See page 14−186)
39. INSTALL ENGINE MOUNTING BRACKET RH
Torque: 28 N·m (286 kgf·cm, 21 ft·lbf)
40. INSTALL TIMING BELT NO.2 COVER (See page 14−186)
41. INSTALL TIMING BELT NO.1 COVER (See page 14−186)
42. INSTALL CRANKSHAFT PULLEY (See page 14−186)
43. INSTALL GENERATOR BRACKET NO.2
Torque: 28 N·m (286 kgf·cm, 21 ft·lbf)
44. INSTALL ENGINE MOUNTING STAY NO.2 RH (See page 14−164)
45. INSTALL ENGINE MOVING CONTROL ROD (See page 14−164)

46. INSPECT VALVE CLEARANCE (See page 14−142)
47. ADJUST VALVE CLEARANCE (See page 14−142)
48. INSTALL VANE PUMP V BELT (See page 14−140)
49. INSTALL V (COOLER COMPRESSOR TO CRANKSHAFT PULLEY) BELT NO.1 (See page 14−140)
50. INSPECT DRIVE BELT TENSION (See page 14−136)
51. INSTALL CYLINDER HEAD COVER SUB−ASSY (See page 14−142)
52. INSTALL SPARK PLUG
    Torque: 8.0 N·m (82 kgf·cm, 71 in.·lbf)
53. INSTALL INTAKE AIR SURGE TANK (See page 14−142)
54. INSTALL AIR CLEANER ASSEMBLY WITH HOSE
55. CONNECT VACUUM HOSES (See page 14−164)
56. INSTALL FRONT SUSPENSION UPPER BRACE CENTER (W/ FRONT SUSPENSION BRACE UPPER CENTER)
    Torque: 80 N·m (816 kgf·cm, 59 ft·lbf)
57. INSTALL V−BANK COVER SUB−ASSY (See page 14−164)
58. INSTALL FRONT WHEEL RH
59. ADD ENGINE COOLANT (See page 16−27)
60. CHECK FOR ENGINE COOLANT LEAKS (See page 16−21)

CAMSHAFT (LH BANK) (1MZ−FE/3MZ−FE)

141IK−02

REPLACEMENT

1. DRAIN ENGINE COOLANT (See page 16−27)
2. REMOVE V−BANK COVER SUB−ASSY (See page 14−164)
3. REMOVE RADIATOR HOSE INLET
4. REMOVE SPARK PLUG
5. REMOVE CYLINDER HEAD COVER SUB−ASSY LH (See page 14−142)
6. REMOVE FRONT WHEEL RH
7. REMOVE FRONT FENDER APRON SEAL RH
8. REMOVE V (COOLER COMPRESSOR TO CRANKSHAFT PULLEY) BELT NO.1 (See page 14−140)
9. REMOVE VANE PUMP V BELT (See page 14−140)
10. REMOVE ENGINE MOVING CONTROL ROD (See page 14−164)
11. REMOVE ENGINE MOUNTING STAY NO.2 RH (See page 14−164)
12. REMOVE GENERATOR BRACKET NO.2
13. REMOVE CRANKSHAFT PULLEY (See page 14−186)
14. REMOVE TIMING BELT NO.1 COVER (See page 14−186)
15. REMOVE TIMING BELT NO.2 COVER (See page 14−186)
16. REMOVE ENGINE MOUNTING BRACKET RH
17. REMOVE TIMING BELT GUIDE NO.2 (See page 14−186)
18. REMOVE TIMING BELT (See page 14−186)
19. REMOVE TIMING BELT IDLER SUB−ASSY NO.2
20. REMOVE CAMSHAFT TIMING PULLEY (See page 14−186)
21. REMOVE TIMING BELT NO.3 COVER (See page 14−186)
22. REMOVE NO.3 CAMSHAFT SUB−ASSY

NOTICE:

Since the thrust clearance of the camshaft is small, the camshaft must be kept level while it is being removed. If the camshaft is not kept level, damage to the cylinder head or to the camshaft may result. To avoid this, the following steps must be carried out.

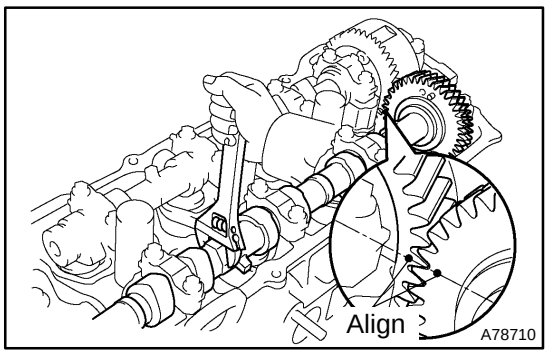

(a) Align the camshaft drive and driven gear’s timing marks (1 dot mark each) by turning the camshaft with a wrench.

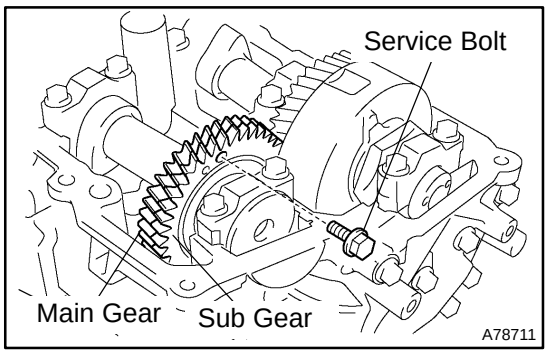

(b) Secure the exhaust camshaft sub gear to the main gear with a service bolt.
Recommended service bolt:

Thread diameter	6 mm
Thread pitch	1 mm
Bolt length	16 to 20 mm

Torque: 5.4 N·m (55 kgf·cm, 48 in.·lbf)

HINT:
When removing the camshaft, make certain that the torsional spring force of the sub gear has been eliminated by installation of the service bolt.

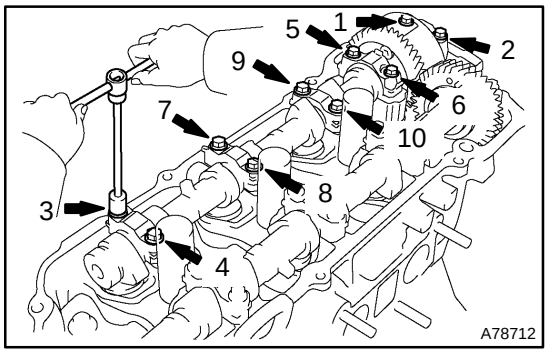

(c) Uniformly loosen and remove the 10 bearing cap bolts in the sequence shown in the illustration. Remove the 5 bearing caps and the No. 3 camshaft.

NOTICE:
- **Do not pry out the camshaft.**
- **Be careful not to damage the portion of the cylinder head receiving the shaft thrust.**

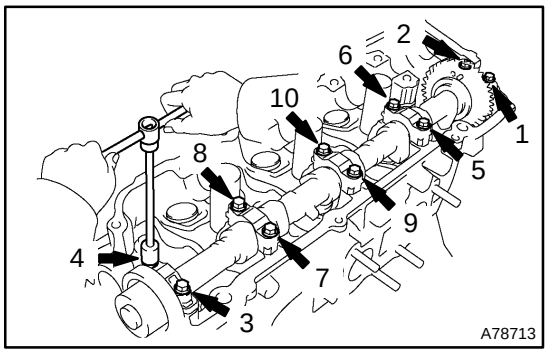

23. REMOVE NO.4 CAMSHAFT SUB−ASSY

(a) Uniformly loosen and remove the 10 bearing cap bolts in the sequence shown in the illustration. Remove the 5 bearing caps and the No. 4 camshaft.

NOTICE:
- **Do not pry out the camshaft.**
- **Be careful not to damage the portion of the cylinder head receiving the shaft thrust.**

(b) Remove the oil seal from the No. 4 camshaft.

24. REMOVE CAMSHAFT TIMING GEAR ASSY (See page 14−186)
25. REMOVE CAMSHAFT SUB GEAR NO.3 (See page 14−186)
26. INSTALL CAMSHAFT SUB GEAR NO.3 (See page 14−186)
27. INSTALL CAMSHAFT TIMING GEAR ASSY (See page 14−186)

28. INSTALL NO.4 CAMSHAFT SUB−ASSY

NOTICE:

Since the thrust clearance of the camshaft is small, the camshaft must be kept level while it is being installed. If the camshaft is not kept level, damage to the cylinder head or to the camshaft may result. To avoid this, the following steps must be carried out.

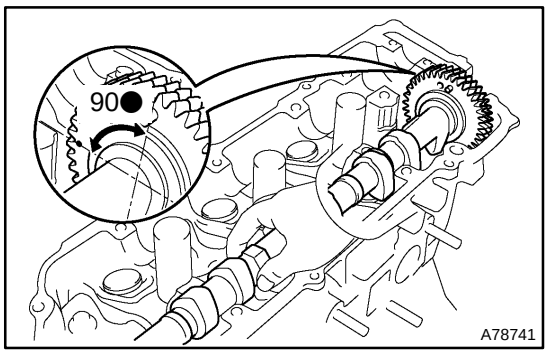

(a) Apply new engine oil to the thrust portion and journal of the camshaft.
(b) Place the No. 4 camshaft at a 90° angle of the timing mark (1 dot marks) on the cylinder head.
(c) Apply MP grease to a new oil seal lip.

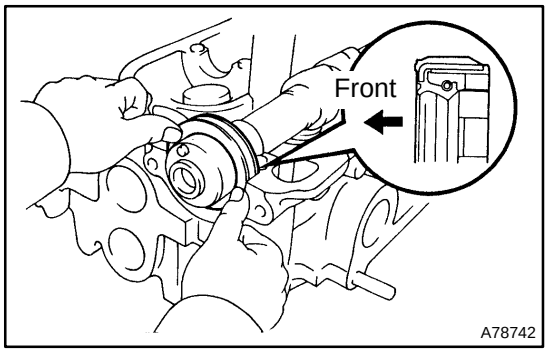

(d) Install the oil seal to the camshaft.

NOTICE:

- **Do not turn over the oil seal lip.**
- **Insert the oil seal until it stops.**

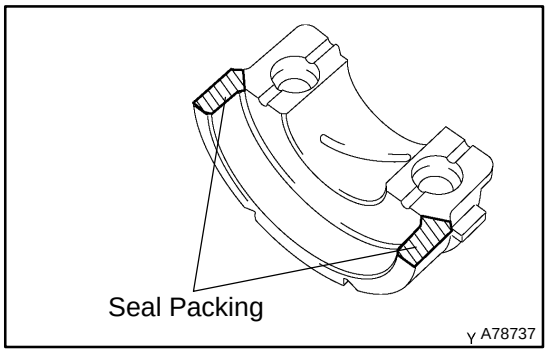

(e) Remove any old packing material from the contact surface.
(f) Apply seal packing to the No. 1 bearing cap as shown in the illustration.
Seal packing: Part No. 08826−00080 or equivalent

NOTICE:

- **Install the No. 1 bearing cap within 5 minutes after applying seal packing.**
- **Do not expose the seal to engine oil for at least 2 hours after installing.**

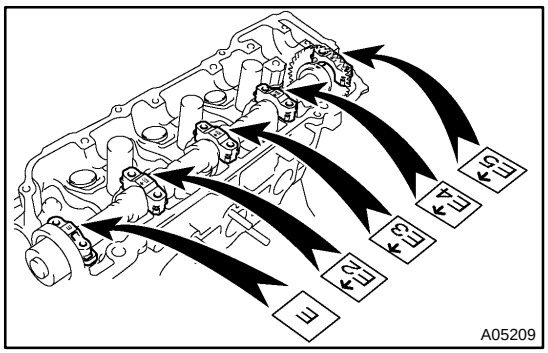

(g) Install the 5 bearing caps in their proper locations.
(h) Apply a light coat of engine oil on the threads of the bearing cap bolts.

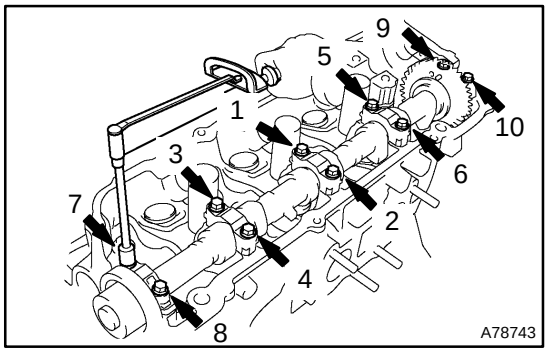

(i) Uniformly install and tighten the 10 bearing cap bolts in the sequence shown in the illustration.
Torque: 16 N·m (163 kgf·cm, 12 ft·lbf)

29. INSTALL NO.3 CAMSHAFT SUB−ASSY

NOTICE:

Since the thrust clearance of the camshaft is small, the camshaft must be kept level while it is being installed. If the camshaft is not kept level, damage to the cylinder head or to the camshaft may result. To avoid this, the following steps must be carried out.

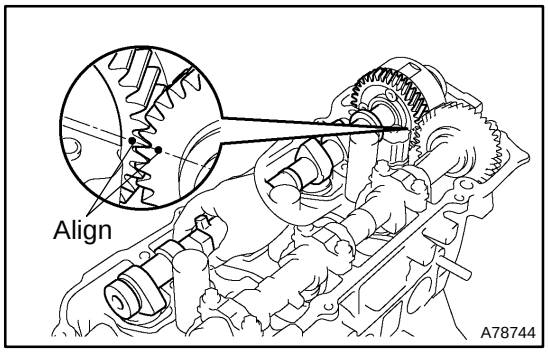

(a) Apply new engine oil to the thrust portion and journal of the camshaft.

(b) Align the camshaft drive and driven gear's timing mark (1 dot mark each).

(c) Place the camshaft on the cylinder head.

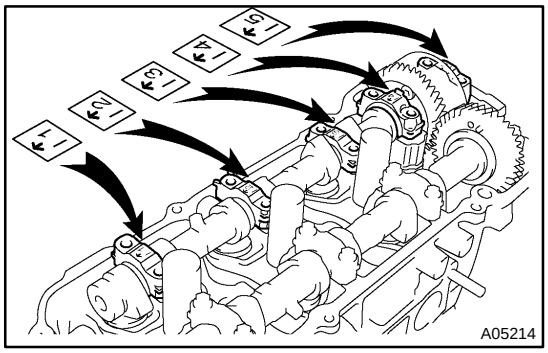

(d) Install the 5 bearing caps in their proper locations.

(e) Apply a light coat of engine oil on the threads of the bearing cap bolts.

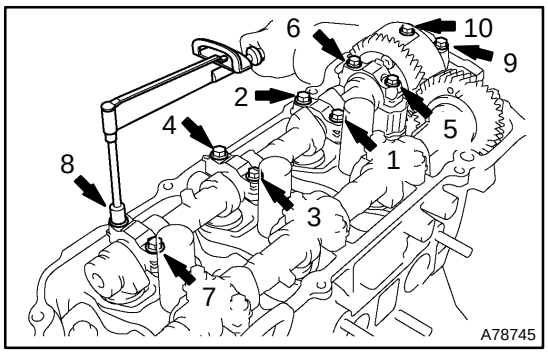

(f) Uniformly install and tighten the 10 bearing cap bolts in the sequence shown in the illustration.
Torque: 16 N·m (163 kgf·cm, 12 ft·lbf)

(g) Remove the service bolt.

30. INSTALL TIMING BELT NO.3 COVER (See page 14−186)

31. INSTALL CAMSHAFT TIMING PULLEY (See page 14−186)

32. INSTALL TIMING BELT IDLER SUB−ASSY NO.2
Torque: 43 N·m (438 kgf·cm, 32 ft·lbf)

33. INSPECT TIMING BELT (See page 14−186)

34. INSTALL TIMING BELT (See page 14−186)

35. INSTALL TIMING BELT TENSIONER ASSY (See page 14−186)

36. INSTALL TIMING BELT GUIDE NO.2 (See page 14−186)

37. INSTALL ENGINE MOUNTING BRACKET RH
Torque: 28 N·m (286 kgf·cm, 21 ft·lbf)

38. INSTALL TIMING BELT NO.2 COVER (See page 14−186)
39. INSTALL TIMING BELT NO.1 COVER (See page 14−186)
40. INSTALL CRANKSHAFT PULLEY (See page 14−186)
41. INSTALL GENERATOR BRACKET NO.2
    Torque: 28 N·m (286 kgf·cm, 21 ft·lbf)
42. INSTALL ENGINE MOUNTING STAY NO.2 RH (See page 14−164)
43. INSTALL ENGINE MOVING CONTROL ROD (See page 14−164)
44. INSPECT VALVE CLEARANCE (See page 14−142)
45. ADJUST VALVE CLEARANCE (See page 14−142)
46. INSTALL VANE PUMP V BELT (See page 14−140)
47. INSTALL V (COOLER COMPRESSOR TO CRANKSHAFT PULLEY) BELT NO.1 (See page 14−140)
48. INSPECT DRIVE BELT TENSION (See page 14−136)
49. INSTALL CYLINDER HEAD COVER SUB−ASSY LH (See page 14−142)
50. INSTALL SPARK PLUG
    Torque: 8.0 N·m (82 kgf·cm, 71 in.·lbf)
51. INSTALL V−BANK COVER SUB−ASSY (See page 14−164)
52. INSTALL FRONT WHEEL RH
    Torque: 103 N·m (1,050 kgf·cm, 76 ft·lbf)
53. ADD ENGINE COOLANT (See page 16−27)
54. CHECK FOR ENGINE COOLANT LEAKS (See page 16−21)

CYLINDER HEAD GASKET (1MZ−FE/3MZ−FE)

141IL−02

REPLACEMENT

1. **WORK FOR PREVENTING GASOLINE FROM SPILLING OUT (See page 11−26)**
2. **DRAIN ENGINE COOLANT (See page 16−27)**
3. **DRAIN ENGINE OIL**
4. **REMOVE EXHAUST PIPE NO.1 SUPPORT BRACKET (See page 15−7)**
5. **REMOVE EXHAUST PIPE ASSY FRONT (See page 15−7)**
6. **REMOVE EXHAUST MANIFOLD SUB−ASSY RH (See page 14−164)**
7. **REMOVE V−BANK COVER SUB−ASSY (See page 14−164)**
8. **REMOVE FRONT SUSPENSION UPPER BRACE CENTER (W/ FRONT SUSPENSION BRACE UPPER CENTER)**
9. **REMOVE AIR CLEANER ASSEMBLY WITH HOSE**
10. **REMOVE INTAKE AIR SURGE TANK (See page 14−142)**
11. **DISCONNECT FUEL PIPE SUB−ASSY NO.1 (See page 11−26)**

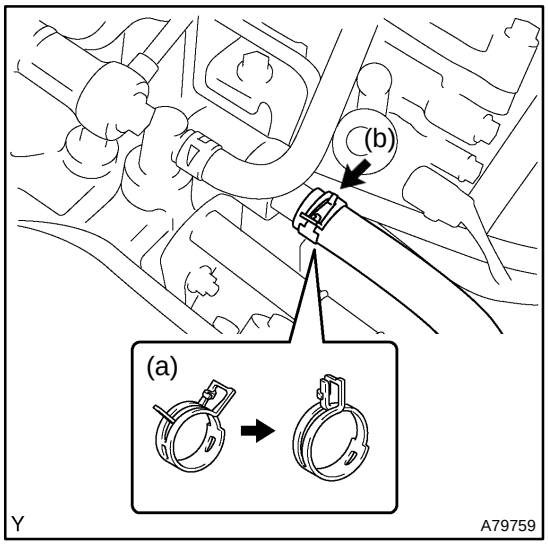

12. DISCONNECT HEATER INLET WATER HOSE

(a) Lock the hose clamp as shown in the illustration.

(b) Disconnect the heater inlet water hose.

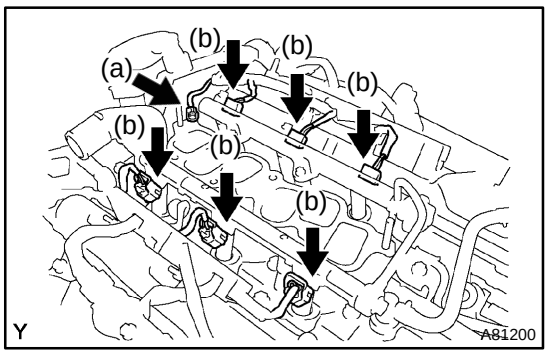

13. REMOVE INTAKE MANIFOLD

(a) Remove the nut and disconnect the ground cable.

(b) Disconnect the 6 fuel injector connectors.

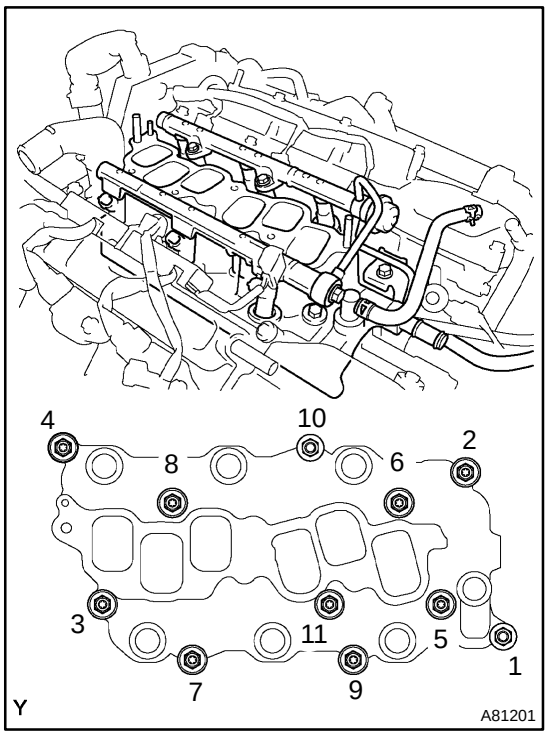

(c) Uniformly loosen and remove the intake manifold's 9 bolts and 2 nuts in the sequence shown in the illustration. Remove the intake manifold.

14. DISCONNECT RADIATOR HOSE INLET

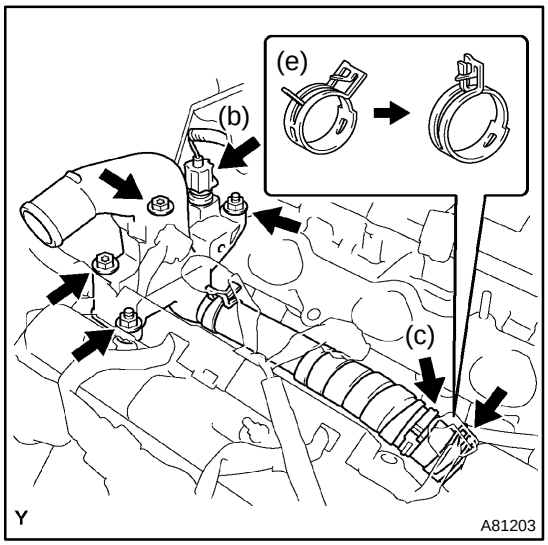

15. REMOVE WATER OUTLET

(a) Disconnect the radiator hose inlet.
(b) Disconnect the engine coolant temperature sensor connector.
(c) Remove the clamp.
(d) Remove the 2 bolts, 2 nuts and 2 washers.
(e) Lock the hose clamp as shown in the illustration and remove the water outlet together with the water by−pass hose No. 1.
(f) Remove the 2 gaskets from the 2 cylinder heads.

16. REMOVE FRONT WHEEL RH
17. REMOVE FRONT FENDER APRON SEAL RH
18. REMOVE V (COOLER COMPRESSOR TO CRANKSHAFT PULLEY) BELT NO.1 (See page 14−140)
19. REMOVE VANE PUMP V BELT (See page 14−140)
20. REMOVE ENGINE MOVING CONTROL ROD (See page 14−164)
21. REMOVE ENGINE MOUNTING STAY NO.2 RH (See page 14−164)
22. REMOVE GENERATOR BRACKET NO.2
23. REMOVE CRANKSHAFT PULLEY (See page 14−186)
24. REMOVE TIMING BELT NO.1 COVER (See page 14−186)

25. **REMOVE TIMING BELT NO.2 COVER (See page 14−186)**
26. **REMOVE ENGINE MOUNTING BRACKET RH**
27. **REMOVE TIMING BELT GUIDE NO.2**
28. **REMOVE TIMING BELT (See page 14−186)**
29. **REMOVE TIMING BELT IDLER SUB−ASSY NO.2**
30. **REMOVE CAMSHAFT TIMING PULLEY (See page 14−186)**
31. **REMOVE TIMING BELT NO.3 COVER (See page 14−186)**
32. **REMOVE VANE PUMP ASSY (See page 51−17)**
33. **REMOVE IGNITION COIL ASSY**
34. **REMOVE CYLINDER HEAD COVER SUB−ASSY (See page 14−186)**
35. **REMOVE CAMSHAFT (See page 14−186)**
36. **REMOVE NO.2 CAMSHAFT (See page 14−186)**

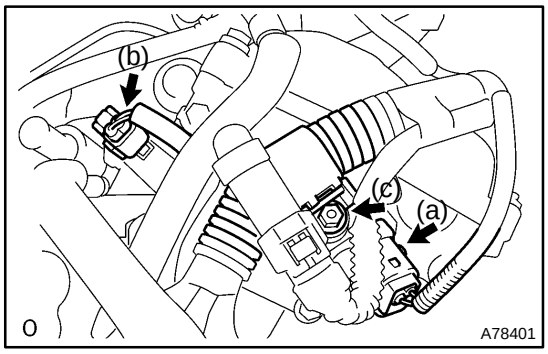

37. **REMOVE CYLINDER HEAD SUB−ASSY**

(a) Disconnect the VVT sensor connector.

(b) Disconnect the camshaft timing oil control valve connector.

(c) Remove the nut and disconnect the engine wire harness clamp.

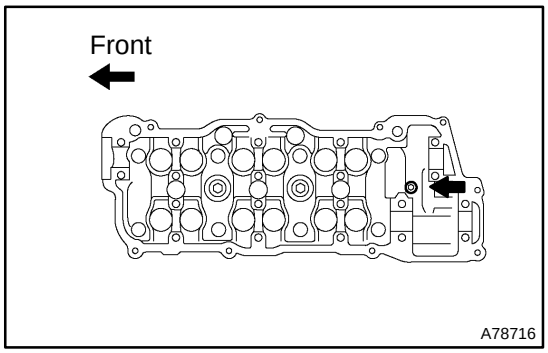

(d) Using a socket hexagon wrench 8, remove the hexagon bolt.

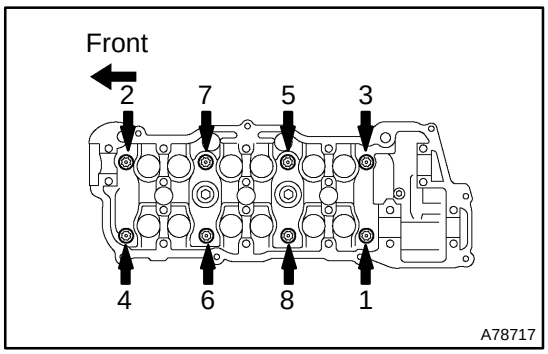

(e) Uniformly loosen the 8 cylinder head bolts in the sequence shown in the illustration. Remove the 8 cylinder head bolts and plate washers.

NOTICE:

- **Be careful not to drop the washers into the cylinder head.**
- **Head warpage or cracking could result from removing bolts in an incorrect order.**

38. **REMOVE CYLINDER HEAD GASKET**

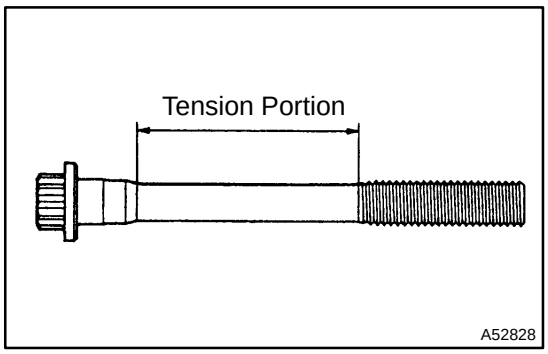

39. INSPECT CYLINDER HEAD SET BOLT

(a) Using a vernier caliper, measure the tension portion diameter of the bolt.

Specified outside diameter:
8.75 to 9.05 mm (0.3445 to 0.3563 in.)

If the diameter is less than the minimum, replace the bolt.

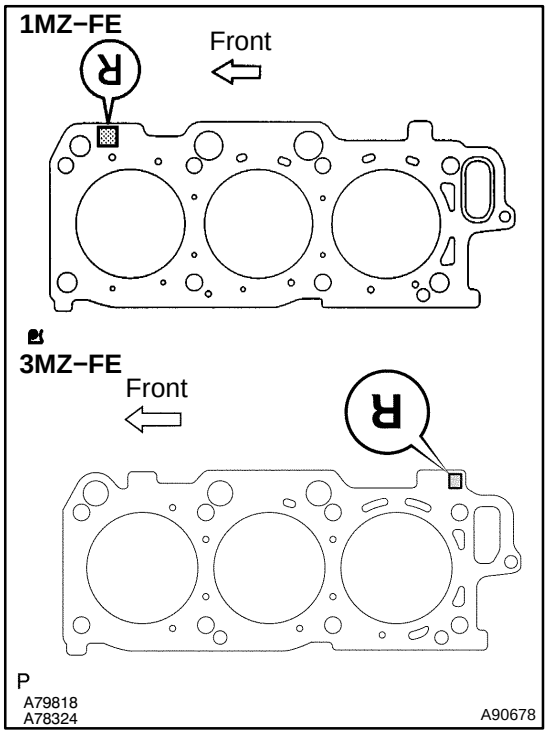

40. INSTALL CYLINDER HEAD GASKET

(a) Place a new cylinder head gasket on the cylinder block with the R mark upside down, as shown in the illustration.

NOTICE:

- **Remove any oil from the contact surface.**
- **Be careful of the installation direction.**
- **To avoid damage to the gasket, place the cylinder head on the gasket carefully.**

41. INSTALL CYLINDER HEAD SUB−ASSY

NOTICE:

The cylinder head bolts are tightened in 2 successive steps.

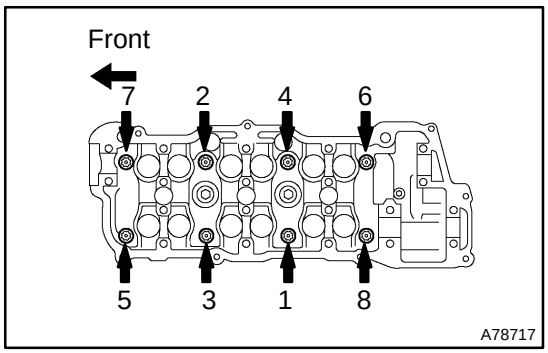

(a) Apply a light coat of engine oil on the threads of the cylinder head bolts.

(b) Install the plate washers to the cylinder head bolts.

(c) Uniformly install and tighten the 8 cylinder head bolts in the sequence shown in the illustration.

Torque: 54 N·m (550 kgf·cm, 40 ft·lbf)

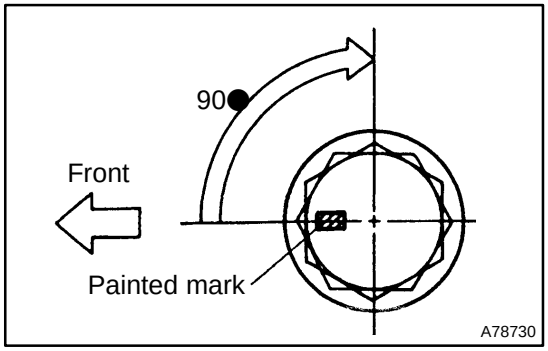

(d) Mark the front side of each cylinder head bolt head with paint as shown in the illustration.

(e) Retighten the cylinder head bolts by 90° in the same sequence as step (c).

(f) Check that each painted mark is now at a 90° angle to the front.

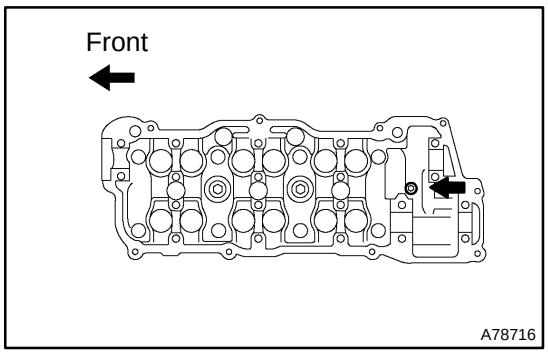

(g) Using a socket hexagon wrench 8, install the hexagon bolt.
Torque: 19 N·m (189 kgf·cm, 14 ft·lbf)
(h) Connect the engine wire harness clamp with the nut.
Torque: 8.4 N·m (85 kgf·cm, 74 in.·lbf)

42. INSTALL NO.2 CAMSHAFT (See page 14−186)
43. INSTALL CAMSHAFT (See page 14−186)
44. INSTALL CYLINDER HEAD COVER SUB−ASSY (See page 14−186)
45. INSTALL IGNITION COIL ASSY
Torque: 8.0 N·m (82 kgf·cm, 71 in.·lbf)
46. INSTALL VANE PUMP ASSY (See page 51−17)
47. INSTALL TIMING BELT NO.3 COVER (See page 14−186)
48. INSTALL CAMSHAFT TIMING PULLEY (See page 14−186)
49. INSTALL TIMING BELT IDLER SUB−ASSY NO.2
Torque: 43 N·m (438 kgf·cm, 32 ft·lbf)
50. INSPECT TIMING BELT (See page 14−186)
51. INSTALL TIMING BELT (See page 14−186)
52. INSTALL TIMING BELT TENSIONER ASSY (See page 14−186)
53. INSTALL TIMING BELT GUIDE NO.2 (See page 14−186)
54. INSTALL ENGINE MOUNTING BRACKET RH
Torque: 28 N·m (286 kgf·cm, 21 ft·lbf)
55. INSTALL TIMING BELT NO.2 COVER (See page 14−186)
56. INSTALL TIMING BELT NO.1 COVER (See page 14−186)
57. INSTALL CRANKSHAFT PULLEY (See page 14−186)
58. INSTALL GENERATOR BRACKET NO.2
Torque: 28 N·m (286 kgf·cm, 21 ft·lbf)
59. INSTALL ENGINE MOUNTING STAY NO.2 RH (See page 14−164)
60. INSTALL ENGINE MOVING CONTROL ROD (See page 14−164)
61. INSTALL VANE PUMP V BELT (See page 14−140)
62. INSTALL V (COOLER COMPRESSOR TO CRANKSHAFT PULLEY) BELT NO.1 (See page 14−140)
63. INSPECT DRIVE BELT TENSION (See page 14−136)
64. INSTALL WATER OUTLET
(a) Install 2 new gaskets to the 2 cylinder heads.
(b) Install the water outlet together the with water by−pass hose No. 1 and unlock the hose clamp.
(c) Tighten the 2 bolts, 2 nuts and 2 washers.
Torque: 15 N·m (153 kgf·cm, 11 ft·lbf)
(d) Install the clamp.
(e) Connect the engine coolant temperature sensor connector.
(f) Connect the radiator hose inlet.

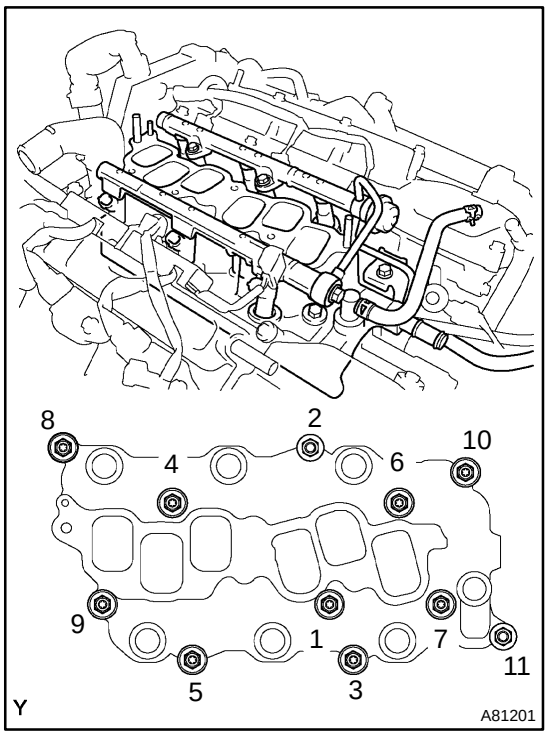

65. INSTALL INTAKE MANIFOLD

(a) Install the intake manifold with the 9 bolts, 2 nuts and 2 washers. Uniformly tighten the bolts and nuts in the sequence shown in the illustration.
Torque: 15 N·m (153 kgf·cm, 11 ft·lbf)

(b) Retighten the water outlet mounting bolts and nuts.
Torque: 15 N·m (153 kgf·cm, 11 ft·lbf)

(c) Install the ground cable with the nut.
Torque: 8.4 N·m (86 kgf·cm, 74 in.·lbf)

(d) Connect the heater inlet water hose.

66. CONNECT FUEL PIPE SUB−ASSY NO.1 (See page 11−26)
67. INSTALL INTAKE AIR SURGE TANK (See page 14−142)
68. INSTALL AIR CLEANER ASSEMBLY WITH HOSE
69. CONNECT VACUUM HOSES (See page 14−164)
70. INSTALL FRONT SUSPENSION UPPER BRACE CENTER (W/ FRONT SUSPENSION BRACE UPPER CENTER)
Torque: 80 N·m (816 kgf·cm, 59 ft·lbf)
71. INSTALL V−BANK COVER SUB−ASSY (See page 14−164)
72. INSTALL EXHAUST MANIFOLD SUB−ASSY RH (See page 14−164)
73. INSTALL EXHAUST PIPE ASSY FRONT (See page 15−7)
74. INSTALL EXHAUST PIPE NO.1 SUPPORT BRACKET (See page 15−7)
75. INSTALL FRONT WHEEL RH
76. ADD ENGINE OIL
77. ADD ENGINE COOLANT (See page 16−27)
78. CHECK FOR ENGINE OIL LEAKS
79. CHECK FOR ENGINE COOLANT LEAKS (See page 16−21)
80. CHECK FOR FUEL LEAKS (See page 11−29)
81. CHECK FOR EXHAUST GAS LEAKS
82. INSPECT IGNITION TIMING (See page 14−136)
83. INSPECT ENGINE IDLE SPEED (See page 14−136)
84. INSPECT COMPRESSION (See page 14−136)
85. INSPECT CO/HC (See page 14−136)

CYLINDER HEAD GASKET NO.2 (1MZ−FE/3MZ−FE)

141IM−03

REPLACEMENT

1. **WORK FOR PREVENTING GASOLINE FROM SPILLING OUT (See page 11−26)**
2. **DRAIN ENGINE COOLANT (See page 16−27)**
3. **DRAIN ENGINE OIL**
4. **REMOVE MANIFOLD STAY NO.2**
5. **DISCONNECT EXHAUST MANIFOLD CONVERTER SUB−ASSY NO.2**

(a) Remove the 2 nuts, and disconnect the exhaust manifold converter from the front exhaust pipe.

6. **REMOVE V−BANK COVER SUB−ASSY (See page 14−164)**
7. **REMOVE FRONT SUSPENSION UPPER BRACE CENTER (W/ FRONT SUSPENSION BRACE UPPER CENTER)**
8. **REMOVE AIR CLEANER ASSEMBLY WITH HOSE**
9. **REMOVE INTAKE AIR SURGE TANK (See page 14−142)**
10. **DISCONNECT FUEL PIPE SUB−ASSY NO.1 (See page 11−38)**
11. **DISCONNECT HEATER INLET WATER HOSE**
12. **REMOVE INTAKE MANIFOLD (See page 14−239)**
13. **REMOVE RADIATOR HOSE INLET**
14. **REMOVE WATER OUTLET (See page 14−239)**
15. **DISCONNECT RADIATOR HOSE OUTLET**
16. **REMOVE WATER INLET PIPE**
17. **REMOVE OIL LEVEL GAGE SUB−ASSY**
18. **REMOVE OIL LEVEL GAGE GUIDE**
19. **REMOVE FRONT WHEEL RH**
20. **REMOVE FRONT FENDER APRON SEAL RH**
21. **REMOVE V (COOLER COMPRESSOR TO CRANKSHAFT PULLEY) BELT NO.1 (See page 14−140)**
22. **REMOVE VANE PUMP V BELT (See page 14−140)**
23. **REMOVE ENGINE MOVING CONTROL ROD (See page 14−164)**
24. **REMOVE ENGINE MOUNTING STAY NO.2 RH (See page 14−164)**
25. **REMOVE GENERATOR BRACKET NO.2**
26. **REMOVE CRANKSHAFT PULLEY (See page 14−186)**
27. **REMOVE TIMING BELT NO.1 COVER (See page 14−186)**
28. **REMOVE TIMING BELT NO.2 COVER (See page 14−186)**
29. **REMOVE ENGINE MOUNTING BRACKET RH**
30. **REMOVE TIMING BELT GUIDE NO.2 (See page 14−186)**
31. **REMOVE TIMING BELT (See page 14−186)**
32. **REMOVE TIMING BELT IDLER SUB−ASSY NO.2**
33. **REMOVE CAMSHAFT TIMING PULLEY (See page 14−186)**
34. **REMOVE TIMING BELT NO.3 COVER (See page 14−186)**
35. **REMOVE IGNITION COIL ASSY**
36. **REMOVE CYLINDER HEAD COVER SUB−ASSY LH (See page 14−186)**
37. **REMOVE NO.3 CAMSHAFT SUB−ASSY (See page 14−186)**
38. **REMOVE NO.4 CAMSHAFT SUB−ASSY (See page 14−186)**

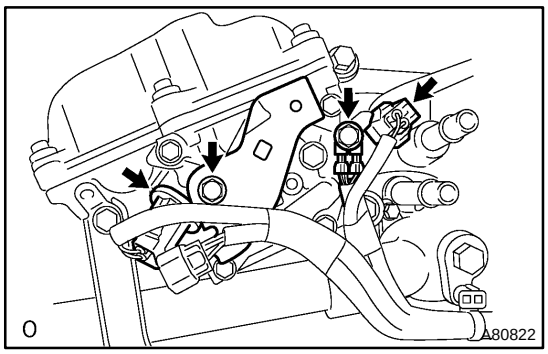

39. REMOVE CYLINDER HEAD LH

(a) Disconnect the VVT sensor connector.

(b) Disconnect the camshaft timing oil control valve connector.

(c) Remove the bolt and disconnect the ground cable.

(d) Remove the bolt and the wire harness clamp bracket.

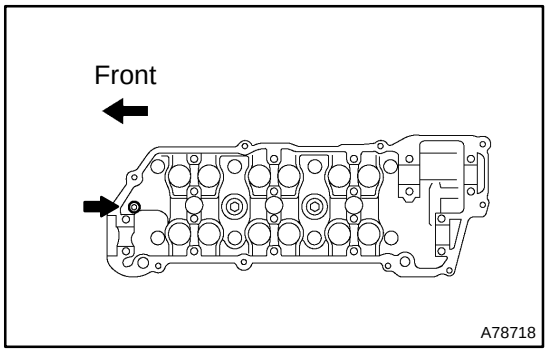

(e) Using a socket hexagon wrench 8, remove the hexagon bolt.

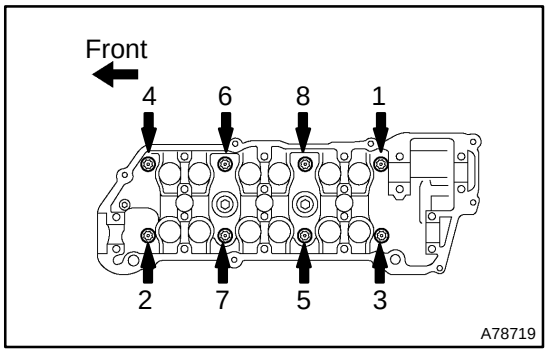

(f) Uniformly loosen the 8 cylinder head bolts in the sequence shown in the illustration. Remove the 8 cylinder head bolts and plate washers.

NOTICE:

- **Be careful not to drop the washers into the cylinder head.**
- **Head warpage or cracking could result from removing bolts in an incorrect order.**

40. REMOVE CYLINDER HEAD GASKET NO.2

41. INSPECT CYLINDER HEAD SET BOLT (See page 14−186)

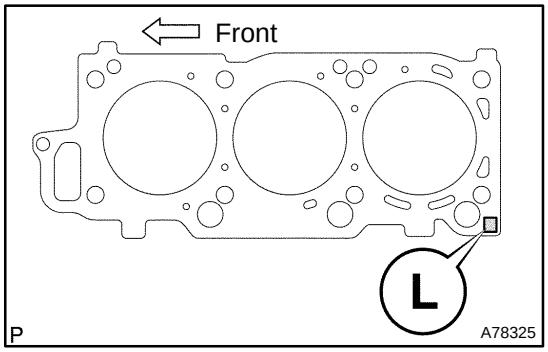

42. INSTALL CYLINDER HEAD GASKET NO.2

(a) Place a new cylinder head gasket on the cylinder block with the L mark as shown in the illustration.

NOTICE:

- **Remove any oil from the contact surface.**
- **Be careful of the installation direction.**
- **To avoid damage to the gasket, place the cylinder head on the gasket carefully.**

43. INSTALL CYLINDER HEAD LH

NOTICE:

The cylinder head bolts are tightened in 2 successive steps.

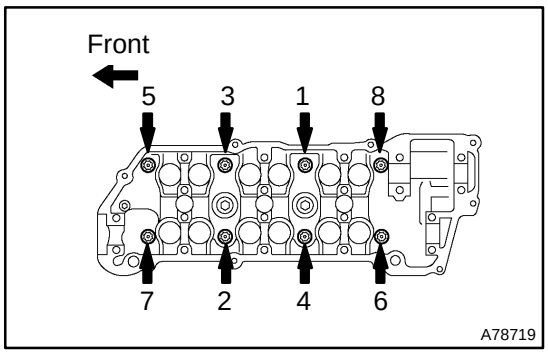

(a) Apply a light coat of engine oil on the threads of the cylinder head bolts.
(b) Install the plate washer to the cylinder head bolt.
(c) Uniformly install and tighten the 8 cylinder head bolts in the sequence shown in the illustration.
Torque: 54 N·m (550 kgf·cm, 40 ft·lbf)

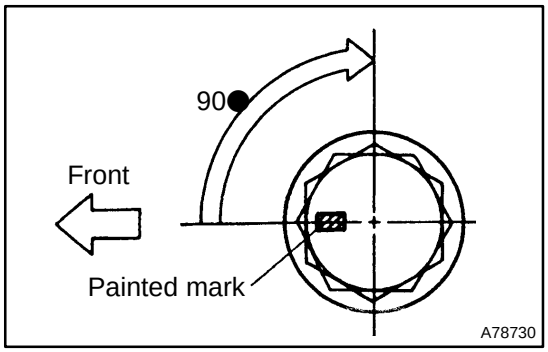

(d) Mark the front side of each cylinder head bolt head with paint as shown in the illustration.
(e) Retighten the cylinder head bolts by 90° in the same sequence as step (c).
(f) Check that each painted mark is now at a 90° angle to the front.

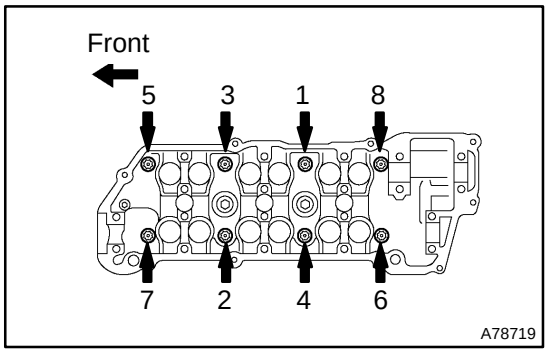

(g) Using a socket hexagon wrench 8, install the hexagon bolt.
Torque: 19 N·m (189 kgf·cm, 14 ft·lbf)
(h) Install the wire harness clamp bracket with the bolt.
Torque: 5.4 N·m (55 kgf·cm, 48 in.·lbf)
(i) Connect the ground cable with the bolt.
Torque: 5.4 N·m (55 kgf·cm, 48 in.·lbf)

44. INSTALL NO.4 CAMSHAFT SUB−ASSY (See page 14−186)
45. INSTALL NO.3 CAMSHAFT SUB−ASSY (See page 14−186)
46. INSTALL CYLINDER HEAD COVER SUB−ASSY LH (See page 14−186)
47. INSTALL IGNITION COIL ASSY
Torque: 8.0 N·m (82 kgf·cm, 71 in.·lbf)
48. INSTALL TIMING BELT NO.3 COVER (See page 14−186)
49. INSTALL CAMSHAFT TIMING PULLEY (See page 14−186)
50. INSTALL TIMING BELT IDLER SUB−ASSY NO.2
Torque: 43 N·m (438 kgf·cm, 32 ft·lbf)
51. INSPECT TIMING BELT (See page 14−186)
52. INSTALL TIMING BELT (See page 14−186)
53. INSTALL TIMING BELT TENSIONER ASSY (See page 14−186)
54. INSTALL TIMING BELT GUIDE NO.2 (See page 14−186)
55. INSTALL ENGINE MOUNTING BRACKET RH
Torque: 28 N·m (286 kgf·cm, 21 ft·lbf)
56. INSTALL TIMING BELT NO.2 COVER (See page 14−186)
57. INSTALL TIMING BELT NO.1 COVER (See page 14−186)
58. INSTALL CRANKSHAFT PULLEY (See page 14−186)
59. INSTALL GENERATOR BRACKET NO.2
Torque: 28 N·m (286 kgf·cm, 21 ft·lbf)

60. INSTALL ENGINE MOUNTING STAY NO.2 RH (See page 14−164)
61. INSTALL ENGINE MOVING CONTROL ROD (See page 14−164)
62. INSTALL VANE PUMP V BELT (See page 14−140)
63. INSTALL V (COOLER COMPRESSOR TO CRANKSHAFT PULLEY) BELT NO.1 (See page 14−140)
64. INSPECT DRIVE BELT TENSION (See page 14−136)
65. INSTALL OIL LEVEL GAGE GUIDE (See page 17−41)
66. INSTALL WATER INLET PIPE (See page 16−32)
67. INSTALL WATER OUTLET (See page 14−239)
68. INSTALL INTAKE MANIFOLD (See page 14−164)
69. CONNECT FUEL PIPE SUB−ASSY NO.1 (See page 11−38)
70. INSTALL INTAKE AIR SURGE TANK (See page 14−142)
71. INSTALL AIR CLEANER ASSEMBLY WITH HOSE
72. CONNECT VACUUM HOSES (See page 14−164)
73. INSTALL FRONT SUSPENSION UPPER BRACE CENTER (W/ FRONT SUSPENSION BRACE UPPER CENTER)
Torque: 80 N·m (816 kgf·cm, 59 ft·lbf)
74. INSTALL V−BANK COVER SUB−ASSY (See page 14−164)
75. INSTALL EXHAUST MANIFOLD CONVERTER SUB−ASSY NO.2
(a) Install a new gasket and the exhaust manifold converter to the front exhaust pipe.
Torque: 62 N·m (633 kgf·cm, 46 ft·lbf)
76. INSTALL MANIFOLD STAY NO.2 (See page 14−164)
77. INSTALL FRONT WHEEL RH
78. ADD ENGINE OIL
79. ADD ENGINE COOLANT (See page 16−27)
80. CHECK FOR ENGINE OIL LEAKS
81. CHECK FOR ENGINE COOLANT LEAKS (See page 16−21)
82. CHECK FOR FUEL LEAKS
83. CHECK FOR EXHAUST GAS LEAKS
84. INSPECT IGNITION TIMING (See page 14−136)
85. INSPECT ENGINE IDLE SPEED (See page 14−136)
86. INSPECT COMPRESSION (See page 14−136)
87. INSPECT CO/HC (See page 14−136)

OIL PUMP SEAL (1MZ−FE/3MZ−FE)

141IN−02

REPLACEMENT

1. **REMOVE FRONT WHEEL RH**
2. **REMOVE FRONT FENDER APRON SEAL RH**
3. **REMOVE V (COOLER COMPRESSOR TO CRANKSHAFT PULLEY) BELT NO.1 (See page 14−140)**
4. **REMOVE VANE PUMP V BELT (See page 14−140)**
5. **REMOVE ENGINE MOVING CONTROL ROD (See page 14−164)**
6. **REMOVE ENGINE MOUNTING STAY NO.2 RH (See page 14−164)**
7. **REMOVE GENERATOR BRACKET NO.2**
8. **REMOVE CRANKSHAFT PULLEY (See page 14−186)**
9. **REMOVE TIMING BELT NO.1 COVER (See page 14−186)**
10. **REMOVE TIMING BELT NO.2 COVER (See page 14−186)**
11. **REMOVE ENGINE MOUNTING BRACKET RH**
12. **REMOVE TIMING BELT GUIDE NO.2**
13. **REMOVE TIMING BELT (See page 14−186)**

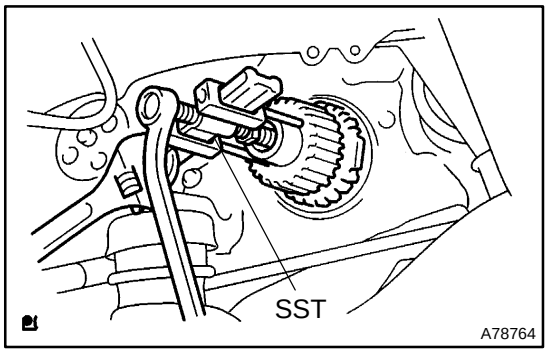

14. REMOVE CRANKSHAFT TIMING PULLEY

(a) Remove the bolt and the timing belt plate.

(b) Install the pulley bolt to the crankshaft.

(c) Using SST, remove the crankshaft timing pulley.

SST 09950−50013 (09951−05010, 09952−05010, 09953−05020, 09954−05010)

NOTICE:

- **Do not scratch the sensor part of the crankshaft timing pulley.**
- **Before using SST, apply lubricating oil on the threads and tip of the center bolt 150.**

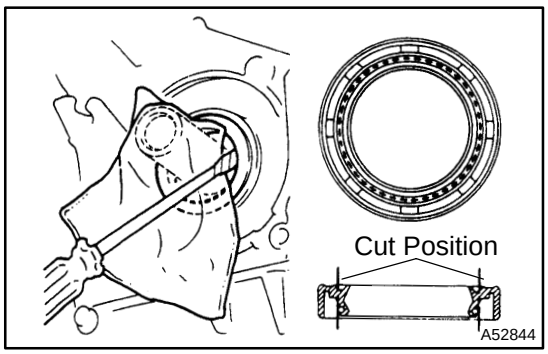

15. REMOVE OIL PUMP SEAL

(a) Using a knife, cut through the oil seal lip.

(b) Using a screwdriver with its tip wrapped in tape, pry out the oil seal.

NOTICE:

After the removal, check the crankshaft for damage. If it is damaged, smooth the surface with 400−grit sandpaper.

16. INSTALL OIL PUMP SEAL

(a) Apply MP grease to a new oil seal lip.

NOTICE:

Keep the lip free of foreign matter.

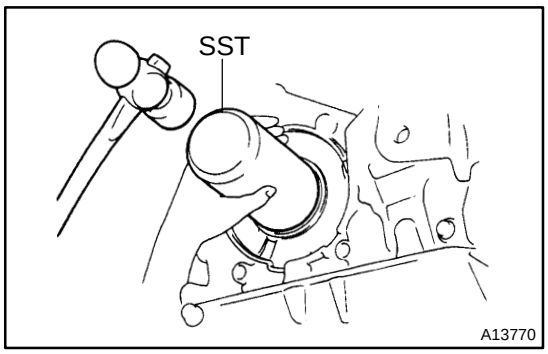

(b) Using SST and a hammer, tap in the oil seal until its surface is flush with the oil pump edge.
SST 09223−00010

NOTICE:

- **Be careful not to tap the oil seal slantingly.**
- **Wipe off extra grease on the crankshaft.**

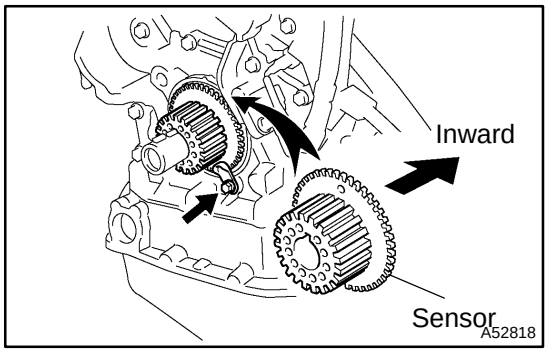

17. INSTALL CRANKSHAFT TIMING PULLEY

(a) Align the keyway of the pulley with the key located on the crankshaft and slide the pulley into place.

NOTICE:

Do not scratch the sensor part of the crankshaft timing pulley.

(b) Install the timing belt plate with the bolt.
Torque: 8.0 N·m (82 kgf·cm, 71 in.·lbf)

18. INSPECT TIMING BELT (See page 14−186)
19. INSTALL TIMING BELT (See page 14−186)
20. INSTALL TIMING BELT GUIDE NO.2 (See page 14−186)
21. INSTALL ENGINE MOUNTING BRACKET RH
Torque: 28 N·m (286 kgf·cm, 21 ft·lbf)
22. INSTALL TIMING BELT NO.2 COVER (See page 14−186)
23. INSTALL TIMING BELT NO.1 COVER (See page 14−186)
24. INSTALL CRANKSHAFT PULLEY (See page 14−186)
25. INSTALL GENERATOR BRACKET NO.2
Torque: 28 N·m (286 kgf·cm, 21 ft·lbf)
26. INSTALL ENGINE MOUNTING STAY NO.2 RH (See page 14−164)
27. INSTALL ENGINE MOVING CONTROL ROD (See page 14−164)
28. INSTALL VANE PUMP V BELT (See page 14−140)
29. INSTALL V (COOLER COMPRESSOR TO CRANKSHAFT PULLEY) BELT NO.1 (See page 14−140)
30. INSPECT DRIVE BELT TENSION (See page 14−136)
31. INSTALL FRONT WHEEL RH
32. CHECK FOR ENGINE OIL LEAKS

ENGINE REAR OIL SEAL (1MZ−FE/3MZ−FE)

1405R−09

REPLACEMENT

1. REMOVE AUTOMATIC TRANSAXLE ASSY (See page 40−9)

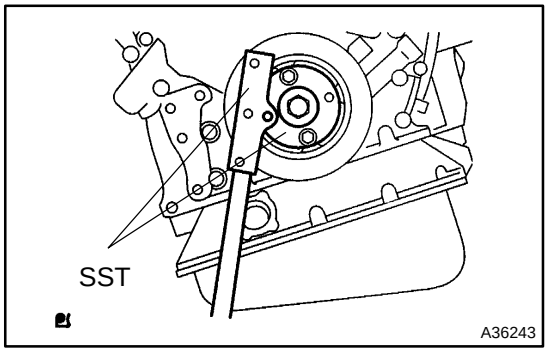

2. REMOVE DRIVE PLATE & RING GEAR SUB−ASSY

(a) Using SST, hold the crankshaft.
SST 09213−54015 (91651−60855), 09330−00021

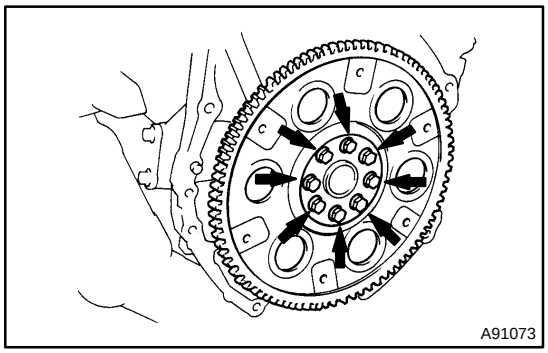

(b) Remove the 8 bolts, the rear spacer, the drive plate and the front spacer.

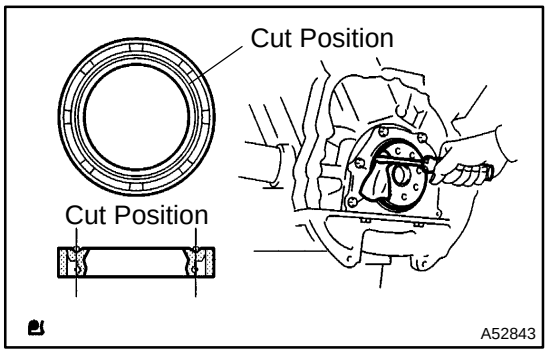

3. REMOVE ENGINE REAR OIL SEAL

(a) Using a knife, cut off the oil seal lip.
(b) Using a screwdriver with its tip wrapped in tape, pry out the oil seal.

NOTICE:

After the removal, check if the crankshaft is not damaged. If it is damaged, smooth the surface with 400−grit sandpaper.

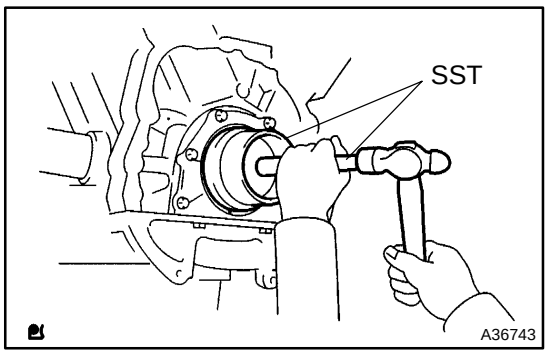

4. INSTALL ENGINE REAR OIL SEAL

(a) Apply MP grease to a new oil seal lip.

NOTICE:

Keep the lip off foreign materials.

(b) Using SST and a hammer, tap in the oil seal until its surface is flush with the rear oil seal retainer edge.
SST 09223−15030, 09950−70010 (09951−07100)

NOTICE:

- **Be careful not to tap the oil seal at an angle.**
- **Wipe off extra grease from the crankshaft.**

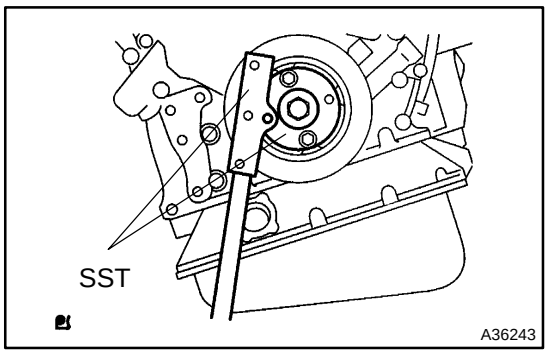

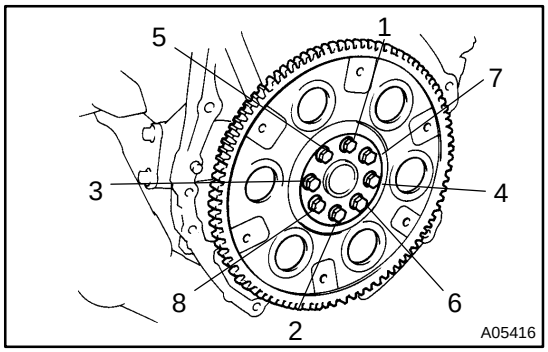

5. INSTALL DRIVE PLATE & RING GEAR SUB−ASSY

(a) Using SST, hold the crankshaft.
SST 09213−54015 (91651−60855), 09330−00021

(b) Clean the bolts and bolt holes.

(c) Apply adhesive to 2 or 3 threads of the bolts.
Adhesive:
Part No. 08833−00070, THREE BOND 1324 or equivalent

(d) Install the front spacer, the drive plate and the rear spacer on the crankshaft.

(e) Uniformly install and tighten the 8 bolts in the sequence shown in the illustration.
Torque: 83 N·m (846 kgf·cm, 61 ft·lbf)

NOTICE:
Do not start the engine for at least an hour after installing.

6. INSTALL AUTOMATIC TRANSAXLE ASSY (See page 40−9)

CYLINDER HEAD ASSY (1MZ−FE/3MZ−FE)

141IO−02

COMPONENTS

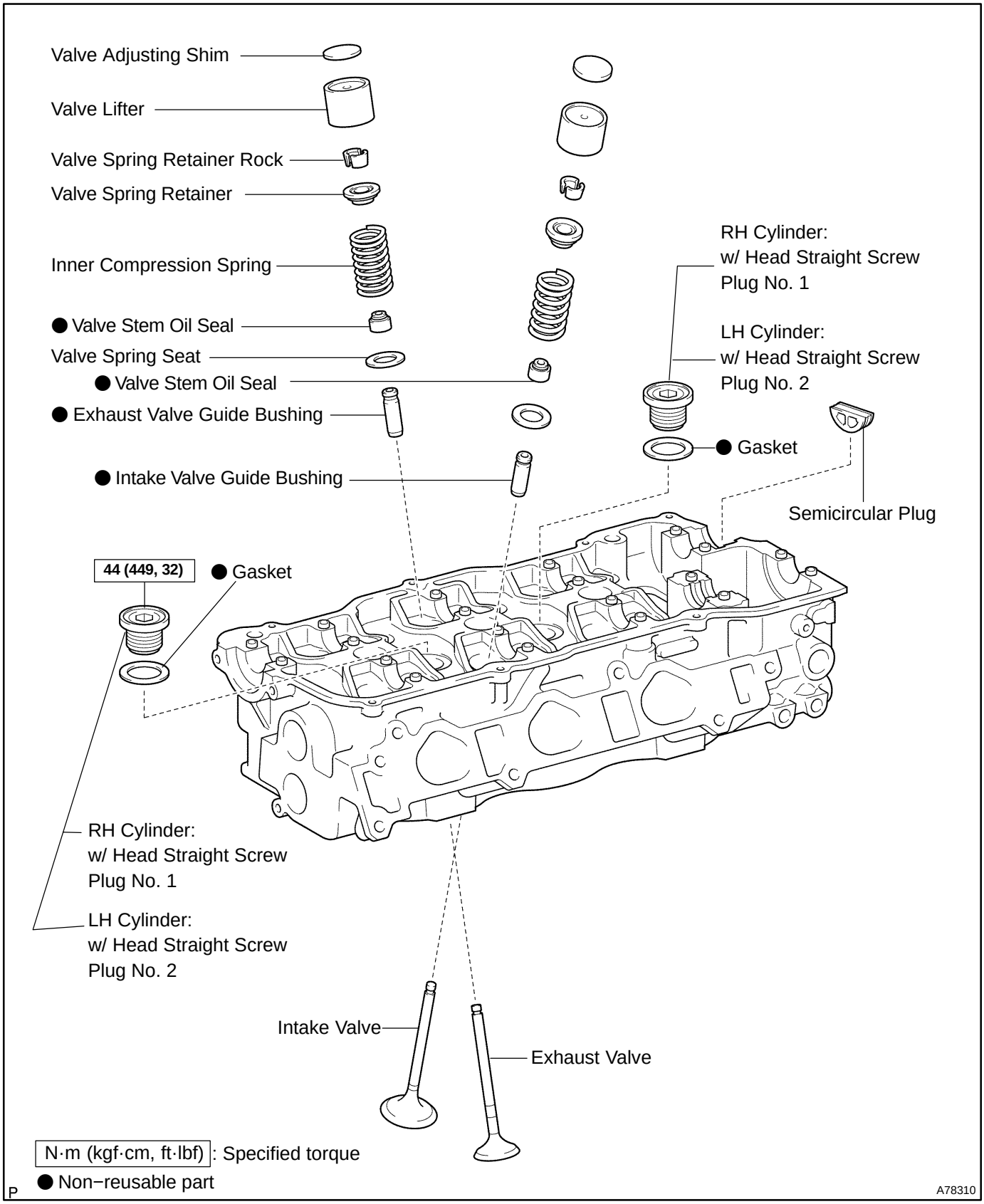

P

A78310

141IP−02

OVERHAUL

1. REMOVE W/HEAD STRAIGHT SCREW PLUG NO.1 (RH CYLINDER)

(a) Using a straight hexagon wrench 14, remove the 2 screw plugs.

2. REMOVE W/HEAD STRAIGHT SCREW PLUG NO.2 (LH CYLINDER)

(a) Using a straight hexagon wrench 14, remove the 2 screw plugs.

3. REMOVE VALVE LIFTER

HINT:

Store the lifters in correct order so that they can be returned to the original locations when reassembling.

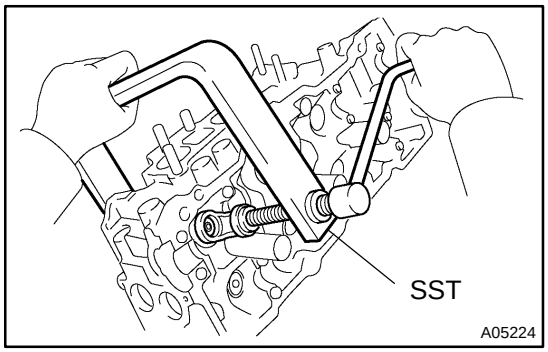

4. REMOVE INTAKE VALVE

(a) Using SST, compress the valve spring and remove the 2 keepers, retainer, spring and valve.

SST 09202−70020 (09202−00010)

HINT:

Store the valves, valve springs, spring seats and spring retainers in correct order so that they can be returned to the original locations when reassembling.

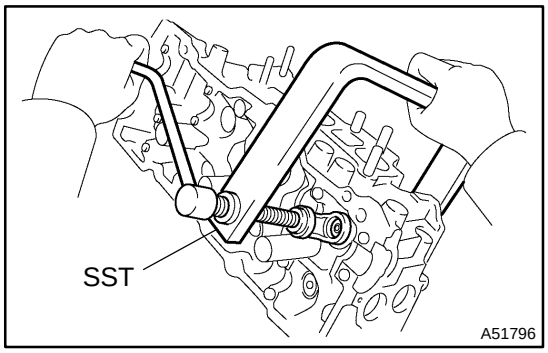

5. REMOVE EXHAUST VALVE

(a) Using SST, compress the valve spring and remove the 2 keepers, retainer, spring and valve.

SST 09202−70020 (09202−00010)

HINT:

Store the valves, valve springs, spring seats and spring retainers in correct order so that they can be returned to the original locations when reassembling.

6. REMOVE VALVE STEM OIL O SEAL OR RING

(a) Using needle−nose pliers, remove the oil seal.

7. REMOVE VALVE SPRING SEAT

8. REMOVE SEMICIRCULAR PLUG

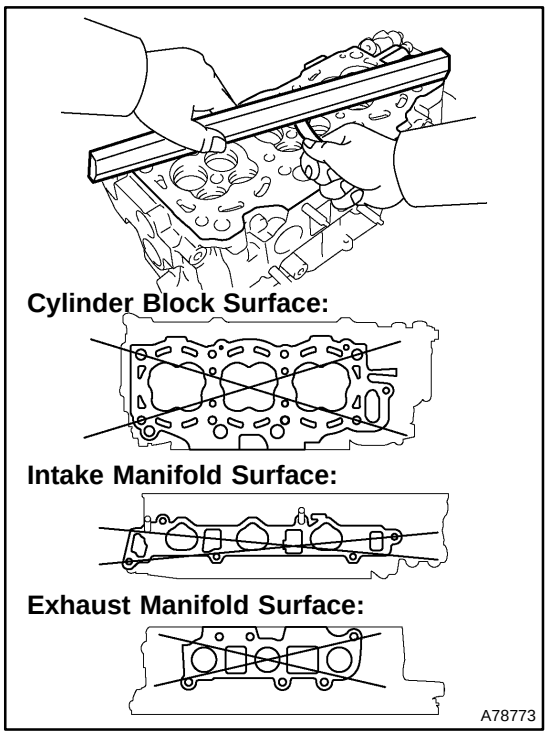

9. INSPECT CYLINDER HEAD FOR FLATNESS

(a) Using a precision straight edge and a feeler gauge, measure the surface contacting the cylinder block and the manifolds for warpage.

Maximum warpage:

Item	Specified Condition
Cylinder block surface	0.05 mm (0.0020 in.)
Intake manifold surface	0.10 mm (0.0039 in.)
Exhaust manifold surface	0.10 mm (0.0039 in.)

If the warpage is greater than the maximum, replace the cylinder head.

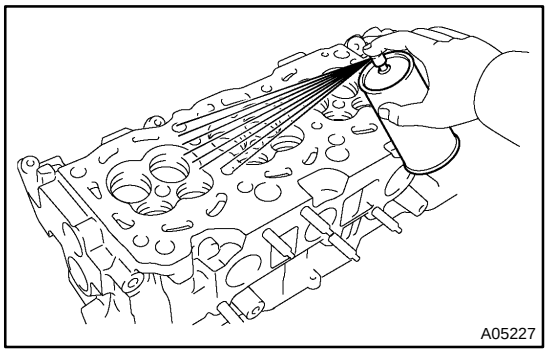

10. INSPECT CYLINDER HEAD FOR CRACKS

(a) Using a dye penetrate, check the combustion chamber, intake ports, exhaust ports and cylinder block surface for cracks.

If cracked, replace the cylinder head.

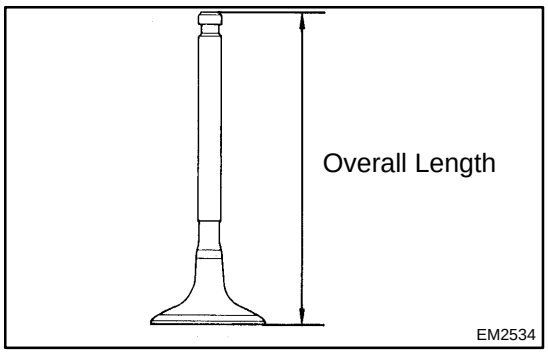

11. INSPECT INTAKE VALVE

(a) Check the valve overall length.

Specified overall length:
94.95 − 95.45 mm (3.7382 − 3.7579 in.)

If the overall length is less than the minimum, replace the valve.

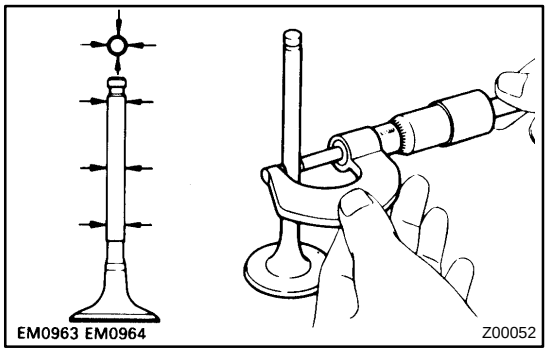

(b) Using a micrometer, measure the diameter of the valve stem.

Valve stem diameter:
5.470 to 5.485 mm (0.2154 to 0.2159 in.)

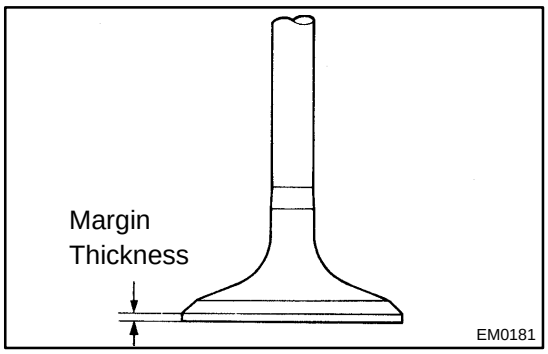

(c) Check the valve head margin thickness.
Specified margin thickness:
0.5 − 1.0 mm (0.020 − 0.039 in.)

If the margin thickness is less than the minimum, replace the valve.

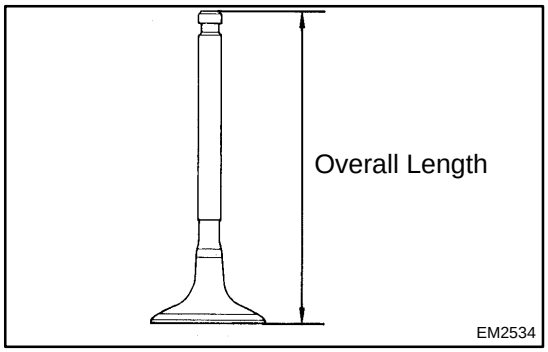

12. INSPECT EXHAUST VALVE

(a) Check the valve overall length.
Specified overall length:
94.90 − 95.40 mm (3.7362 − 3.7559 in.)

If the overall length is less than the minimum, replace the valve.

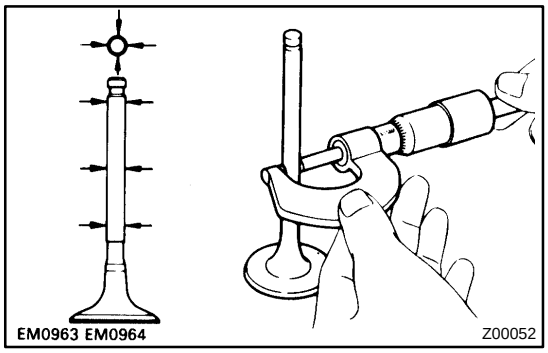

(b) Using a micrometer, measure the diameter of the valve stem.
Valve stem diameter:
5.465 to 5.480 mm (0.2152 to 0.2157 in.)

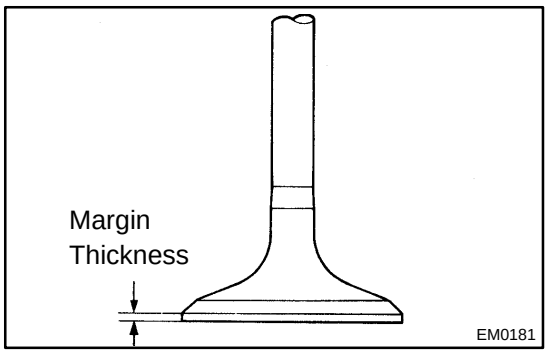

(c) Check the valve head margin thickness.
Specified margin thickness:
0.5 − 1.0 mm (0.020 − 0.039 in.)

If the margin thickness is less than the minimum, replace the valve.

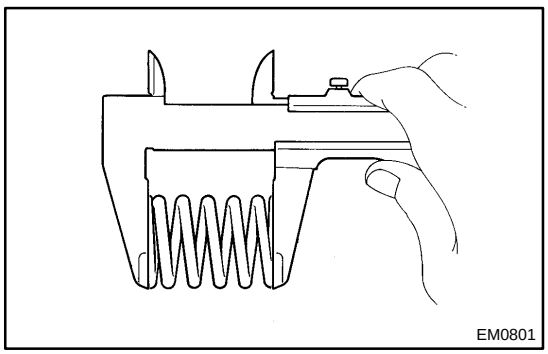

13. INSPECT INNER COMPRESSION SPRING

(a) Using a vernier caliper, measure the free length of the valve spring.
Free length: 45.50 mm (1.7913 in.)

If the free length is not as specified, replace the valve spring.

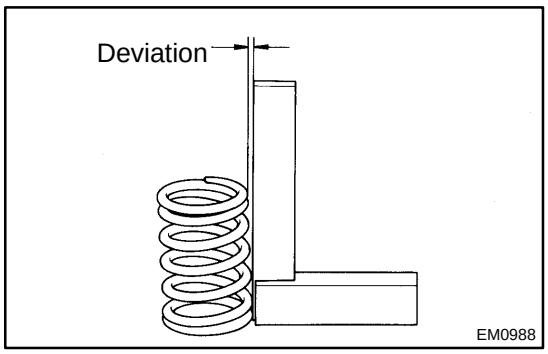

(b) Using steel squares, measure the deviation of the valve spring.

Maximum deviation: 2.0 mm (0.079 in.)

If the deviation is greater than the maximum, replace the valve spring.

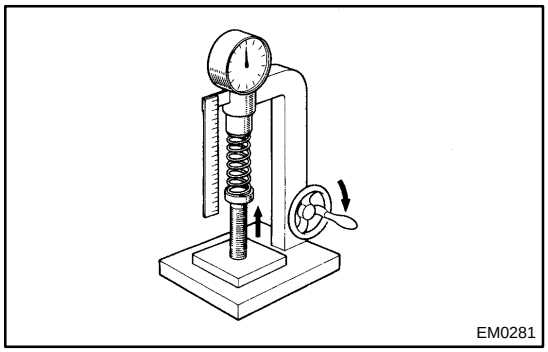

(c) Using a spring tester, measure the tension of the valve spring at the specified installed length.

Installed tension:
86 to 206 N (19.0 to 21.0 kgf, 41.9 to 46.3 lbf)
at 33.8 mm (1.331 in.)

If the installed tension is not as specified, replace the valve spring.

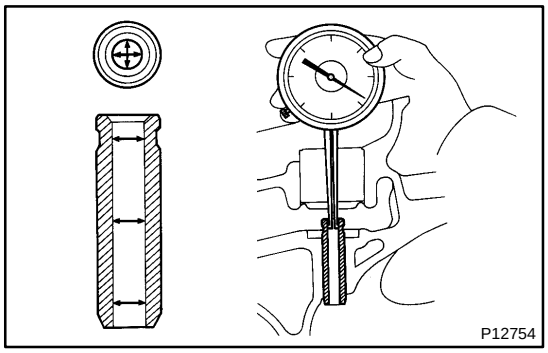

14. INSPECT VALVE GUIDE BUSHING OIL CLEARANCE

(a) Using a caliper gauge, measure the inside diameter of the guide bushing.

Bushing inside diameter:
5.510 to 5.530 mm (0.2169 to 0.2177 in.)

(b) Subtract the valve stem diameter measurement from the guide bushing inside diameter measurement.

Specified oil clearance:

Item	Specified Condition
Intake	0.025 to 0.080 mm (0.0010 to 0.0031 in.)
Exhaust	0.030 to 0.100 mm (0.0012 to 0.0039 in.)

If the clearance is greater than the maximum, replace the valve and guide bushing.

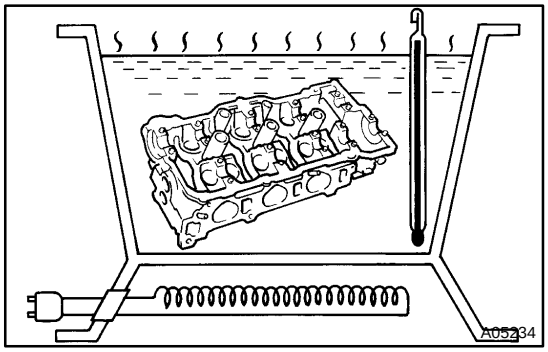

15. REMOVE VALVE GUIDE BUSHING

(a) Heat the cylinder head to approximately 80 to 100 ●C (176 to 212 ●F).

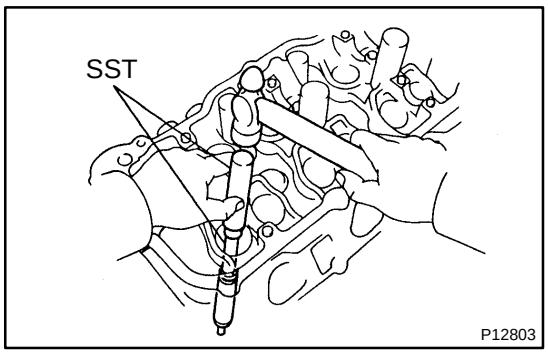

(b) Using SST and a hammer, tap out the guide bushing.
SST 09201−10000, 09201−01055, 09950−70010 (09951−07100)

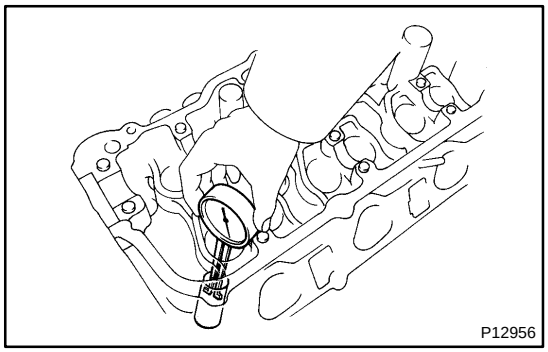

16. INSTALL VALVE GUIDE BUSHING

(a) Using a caliper gauge, measure the bushing bore diameter of the cylinder head.

Diameter: 10.295 to 10.313 mm (0.4053 to 0.4060 in.)

If the bushing bore diameter of the cylinder head is greater than 10.313 mm (0.4060 in.), machine the bushing bore to the dimension of 10.345 to 10.363 mm (0.4073 to 0.4080 in.).

Bushing diameter:

STD	10.333 to 10.344 mm (0.4068 to 0.4072 in.)
O/S	10.383 to 10.394 mm (0.4088 to 0.4092 in.)

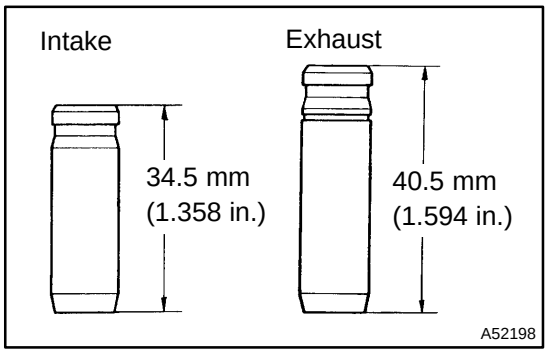

HINT:

Different the bushes are used for the intake and exhaust.

Bushing length:

Intake	34.5 mm (1.358 in.)
Exhaust	40.5 mm (1.594 in.)

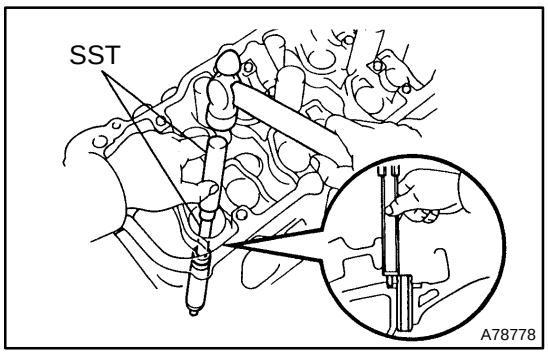

(b) Heat the cylinder head to approximately 80 to 100 °C (176 to 212 °F)

(c) Using SST and a hammer, tap in a new guide bushing to the specified protrusion height.
SST 09201−10000, 09201−01055, 09950−70010 (09951−07100)

Protrusion height:

Item	Specified Condition
Intake	11.1 to 11.5 mm (0.437 to 0.453 in.)
Exhaust	8.9 to 9.3 mm (0.350 to 0.336 in.)

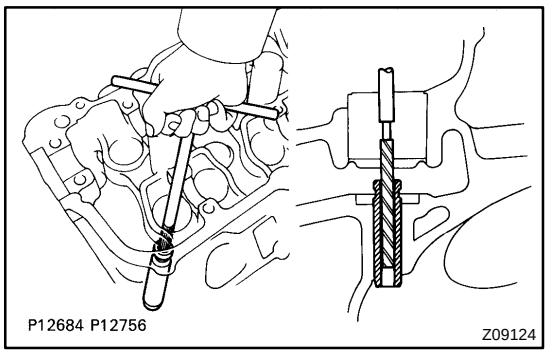

(d) Using a sharp 5.5 mm reamer, ream the guide bushing to obtain the standard specified clearance between the guide bushing and the valve stem.

Standard oil clearance:

Item	Specified Condition
Intake	0.025 to 0.060 mm (0.0010 to 0.0024 in.)
Exhaust	0.030 to 0.065 mm (0.0012 to 0.0026 in.)

17. INSPECT VALVE SEATS

(a) Apply a light coat of prussian blue (or white lead) to the valve face.

(b) Lightly press the valve against the seat.

NOTICE:

Do not rotate the valve.

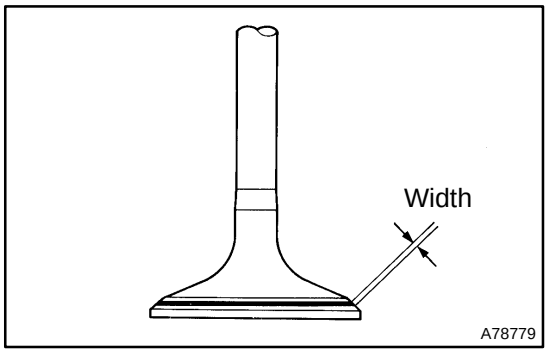

(c) Check the valve face and valve seat according to the following procedure.

(1) If blue appears 360● around the valve face, the valve face is concentric. If not, replace the valve.

(2) If blue appears 360● around the valve seat, the guide and valve face are concentric. If not, resurface the valve seat.

(3) Check that the valve seat contact is in the middle of the valve face with the width between 1.0 to 1.4 mm (0.039 to 0.055 in.).

18. REPAIR VALVE SEATS

NOTICE:

Releasing the seat−cutter pressure gradually helps to make smoother valve seat faces.

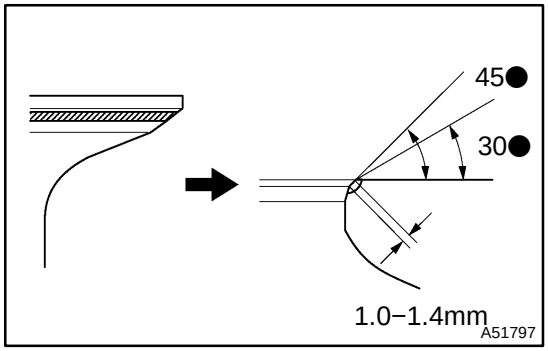

(a) If the seating is too high on the valve face, use 30● and 45● cutters to correct the seat.

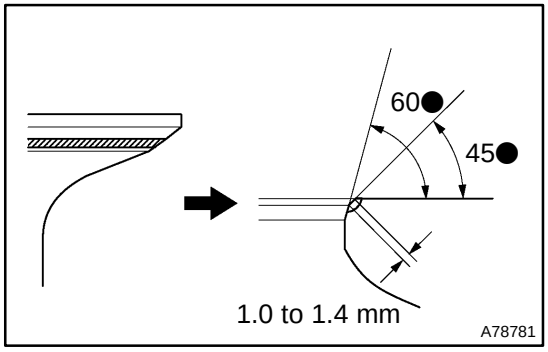

(b) If the seating is too low on the valve face, use 60● and 45● cutters to correct the seat.

(c) Handrub the valve and valve seat with an abrasive compound.

(d) Recheck the valve seating position.

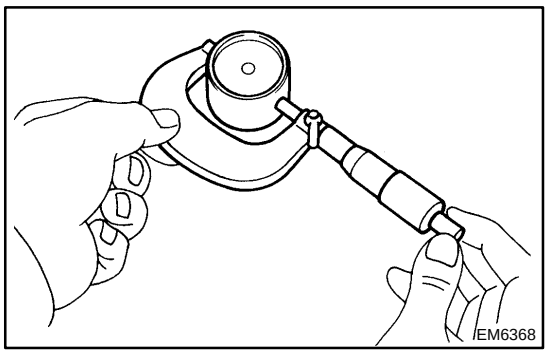

19. INSPECT VALVE LIFTER

(a) Using a micrometer, measure the lifter diameter.

Lifter diameter:

30.966 to 30.976 mm (1.2191 to 1.2195 in.)

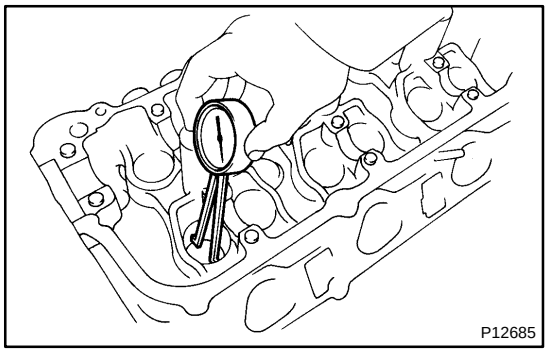

20. INSPECT VALVE LIFTER OIL CLEARANCE

(a) Using a caliper gauge, measure the lifter bore diameter of the cylinder head.

Lifter bore diameter:

31.009 to 31.025 mm (1.2208 to 1.2215 in.)

(b) Subtract the lifter diameter measurement from the lifter bore diameter measurement.

Specified oil clearance:

0.033 to 0.070 mm (0.0013 to 0.0028 in.)

If the oil clearance is greater than the maximum, replace the lifter. If necessary, replace the cylinder head.

21. INSPECT CAMSHAFT GEAR BACKLASH

(a) Install the camshaft timing gear assembly.

(b) Install the camshafts to the cylinder head.

NOTICE:

- **Install without valves and sub−gear.**
- **Install with its timing mark matched.**

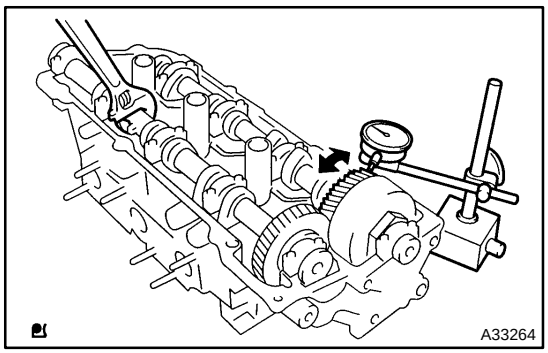

(c) Set the dial indicator to the teeth of the intake camshaft at a right angle (90°).

(d) Measure the backlash of the camshaft timing gear at least 4 positions.

Specified backlash:

0.020 to 0.300 mm (0.0008 to 0.0118 in.)

If the backlash is greater than the maximum, replace the camshafts.

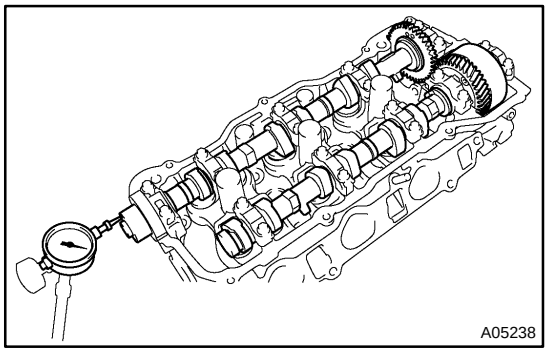

22. INSPECT CAMSHAFT THRUST CLEARANCE

(a) Install the camshafts.

(b) Using a dial indicator, measure the thrust clearance while moving the camshaft back and forth.

Specified thrust clearance:

0.040 to 0.120 mm (0.0016 to 0.0047 in.)

If the thrust clearance is greater than the maximum, replace the camshaft. If necessary, replace the bearing caps and cylinder head together.

23. INSPECT CAMSHAFT OIL CLEARANCE

(a) Clean the bearing caps and camshaft journals.

(b) Place the camshafts on the cylinder head.

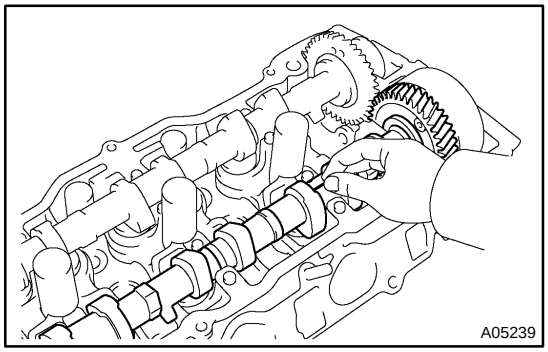

(c) Lay a strip of plastigage across each of the camshaft journal.

(d) Install the bearing caps.

Torque: 16 N·m (163 kgf·cm, 12 ft·lbf)

NOTICE:

Do not turn the camshaft.

(e) Remove the bearing caps.

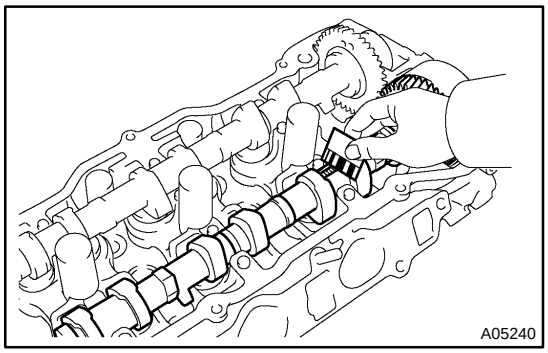

(f) Measure the plastigage at its widest point.

Specified oil clearance:

0.025 to 0.100 mm (0.0010 to 0.0039 in.)

If the oil clearance is greater than the maximum, replace the camshaft. If necessary, replace the bearing caps and cylinder head together.

NOTICE:

Completely remove the plastigage.

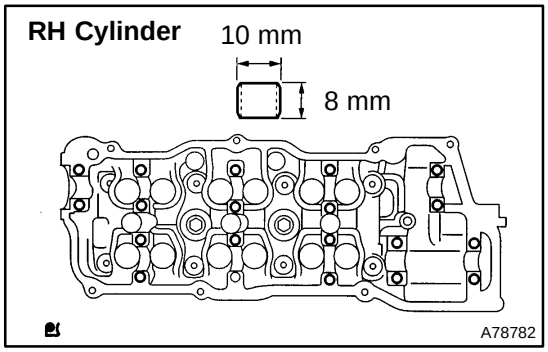

24. INSTALL RING W/HEAD PIN (RH CYLINDER)

(a) Using a plastic−faced hammer, tap in a new ring pin to the specified protrusion height.

Protrusion height: 3 mm (0.12 in.)

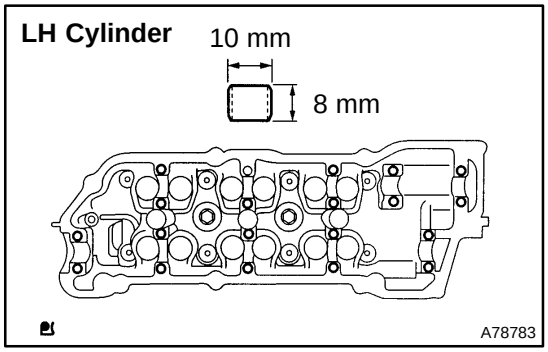

25. INSTALL RING PIN (LH CYLINDER)

(a) Using a plastic−faced hammer, tap in a new ring pin to the specified protrusion height.

Protrusion height: 3 mm (0.12 in.)

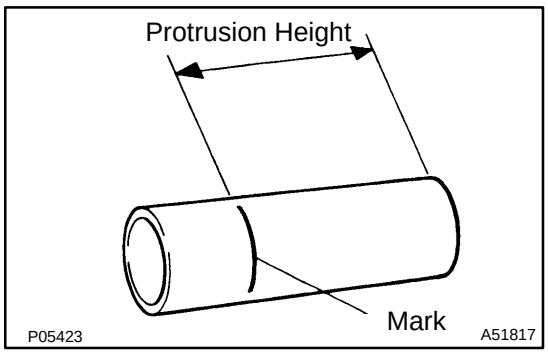

26. INSTALL SPARK PLUG TUBE

(a) Using paint, mark the standard position from the edge.
Standard protrusion height:
42.4 to 43.4 mm (1.669 to 1.709 in.)

HINT:

Use either end of the spark plug tube.

(b) Apply adhesive to the spark plug tube where it will be pressed into the cylinder head.
Adhesive: Part No. 08833−00070 THREE BOND 1324 or equivalent

NOTICE:

- **Install the spark plug tube within 3 minutes after applying adhesive.**
- **Do not deform the spark plug tube.**
- **Do not expose the seal to coolant for at least 1 hour after installing.**

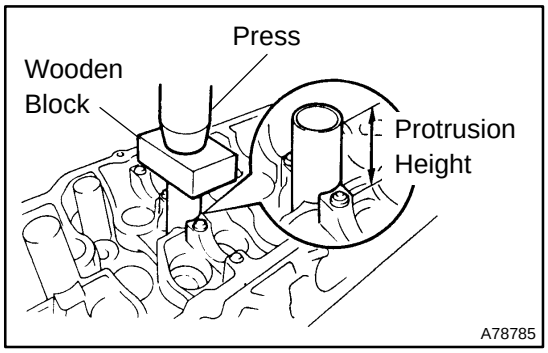

(c) Using a press and wooden block, install the spark plug tube to the required protrusion height.

NOTICE:

Be careful not to drip the adhesive.

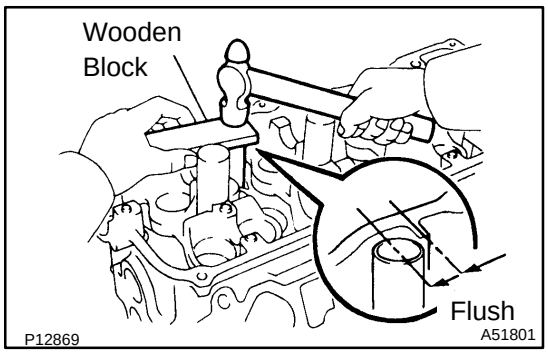

27. INSTALL PCV PIPE

(a) Using a wooden block and hammer, tap in 2 new PCV pipes until its top edge is flush with the cylinder head edge.

NOTICE:

Be careful not to damage the cylinder head edge.

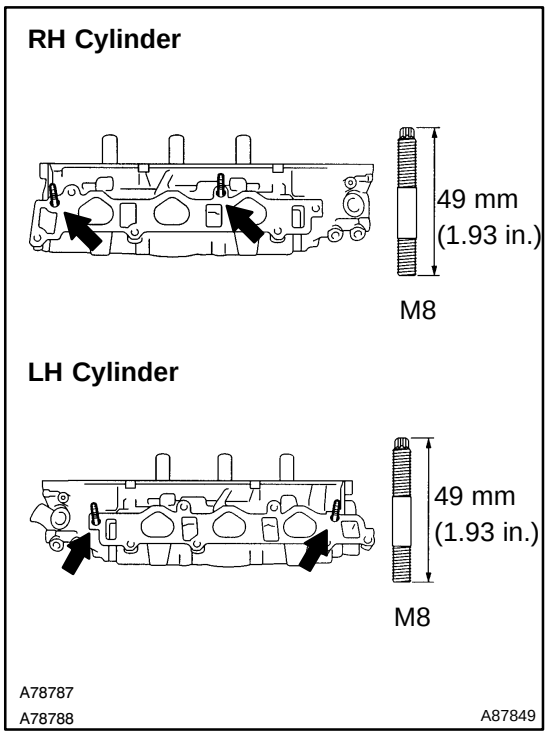

28. INSTALL STUD BOLT

(a) Install the stud bolts on the intake side.
Torque: 7.5 N·m (76 kgf·cm, 66 in.·lbf)

29. INSTALL STUD BOLT

(a) Install the stud bolts on the exhaust side.
Torque: 20 N·m (199 kgf·cm, 14 ft·lbf)

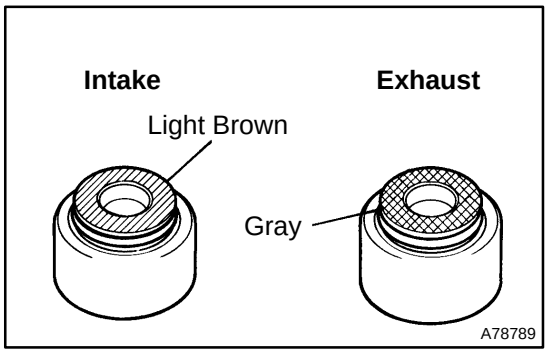

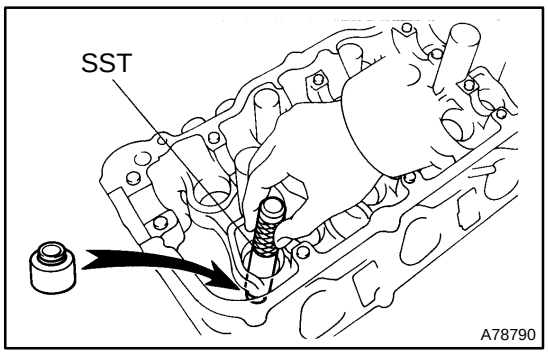

30. INSTALL VALVE STEM OIL O SEAL OR RING

(a) Apply a light coat of engine oil on the valve stem.

NOTICE:

Pay close attention when installing the intake and exhaust oil seals. For example, installing the intake oil seal into the exhaust or installing the exhaust oil seal to the intake can cause installation problems later.

HINT:

The intake valve oil seal is light brown and the exhaust valve oil seal is gray.

(b) Using SST, push in a new oil seal.
SST 09201−41020

NOTICE:

Failure to use SST will cause the seal to be damaged or improperly seated.

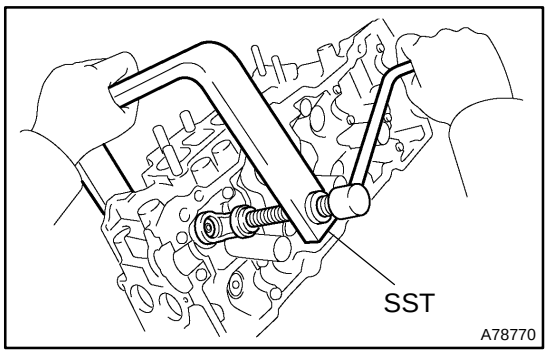

31. INSTALL INTAKE VALVE

(a) Install the valve, spring seat, valve spring and spring retainer.

NOTICE:

Install the same part in the same combination to the original locations.

(b) Using SST, compress the valve spring and place the 2 keepers around the valve stem.
SST 09202−70020 (09202−00010)

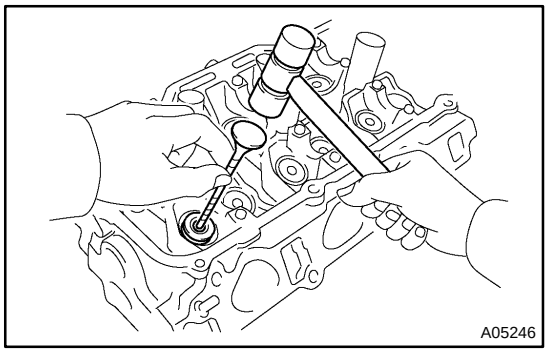

(c) Using a plastic−faced hammer and a discarded valve with its tip wrapped in tape, lightly tap the installed valve to ensure that it is securely fit.

NOTICE:

Be careful not to damage the installed valve stem tip.

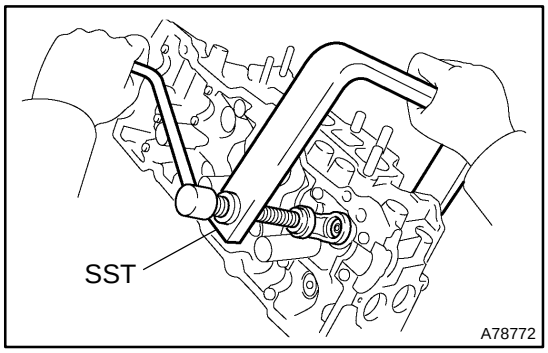

32. INSTALL EXHAUST VALVE

(a) Install the valve, spring seat, valve spring and spring retainer.

NOTICE:

Install the same parts in the same combination to the original locations.

(b) Using SST, compress the valve spring and place the 2 keepers around the valve stem.
SST 09202−70020 (09202−00010)

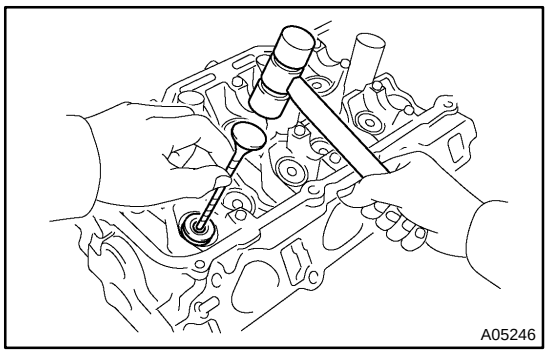

(c) Using a plastic−faced hammer and a discarded valve with its tip wrapped in tape, lightly tap the installed valve to ensure that it is securely fit.

NOTICE:

Be careful not to damage the installed valve stem tip.

33. INSTALL VALVE LIFTER

(a) Apply a light coat of engine oil on the valve lifter.

NOTICE:

Install the same part in the same combination to the original locations.

(b) Install the valve lifter.

(c) Check that the valve lifter rotates smoothly by hand.

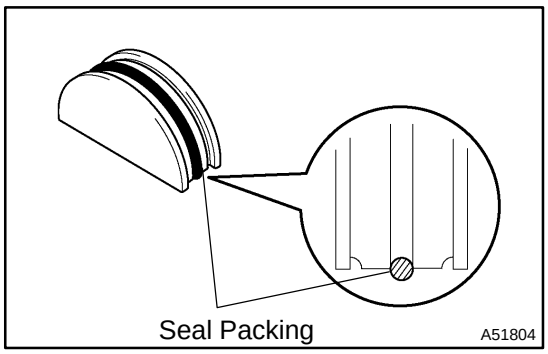

34. INSTALL SEMICIRCULAR PLUG

(a) Remove any old seal packing (FIPG) material.

(b) Apply seal packing to the semi circular plug grooves.
Seal packing: Part No. 08826−00080 or equivalent

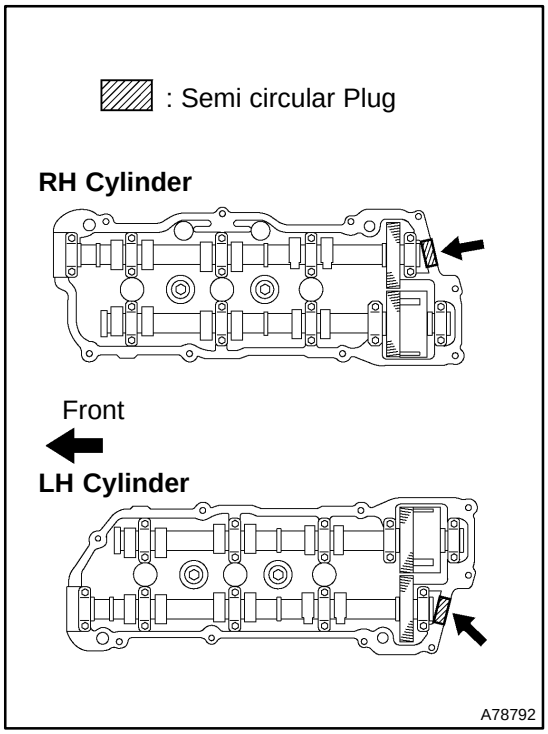

(c) Install the 2 semi circular plugs to the cylinder heads.

NOTICE:

- **Install the plugs so that it is flush with the top of the cylinder head.**
- **Install the semi circular plugs within 3 minutes after applying seal packing.**
- **Do not expose the seal to engine oil for at least 2 hours after installing.**

35. INSTALL W/HEAD STRAIGHT SCREW PLUG NO.2

(a) Using a straight hexagon wrench 14, install 2 new gaskets and the 2 screw plugs.
Torque: 44 N·m (449 kgf·cm, 32 ft·lbf)

36. INSTALL W/HEAD STRAIGHT SCREW PLUG NO.1

(a) Using a straight hexagon wrench 14, install 2 new gaskets and the 2 screw plugs.
Torque: 44 N·m (449 kgf·cm, 32 ft·lbf)

CYLINDER BLOCK ASSY (1MZ−FE/3MZ−FE)

COMPONENTS

141IQ−02

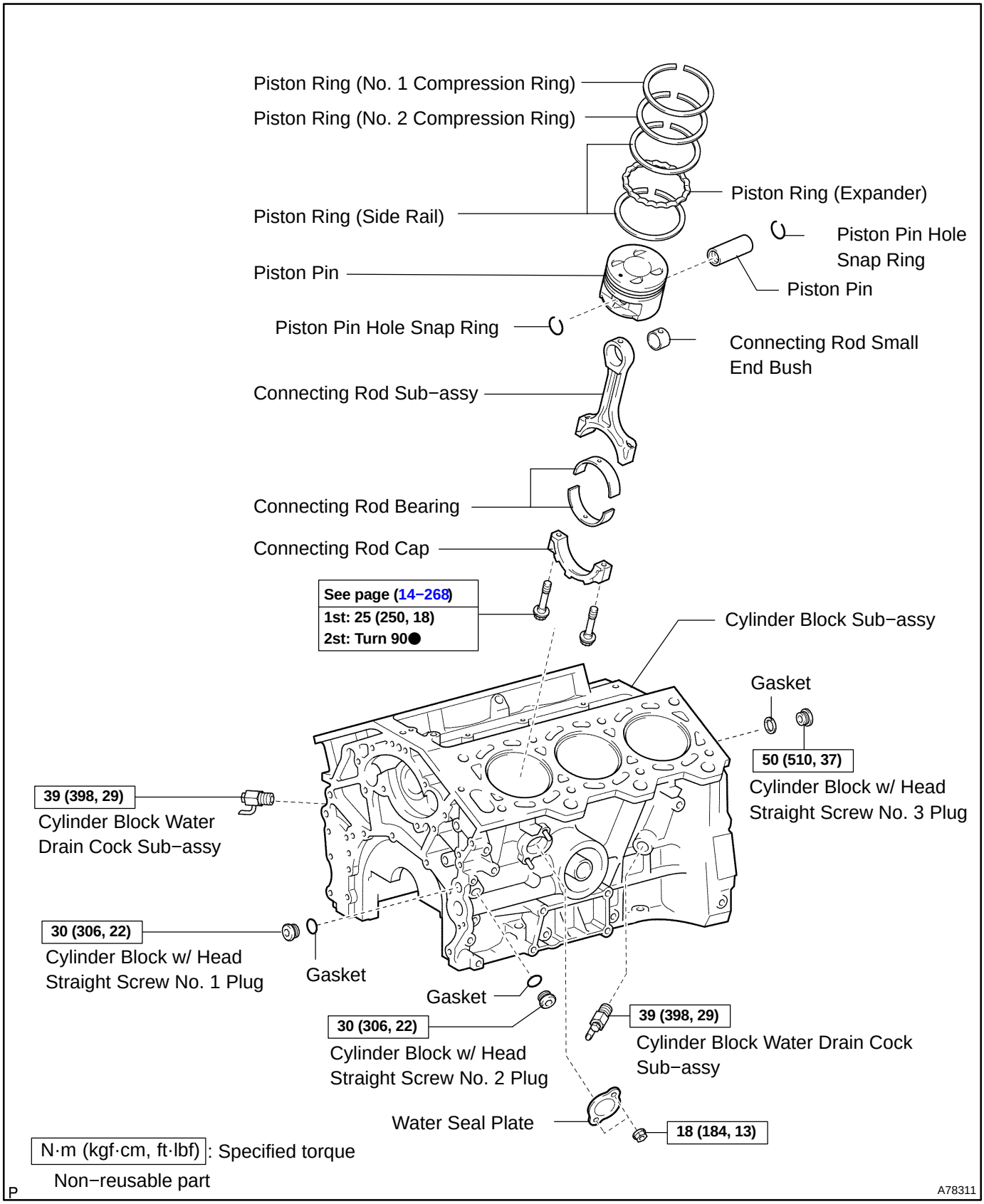

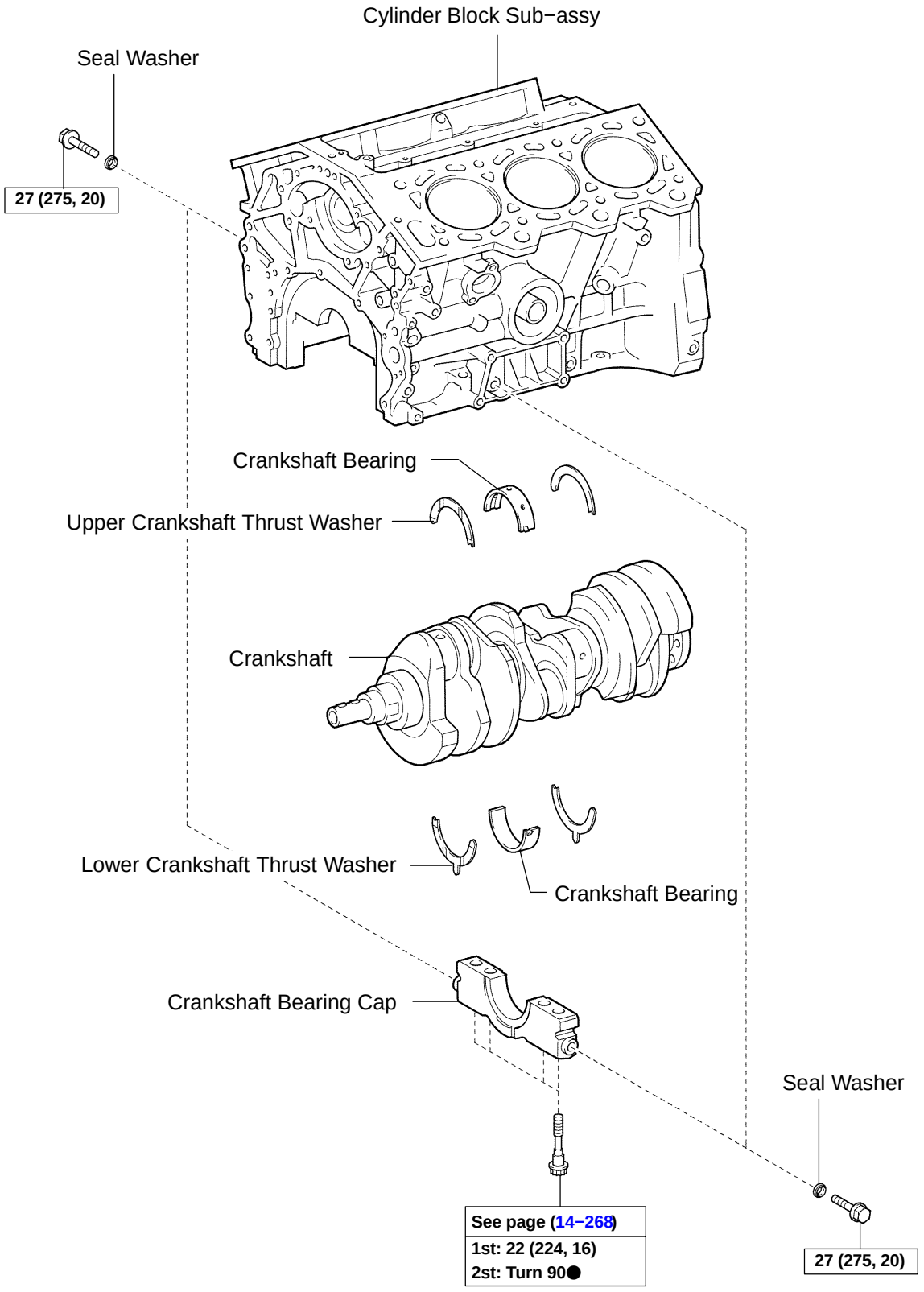

N·m (kgf·cm, ft·lbf): Specified torque

Non−reusable part

P

A78312

141IY−02

OVERHAUL

1. REMOVE CYLINDER BLOCK WATER DRAIN COCK SUB−ASSY

2. REMOVE WATER SEAL PLATE

3. REMOVE CYLINDER BLOCK W/HEAD STRAIGHT SCREW NO.1 PLUG

(a) Using a socket hexagon wrench 10, remove the screw plug.

4. REMOVE CYLINDER BLOCK W/HEAD STRAIGHT SCREW NO.2 PLUG

(a) Using a socket hexagon wrench 10, remove the screw plug.

5. REMOVE CYLINDER BLOCK W/HEAD STRAIGHT SCREW NO.3 PLUG

(a) Using a socket hexagon wrench 10, remove the screw plug.

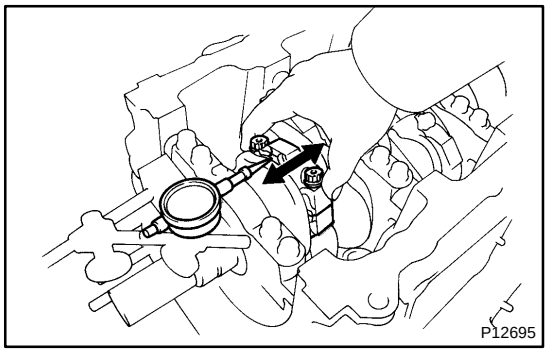

6. INSPECT CONNECTING ROD THRUST CLEARANCE

(a) Using a dial indicator, measure the thrust clearance while moving the connecting rod back and forth.

Specified thrust clearance:
0.15 to 0.35 mm (0.0059 to 0.0138 in.)

If the thrust clearance is greater than the maximum, replace the connecting rod assembly(s). If necessary, replace the crankshaft.

Connecting rod thickness:
20.80 to 20.85 mm (0.8189 to 0.8209 in.)

7. INSPECT CONNECTING ROD OIL CLEARANCE

(a) Check that the matchmarks on the connecting rod and cap are aligned to ensure correct reassembly.

(b) Remove the 2 connecting rod cap bolts.

(c) Clean the crank pin, the bearing and the connecting rod.

(d) Check the crank pin and bearing for pitting and scratches.

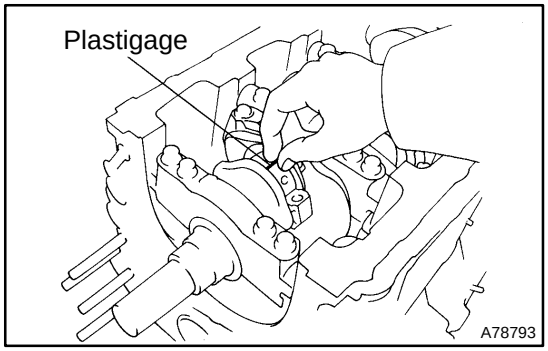

(e) Lay a strip of plastigage across the crank pin.

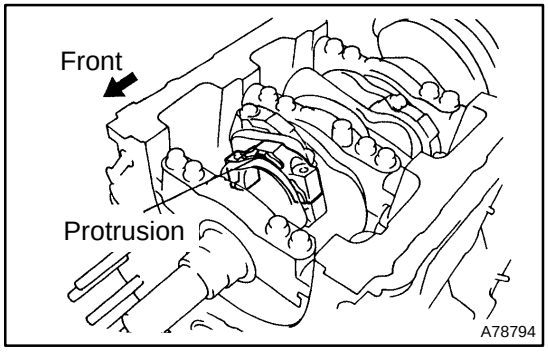

(f) Check that the protrusion of the connecting rod cap is facing the correct direction.

(g) Apply a light coat of engine oil on the threads of the connecting rod cap bolts.

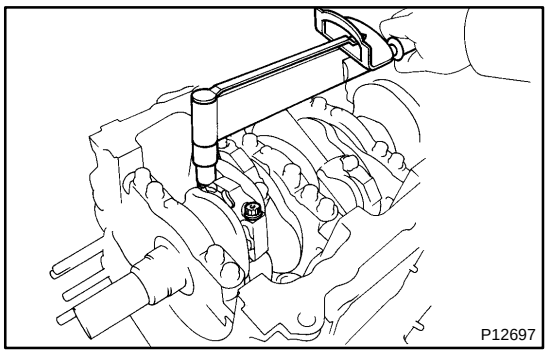

(h) Tighten the bolts in several steps by the specified torque.
Torque: 25 N·m (250 kgf·cm, 18 ft·lbf)

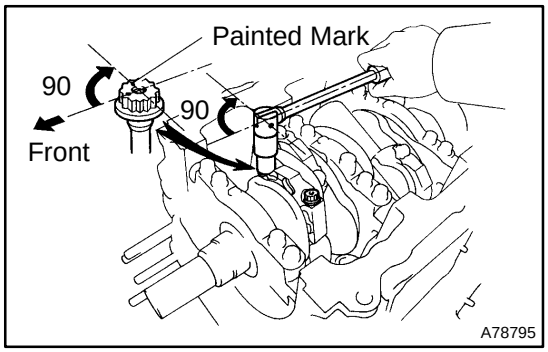

(i) Mark the front side of each connecting cap bolt with paint.
(j) Retighten the cap bolts by 90 as shown in the illustration.

NOTICE:

Do do not turn the crankshaft.

(k) Remove the 2 bolts, the connecting rod cap and the lower bearing.

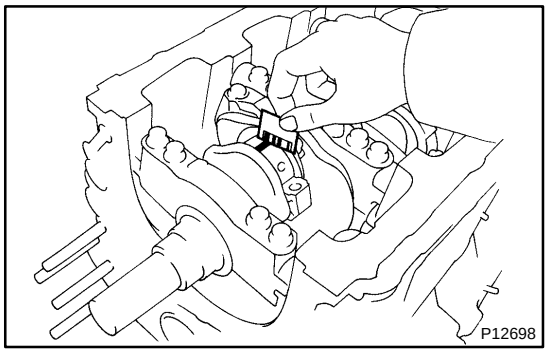

(l) Measure the plastigage at its widest point.
Specified oil clearance:
0.038 to 0.080 mm (0.0015 to 0.0031 in.)

If the oil clearance is greater than the maximum, replace the bearings. If necessary, grind or replace the crankshaft.

(m) Completely remove the plastigage.

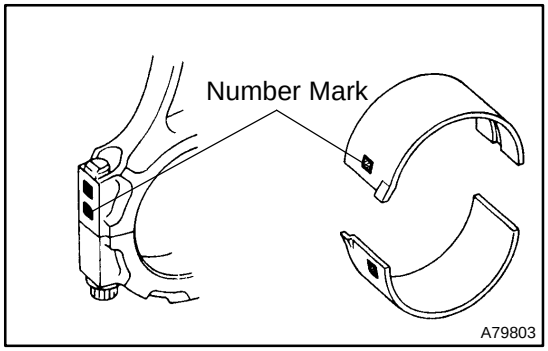

HINT:

If replacing the bearing, replace it with one that has the same number as the connecting rod. There are 4 sizes of standard bearings: 1, 2, 3 and 4.

Standard bearing center wall thickness:

Mark	Specified Condition
1	1.484 to 1.487 mm (0.0584 to 0.0585 in.)
2	1.487 to 1.490 mm (0.0585 to 0.0587 in.)
3	1.490 to 1.493 mm (0.0587 to 0.0588 in.)
4	1.493 to 1.496 mm (0.0588 to 0.0589 in.)

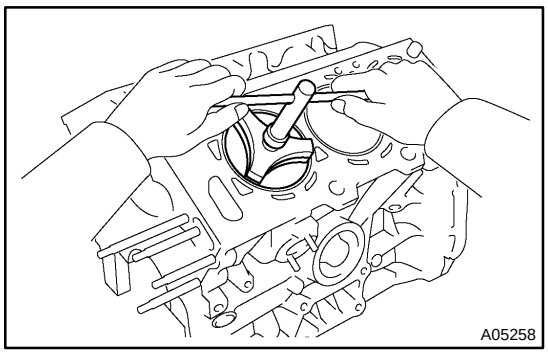

8. REMOVE PISTON SUB−ASSY W/CONNECTING ROD

(a) Using a ridge reamer, remove all the carbon from the top of the cylinder.

(b) Push out the piston and the connecting rod assembly from the top of the cylinder block.

HINT:

- Keep the bearings, the connecting rod and the cap together.
- Arrange the piston and the connecting rod assemblies in correct order so they can be returned to the original locations when reassembling.

9. REMOVE CONNECTING ROD BEARING

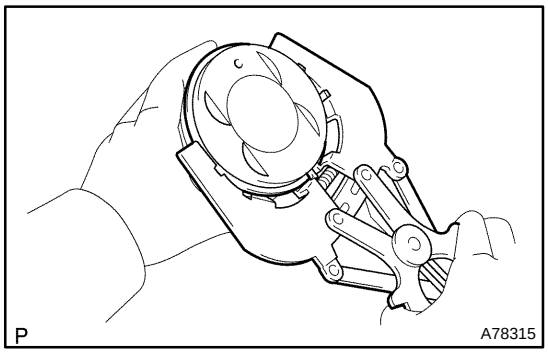

10. REMOVE PISTON RING SET

(a) Using a piston ring expander, remove the 2 compression rings.

(b) Remove the 2 side rails and oil ring by hand.

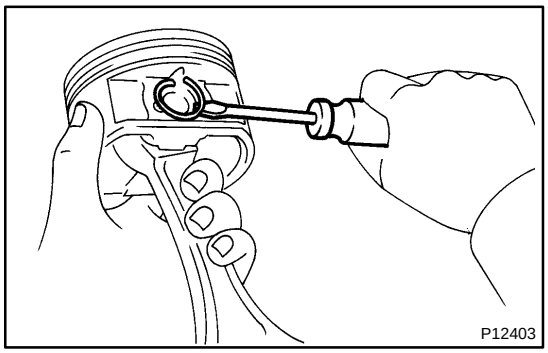

11. REMOVE PISTON PIN HOLE SNAP RING

(a) Using a small screwdriver, pry out the 2 snap rings.

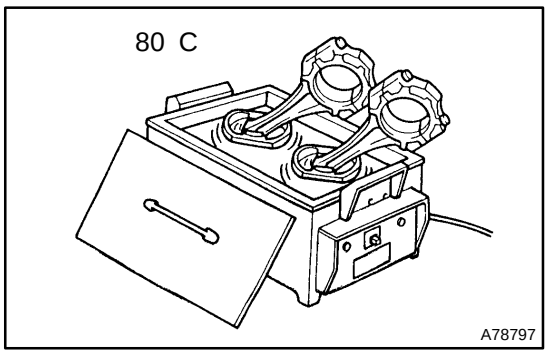

12. REMOVE W/PIN PISTON SUB−ASSY

(a) Gradually heat the piston to approximately 80 C (176 F).

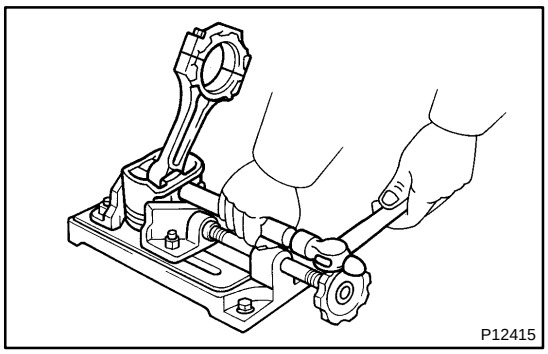

(b) Using a plastic−faced hammer and a brass bar, lightly tap out the piston pin and remove the connecting rod.

HINT:

- The piston and pin are a matched set.
- Store the pistons, the pins, the rings, the connecting rods and the bearings in correct order so that they can be returned to the original locations when re assembling.

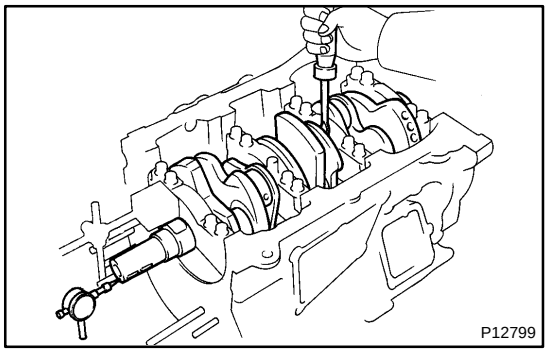

13. INSPECT CRANKSHAFT THRUST CLEARANCE

(a) Using a dial indicator, measure the thrust clearance while prying the crankshaft back and forth with a screwdriver.

Specified thrust clearance:
0.04 to 0.30 mm (0.0016 to 0.0118 in.)

If the thrust clearance is greater than the maximum, replace the thrust washers as a set. Check the crankshaft for wear, repair or replace if necessary.

Thrust washer thickness:
1.93 to 1.98 mm (0.0760 to 0.0780 in.).

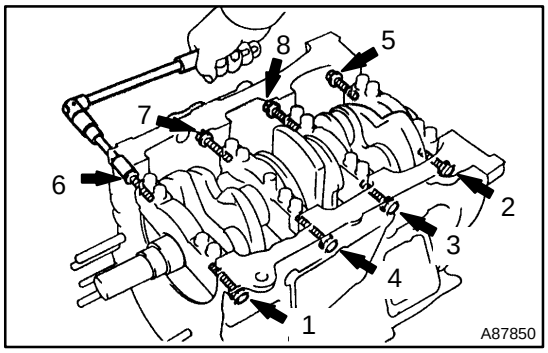

14. CHECK OIL CLEARANCE

(a) Uniformly loosen and remove the 8 main bearing cap bolts and seal washers in the sequence shown in the illustration.

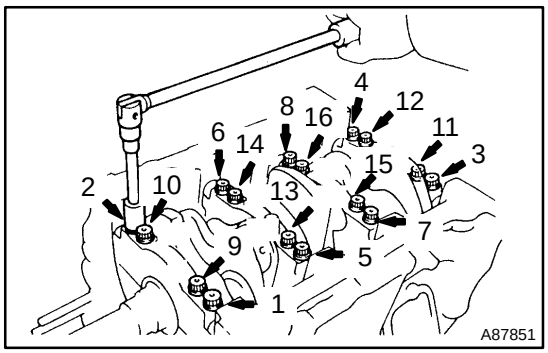

(b) Uniformly loosen and remove the 16 main bearing cap bolts the sequence shown in the illustration.

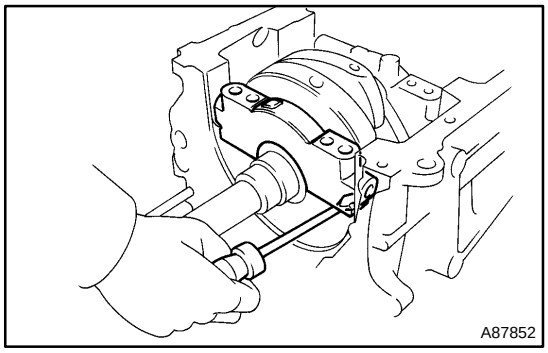

(c) Remove the 4 main bearing caps and 4 lower bearings. Also remove the 2 lower thrust washers, located under the No. 2 main bearing cap.

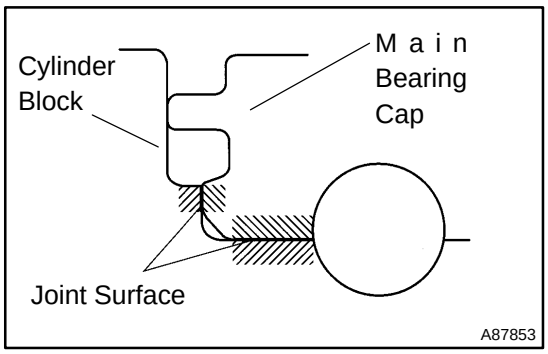

NOTICE:
Using a screwdriver, push up on the cap little by little, alternating from the right and left side until the cap is free. Take care not to damage the contact surfaces of the cap and cylinder block.
HINT:
- Keep the lower bearing and main bearing cap together.
- Arrange the main bearing caps and lower thrust washers in correct order.

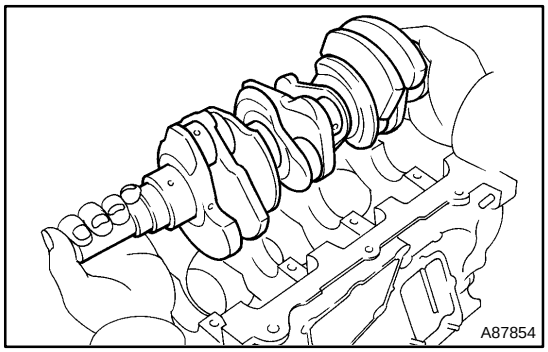

(d) Lift out the crankshaft.
HINT:
Keep the upper bearings together with the cylinder block.
(e) Clean each main journal and bearing.
(f) Check each main journal and bearing for pitting and scratches.
If the journal or bearing is damaged, replace the bearings. If necessary, replace the crankshaft.

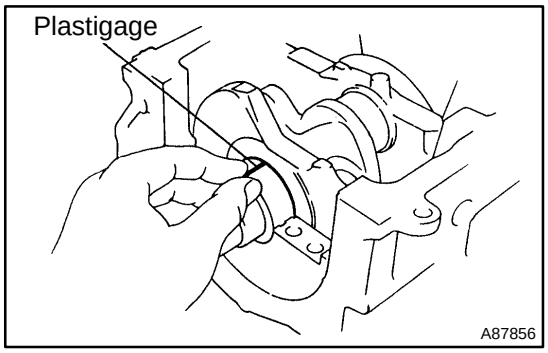

(g) Place the crankshaft on the cylinder block.
(h) Lay a strip of Plastigage across each journal.

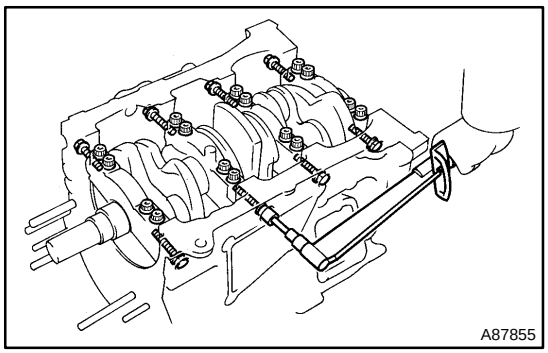

(i) Install the 4 main bearing caps (see step 42).
NOTICE:
Do not turn the crankshaft.
(j) Remove the main bearing caps (see steps (a) to (c)).

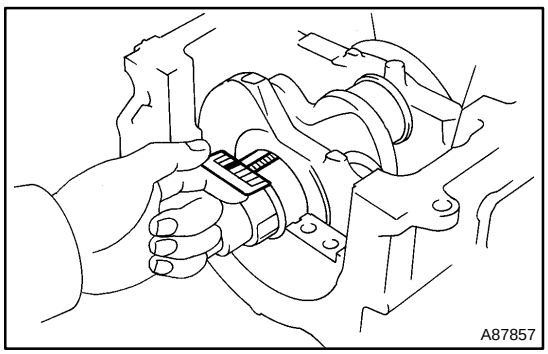

(k) Measure the Plastigage at its widest point.
Specified oil clearance:

No. 1 and No. 4 journals	0.014 to 0.050 mm (0.0006 to 0.0020 in.)
No. 2 and No. 3 journals	0.026 to 0.060 mm (0.0010 to 0.0024 in.)

If the oil clearance is greater than the maximum, replace the bearings. If necessary, replace the crankshaft.

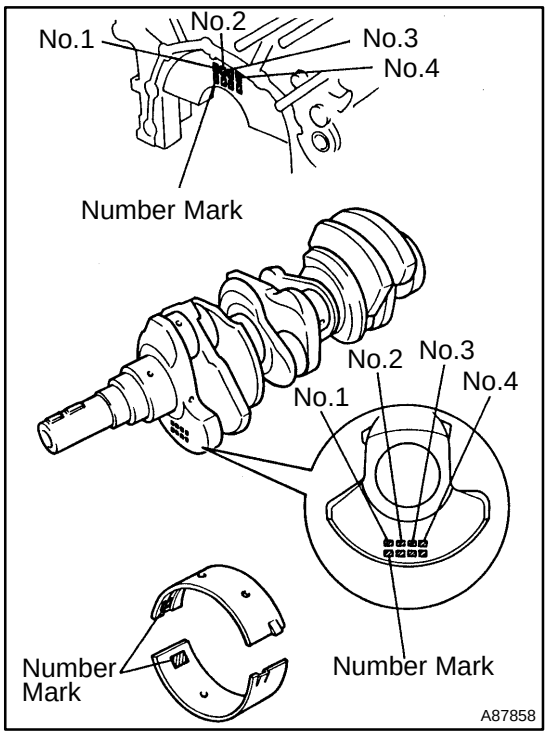

HINT:

If using a bearing, replace it with one that has the same number. If the number of the bearing cannot be determined, select the correct bearing by adding together the numbers imprinted on the cylinder block and crankshaft, then refer to the table on the next page for the appropriate bearing number. The No. 1 and No. 4 journal bearings have 5 standard bearing sizes, marked 3, 4, 5, 6 and 7 accordingly. The No. 2 and No. 3 journal bearings have 5 standard bearing sizes, marked 1, 2, 3, 4 and 5 accordingly.

No. 1 and No. 4 journal bearings

Cylinder block + Crankshaft =	0 to 5	6 to 11	12 to 17	18 to 23	24 to 28
Replacement Bearing	3	4	5	6	7

HINT:

EXAMPLE:

Cylinder block imprinted number mark is 06

Crankshaft imprinted number mark is 08

6 + 8 = 14

Select the bearing marked ”5”

No. 1 and No. 4 journal standard bearings selection chart

Crankshaft number mark	Cylinder block number mark																
	00	01	02	03	04	05	**06**	07	08	09	10	11	12	13	14	15	16
00	3	3	3	3	3	3	4	4	4	4	4	4	5	5	5	5	5
01	3	3	3	3	3	4	4	4	4	4	4	5	5	5	5	5	5
02	3	3	3	3	4	4	4	4	4	4	5	5	5	5	5	5	6
03	3	3	3	4	4	4	4	4	4	5	5	5	5	5	5	6	6
04	3	3	4	4	4	4	4	4	5	5	5	5	5	5	6	6	6
05	3	4	4	4	4	4	4	5	5	5	5	5	5	6	6	6	6
06	4	4	4	4	4	4	5	5	5	5	5	5	6	6	6	6	6
07	4	4	4	4	4	5	5	5	5	5	5	6	6	6	6	6	6
08	4	4	4	4	5	5	**5**	5	5	5	6	6	6	6	6	6	7
09	4	4	4	5	5	5	5	5	5	6	6	6	6	6	6	7	7
10	4	4	5	5	5	5	5	5	6	6	6	6	6	6	7	7	7
11	4	5	5	5	5	5	5	6	6	6	6	6	6	7	7	7	7
12	5	5	5	5	5	5	6	6	6	6	6	6	7	7	7	7	7

EXAMPLE:

Cylinder block ”**06**”, Crankshaft ”**08**” = Use bearing ”**5**”

No. 2 and No. 3 journal bearings

Cylinder block + Crankshaft =	0 to 5	6 to 11	12 to 17	18 to 23	24 to 28
Replace-ment Bearing	3	4	5	6	7

HINT:
EXAMPLE
Cylinder block imprinted number mark is 06
Crankshaft imprinted number mark is 08
6 + 8 = 14
Select the bearing marked ”3”

No.2 and No.3 journal standard bearings selection chart

Crankshaft number mark	Cylinder block number mark																
	00	01	02	03	04	05	**06**	07	08	09	10	11	12	13	14	15	16
00	1	1	1	1	1	1	2	2	2	2	2	2	3	3	3	3	3
01	1	1	1	1	1	2	2	2	2	2	2	3	3	3	3	3	3
02	1	1	1	1	2	2	2	2	2	2	3	3	3	3	3	3	4
03	1	1	1	2	2	2	2	2	2	3	3	3	3	3	3	4	4
04	1	1	2	2	2	2	2	2	3	3	3	3	3	3	4	4	4
05	1	2	2	2	2	2	2	3	3	3	3	3	3	4	4	4	4
06	2	2	2	2	2	2	3	3	3	3	3	3	4	4	4	4	4
07	2	2	2	2	2	3	3	3	3	3	3	4	4	4	4	4	4
08	2	2	2	2	3	3	**3**	3	3	3	4	4	4	4	4	4	5
09	2	2	2	3	3	3	3	3	3	4	4	4	4	4	4	5	5
10	2	2	3	3	3	3	3	3	4	4	4	4	4	4	5	5	5
11	2	3	3	3	3	3	3	4	4	4	4	4	4	5	5	5	5
12	3	3	3	3	3	3	4	4	4	4	4	4	5	5	5	5	5

EXAMPLE:
Cylinder block ”**06**”, Crankshaft ”**08**” = Use bearing ”**3**”

Reference

Item	Mark	Specified Condition
Cylinder block main journal bore diameter (A)	00	66.000 mm (2.5984 in.)
	01	66.001 mm (2.5985 in.)
	02	66.002 mm (2.5985 in.)
	03	66.003 mm (2.5985 in.)
	04	66.004 mm (2.5986 in.)
	05	66.005 mm(2.5986 in.)
	06	66.006 mm (2.5987 in.)
	07	66.007 mm (2.5987 in.)
	08	66.008 mm (2.5987 in.)
	09	66.009 mm (2.5988 in.)
	10	66.010 mm (2.5988 in.)
	11	66.011 mm (2.5989 in.)
	12	66.012 mm (2.5989 in.)
	13	66.013 mm (2.5989 in.)
	14	66.014 mm (2.5990 in.)
	15	66.015 mm (2.5990 in.)
	16	66.016 mm (2.5990 in.)
Crankshaft main journal diameter (B)	00	61.000 mm (2.4016 in.)
	01	60.999 mm (2.4015 in.)
	02	60.998 mm (2.4015 in.)
	03	60.997 mm (2.4015 in.)
	04	60.996 mm (2.4014 in.)
	05	60.995 mm (2.4014 in.)
	06	60.994 mm (2.4013 in.)
	07	60.993 mm (2.4012 in.)
	08	60.992 mm (2.4012 in.)
	09	60.991 mm (2.4012 in.)
	10	60.990 mm (2.4012 in.)
	11	60.989 mm (2.4011 in.)
	12	60.988 mm (2.4011 in.)
Standard bearing center wall thickness	1	2.486 to 2.489 mm (0.0979 to 0.0980 in.)
	2	2.489 to 2.492 mm (0.0980 to 0.0981 in.)
	3	2.492 to 2.495 mm (0.0981 to 0.0982 in.)
	4	2.495 to 2.498 mm (0.0982 to 0.0983 in.)
	5	2.498 to 2.501 mm (0.0983 to 0.0985 in.)
	6	2.501 to 2.504 mm (0.0985 to 0.0986 in.)
	7	2.504 to 2.507 mm (0.0986 to 0.0987 in.)

(l) Completely remove the Plastigage.

15. REMOVE CRANKSHAFT

(a) Lift the crankshaft.

(b) Remove the 4 upper main bearings and 2 upper thrust washers from the cylinder block.

HINT:

Arrange the main bearing caps, bearings and thrust washers in the correct order.

16. REMOVE CRANKSHAFT THRUST WASHER SET

17. REMOVE CRANKSHAFT BEARING

18. CLEAN CYLINDER BLOCK

NOTICE:

If the cylinder is washed at high temperatures, the cylinder liner sticks out beyond the cylinder block. Always wash the cylinder block at a temperature of 45 C (113 F) or less.

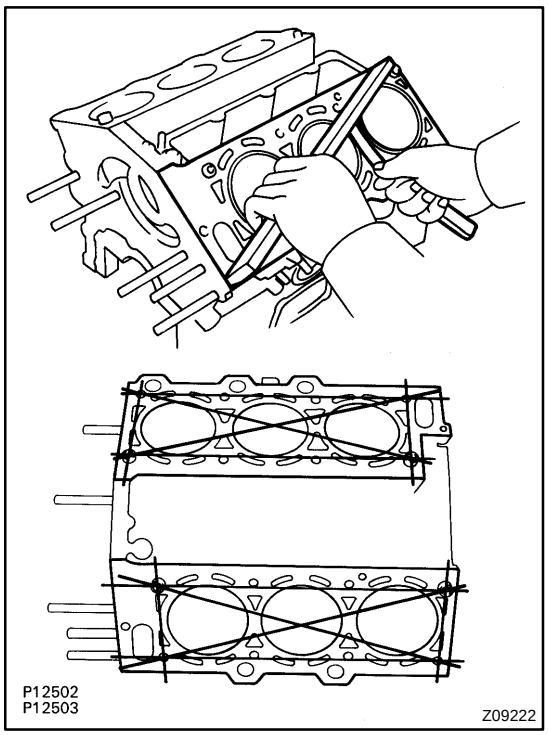

19. INSPECT CYLINDER BLOCK FOR FLATNESS

(a) Using a precision straight edge and feeler gauge, measure the surface contacting the cylinder head gasket for warpage.

Maximum warpage: 0.05 mm (0.0020 in.)

If the warpage is greater than the maximum, replace the cylinder block.

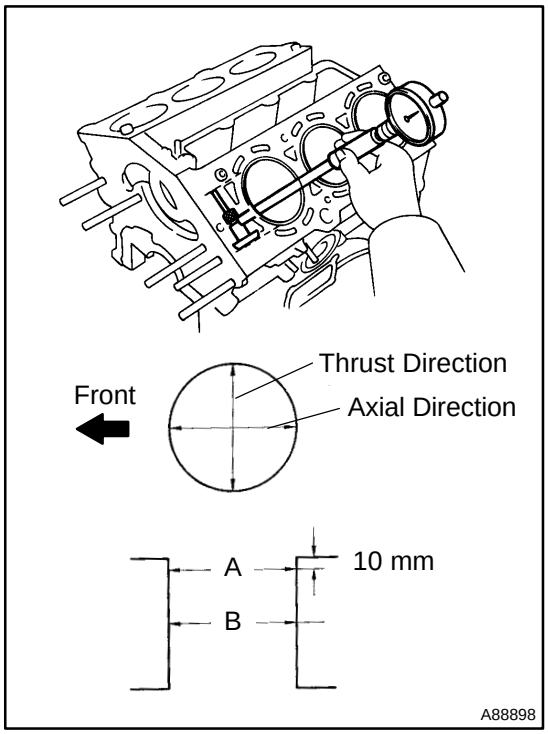

20. INSPECT CYLINDER BORE

(a) Using a cylinder gauge, measure the cylinder bore diameter at positions A and B in the thrust and axial directions.

Specified diameter:

Item	Specified Condition
1MZ−FE	87.500 to 87.632 mm (3.4449 to 3.4501 in.)
3MZ−FE	92.000 to 92.132 mm (3.6220 to 3.6272 in.)

If the average of the measured diameters is greater than the maximum, replace the cylinder block.

21. INSPECT W/PIN PISTON SUB−ASSY

(a) 1MZ−FE:

Using a micrometer, measure the diameter at right angles to the piston pin center line and the distance from the piston head.

Distance:

Item	Specified Condition
1MZ−FE for AISIN made	23.2 mm (0.913 in.)
1MZ−FE for MAHLE made	41.2 mm (1.922 in.)

Piston diameter:

Item	Specified Condition
1MZ−FE for AISIN made	87.406 to 87.416 mm (3.4412 to 3.4416 in.)
1MZ−FE for MAHLE made	87.453 to 87.467 mm (3.4430 to 3.4436 in.)

HINT:

The shape of the piston varies for the RH and LH banks. The RH piston is marked with ”R”, the LH piston with ”L”.

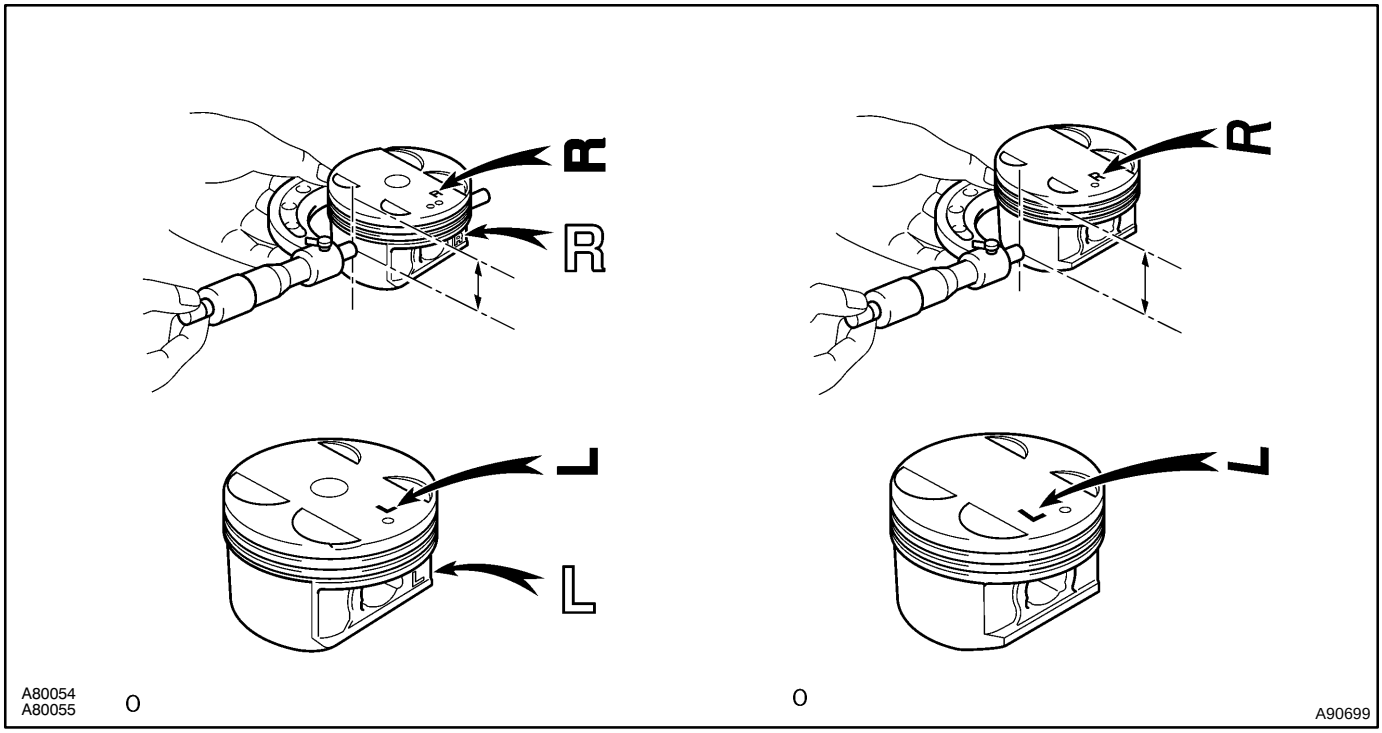

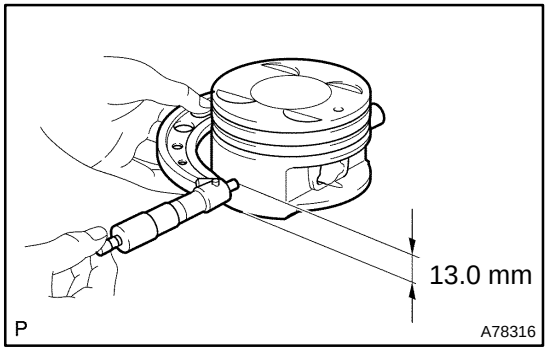

(b) 3MZ−FE:

Using a micrometer, measure a diameter at right angles to the piston pin center line and the distance from the piston bottom.

Distance: 13.0 mm (0.512 in.)

Piston diameter:

91.953 to 91.967 mm (3.6202 to 3.6207 in.)

22. INSPECT PISTON OIL CLEARANCE

(a) Subtract the piston diameter measurement from the cylinder bore diameter measurement.
Specified oil clearance: 0.033 to 0.130 mm (0.0013 to 0.0051 in.)

Item	Specified Condition:
1MZ−FE for AISIN made	0.084 to 0.130 mm (0.0033 to 0.0051 in.)
1MZ−FE for MAHLE made	0.033 to 0.130 mm (0.0013 to 0.0051 in.)
3MZ−FE	0.033 to 0.130 mm (0.0013 to 0.0051 in.)

If the oil clearance is greater than the maximum, replace all the 6 pistons. If necessary, replace the cylinder block.

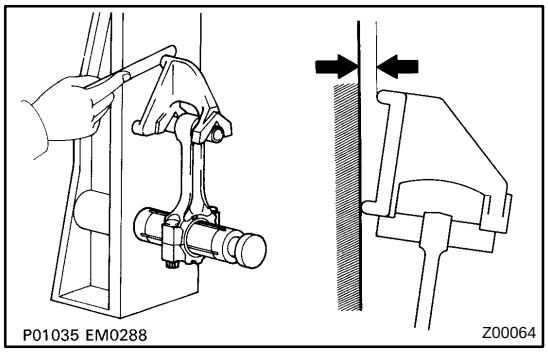

23. INSPECT CONNECTING ROD SUB−ASSY

(a) Using a rod aligner and feeler gauge, check the connecting rod alignment.
(1) Check for misalignment.
Maximum misalignment:
0.05 mm (0.0020 in.) per 100 mm (3.94 in.)

If misalignment is greater than the maximum, replace the connecting rod assembly.

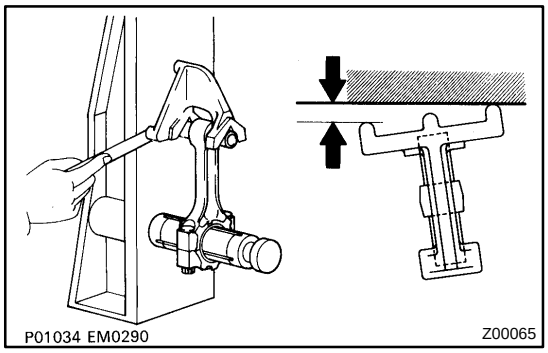

(2) Check for twist.
Maximum twist:
0.15 mm (0.0059 in.) per 100 mm (3.94 in.)

If the twist is greater than the maximum, replace the connecting rod assembly.

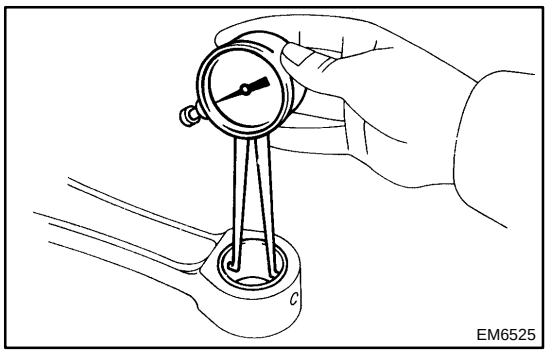

24. INSPECT PISTON PIN OIL CLEARANCE

(a) Using a caliper gauge, measure the inside diameter of the connecting rod bushing.
Bushing inside diameter:
22.005 to 22.014 mm (0.8663 to 0.8667 in.)

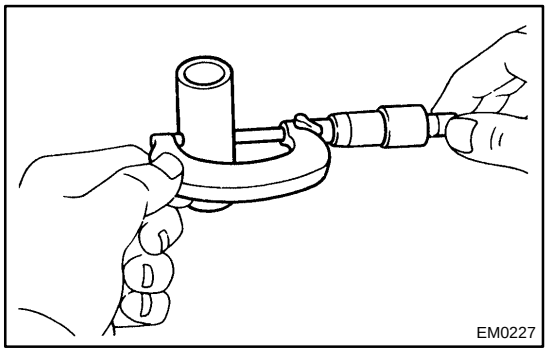

(b) Using a micrometer, measure the piston pin diameter.
Piston pin diameter:
21.997 to 22.006 mm (0.8660 to 0.8664 in.)

(c) Subtract the piston pin diameter measurement from the bushing inside diameter measurement.
Specified oil clearance:
0.005 to 0.050 mm (0.0002 to 0.0020 in.)

If the oil clearance is greater than the maximum, replace the bushing. If necessary, replace the piston and the piston pin together.

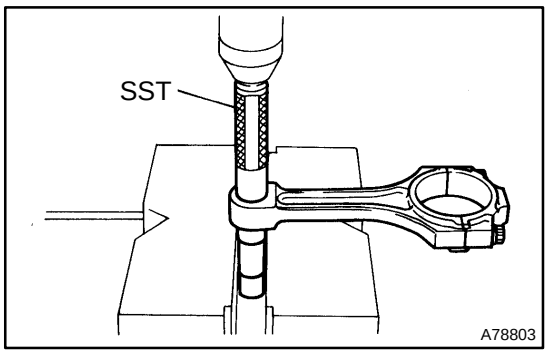

25. REMOVE CONNECTING ROD SMALL END BUSH

(a) Using SST and a press, press out the bushing.
SST 09222−30010

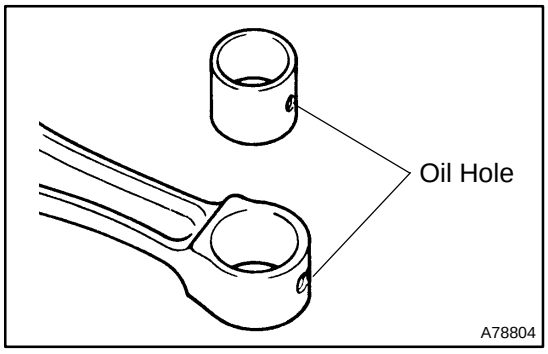

26. INSTALL CONNECTING ROD SMALL END BUSH

(a) Align the oil holes of a new bushing and the connecting rod.

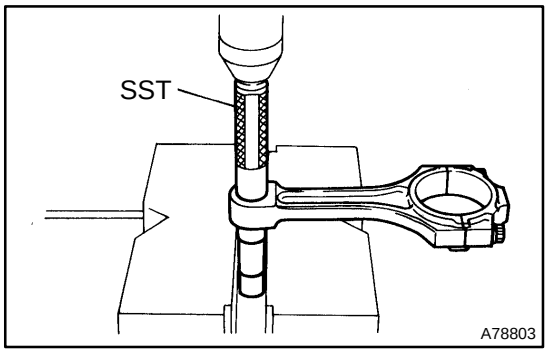

(b) Using SST and a press, press in the bushing.
SST 09222−30010

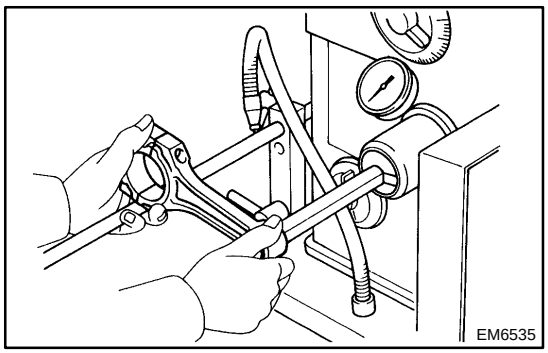

(c) Using a pin hole grinder, hone the bushing to obtain the standard specified clearance between the bushing and piston pin.
Standard oil clearance:
0.005 to 0.011 mm (0.0002 to 0.0004 in.)

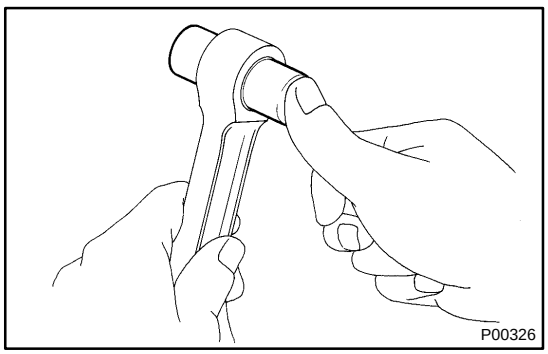

(d) Check that the piston pin fits at normal room temperature. Coat the piston pin with engine oil, and push it into the connecting rod with your thumb.

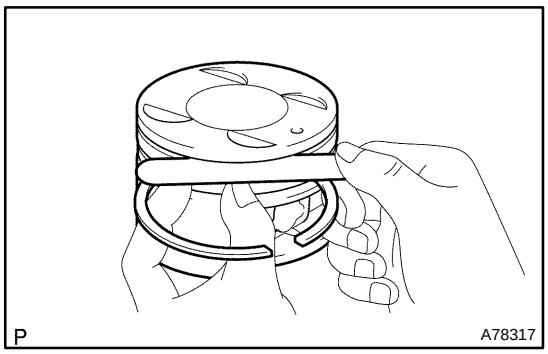

27. INSPECT RING GROOVE CLEARANCE

(a) Using a feeler gauge, measure the clearance between new piston ring and the wall of the ring groove.

Ring groove clearance:

1MZ−FE

Item	Specified Condition
No. 1	0.02 to 0.07 mm (0.0008 to 0.0028 in.)
No. 2	0.02 to 0.06 mm (0.0008 to 0.0024 in.)
Oil	0.04 to 0.12 mm (0.0016 to 0.0047 in.)

3MZ−FE:

Item	Specified Condition
No. 1	0.03 to 0.08 mm (0.0012 to 0.0031 in.)
No. 2	0.02 to 0.06 mm (0.0008 to 0.0024 in.)
Oil	0.03 to 0.11 mm (0.0012 to 0.0043 in.)

If the clearance is not as specified, replace the piston.

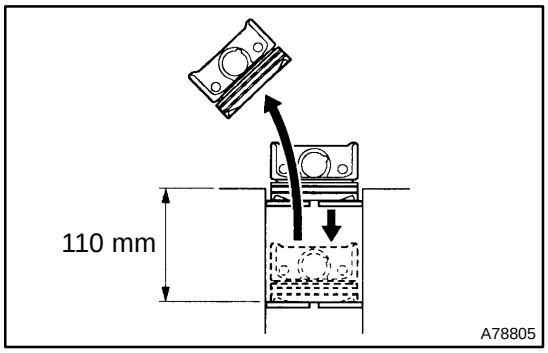

28. INSPECT PISTON RING END GAP

(a) Using a piston, push the piston ring a little beyond the bottom of the ring travel, 110 mm (4.33 in.) from the top of the cylinder block.

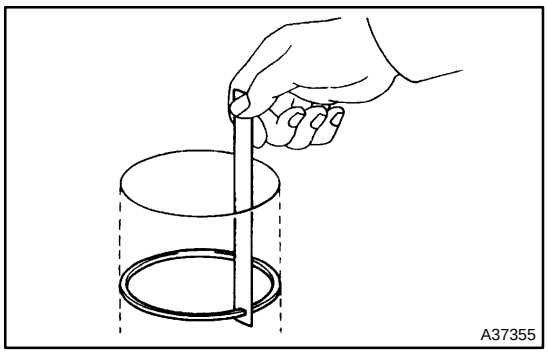

(b) Using a feeler gauge, measure the end gap.

Specified end gap:

1MZ−FE

Item	Specified Condition
No. 1	0.25 to 0.95 mm (0.0098 to 0.0374 in.)
No. 2	0.35 to 1.05 mm (0.0138 to 0.0413 in.)
Oil (Side rail)	0.15 to 1.00 mm (0.0059 to 0.0394 in.)

3MZ−FE:

Item	Specified Condition
No. 1	0.30 to 0.95 mm (0.0118 to 0.0374 in.)
No. 2	0.50 to 1.05 mm (0.0197 to 0.0413 in.)
Oil (Side rail)	0.15 to 1.00 mm (0.0059 to 0.0394 in.)

If the end gap is greater than the maximum, replace the piston ring.

If the end gap is greater than the maximum even with a new piston ring, replace the cylinder block.

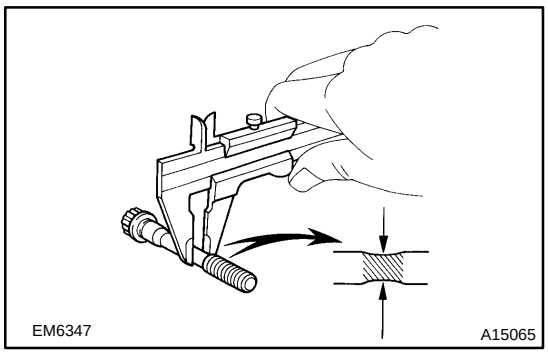

29. INSPECT CONNECTING ROD BOLT

(a) Using a vernier caliper, measure the tension portion diameter of the bolt.

Specified diameter:
7.2 to 7.6 mm (0.283 to 0.299 in.)

If the diameter is less than the minimum, replace the bolt.

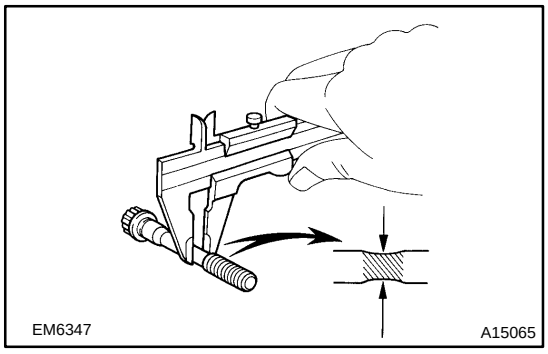

30. INSPECT CRANKSHAFT BEARING CAP SET BOLT

(a) Using a dial indicator and V−blocks, measure the runout as shown in the illustration.

Maximum circle runout: 0.06 mm (0.0024 in.)

If the circle runout is greater than the maximum, replace the crankshaft.

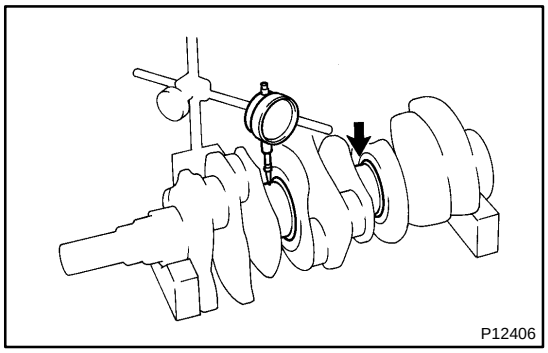

31. INSPECT CRANKSHAFT

(a) Using a dial indicator and V−blocks, measure the runout as shown in the illustration.

Maximum circle runout: 0.06 mm (0.0024 in.)

If the circle runout is greater than the maximum, replace the crankshaft.

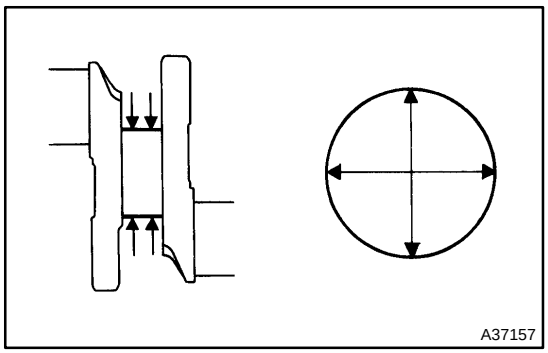

(b) Using a micrometer, measure the diameter of each main journal.

Diameter: 60.988 to 61.000 mm (2.4011 to 2.4016 in.)

If the diameter is not as specified, check the oil clearance (see step 7).

If necessary, replace the crankshaft.

(c) Check each main journal for taper and out−of−round as shown in the illustration.

Maximum taper and out−of−round:
0.02 mm (0.0008 in.)

If the taper and out−of−round is greater than the maximum, replace the crankshaft.

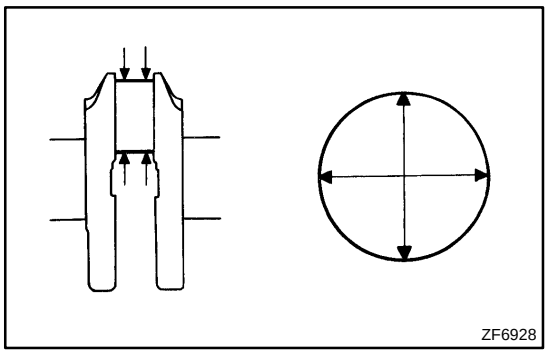

(d) Using a micrometer, measure the diameter of each crank pin.

Diameter: 52.992 to 53.000 mm (2.0863 to 2.0866 in.)

If the diameter is not as specified, check the oil clearance (see step 7).

(e) Check each crank pin for taper and out−of−round as shown in the illustration.

Maximum taper and out−of−round:
0.02 mm (0.0008 in.)

If the taper and out−of−round is greater than the maximum, replace the crankshaft.

32. INSTALL STUD BOLT

Front Side

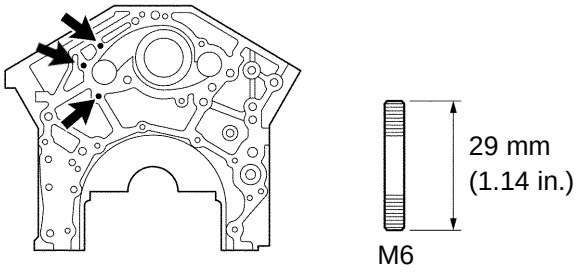

Torque: 6.0 N·m (60 kgf·cm, 53 in.·lbf)

Front Side

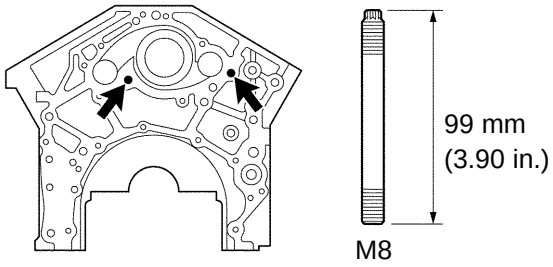

Torque: 15 N·m (145 kgf·cm, 11 ft·lbf)

Front Side

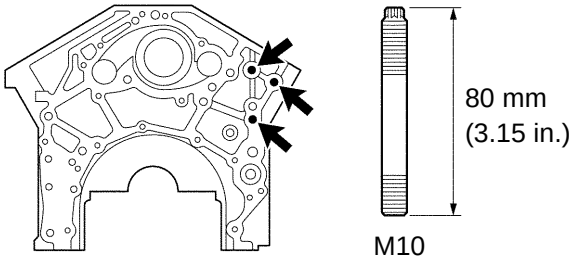

Torque: 21 N·m (220 kgf·cm, 15 ft·lbf)

Left Side

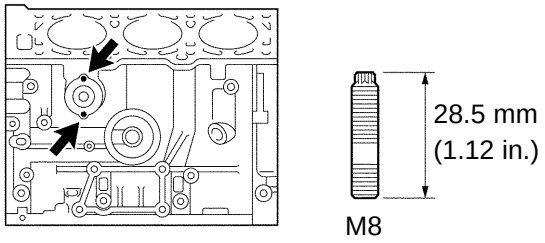

Torque: 7.0 N·m (70 kgf·cm, 62 in.·lbf)

Top Side

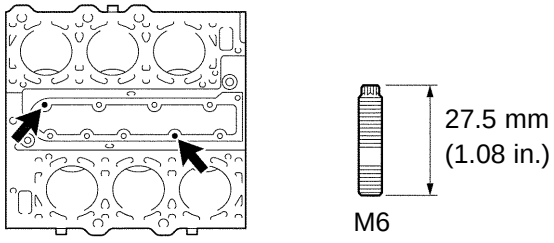

Torque: 4.0 N·m (40 kgf·cm, 35 in.·lbf)

Top Side

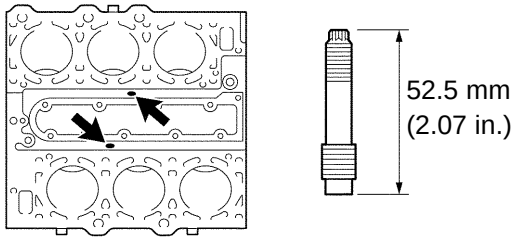

Torque: 12 N·m (122 kgf·cm, 9 ft·lbf)

P

A78318

33. INSTALL STRAIGHT PIN

Front Side

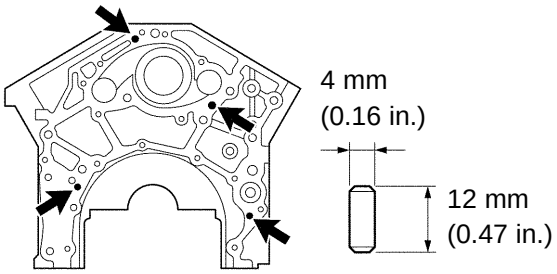

Protrusion Height:
6 mm (0.24 in.)

Right Side (FF)

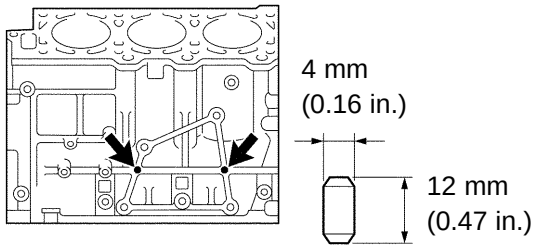

Protrusion Height:
6 mm (0.24 in.)

Top Side

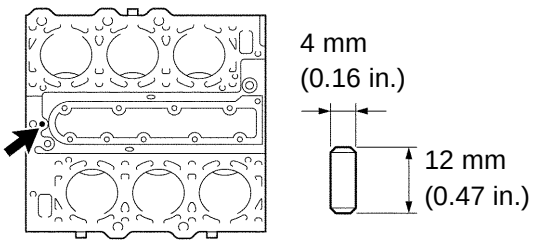

Protrusion Height:
6 mm (0.24 in.)

Bottom Side

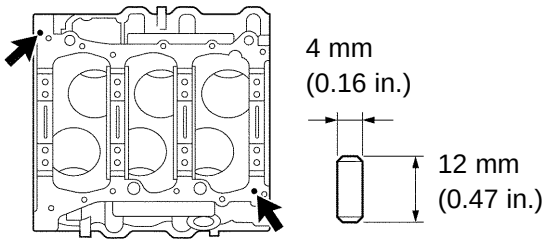

Protrusion Height:
6 mm (0.24 in.)

Backside

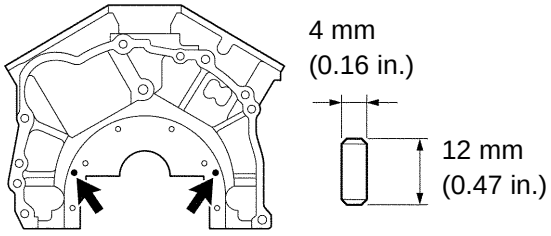

Protrusion Height:
6 mm (0.24 in.)

Backside

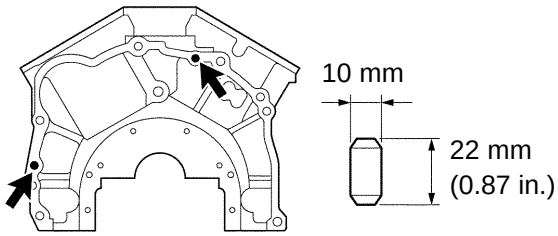

Protrusion Height:
11 mm (0.43 in.)

P

A78319

34. INSTALL RING PIN

Top Side

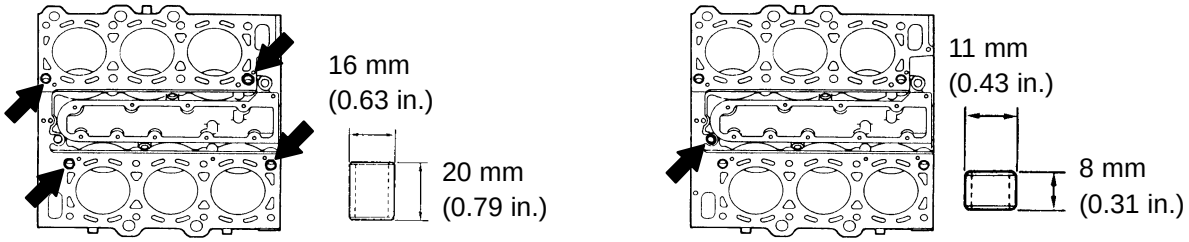

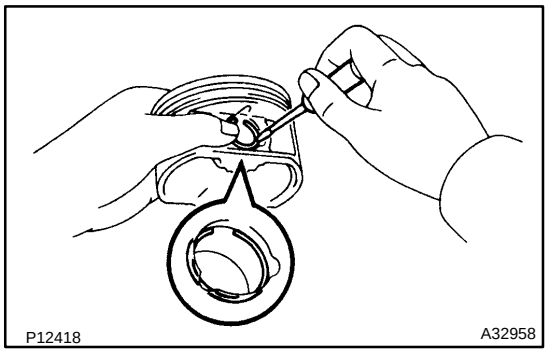

35. INSTALL PISTON PIN HOLE SNAP RING

(a) Using a small screwdriver, install a new snap ring at one end of the piston pin hole.

HINT:

Be sure that the end gap of the snap ring is not aligned with the pin hole cutout portion of the piston.

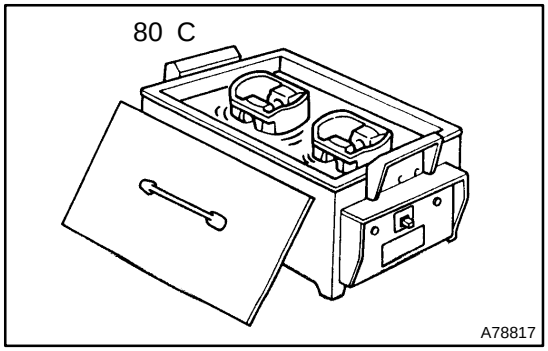

36. INSTALL W/PIN PISTON SUB−ASSY

(a) Gradually heat the piston to about 80 C (176 F).

(b) Coat the piston pin with engine oil.
(c) Align the front marks of the piston and connecting rod, and push in the piston pin with your thumb until the pin contacts the snap ring.

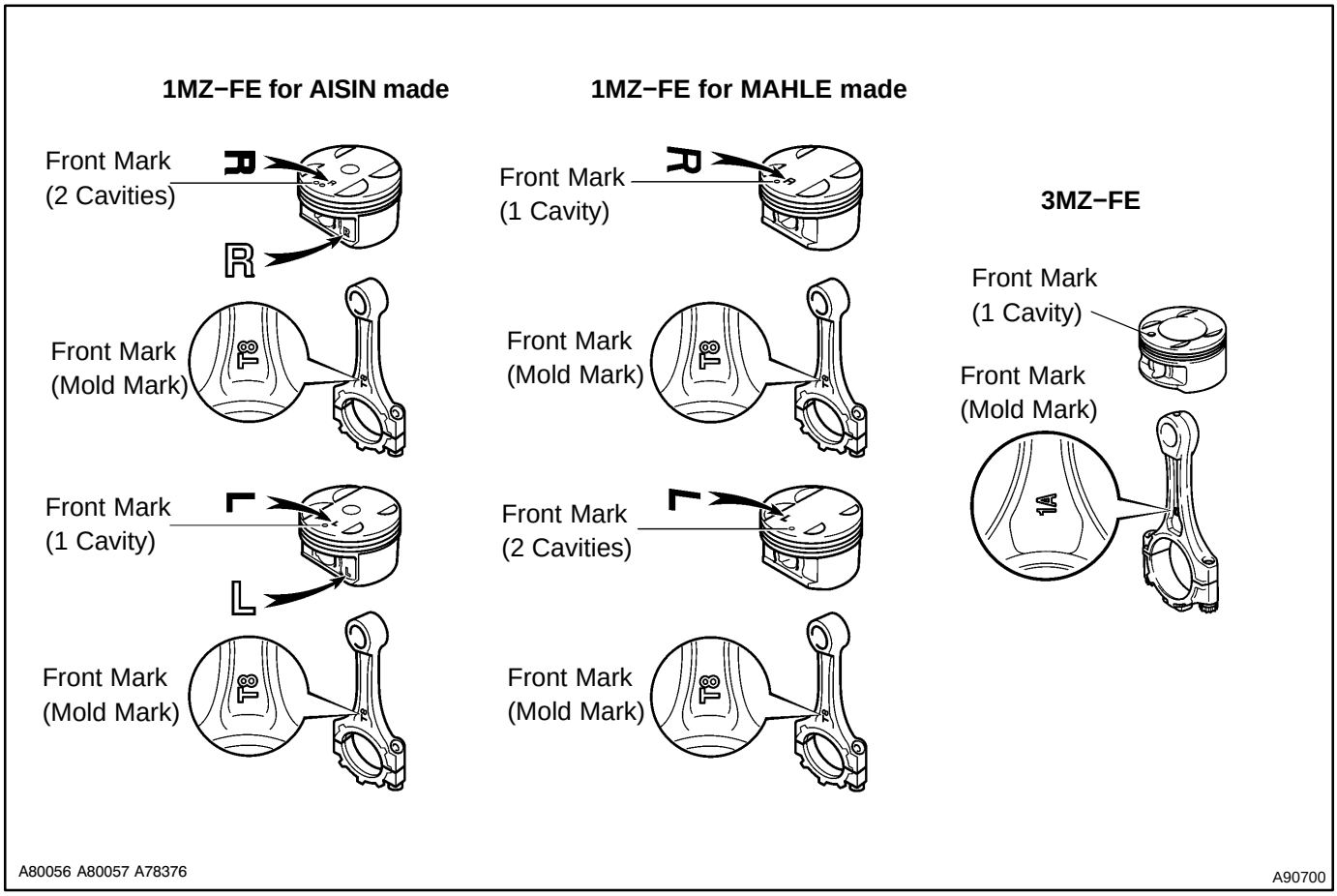

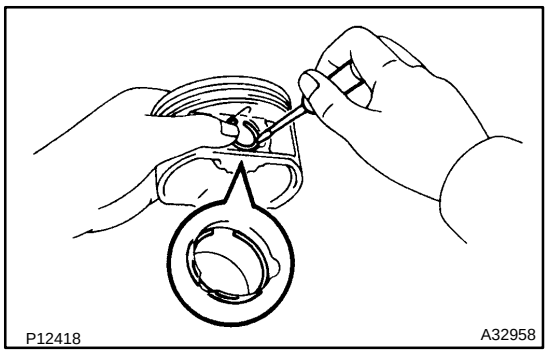

37. INSTALL PISTON PIN HOLE SNAP RING

(a) Using a small screwdriver, install a new snap ring on the other end of the piston pin hole.

HINT:

Be sure that the end of gap of the snap ring is not aligned with the pin hole cutout portion of the piston.

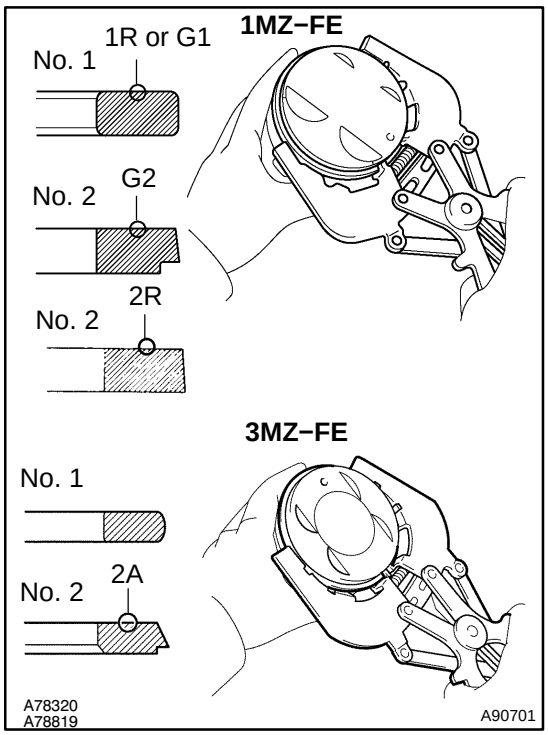

38. INSTALL PISTON RING SET

(a) Install the oil ring expander and the 2 side rails by hand.

(b) Using a piston ring expander, install the 2 compression rings.

HINT:

The No. 1 and No. 2 compression rings are installed with code mark faced upward as shown in the illustration.

Code mark:

1MZ−FE:

Item	Code Mark
No. 1	1R or G1
No. 2	2R or G1

3MZ−FE

Item	Code Mark
No. 2	2A

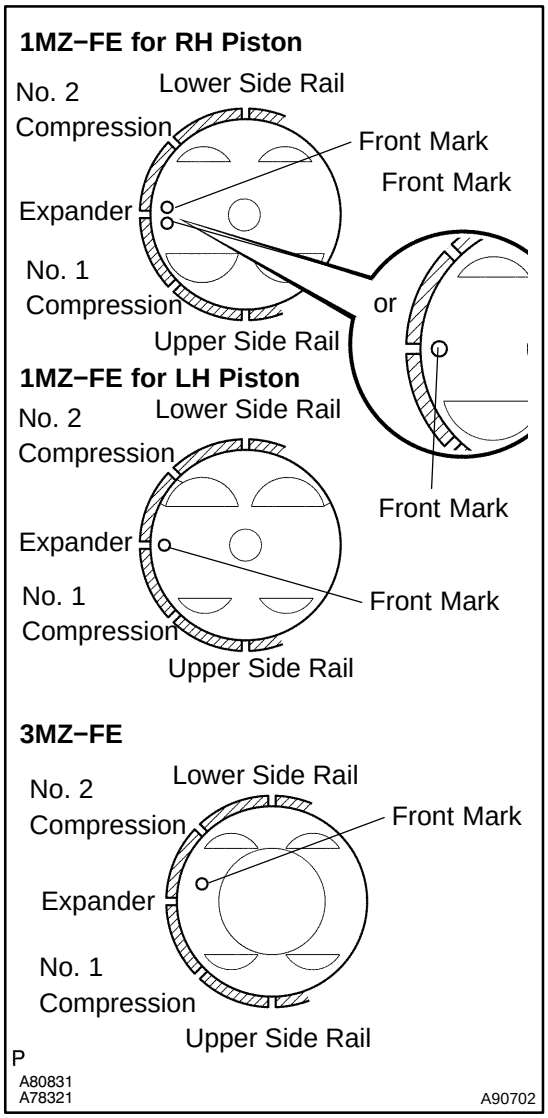

(c) Position the piston rings so that the ring ends are arranged as shown in the illustration.

NOTICE:

Do not align the ring ends.

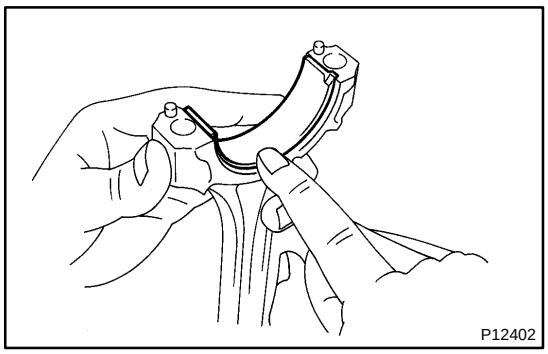

39. INSTALL CONNECTING ROD BEARING

(a) Align the key of the bearing with the keyway of the connecting rod or connecting cap.

NOTICE:

Clean the backside of the bearing and the bearing surface of the connecting rod. The surface should be free of dust and oils.

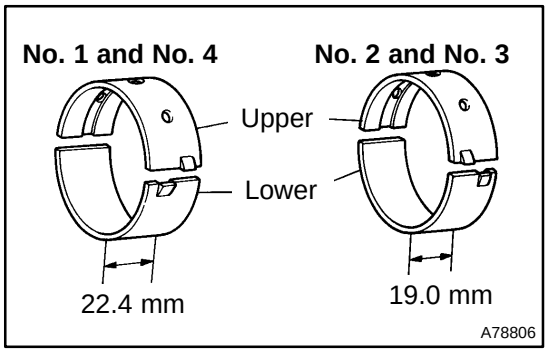

40. INSTALL CRANKSHAFT BEARING

HINT:

Main bearings come in width of 22.4 mm (0.882 in.) and 19.0 mm (0.748 in.). Install the 22.4mm (0.882 in.) bearings in the No. 1 and No. 4 cylinder block journal positions with the main bearing cap. Install the 19.0 mm (0.748 in.) bearings in the No. 2 and No. 3 positions.

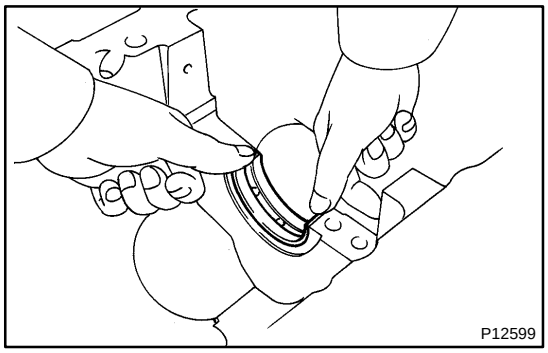

(a) Align the key of the bearing with the keyway of the cylinder block, and push in the 4 upper bearings.

NOTICE:

Do not apply engine oil to the bearing and its contact surface.

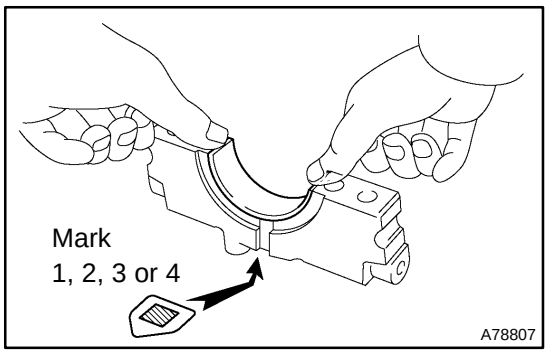

(b) Align the key of the bearing with the keyway of the main bearing cap, and push in the 4 lower bearings.

NOTICE:

Do not apply engine oil to the bearing and its contact surface.

HINT:

A number is marked on each main bearing cap to indicate the installation position.

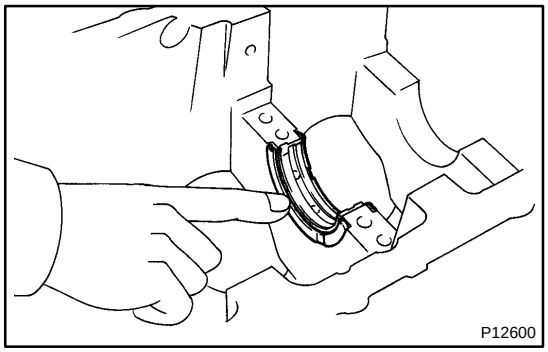

41. INSTALL CRANKSHAFT THRUST WASHER SET

(a) Install the 2 thrust washers under the No. 2 journal position of the cylinder block with the oil grooves facing outward.

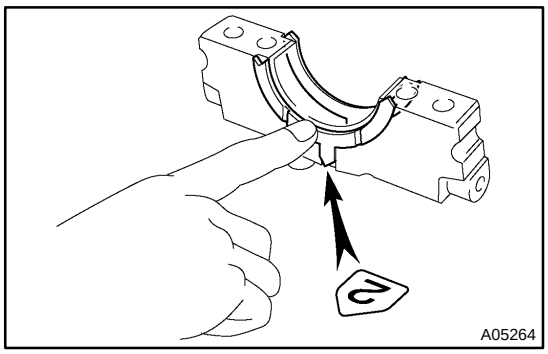

(b) Install the 2 thrust washers on the No. 2 bearing cap with the grooves facing outward.

42. INSTALL CRANKSHAFT

(a) Apply engine oil to the upper bearing and install the crankshaft on the cylinder block.

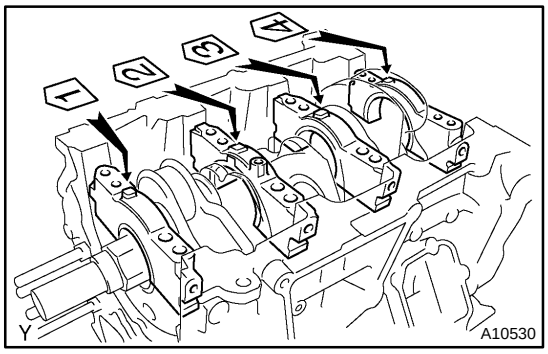

(b) Examine the front marks and numbers and install the bearing caps on the cylinder block.
(c) Apply a light coat of engine oil on the threads of the bearing cap bolts.
(d) Temporarily install the 8 main bearing cap bolts to the inside positions.

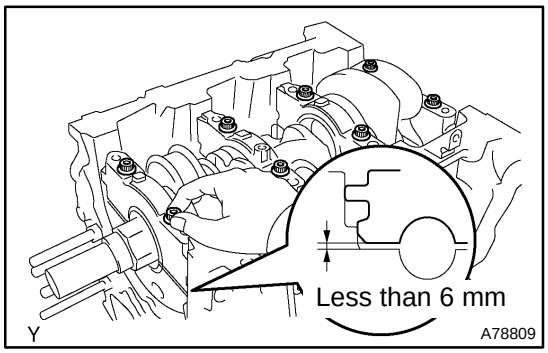

(e) Install the main bearing cap by hand using the inner bolt as a guide. Stop the main bearing cap is about 6 mm (0.23 in.) away from contacting with the block.

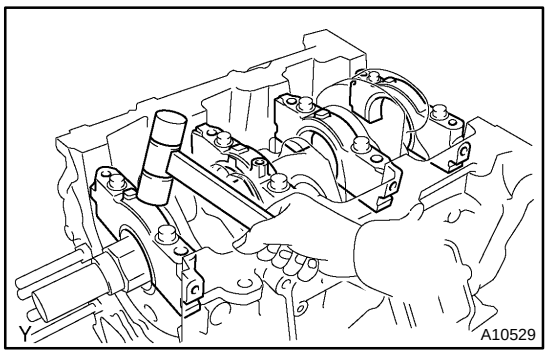

(f) Using a plastic−faced hammer, lightly tap the bearing cap to ensure a proper fit.
(g) Apply a light coat of engine oil on the threads of the main bearing cap bolts.

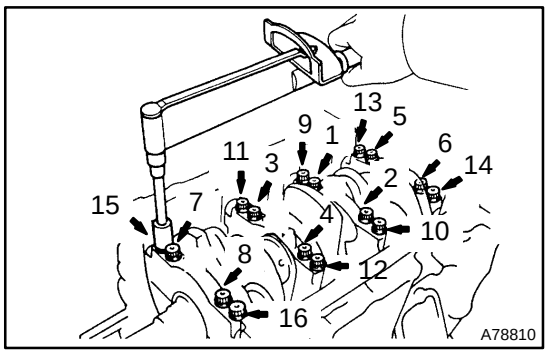

(h) Uniformly install and tighten the 16 main bearing cap bolts in the sequence shown in the illustration.
Torque: 22 N·m (224 kgf·cm, 16 ft·lbf)

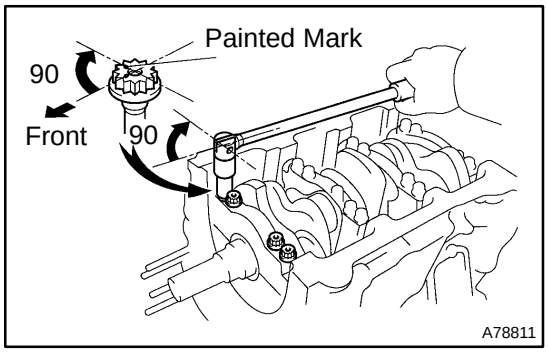

(i) Mark the front side of the bearing cap bolts with paint.
(j) Retighten the bearing cap bolts by 90 in the same sequence as step (h).
(k) Check that each painted mark is now at a 90 angle to the front.
(l) Check that the crankshaft turns smoothly.
(m) Install a new seal washer to the main bearing cap bolt

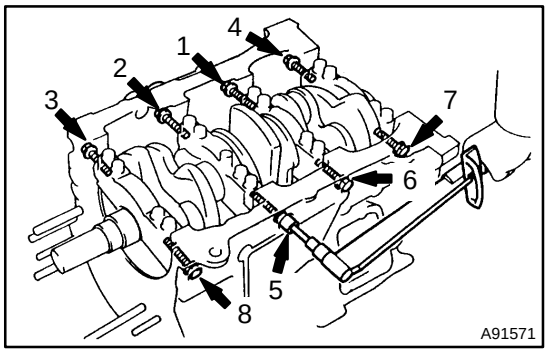

(n) Uniformly install and tighten the 8 main bearing cap bolts in the sequence shown in the illustration.
Torque: 27 N·m (275 kgf·cm, 20 ft·lbf)

HINT:
Use the short bolt for the marked position (arrow).

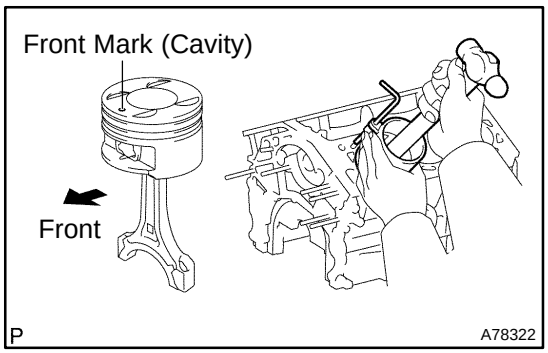

43. INSTALL PISTON SUB−ASSY W/CONNECTING ROD

(a) Apply engine oil to the cylinder walls, the pistons, and the surfaces of connecting rod bearings.
(b) Check the position of the piston ring ends.
(c) Using a piston ring compressor, push the correctly numbered piston and connecting rod assemblies into each cylinder with the front mark of the piston facing forward.

NOTICE:

Match the numbered connecting rod cap with the connecting rod.

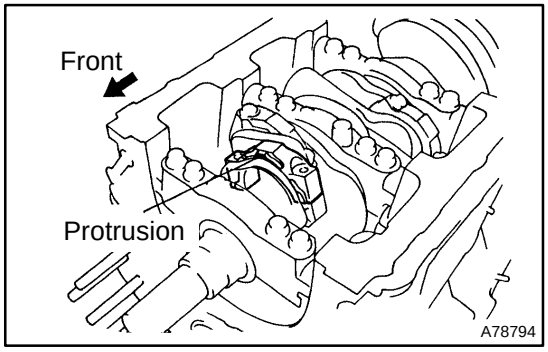

(d) Check that the protrusion of the connecting rod cap is facing the correct direction.
(e) Apply a light coat of engine oil on the threads of the connecting rod cap bolts.

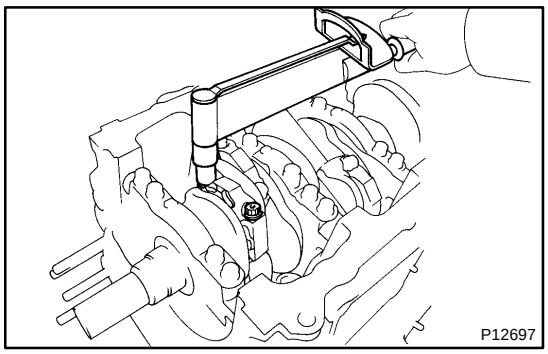

(f) Tighten the bolts in several steps by the specified torque.
Torque: 25 N·m (250 kgf·cm, 18 ft·lbf)

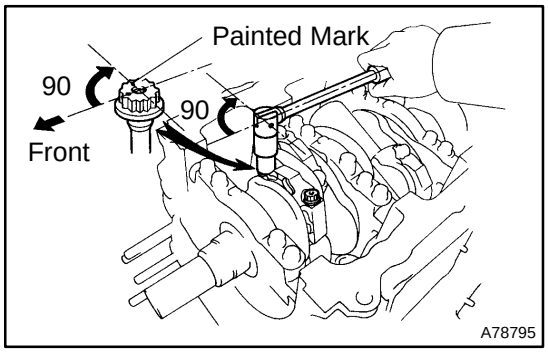

(g) Mark the front side of each connecting cap bolt with paint.
(h) Retighten the cap bolts by 90 as shown in the illustration.
(i) Check that the crankshaft turns smoothly.

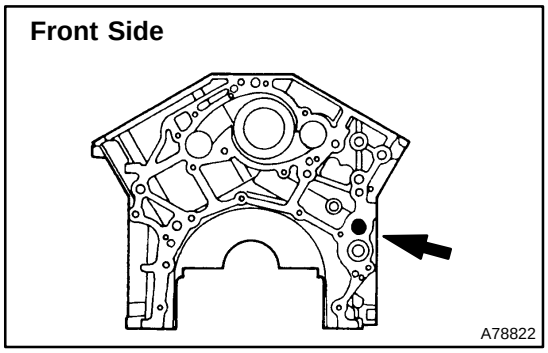

44. INSTALL CYLINDER BLOCK W/HEAD STRAIGHT SCREW NO.1 PLUG

(a) Using a socket hexagon wrench 10, install a new gasket and the screw plug.
Torque: 30 N·m (306 kgf·cm, 22 ft·lbf)

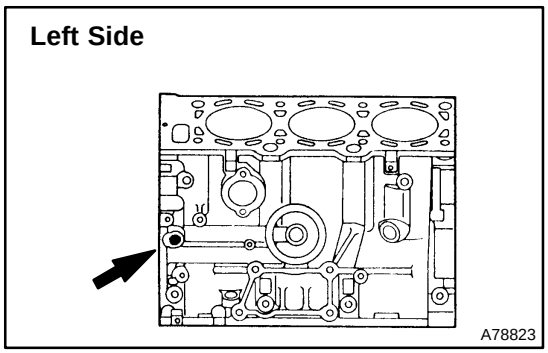

45. INSTALL CYLINDER BLOCK W/HEAD STRAIGHT SCREW NO.2 PLUG

(a) Using a socket hexagon wrench 10, install a new gasket and the screw plug.
Torque: 30 N·m (306 kgf·cm, 22 ft·lbf)

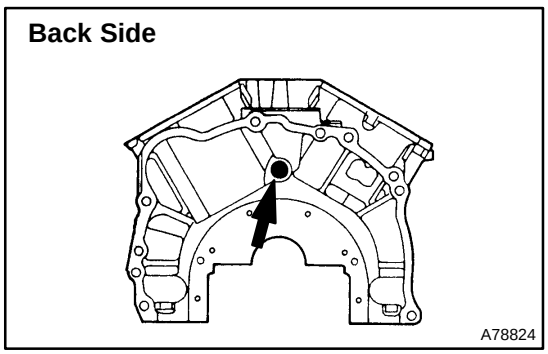

46. INSTALL CYLINDER BLOCK W/HEAD STRAIGHT SCREW NO.3 PLUG

(a) Using a socket hexagon wrench 10, install a new gasket and the screw plug.
Torque: 50 N·m (510 kgf·cm, 37 ft·lbf)

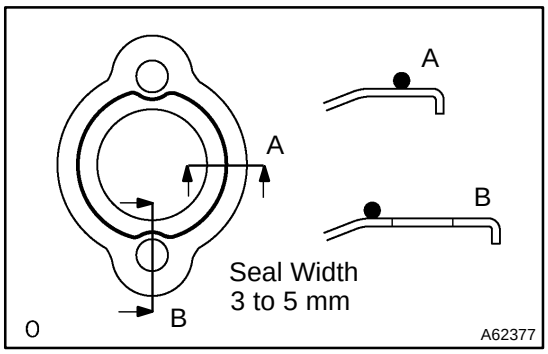

47. INSTALL WATER SEAL PLATE

(a) Remove any old seal packing from the contact surface.

(b) Apply a continuous bead of seal packing (diameter 3 to 5 mm (0.12 to 0.20 in.)) as shown in the illustration.

Seal packing: Part No. 08826−00100 or equivalent

NOTICE:

- **Remove any oil from the contact surface.**
- **Install the seal plate within 3 minutes after applying seal packing.**
- **Do not expose the seal to engine oil for at least 2 hours after installing.**

(c) Install the seal plate with the 2 nuts.

Torque: 18 N·m (184 kgf·cm, 13 ft·lbf)

48. INSTALL CYLINDER BLOCK WATER DRAIN COCK SUB−ASSY

(a) Apply adhesive to 2 or 3 threads of the drain cock end.

Adhesive:
Part No. 08833−00070, THREE BOND 1324 or equivalent

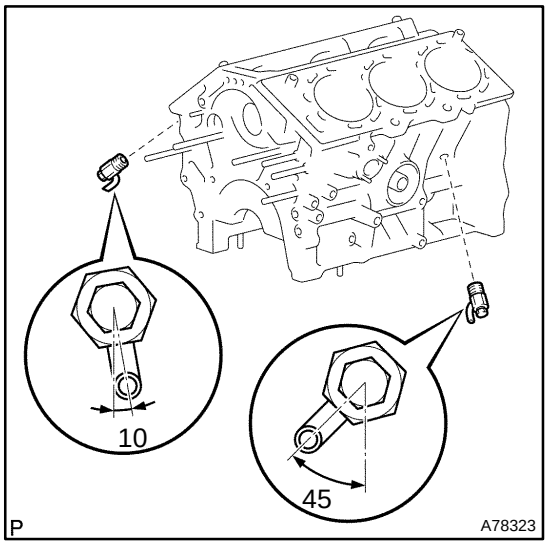

(b) After applying the specified torque, rotate the drain cock clockwise as shown in the illustration.

Torque: 39 N·m (398 kgf·cm, 29 ft·lbf)

NOTICE:

- **Install the drain cock within 3 minutes after applying adhesive.**
- **Do not expose the seal to coolant for at least 1 hour after installing.**
- **Do not rotate the drain cock more than 1 revolution (360) after tightening the drain cock with the specified torque.**
- **Do not loosen the drain cock after setting it correctly.**

EXHAUST PIPE ASSY (2AZ−FE)(From July, 2003)

150B4−01

COMPONENTS

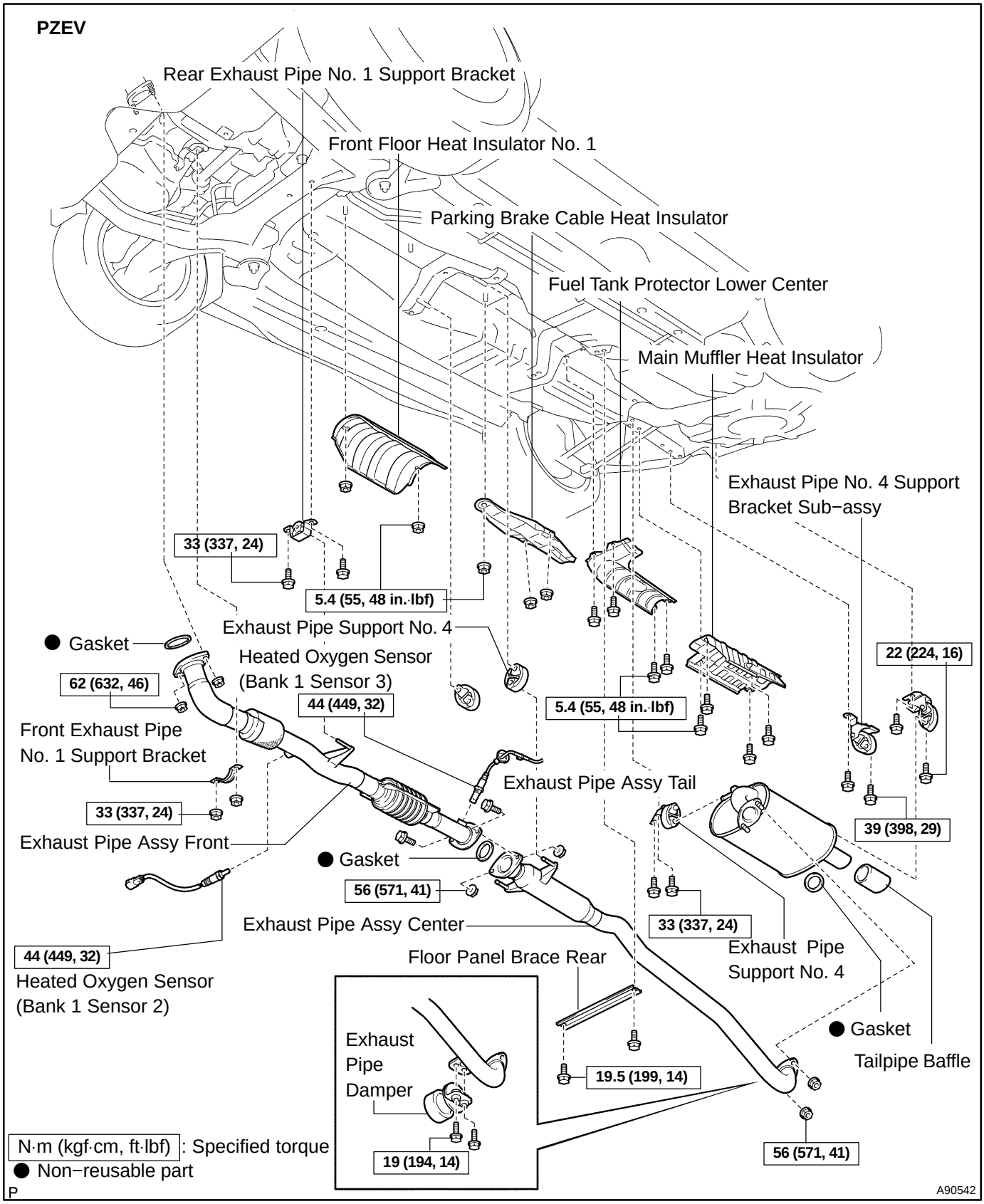

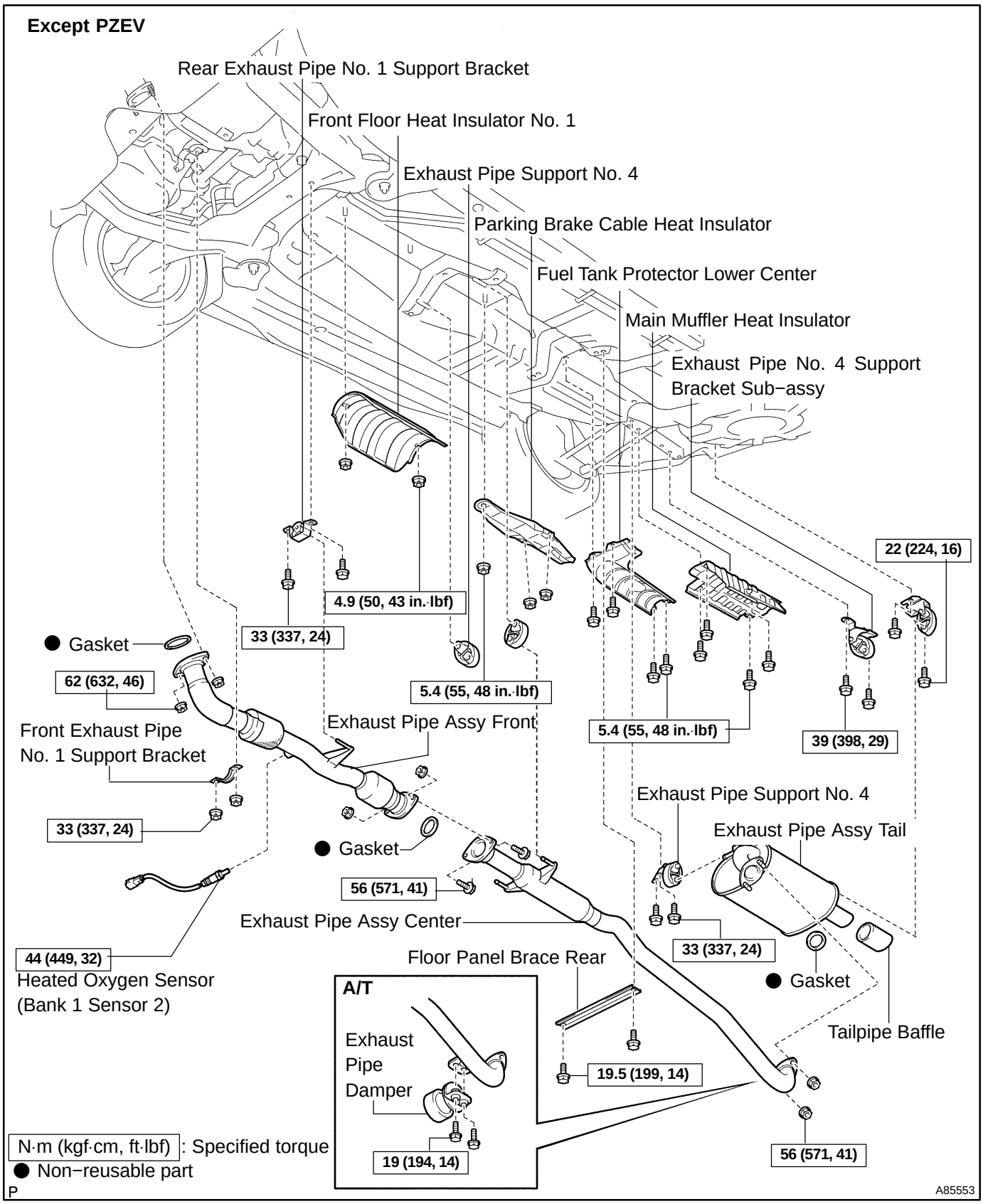
Except PZEV
Rear Exhaust Pipe No. 1 Support Bracket
Front Floor Heat Insulator No. 1
Exhaust Pipe Support No. 4
Parking Brake Cable Heat Insulator
Fuel Tank Protector Lower Center
Main Muffler Heat Insulator
Exhaust Pipe No. 4 Support Bracket Sub−assy
4.9 (50, 43 in.·lbf)
33 (337, 24)
5.4 (55, 48 in.·lbf)
22 (224, 16)
● Gasket
62 (632, 46)
Front Exhaust Pipe No. 1 Support Bracket
Exhaust Pipe Assy Front
5.4 (55, 48 in.·lbf)
39 (398, 29)
Exhaust Pipe Support No. 4
Exhaust Pipe Assy Tail
33 (337, 24)
● Gasket
56 (571, 41)
Exhaust Pipe Assy Center
33 (337, 24)
44 (449, 32)
Heated Oxygen Sensor (Bank 1 Sensor 2)
Floor Panel Brace Rear
● Gasket
Tailpipe Baffle
A/T
Exhaust Pipe Damper
19.5 (199, 14)
19 (194, 14)
56 (571, 41)
N·m (kgf·cm, ft·lbf) : Specified torque
● Non−reusable part
P
A85553

150B0−02

REPLACEMENT

1. REMOVE FLOOR PANEL BRACE REAR

(a) Remove the 2 bolts and panel brace.

2. REMOVE EXHAUST PIPE DAMPER (A/T)

(a) Remove the 2 bolts and damper.

3. REMOVE EXHAUST PIPE ASSY CENTER

(a) Remove the 2 bolts, 2 nuts and pipe center from the pipe front.

(b) Remove the 2 nuts and pipe center from the pipe tail.

(c) Remove the pipe center from the 2 pipe supports.

4. Bank 1 sensor 2:
REMOVE HEATED OXYGEN SENSOR

(a) Disconnect the sensor connector.

(b) Remove the sensor.

5. Bank 1 sensor 3:
REMOVE HEATED OXYGEN SENSOR

(a) Disconnect the sensor from the front pipe.

6. REMOVE FRONT EXHAUST PIPE NO. 1 SUPPORT BRACKET

(a) Remove the 2 nuts and front support bracket.

7. REMOVE REAR EXHAUST PIPE NO. 1 SUPPORT BRACKET

(a) Remove the 2 bolts and rear support bracket.

8. REMOVE EXHAUST PIPE ASSY FRONT

(a) Remove the 2 nuts and pipe front.

9. REMOVE EXHAUST PIPE ASSY TAIL

(a) Remove the pipe tail from the 3 pipe supports.

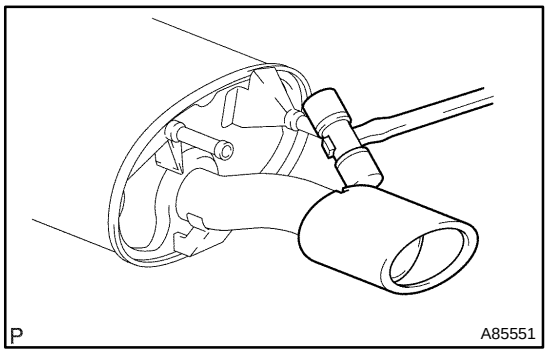

10. REMOVE TAIL PIPE BAFFLE

(a) Using a plastic hammer, tap the baffle uniformly to remove it.

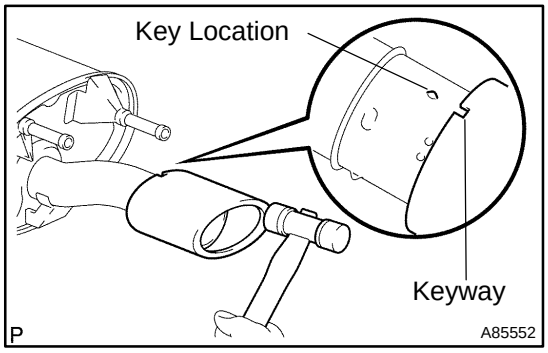

11. INSTALL TAIL PIPE BAFFLE

(a) Align the keyway of the baffle with the key location on the pipe.

(b) Using a plastic hammer, tap the baffle to install it.

12. INSTALL EXHAUST PIPE ASSY TAIL

(a) Install the pipe to the 3 pipe supports.

13. INSTALL EXHAUST PIPE ASSY FRONT

(a) Install a new gasket and the pipe front to the manifold converter with the 2 nuts.
Torque: 62 N·m (632 kgf·cm, 46 ft·lbf)

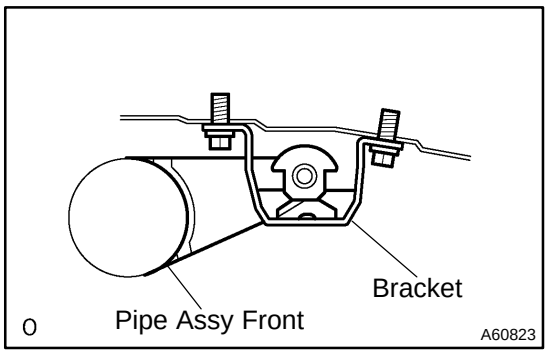

14. INSTALL REAR EXHAUST PIPE NO. 1 SUPPORT BRACKET

(a) Install the rear support bracket with the 2 bolts.
Torque: 33 N·m (337 kgf·cm, 24 ft·lbf)

NOTICE:
Do not install the bracket facing the wrong direction.

15. INSTALL FRONT EXHAUST PIPE NO. 1 SUPPORT BRACKET

(a) Install the front support bracket with the 2 nuts.
Torque: 33 N·m (337 kgf·cm, 24 ft·lbf)

16. Bank 1 sensor 2:
INSTALL HEATED OXYGEN SENSOR

(a) Install the sensor.
Torque: 44 N·m (449 kgf·cm, 32 ft·lbf)

(b) Connect the sensor connector.

17. Bank 1 sensor 3:
INSTALL HEATED OXYGEN SENSOR

(a) Install the sensor.
Torque: 44 N·m (449 kgf·cm, 32 ft·lbf)

HINT:

- Before installing the sensor, twist the sensor wire counterclockwise 3 and 1/2 turns.
- After installing the sensor, check that the sensor wire is not twisted. If it is twisted, remove the sensor and reinstall it.

18. INSTALL EXHAUST PIPE ASSY CENTER

(a) Install a new gasket and the pipe center to the pipe front with the 2 bolts and 2 nuts.
Torque: 56 N·m (571 kgf·cm, 41 ft·lbf)

(b) Install a new gasket and the pipe center to the pipe tail with the 2 nuts.
Torque: 56 N·m (571 kgf·cm, 41 ft·lbf)

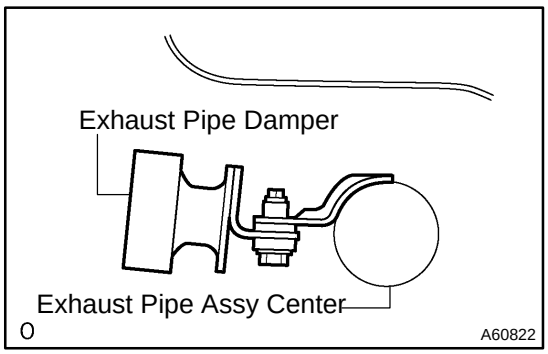

19. INSTALL EXHAUST PIPE DAMPER (A/T)

(a) Install the damper with the 2 bolts.
Torque: 19 N·m (194 kgf·cm, 14 ft·lbf)

NOTICE:
Do not install the damper facing the wrong direction.

20. INSTALL FLOOR PANEL BRACE REAR

(a) Install the brace with the 2 bolts.
Torque: 19.5 N·m (199 kgf·cm, 14 ft·lbf)

21. CHECK FOR EXHAUST GAS LEAKS

If the exhaust pipe is loose, tighten it.
If damaged, replace it.

EXHAUST PIPE ASSY (1MZ−FE/3MZ−FE)

150B1−02

COMPONENTS

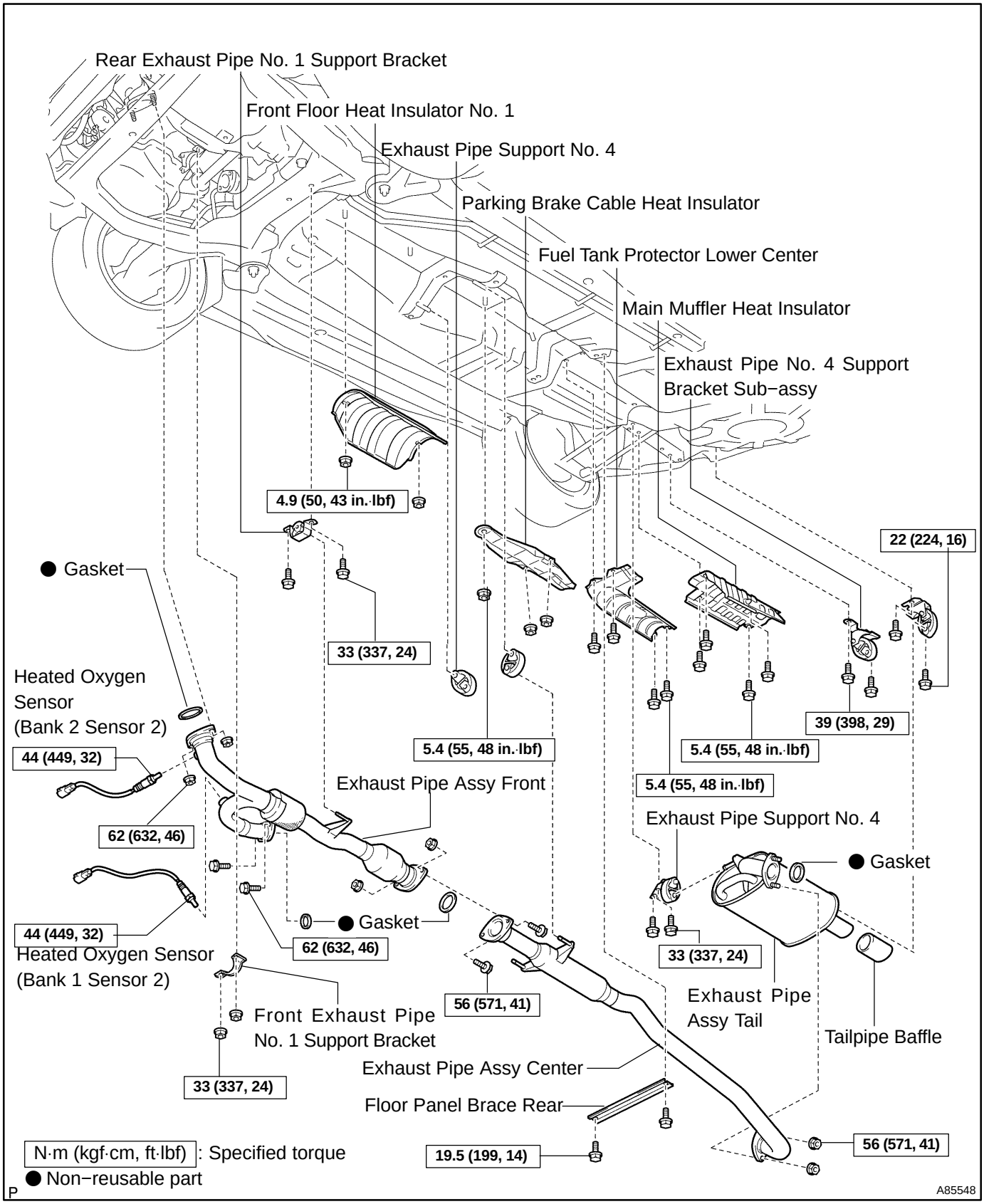

150B2−02

REPLACEMENT

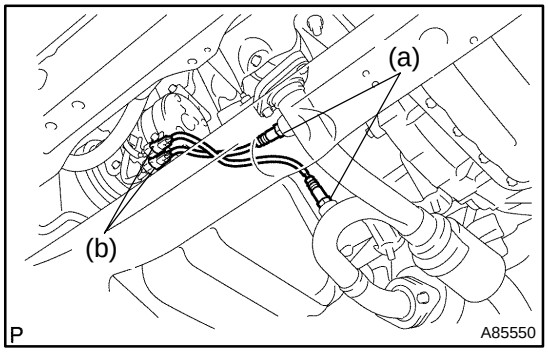

1. Bank 1 sensor 2 and bank 2 sensor 2: REMOVE HEATED OXYGEN SENSOR

(a) Disconnect the 2 sensor connectors.
(b) Remove the 2 sensors.

2. REMOVE FRONT EXHAUST PIPE NO. 1 SUPPORT BRACKET

(a) Remove the 2 nuts and front support bracket.

3. REMOVE FLOOR PANEL BRACE REAR

(a) Remove the 2 bolts and brace.

4. REMOVE REAR EXHAUST PIPE NO. 1 SUPPORT BRACKET

(a) Remove the 2 bolts and rear support bracket.

5. REMOVE EXHAUST PIPE ASSY FRONT

(a) Remove the 2 nuts holding the manifold converter No. 2 to the pipe front.
(b) Remove the 2 bolts holding the manifold converter RH to the pipe front.
(c) Remove the 2 bolts and 2 nuts holding the center to the pipe front. Then remove the pipe front.

6. REMOVE EXHAUST PIPE ASSY CENTER

(a) Remove the 2 nuts from the pipe tail.
(b) Remove the pipe center from the 2 pipe supports.
(c) Remove the gasket between the pipe center and pipe tail.

7. REMOVE EXHAUST PIPE ASSY TAIL

(a) Remove the pipe tail from the 3 pipe supports.

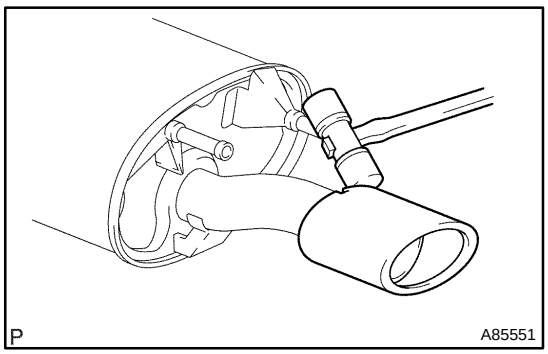

8. REMOVE TAIL PIPE BAFFLE

(a) Using a plastic hammer, tap the baffle uniformly to remove it.

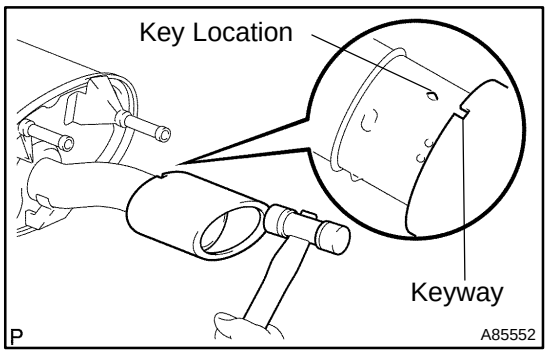

9. INSTALL TAIL PIPE BAFFLE

(a) Align the keyway of the baffle with the key location on the pipe assy tail.

(b) Using a plastic hammer, tap the baffle to install it.

10. INSTALL EXHAUST PIPE ASSY TAIL

(a) Install the pipe tail to the 3 pipe supports.

11. INSTALL EXHAUST PIPE ASSY CENTER

(a) Install a new gasket between the pipe center and pipe tail.

(b) Install the pipe center to the 2 exhaust pipe supports.

(c) Install the pipe center with the 2 nuts.

Torque: 56 N·m (571 kgf·cm, 41 ft·lbf)

12. INSTALL EXHAUST PIPE ASSY FRONT

(a) Install 3 new gaskets to the pipe front.

(b) Install the pipe front to the manifold converter RH with the 2 bolts.

Torque: 62 N·m (632 kgf·cm, 46 ft·lbf)

(c) Install the pipe front to the manifold converter No. 2 with the 2 nuts.

Torque: 62 N·m (632 kgf·cm, 46 ft·lbf)

(d) Install the pipe front to the pipe center with the 2 bolts and 2 nuts.

Torque: 56 N·m (571 kgf·cm, 41 ft·lbf)

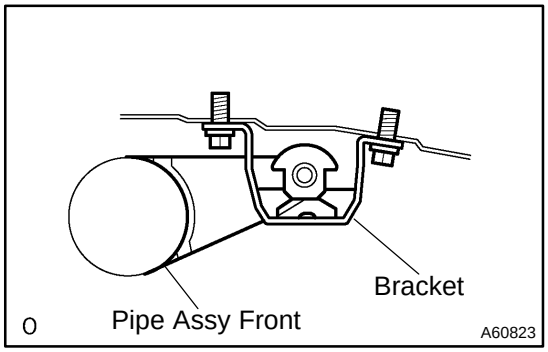

13. INSTALL REAR EXHAUST PIPE NO. 1 SUPPORT BRACKET

(a) Install the rear support bracket with the 2 bolts.

Torque: 33 N·m (337 kgf·cm, 24 ft·lbf)

NOTICE:

Do not install the bracket facing the wrong direction.

14. INSTALL FLOOR PANEL BRACE REAR

(a) Install the floor panel brace with the 2 bolts.

Torque: 19.5 N·m (199 kgf·cm, 14 ft·lbf)

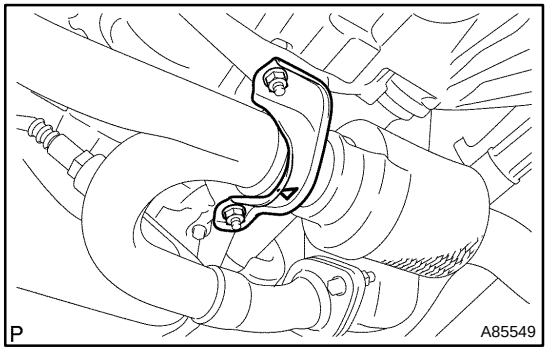

15. INSTALL FRONT EXHAUST PIPE NO. 1 SUPPORT BRACKET

(a) Install the front support bracket with the 2 nuts.

Torque: 33 N·m (337 kgf·cm, 24 ft·lbf)

NOTICE:

Do not install the support bracket facing the wrong direction.

16. Bank 1 sensor 2 and bank 2 sensor 2: INSTALL HEATED OXYGEN SENSOR

(a) Install the 2 sensors.
Torque: 44 N·m (449 kgf·cm, 32 ft·lbf)

(b) Connect the 2 sensor connectors.

17. CHECK FOR EXHAUST GAS LEAKS

If the exhaust pipe is loose, tighten it.

If damaged, replace it.

COOLING SYSTEM (2AZ−FE)(From July, 2003)

1602Y−06

ON−VEHICLE INSPECTION

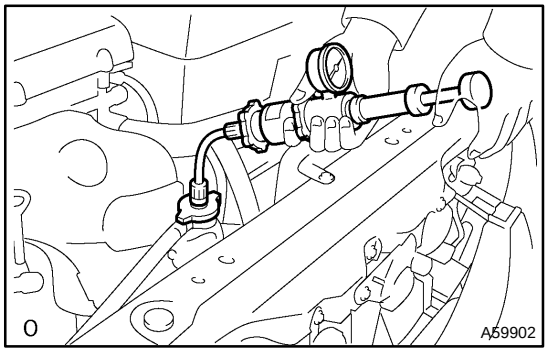

1. INSPECT COOLING SYSTEM FOR LEAKS

CAUTION:

Do not remove the radiator cap while the engine and radiator are still hot. Pressurized, hot engine coolant and steam may be released and cause serious burns.

(a) Fill the radiator with coolant and attach a radiator cap tester.

(b) Warm up the engine.

(c) Using the radiator cap tester, increase the pressure inside the radiator to 118 kPa (1.2 kgf/cm^2, 17.1 psi), and check that the pressure does not drop.

If the pressure drops, check the hoses, radiator or water pump for leaks. If no external leaks are found, check the heater core, cylinder block and head.

2. CHECK ENGINE COOLANT LEVEL AT RESERVOIR

(a) The engine coolant level should be between the ”LOW” and ”FULL” lines, when the engine is cold.

If low, check for leaks and add ”Toyota Super Long Life Coolant” or similar high quality ethylene glycol based non−silicate, non−amine, non−nitrite, and non−borate coolant with long−life hybrid organic acid technology up to the ”FULL” line.

3. CHECK ENGINE COOLANT QUALITY

(a) Remove the radiator cap.

CAUTION:

Do not remove the radiator cap while the engine and radiator are still hot. Pressurized, hot engine coolant and steam may be released and cause serious burns.

(b) Check if there is any excessive deposits of rust or scale around the radiator cap and radiator filler hole. Also, the coolant should be free from oil.

HINT:

If excessively dirty, replace the coolant.

(c) Reinstall the radiator cap.

1602Z−07

INSPECTION

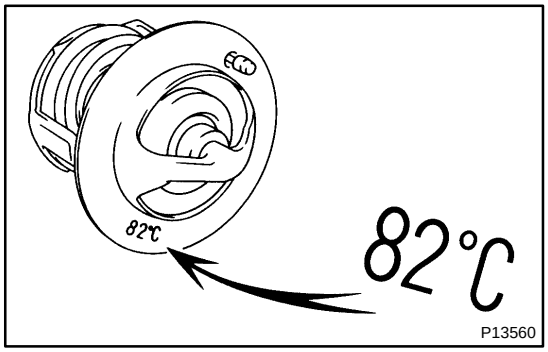

1. INSPECT THERMOSTAT

HINT:

The thermostat is numbered with the valve opening temperature.

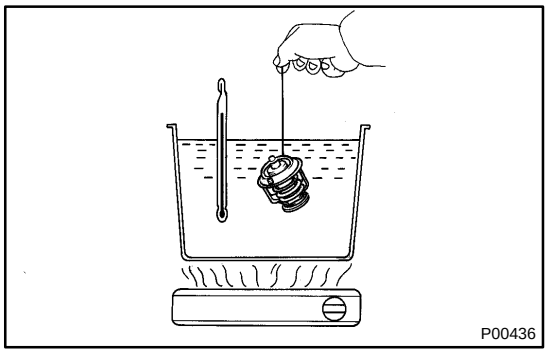

(a) Immerse the thermostat in water and gradually heat the water.

(b) Check the valve opening temperature.

Valve opening temperature: 80 to 84●C (176 to 183●F)

If the valve opening temperature is not as specified, replace the thermostat.

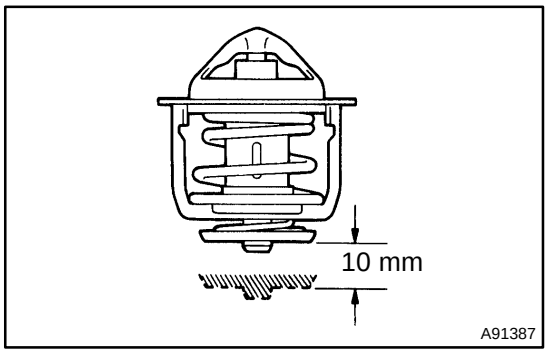

(c) Check the valve lift.

Valve lift: 10 mm (0.394 in.) or more at 95●C (203●F)

If the valve lift is not as specified, replace the thermostat.

(d) Check that the valve is fully closed when the thermostat is at low temperatures (below 77●C (171●F)).

If not closed, replace the thermostat.

2. INSPECT RADIATOR CAP SUB−ASSY

NOTICE:

- **If the reservoir cap has contaminations, always rinse it with water.**
- **Before using a radiator cap tester, wet the relief valve and pressure valve with engine coolant or water.**
- **When performing steps (a) and (b) below, keep the tester at an angle of over 30●above the horizontal.**

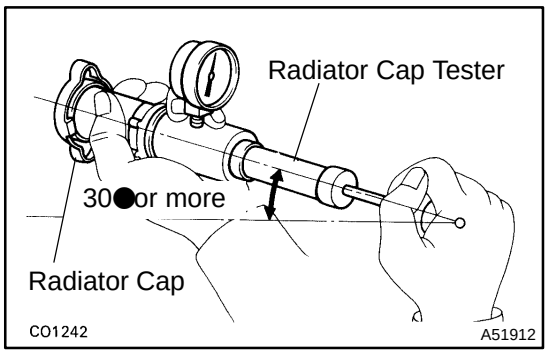

(a) Using a radiator cap tester, slowly pump the tester and check that air is being released from the vacuum valve.

Pump speed: 1 push every 3 seconds or more

NOTICE:

Push the pump at a constant speed.

If air is not being released from the vacuum valve, replace the reservoir cap.

(b) Pump the tester and measure the relief valve opening pressure.

Pump speed: 1 push within 1 second

NOTICE:

The pump speed above should be followed for the first pump only. It will close the vacuum valve. Once the vacuum valve is closed, the pump speed can be reduced.

Standard opening pressure:

78 to 122 kPa (0.80 to 1.25 kgf/cm^2, 11.3 to 17.8 psi)

HINT:

Use the tester's maximum reading as the opening pressure. If the maximum reading is less than the minimum opening pressure above, replace the radiator cap.

COOLING FAN SYSTEM (2AZ−FE)(From July, 2003)

16030−06

ON−VEHICLE INSPECTION

HINT:

sThe cooling fan may rotate when the ignition switch is turned from ACC to ON. This is nornal.

1. CHECK COOLING FAN OPERATION WITH LOW TEMPERATURE (Below 83●C (181●F))

(a) Turn the ignition switch ON.

(b) Check that the cooling fan stops.

If not, check the cooling fan relay and ECT sensor, and check for disconnected connector or wire breaks between the cooling fan relay and ECT sensor.

(c) Disconnect the ECT sensor connector.

(d) Check that the cooling fan rotates.

If not, check the fuses, cooling fan relay, ECM and cooling fan, and check for a short circuit between the cooling fan relay and ECT Sensor..

(e) Reconnect ECT sensor connector.

2. CHECK COOLING FAN OPERATION WITH HIGH TEMPERATURE (Above 98●C (208●F))

(a) Start the engine, and raise ECT to above 98●C (208●F).

(b) Check that the cooling fan rotates.

If not, replace the ECT sensor.

3. INSPECT COOLING FAN

(a) Disconnect the cooling fan connector.

(b) Connect battery and ammeter to the cooling fan connector.

(c) Check that the cooling fan rotates smoothly, and check the reading on the ammeter.

Standard amperage: 4.9 to 8.5 A at 20●C (68●F)

If not, replace the cooling fan.

(d) Reconnect the cooling fan connector.

160Q7−02

INSPECTION

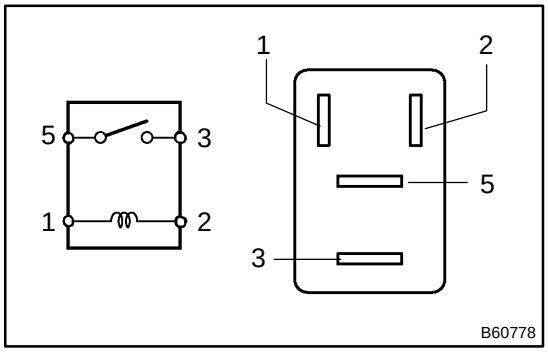

1. INSPECT RELAY (FAN NO. 1, FAN NO. 3)

(a) Check the resistance of the relay.

Standard:

Tester Connection	Specified Condition
3 − 5	10 kΩ or higher
3 − 5	Below 1 Ω (when battery voltage is applied to terminals 1 and 2)

If the result is not as specified, replace the relay.

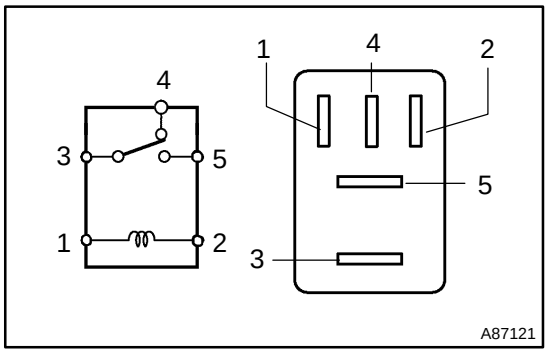

2. INSPECT RELAY (FAN NO. 2)

(a) Check the resistance of the relay.

Standard:

Tester Connection	Specified Condition
3 − 4	Below 1 Ω
3 − 5	10 kΩ or higher
3 − 5	Below 1 Ω (when battery voltage is applied to terminals 1 and 2)

If the result is not as specified, replace the relay.

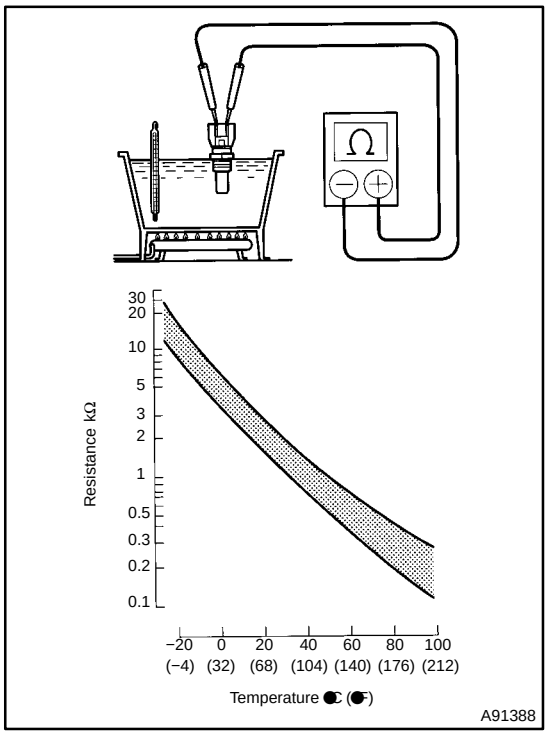

3. INSPECT ENGINE COOLANT TEMPERATURE SENSOR

(a) Check the resistance between terminals 1 and 2.

Standard:

Condition	Specified Condition
Approx. 20●C (68●F)	2.29 to 2.6 kΩ
Approx. 80●C (176●F)	0.300 to 0.327 kΩ

If the result is not as specified, replace the sensor.

NOTICE:

When checking the ECT sensor in the water, the terminals should be kept dry. After the check, dry the sensor.

COOLANT (2AZ−FE)(From July, 2003)

16032−07

REPLACEMENT

1. DRAIN ENGINE COOLANT

(a) Remove the radiator cap.

CAUTION:

Do not remove the radiator cap while the engine and radiator are still hot. Pressurized, hot engine coolant and steam may be released and cause serious burns.

(b) Drain engine coolant by loosening the radiator drain plug and the engine's water drain plug.

HINT:

Engine coolant inside the radiator is drained from the drain hole located on the bottom of the engine under cover.

(c) Tighten the cylinder block drain cock plugs.

Torque: 13 N·m (130 kgf·cm, 10 ft·lbf)

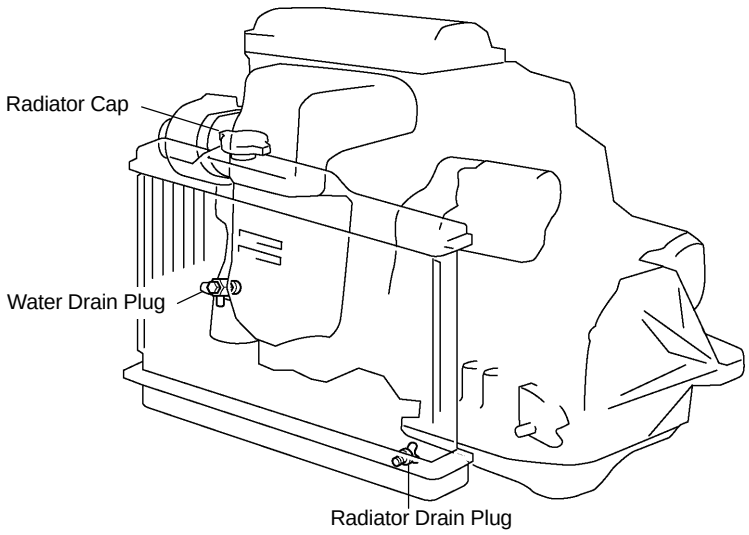

0 A52575

2. ADD ENGINE COOLANT

(a) Tighten the radiator drain plug.

(b) Add engine coolant into the radiator until it overflows.

Capacity: 6.2 liters (6.6 US qts, 5.4 lmp. qts)

HINT:

- Use of improper coolants may damage the engine cooling system.
- Use "Toyota Super Long Life Coolant" or similar high quality ethylene glycol based non−silicate, non−amine, non−nitrite, and non−borate coolant with long−life hybrid organic acid technology.
- New Toyota vehicles are filled with Toyota Super Long Life Coolant (color is pink, premixed ethylene−glycol concentration is approximately 50% and freezing temperature is −35 C (−31 F)). When replacing the coolant, Toyota Super Long Life Coolant is recommended.
- Observe the coolant level inside the radiator by pressing the inlet and outlet radiator hoses several times by hand. If the coolant level goes down, add the coolant.

NOTICE:

Do not use plain water alone.

(c) Pour coolant into the radiator reservoir tank until the coolant reaches the full line.

(d) Install the radiator cap.
(e) Start the engine and run the engine for 10 seconds.
(f) Remove the radiator cap after 10 seconds. Pour coolant if the coolant level is lower.
(g) Repeat (d) to (f) until the coolant level remains the same from steps (d) to (f).

HINT:

Perform the procedures above before the engine warms up. A warmed up engine causes the thermostat valve to open, and the air inside of the engine circulates between the radiator and the engine.

(h) Install the radiator cap.
(i) Warm up the engine until the thermostat valve begins to open.

HINT:

As the engine warms up, press the radiator inlet and outlet hose several times by hand.

(j) Stop the engine and wait until the coolant cools down to room temperature. If the coolant is below the full line, add coolant.
(k) Install the radiator cap and check the radiator reservoir tank coolant level. If it is below the full line, add coolant.

3. CHECK FOR ENGINE COOLANT LEAKS

(a) Fill the radiator with coolant and attach a radiator cap tester.
(b) Pump it to 118 kPa (1.2 kgf/cm^2, 17.1 psi) and check leakage.

WATER PUMP ASSY (2AZ−FE)(From July, 2003)

1602V−09

REPLACEMENT

1. DRAIN ENGINE COOLANT (See page 16−6)
2. REMOVE FRONT WHEEL RH
3. REMOVE FRONT FENDER APRON SEAL RH
4. REMOVE ENGINE MOVING CONTROL ROD W/BRACKET (See page 14−29)
5. REMOVE ENGINE MOUNTING STAY NO.2 RH (See page 14−29)
6. REMOVE ENGINE MOUNTING BRACKET NO.2 RH (See page 14−29)
7. REMOVE FAN AND GENERATOR V BELT (See page 14−5)
8. REMOVE GENERATOR ASSY (See page 19−17)

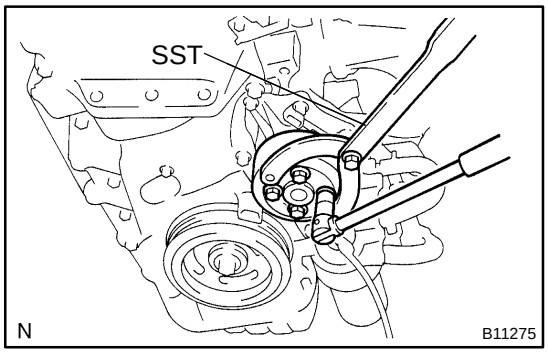

9. REMOVE WATER PUMP PULLEY

(a) Using SST, remove the 4 bolts and pump pulley.
SST 09960−10010 (09962−01000, 09963−00700)

(b) Disconnect the crankshaft position sensor wire harness clamp.

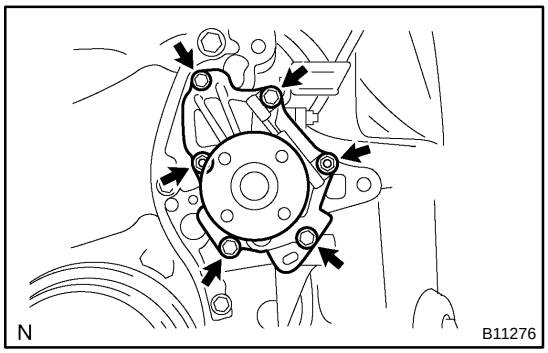

10. REMOVE WATER PUMP ASSY

(a) Remove the 4 bolts, 2 nuts, bracket and water pump.

11. INSTALL WATER PUMP ASSY

(a) Remove any old packing (FIPG) material and be careful not to drop any oil on the contacting surfaces of the water pump and cylinder block.

HINT:

- Using a razor blade and gasket scraper, remove all the old packing (FIPG) materials from the gasket surfaces and sealing grooves.
- Thoroughly clean all components to remove all loose material.
- Using a non−residue solvent, clean both sealing surfaces.

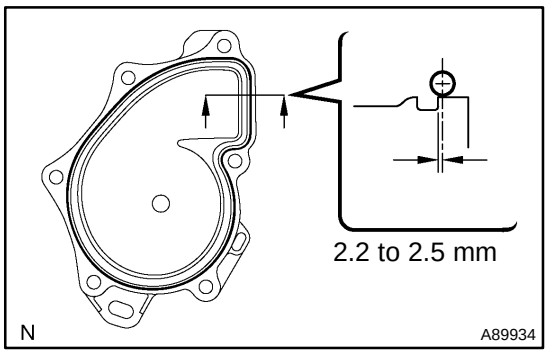

(b) Apply seal packing to the water pump as shown in the illustration.

Seal packing: Part No. 08826−00080 or equivalent

HINT:

- Install a nozzle that has been cut to a 2.2 to 2.5 mm (0.09 to 0.10 in.) opening.
- Parts must be assembled within 5 minutes of application. Otherwise the material must be removed and reapplied.
- Immediately remove the nozzle from the tube and reinstall cap.

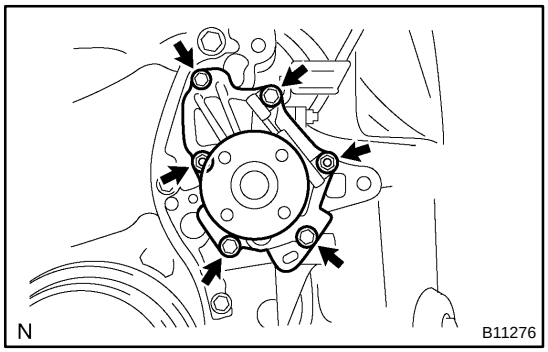

(c) Install the water pump and bracket with the 4 bolts and 2 nuts.

Torque: 9.0 N·m (92 kgf·cm, 80 in.·lbf)

(d) Connect the crankshaft position sensor wire harness clamp.

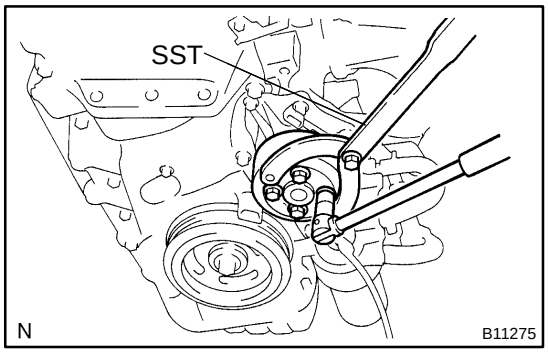

12. INSTALL WATER PUMP PULLEY

(a) Using SST, install the pump pulley with the 4 bolts.

SST 09960−10010 (09962−01000, 09963−00700)

Torque: 26 N·m (265 kgf·cm, 19 ft·lbf)

13. INSTALL GENERATOR ASSY (See page 19−17)
14. INSTALL FAN AND GENERATOR V BELT (See page 14−5)
15. INSTALL ENGINE MOUNTING BRACKET NO.2 RH (See page 14−29)
16. INSTALL ENGINE MOVING CONTROL ROD W/BRACKET (See page 14−29)
17. INSTALL ENGINE MOUNTING STAY NO.2 RH (See page 14−29)
18. INSTALL FRONT FENDER APRON SEAL RH
19. INSTALL FRONT WHEEL RH
20. ADD ENGINE COOLANT (See page 16−6)
21. CHECK FOR ENGINE COOLANT LEAKS (See page 16−1)

160PT−02

INSPECTION

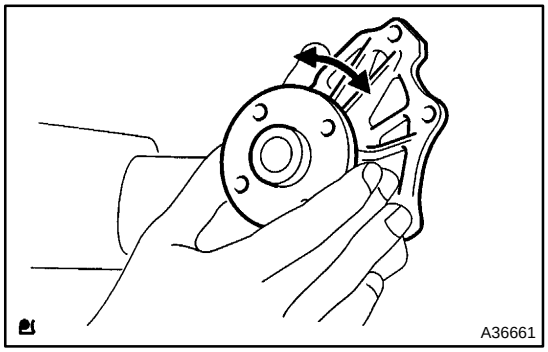

1. INSPECT WATER PUMP ASSY

(a) Visually check for drain hole coolant leakage.

(b) Turn the pulley, and check that the water pump bearing moves smoothly and noiselessly.

If the bearing moves roughly or noisily, replace the water pump.

THERMOSTAT (2AZ−FE)(From July, 2003)

1602X−08

REPLACEMENT

1. **DRAIN ENGINE COOLANT (See page 16−6)**
2. **REMOVE FAN AND GENERATOR V BELT (See page 16−6)**
3. **REMOVE GENERATOR ASSY (See page 19−17)**
4. **DISCONNECT RADIATOR HOSE INLET**

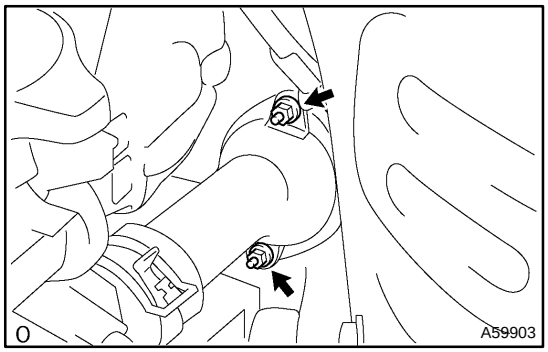

5. **REMOVE WATER INLET**

(a) Remove the 2 nuts and disconnect the water inlet from the cylinder block.

6. **REMOVE THERMOSTAT**

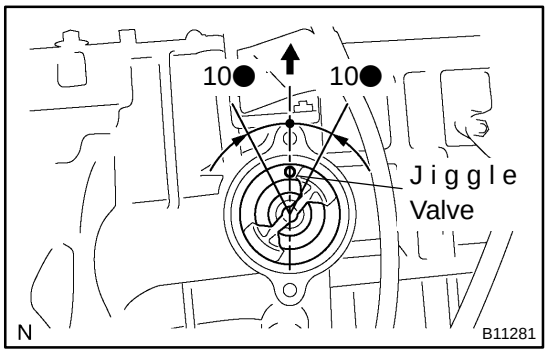

7. **INSTALL THERMOSTAT**

(a) Install a new gasket to the thermostat.

(b) Install the thermostat with the jiggle valve facing up.

HINT:

The jiggle valve may be set within 10● on either side of the prescribed position.

8. **INSTALL WATER INLET**

(a) Install the water inlet with the 2 nuts.

Torque: 9.0 N·m (92 kgf·cm, 80 in.·lbf)

9. **INSTALL RADIATOR HOSE INLET**
10. **INSTALL GENERATOR ASSY (See page 19−17)**
11. **INSTALL FAN AND GENERATOR V BELT (See page 14−5)**
12. **ADD ENGINE COOLANT (See page 16−6)**
13. **CHECK FOR ENGINE COOLANT LEAKS (See page 16−1)**

RADIATOR ASSY (2AZ−FE)(From July, 2003)

160PU−02

ON−VEHICLE CLEANING

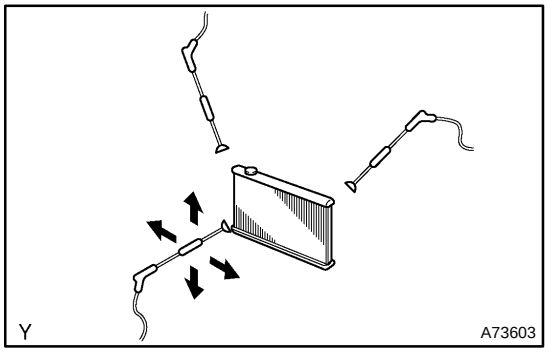

1. INSPECT FINS BLOCKAGE

If the fins are clogged, wash them with water or a steam cleaner. Dry with compressed air.

NOTICE:

- **If the distance between the steam cleaner and the core is too close, the fins may become damaged. Keep the following injection distance.**

  Standard:

Injection Distance	Injection Pressures
300 mm (11.81 in.)	2,942 to 4,903 kPa (30 to 50 kg/cm^2, 427 to 711 psi)
500 mm (19.69 in.)	4,903 to 7,845 kPa (50 to 80 kg/cm^2, 711 to 1,138 psi)

- **If the fins are bent, straighten them with a screwdriver or pliers.**
- **Never apply water directly onto the electronic components.**

160PV−02

COMPONENTS

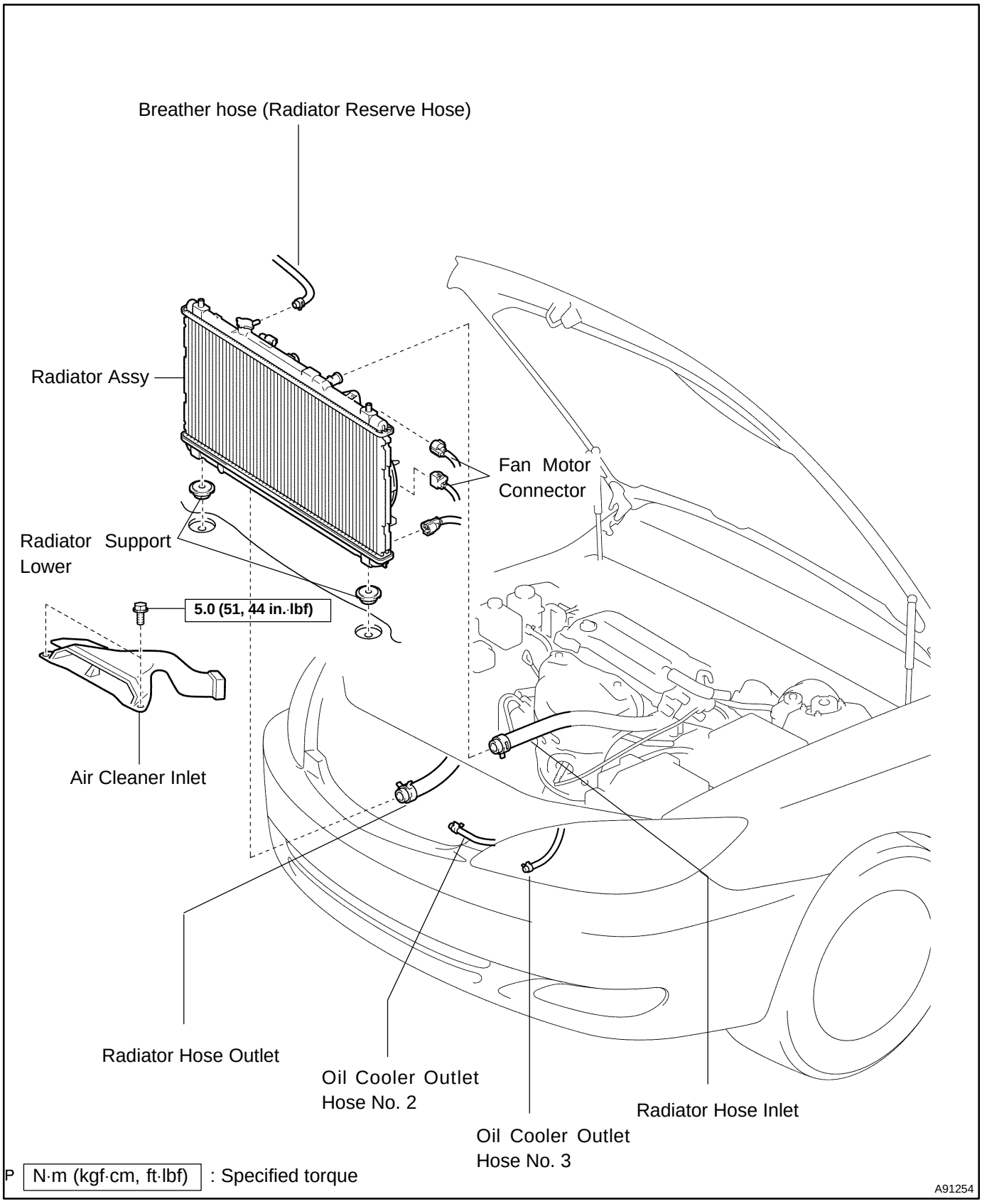

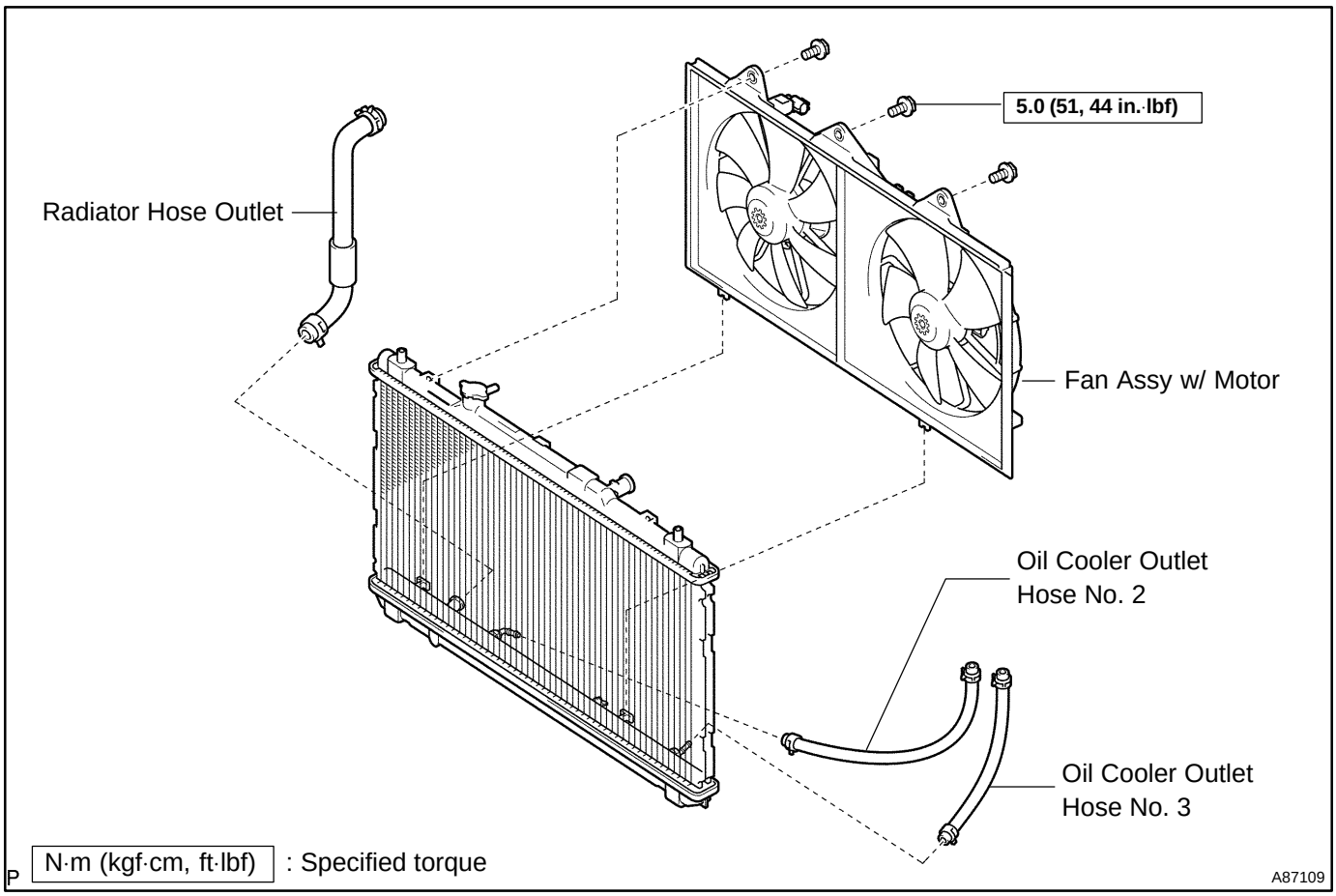
5.0 (51, 44 in.·lbf)
Radiator Hose Outlet
Fan Assy w/ Motor
Oil Cooler Outlet
Hose No. 2
Oil Cooler Outlet
Hose No. 3
N·m (kgf·cm, ft·lbf) : Specified torque
A87109

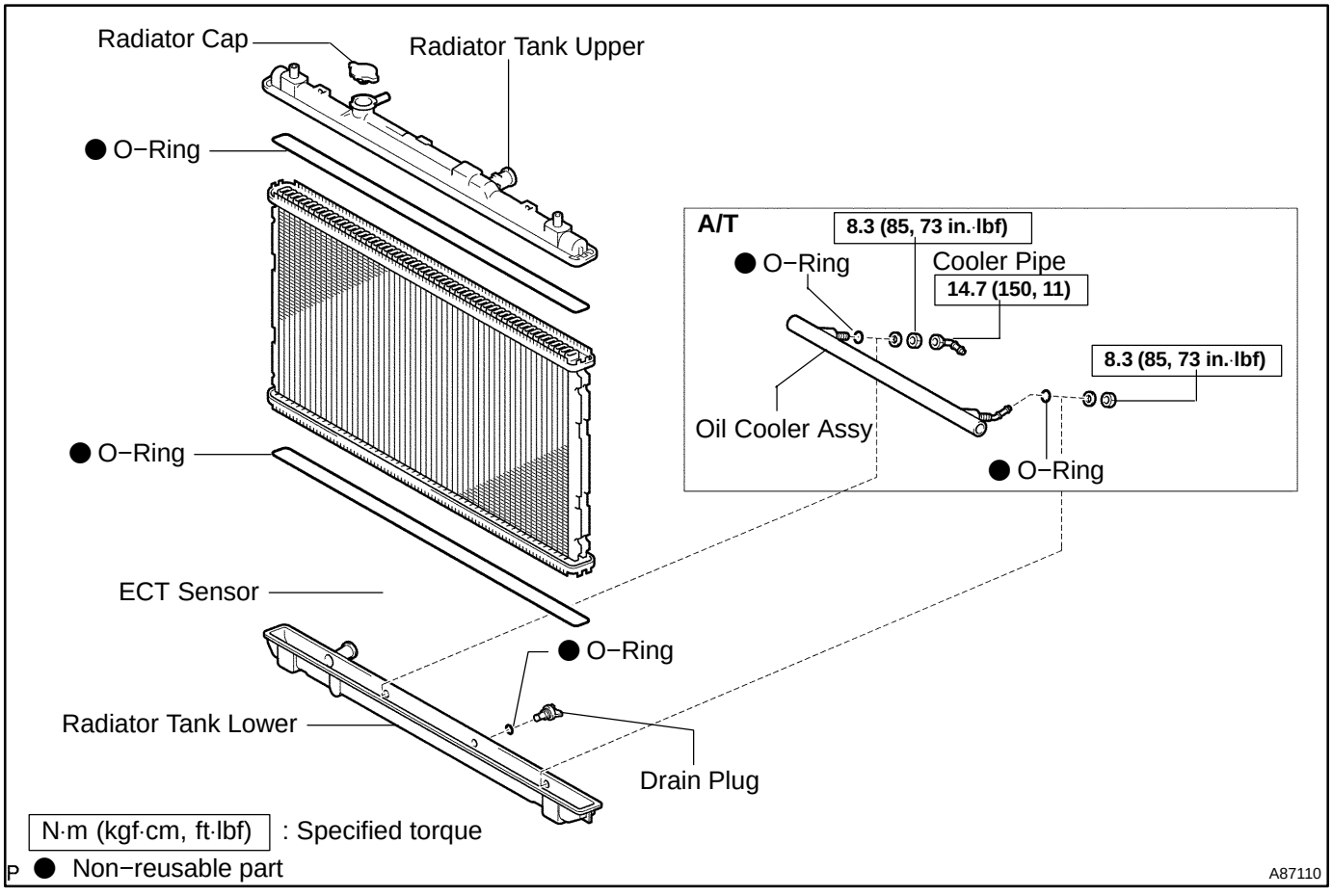
Radiator Cap
Radiator Tank Upper
● O−Ring
● O−Ring
ECT Sensor
● O−Ring
Radiator Tank Lower
Drain Plug
A/T
8.3 (85, 73 in.·lbf)
● O−Ring
Cooler Pipe
14.7 (150, 11)
8.3 (85, 73 in.·lbf)
Oil Cooler Assy
● O−Ring
N·m (kgf·cm, ft·lbf) : Specified torque
● Non−reusable part
A87110

REPLACEMENT

1. **DRAIN ENGINE COOLANT (See page 16−6)**
2. **DISCONNECT BREATHER HOSE**
3. **DISCONNECT RADIATOR HOSE INLET**
4. **DISCONNECT RADIATOR HOSE OUTLET**
5. **DISCONNECT OIL COOLER OUTLET HOSE NO.2 (A/T)**
6. **DISCONNECT OIL COOLER OUTLET HOSE NO.3 (A/T)**

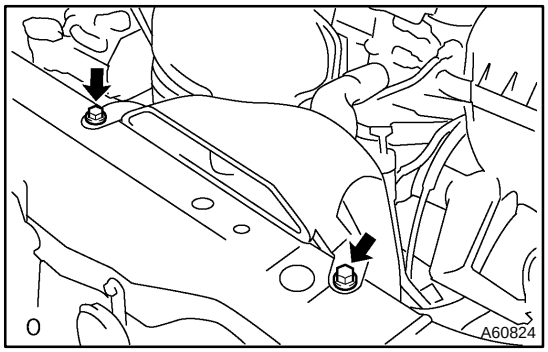

7. REMOVE AIR CLEANER INLET ASSY

(a) Remove the 2 bolts and air cleaner inlet.

8. REMOVE RADIATOR SUPPORT UPPER

(a) Disconnect the 2 horn connectors.

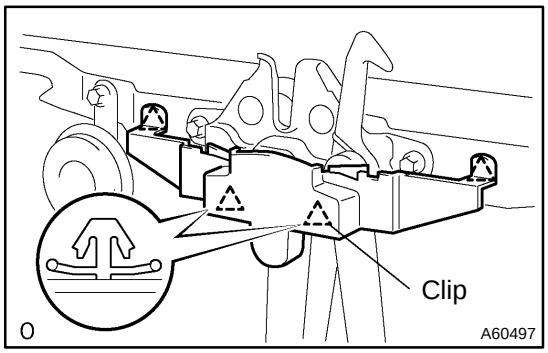

(b) Remove the hood lock release lever cover.

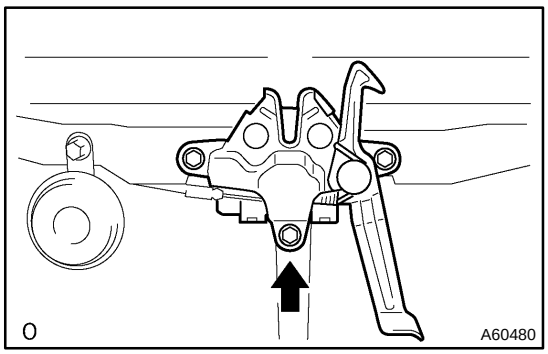

(c) Remove the bolt shown in the illustration.

(d) Remove the 4 bolts and radiator support upper.

9. REMOVE RADIATOR ASSY

(a) Disconnect the fan motor connector.

(b) Disconnect the ECT sensor connector.

(c) Remove the radiator from the body.

10. REMOVE RADIATOR SUPPORT LOWER

11. REMOVE FAN ASSY W/MOTOR

(a) Remove the 3 bolts and fan w/ motor from the radiator.

12. INSTALL FAN ASSY W/MOTOR

(a) Install the fan w/ motor to the radiator with the 3 bolts.
Torque: 5.0 N·m (51 kgf·cm, 44 in.·lbf)

13. INSTALL RADIATOR ASSY

(a) Install the radiator to the body.

(b) Connect the ECT sensor connector.

(c) Connect the fan motor connector.

14. INSTALL RADIATOR SUPPORT UPPER

(a) Install the radiator support upper with the 4 bolts.
Torque: 14 N·m (142 kgf·cm,10 ft·lbf)

(b) Connect the 2 horn connectors.

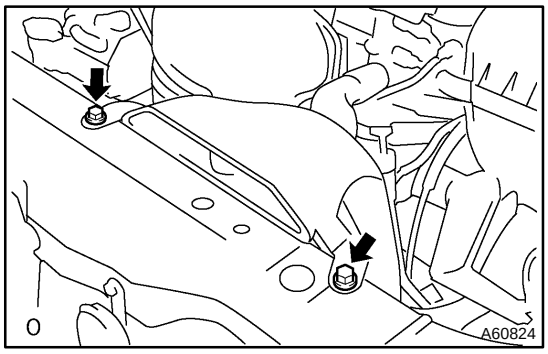

15. INSTALL AIR CLEANER INLET ASSY

(a) Install the air cleaner inlet with the 2 bolts.
Torque: 5.0 N·m (51 kgf·cm, 44 in.·lbf)

16. ADJUST HOOD SUB−ASSY (See page 75−1)

17. ADD ENGINE COOLANT (See page 16−6)

18. CHECK FOR ENGINE COOLANT LEAKS (See page 16−1)

160PX−04

OVERHAUL

1. REMOVE DRAIN PLUG

(a) Remove the drain plug.

(b) Remove the O−ring.

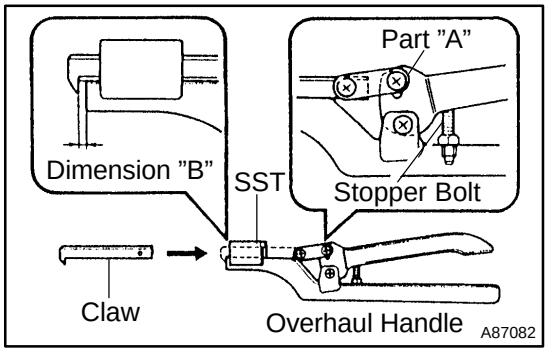

2. ASSEMBLE SST

SST 09230−01010 (09231−01010, 09231−01030)

(a) Install the claw to the overhaul handle, inserting it in the hole in part ”A” as shown in the illustration.

(b) While gripping the handle, adjust the stopper bolt so that dimension ”B” is as shown in the illustration.

Dimension: 0.2 to 0.3 mm (0.008 to 0.012 in.)

NOTICE:

If the stopper bolt is not adjusted, the claw may be damaged.

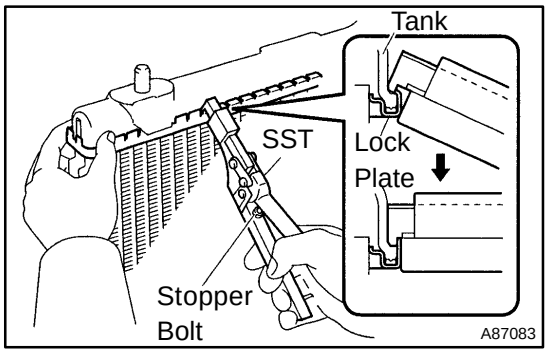

3. REMOVE UNCAULK LOCK PLATE

Using SST to release the caulking, grip the handle until stopped by the stopper bolt.

SST 09230−01010 (09231−01010, 09231−01030)

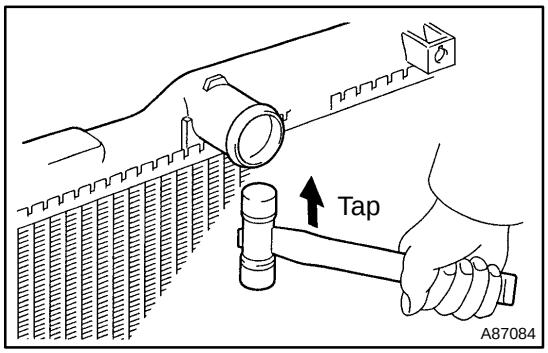

4. REMOVE RADIATOR TANK UPPER AND TANK LOWER

(a) Lightly tap the bracket of the radiator (or radiator hose inlet or outlet) with a soft−faced hammer, and remove the tank.

(b) Remove the O−ring.

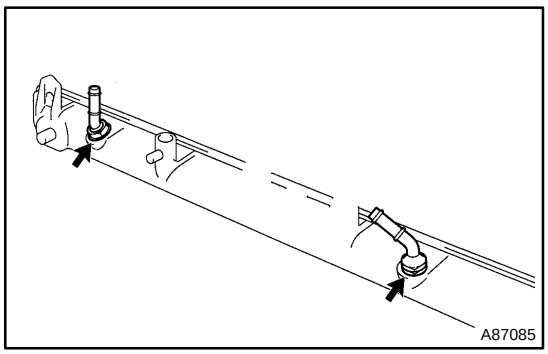

5. A/T:

REMOVE OIL COOLER ASSY

(a) Remove the cooler pipe

(b) Loosen the 2 nuts and 2 plate washers.

(c) Remove the oil cooler

(d) Remove the 2 O−rings from the oil cooler.

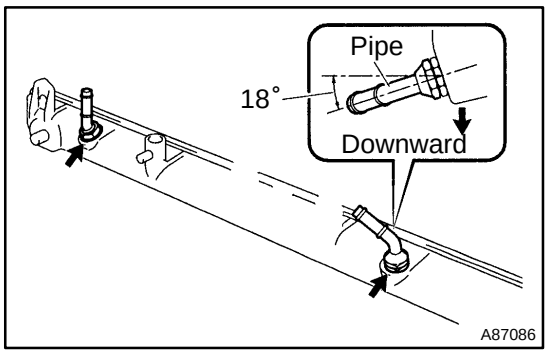

6. A/T:
INSTALL OIL COOLER ASSY

(a) Clean the O−ring contact surface of the lower tank and oil cooler.
(b) Install 2 new O−rings to the oil cooler.
(c) Install the oil cooler to the lower tank with the 2 plate washers and nuts.
Torque: 8.3 N·m (85 kgf·cm, 73 in.·lbf)
(d) Install the cooler pipe in the direction indicated in the illustration.
Torque: 14.7 N·m (150 kgf·cm, 11 ft·lbf)

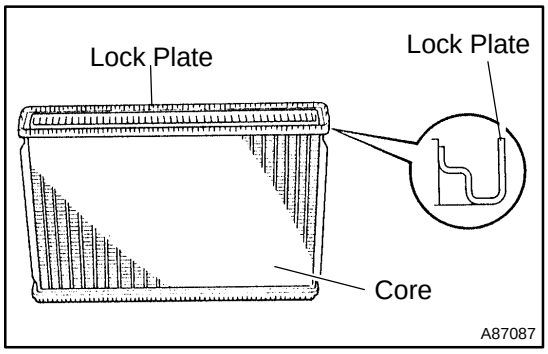

7. INSPECT LOCK PLATE FOR DAMAGE

HINT:

- If the sides of the lock plate groove are deformed, reassembly of the tank will be impossible.
  Therefore, first correct any deformation with pliers or similar object.
- Water leakage will result if the bottom of the lock plate groove is damaged or dented. Repair or replace if necessary.

NOTICE:
The radiator can only be recaulked 2 times. After the 2nd time, the radiator core must be replaced.

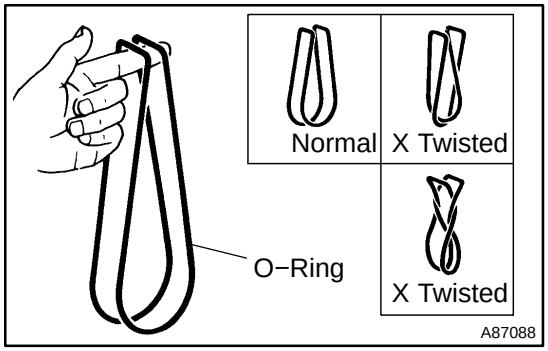

8. INSTALL RADIATOR TANK UPPER AND TANK LOWER

(a) After checking that there are no foreign objects in the lock plate groove, install a new O−ring without twisting it.

HINT:
When cleaning the lock plate groove, lightly rub it with sand paper without scratching it.

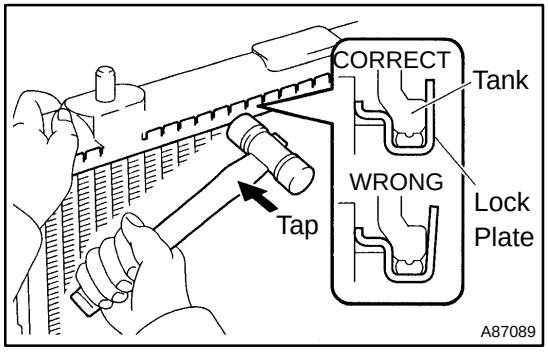

(b) Install the tank without damaging the O−ring.
(c) Tap the lock plate with a soft−faced hammer so that there is no gap between the lock plate and the tank.

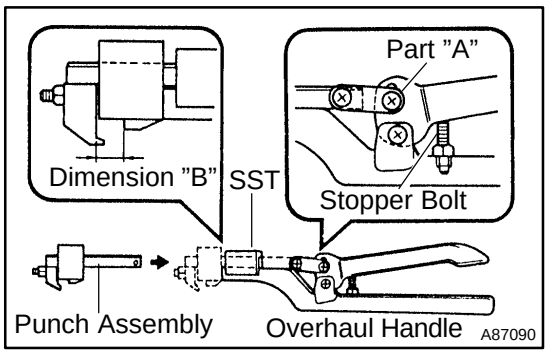

9. ASSEMBLE SST

SST 09230−01010, 09231−14010

(a) Install the punch assembly to the overhaul handle, inserting it in the hole in part ”A” as shown in the illustration.

(b) While gripping the handle, adjust the stopper bolt so that dimension ”B” is as shown in the illustration.

Dimension: 8.4 mm (0.331 in)

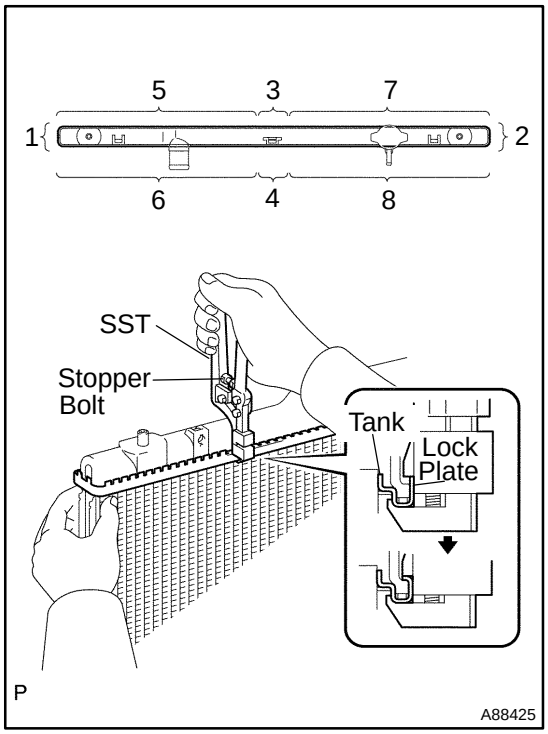

10. CAULK LOCK PLATE

(a) Lightly press SST against the lock plate in the order shown in the illustration. After repeating this a few times, fully caulk the lock plate by gripping the handle until stopped by the stopper plate.

SST 09230−01010

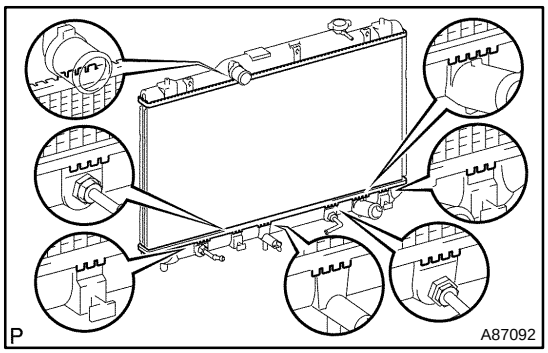

HINT:

- Do not tap the areas protruding around the pipes, brackets or tank ribs.

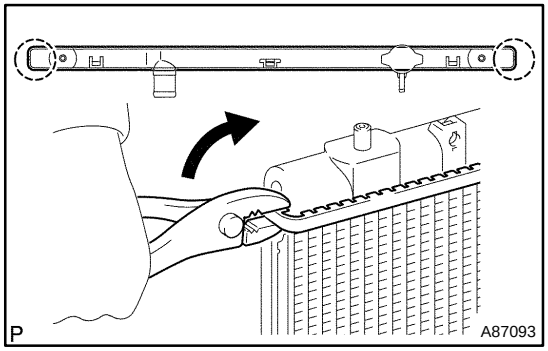

- The points shown in the illustration and oil cooler near here (A/T) cannot be tapped with the SST. Use pliers or similar objects and be careful not to damage the core plates.

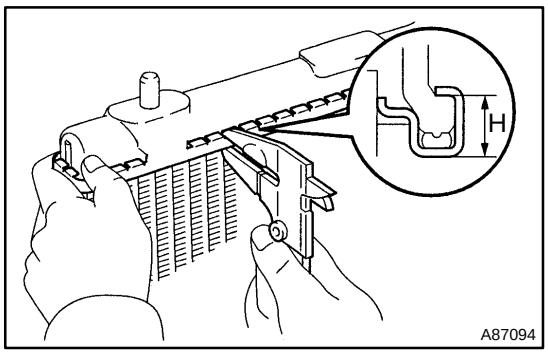

(b) Check the lock plate height (H) after completing the caulking.

Plate height (H): 7.40 to 7.80 mm (0.2913 to 0.3071 in.)

If not within the specified height, adjust the stopper bolt of the handle again and caulk again.

11. INSTALL DRAIN PLUG

(a) Install a new O−ring to the drain plug.

(b) Install the drain plug.

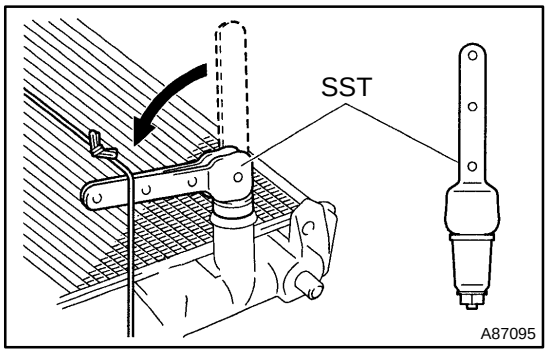

12. INSPECT FOR WATER LEAKS

(a) Plug the inlet and outlet pipes of the radiator with SST.
SST 09230−01010

(b) Using a radiator cap tester, apply pressure to the radiator.
Test pressure: 177 kPa (1.8 kgf/cm^2, 26 psi)

(c) Submerge the radiator in water.

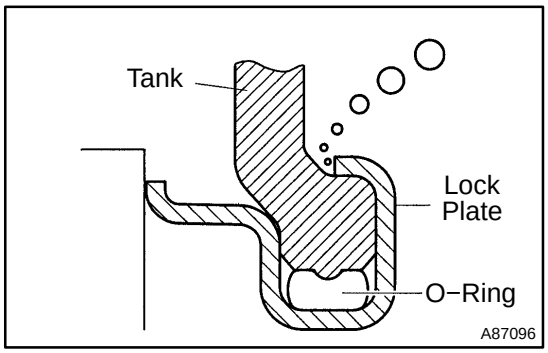

(d) Inspect for leaks.

HINT:

On radiators with resin tanks, there is a clearance between the tank and lock plate where a minute amount of air will remain, giving the appearance of an air leak when the radiator is submerged in water. Therefore, before doing the water leak test, swish the radiator around in the water first until all air bubbles disappear.

COOLING SYSTEM (1MZ−FE/3MZ−FE)

16034−07

ON−VEHICLE INSPECTION

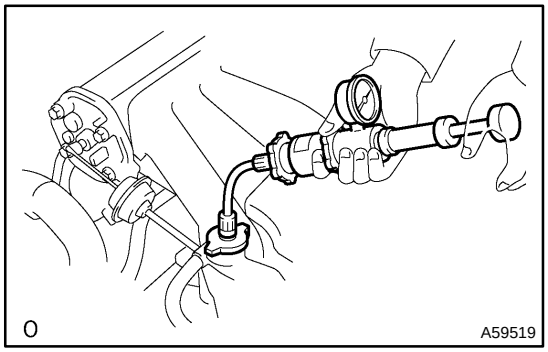

1. INSPECT COOLING SYSTEM FOR LEAKS

CAUTION:

Do not remove the radiator cap while the engine and radiator are still hot. Pressurized, hot engine coolant and steam may be released and cause serious burns.

(a) Fill the radiator with coolant and attach a radiator cap tester.

(b) Warm up the engine.

(c) Using the radiator cap tester, increase the pressure inside the radiator to 118 kPa (1.2 kgf/cm^2, 17.1 psi), and check that the pressure does not drop.

If the pressure drops, check the hoses, radiator or water pump for leaks. If no external leaks are found, check the heater core, cylinder block and head.

2. CHECK ENGINE COOLANT LEVEL AT RESERVOIR

(a) The engine coolant level should be between the ”LOW” and ”FULL” lines, when the engine is cold.

If low, check for leaks and add ”Toyota Super Long Life Coolant” or similar high quality ethylene glycol based non−silicate, non−amine, non−nitrite, and non−borate coolant with long−life hybrid organic acid technology up to the ”FULL” line.

3. CHECK ENGINE COOLANT QUALITY

(a) Remove the radiator cap.

CAUTION:

Do not remove the radiator cap while the engine and radiator are still hot. Pressurized, hot engine coolant and steam may be released and cause serious burns.

(b) Check if there is any excessive deposits of rust or scale around the radiator cap and radiator filler hole. Also, the coolant should be free from oil.

HINT:

If excessively dirty, replace the coolant.

(c) Reinstall the radiator cap.

16035−08

INSPECTION

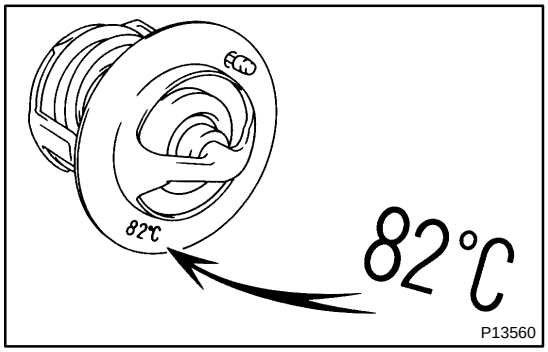

1. INSPECT THERMOSTAT

HINT:

The thermostat is numbered with the valve opening temperature.

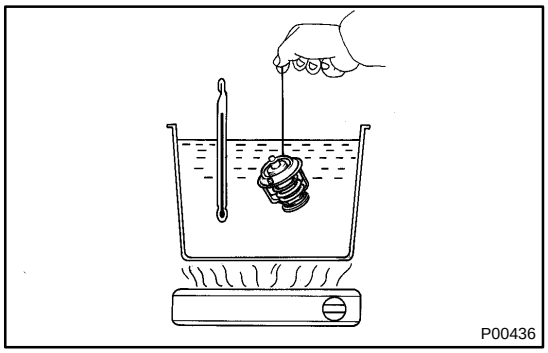

(a) Immerse the thermostat in water and gradually heat the water.

(b) Check the valve opening temperature.

Valve opening temperature: 80 to 84●C (176 to 183●F)

If the valve opening temperature is not as specified, replace the thermostat.

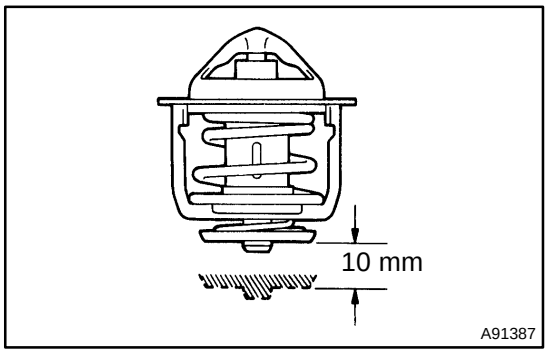

(c) Check the valve lift.

Valve lift: 10 mm (0.394 in.) or more at 95●C (203●F)

If the valve lift is not as specified, replace the thermostat.

(d) Check that the valve is fully closed when the thermostat is at low temperatures (below 77●C (171●F)).

If not closed, replace the thermostat.

2. INSPECT WATER OUTLET CAP SUB−ASSY

NOTICE:

- **If the reservoir cap has contaminations, always rinse it with water.**
- **Before using a radiator cap tester, wet the relief valve and pressure valve with engine coolant or water.**
- **When performing steps (a) and (b) below, keep the tester at an angle of over 30●above the horizontal.**

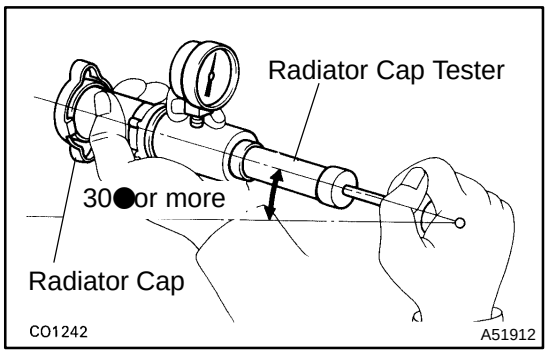

(a) Using a radiator cap tester, slowly pump the tester and check that air is being released from the vacuum valve.

Pump speed: 1 push every 3 seconds or more

NOTICE:

Push the pump at a constant speed.

If air is not being released from the vacuum valve, replace the reservoir cap.

(b) Pump the tester and measure the relief valve opening pressure.

Pump speed: 1 push within 1 second

NOTICE:

The pump speed above should be followed for the first pump only. it will close the vacuum valve. Once the vacuum is colosed, the pump speed can be reduced.

Standard opening pressure:

69.0 to 112.8 kPa (0.70 to 1.15 kgf/cm^2, 10.0 to 16.4 psi)

HINT:

Use the tester's maximum reading as the opening pressure. If the maximum reading is less than the minimum opening pressure above, replace the radiator cap.

COOLING FAN SYSTEM (1MZ−FE/3MZ−FE)

16036−07

ON−VEHICLE INSPECTION

HINT:

The cooling fan may rotate when the ignition switch is turned from ACC to ON. This is normal.

1. CHECK COOLING FAN OPERATION WITH LOW TEMPERATURE (Below 83°C (181°F))

(a) Turn the ignition switch ON.

(b) Check that the cooling fan stops.

If not, check the cooling fan relay and ECT switches, and check for disconnected connectors or wire breaks between the cooling fan relay and ECT switches.

(c) Disconnect the ECT switch No. 1 connector.

(d) Connect the terminals on the ECT switch No. 1 connector.

(e) Check that the No. 1 cooling fan rotates at a high speed.

If not, check the No. 1 cooling fan relay and No. 1 cooling fan.

(f) Reconnect the ECT switch No. 1 connector.

(g) Disconnect the ECT switch No. 2 connector.

(h) Ground the terminal on the ECT switch No. 2 wire harness side connector.

(i) Check that the No. 1 and No. 2 cooling fans rotate at a low speed.

If not, check the No. 2 cooling fan relay, No. 3 cooling fan relay and No. 2 cooling fan.

(j) Reconnect the ECT switch No. 2 connector.

2. CHECK COOLING FAN

(a) Disconnect the cooling fan connector.

(b) Connect battery and ammeter to the cooling fan connector.

(c) Check that the cooling fan rotates smoothly, and check the reading on the ammeter.

Standard amperage: 8.0 to 12.0 A at 20°C (68°F)

If not, replace the cooling fan.

(d) Reconnect the cooling fan connector.

160Q8−01

INSPECTION

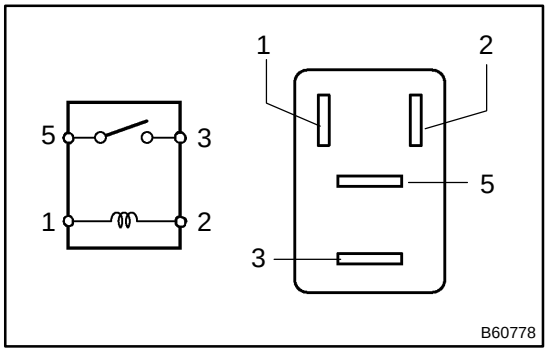

1. INSPECT RELAY (FAN NO. 1, FAN NO. 3)

(a) Check the resistance of the relay.

Standard:

Tester Connection	Specified Condition
3 − 5	10 kΩ or higher
3 − 5	Below 1 Ω (when battery voltage is applied to terminals 1 and 2)

If the result is not as specified, replace the relay.

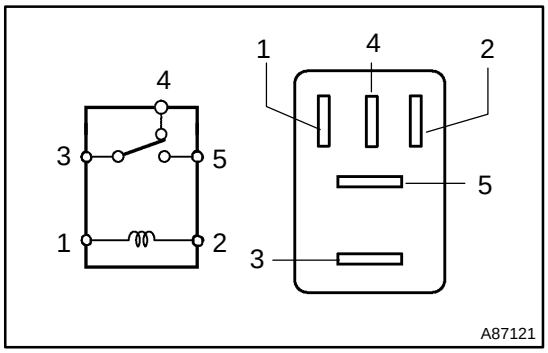

2. INSPECT RELAY (FAN NO. 2)

(a) Check the resistance of the relay.

Standard:

Tester Connection	Specified Condition
3 − 4	Below 1 Ω
3 − 5	10 kΩ or higher
3 − 5	Below 1 Ω (when battery voltage is applied to terminals 1 and 2)

If the result is not as specified, replace the relay.

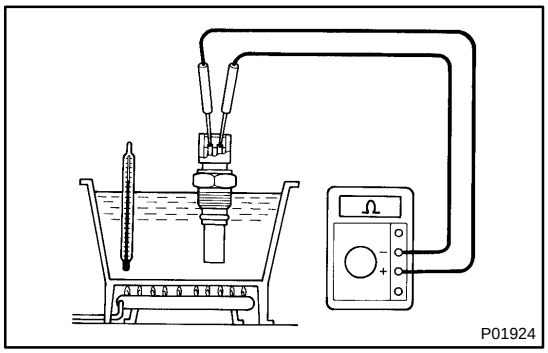

3. INSPECT ECT SWITCH (NO. 1)

(a) Check the resistance.

Standard:

Temperature	Specified Condition
Above 98°C (208°F)	Below 1 Ω
Below 88°C (190°F)	10 kΩ or higher

If the result is not as specified, replace the switch.

NOTICE:

When checking the ECT sensor in the water, the terminals should be kept dry. After the check dry the sensor.

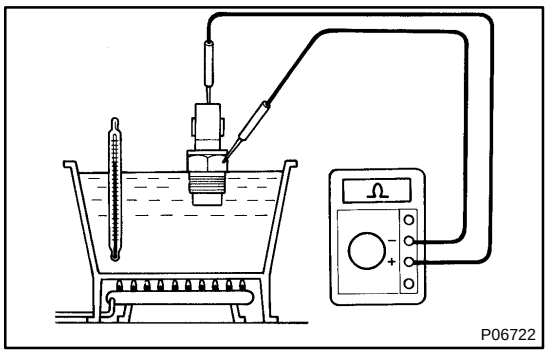

4. INSPECT ECT SWITCH (NO. 2)

(a) Check the resistance.

Standard:

Temperature	Specified Condition
Above 93●C (199●F)	Below 1 Ω
Below 83●C (181●F)	10 kΩ or higher

If the result is not as specified, replace the switch.

NOTICE:

When checking the ECT sensor in the water, the terminals should be kept dry. After the check dry the sensor.

COOLANT (1MZ−FE/3MZ−FE)

16038−09

REPLACEMENT

1. DRAIN ENGINE COOLANT

(a) Remove the radiator cap.

CAUTION:

Do not remove the radiator cap while the engine and radiator are still hot. Pressurized, hot engine coolant and steam may be released and cause serious burns.

(b) Drain engine coolant by loosening the radiator drain cock plug and the engine's cylinder block drain cock plug.

HINT:

Engine coolant inside the radiator is drained from the drain hole located on the bottom of the engine under cover.

(c) Tighten the cylinder block drain cock plugs.

Torque: 13 N·m (130 kgf·cm, 10 ft·lbf)

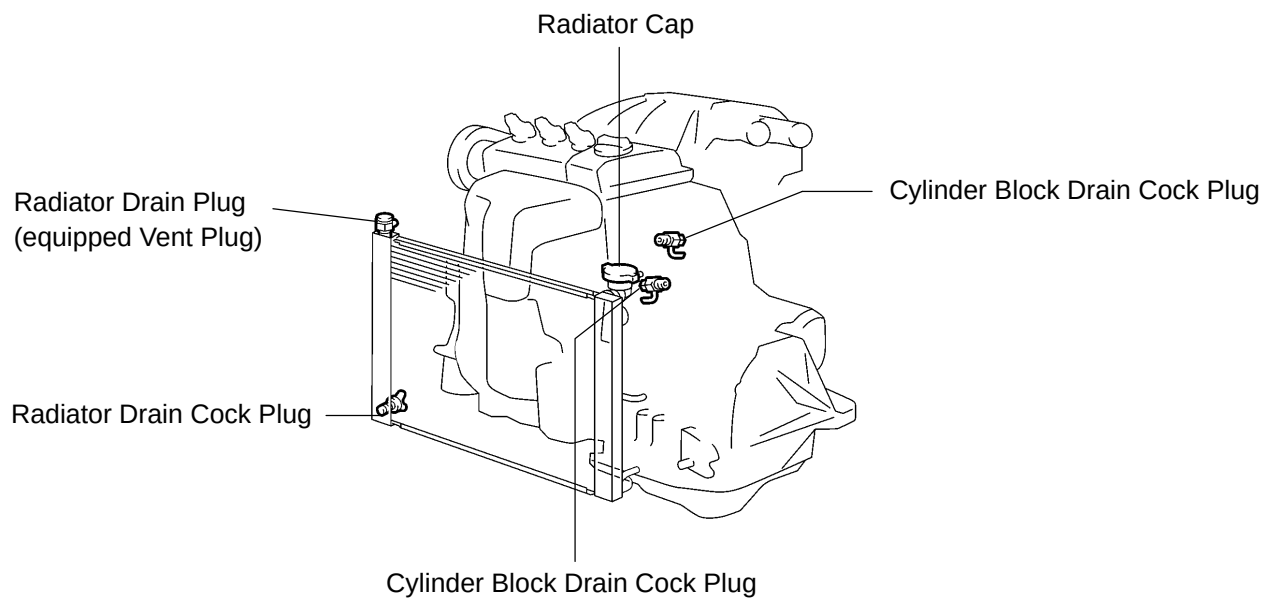

2. ADD ENGINE COOLANT

(a) Tighten the radiator drain plug.

(b) Add engine coolant into the radiator until it overflows.

Capacity: 9.2 liters (9.7 US qts, 8.1 lmp. qts)

HINT:

- Use of improper coolants may damage the engine cooling system.
- Use "Toyota Super Long Life Coolant" or similar high quality ethylene glycol based non−silicate, non−amine, non−nitrite, and non−borate coolant with long−life hybrid organic acid technology.
- New Toyota vehicles are filled with Toyota Super Long Life Coolant (color is pink, premixed ethylene−glycol concentration is approximately 50% and freezing temperature is −35 C (−31 F)). When replacing the coolant, Toyota Super Long Life Coolant is recommended.
- Observe the coolant level inside the radiator by pressing the inlet and outlet radiator hoses several times by hand. If the coolant level goes down, add the coolant.

NOTICE:
Do not use plain water alone.

(c) Pour coolant into the radiator reservoir tank until the coolant reaches the full line.
(d) Installl the radiator cap.
(e) Warm up the engine.

HINT:

As the engine warms up, press the inlet and outlet radiator hoses several times by hand.

(f) Stop the engine and wait until the coolant cools down to room temperature.
(g) Remove the radiator cap and check the coolant level inside the radiator.
(h) If the coolant level is below the full level, repeat steps (c) to (g) until the coolant level stays the same from step (c) to (g).
(i) Install the radiator cap and the check the radiator reservoir tank coolant level. If it is below the full line, add coolant.

3. CHECK FOR ENGINE COOLANT LEAKS

(a) Fill the radiator with coolant and attach a radiator cap tester.
(b) Pump it to 118 kPa (1.2 kgf/cm^2, 17.1 psi) and check leakage.

WATER PUMP ASSY (1MZ−FE/3MZ−FE)

1602G−14

REPLACEMENT

1. **DRAIN ENGINE COOLANT (See page 16−27)**
2. **REMOVE FRONT WHEEL RH**
3. **REMOVE FRONT FENDER APRON SEAL RH**
4. **REMOVE V BELT NO. 1 (See page 14−140)**
5. **REMOVE VANE PUMP V BELT (See page 14−140)**
6. **REMOVE ENGINE MOVING CONTROL ROD (See page 14−164)**
7. **REMOVE ENGINE MOUNTING STAY NO.2 RH (See page 14−164)**
8. **REMOVE GENERATOR BRACKET NO.2**
9. **REMOVE CRANKSHAFT PULLEY (See page 14−186)**
10. **REMOVE TIMING BELT NO.1 COVER (See page 14−186)**
11. **REMOVE TIMING BELT NO.2 COVER (See page 14−186)**
12. **REMOVE ENGINE MOUNTING BRACKET RH**
13. **REMOVE TIMING BELT GUIDE NO.2**
14. **REMOVE TIMING BELT (See page 14−186)**

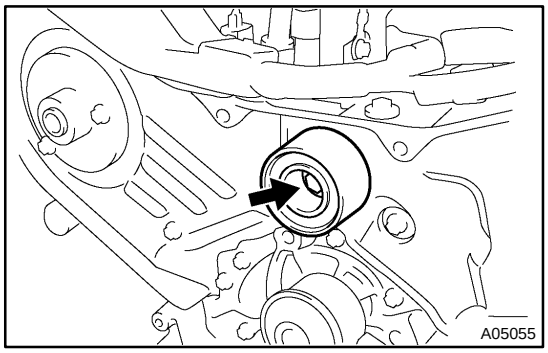

15. **REMOVE TIMING BELT IDLER SUB−ASSY NO.2**
(a) Remove the bolt and timing belt idler.

16. **REMOVE CAMSHAFT TIMING PULLEY (See page 14−186)**
17. **REMOVE TIMING BELT NO.3 COVER (See page 14−186)**

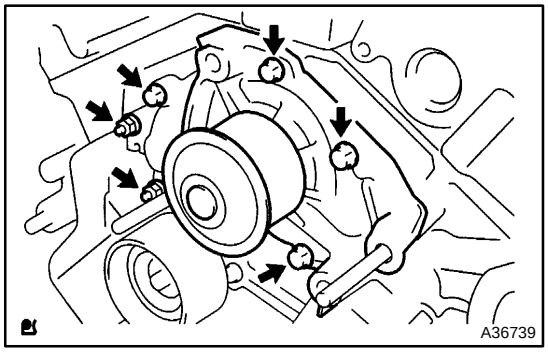

18. **REMOVE WATER PUMP ASSY**
(a) Remove the 4 bolts, 2 nuts and water pump.

19. **INSTALL WATER PUMP ASSY**
(a) Install a new gasket and the water pump with the 4 bolts and 2 nuts.
Torque: 8 N·m (82 kgf·cm, 71 in.·lbf)
20. **INSTALL TIMING BELT NO.3 COVER (See page 14−186)**
21. **INSTALL CAMSHAFT TIMING PULLEY (See page 14−186)**

22. INSTALL TIMING BELT IDLER SUB−ASSY NO.2
    Torque: 43 N·m (438 kgf·cm, 32 ft·lbf)
23. INSPECT TIMING BELT (See page 14−186)
24. INSTALL TIMING BELT (See page 14−186)
25. INSTALL TIMING BELT GUIDE NO.2
26. INSTALL ENGINE MOUNTING BRACKET RH
    Torque: 28 N·m (286 kgf·cm, 21 ft·lbf)
27. INSTALL TIMING BELT NO.2 COVER (See page 14−186)
28. INSTALL TIMING BELT NO.1 COVER (See page 14−186)
29. INSTALL CRANKSHAFT PULLEY (See page 14−186)
30. INSTALL GENERATOR BRACKET NO.2
    Torque: 28 N·m (286 kgf·cm, 21 ft·lbf)
31. INSTALL ENGINE MOUNTING STAY NO.2 RH (See page 14−164)
32. INSTALL ENGINE MOVING CONTROL ROD (See page 14−164)
33. INSTALL VANE PUMP V BELT (See page 14−140)
34. INSTALL V BELT NO. 1 (See page 14−140)
35. INSPECT DRIVE BELT TENSION (See page 14−136)
36. ADD ENGINE COOLANT (See page 16−27)
37. CHECK FOR ENGINE COOLANT LEAKS (See page 16−21)
38. INSTALL FRONT WHEEL RH

160Q1−02

INSPECTION

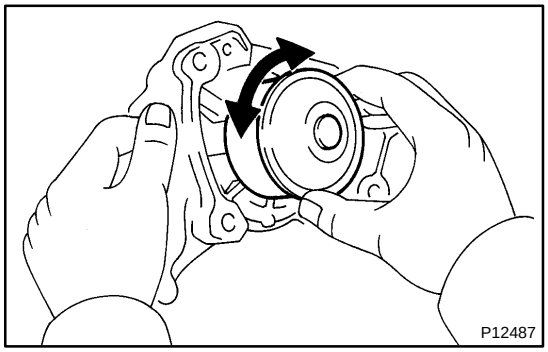

1. INSPECT WATER PUMP ASSY

(a) Visually check the drain hole for coolant leakage.

(b) Turn the pulley, and check that the water pump bearing moves smoothly and noiselessly.

If the bearing moves roughly or noisily, replace the water pump.

THERMOSTAT (1MZ−FE/3MZ−FE)

1602F−08

REPLACEMENT

1. DRAIN ENGINE COOLANT (See page 16−27)
2. REMOVE AIR CLEANER INLET ASSY
3. REMOVE AIR CLEANER ASSEMBLY WITH HOSE
4. REMOVE AIR CLEANER BRACKET
5. REMOVE AIR CLEANER INLET NO.1
6. DISCONNECT RADIATOR HOSE OUTLET
7. REMOVE WATER INLET PIPE
(a) Remove the bolt and inlet pipe.
8. REMOVE WATER INLET
(a) Remove the 3 bolts and water inlet.
9. REMOVE THERMOSTAT

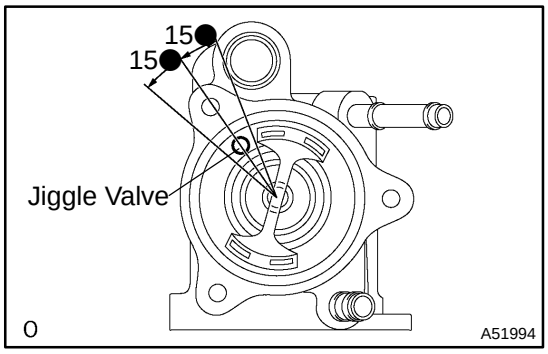

10. INSTALL THERMOSTAT
(a) Install a new gasket to the thermostat.
(b) Align the thermostat jiggle valve with the upper stud bolt, and insert the thermostat in the water inlet housing.

HINT:
The jiggle valve may be set within 15● of either side of the prescribed position.

11. INSTALL WATER INLET
Torque: 8 N·m (82 kgf·cm, 71 in.·lbf)
12. INSTALL WATER INLET PIPE
(a) Install a new O−ring to the inlet pipe.
(b) Apply soapy water to the O−ring.
(c) Connect the inlet pipe to the water inlet.
(d) Install the bolt holding the inlet pipe to the cylinder head.
Torque: 20 N·m (204 kgf·cm, 15 ft·lbf)
13. INSTALL AIR CLEANER ASSEMBLY WITH HOSE
14. CONNECT VACUUM HOSES
15. ADD ENGINE COOLANT (See page 16−27)
16. CHECK FOR ENGINE COOLANT LEAKS (See page 16−21)

RADIATOR ASSY (1MZ−FE/3MZ−FE)

160Q2−02

ON−VEHICLE CLEANING

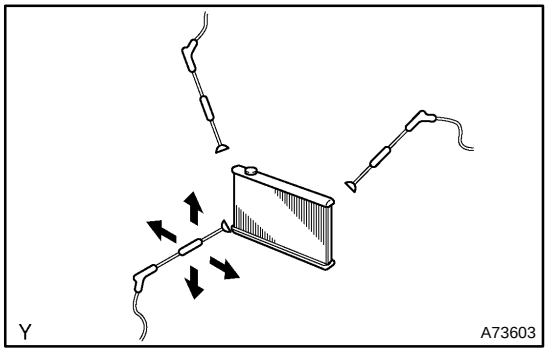

1. INSPECT FINS BLOCKAGE

(a) If the fins are clogged, wash them with water or a steam cleaner. Dry with compressed air.

NOTICE:

- **If the distance between the steam cleaner and the core is too close, the fins may become damaged. Keep the following injection distance.**

  Standard:

Injection Distance	Injection Pressures
300 mm (11.81 in.)	2,942 to 4,903 kPa (30 to 50 kg/cm^2, 427 to 711 psi)
500 mm (19.69 in.)	4,903 to 7,845 kPa (50 to 80 kg/cm^2, 711 to 1,138 psi)

- **If the fins are bent, straighten them with a screwdriver or pliers.**
- **Never apply water directly onto the electronic components.**

160Q3−02

COMPONENTS

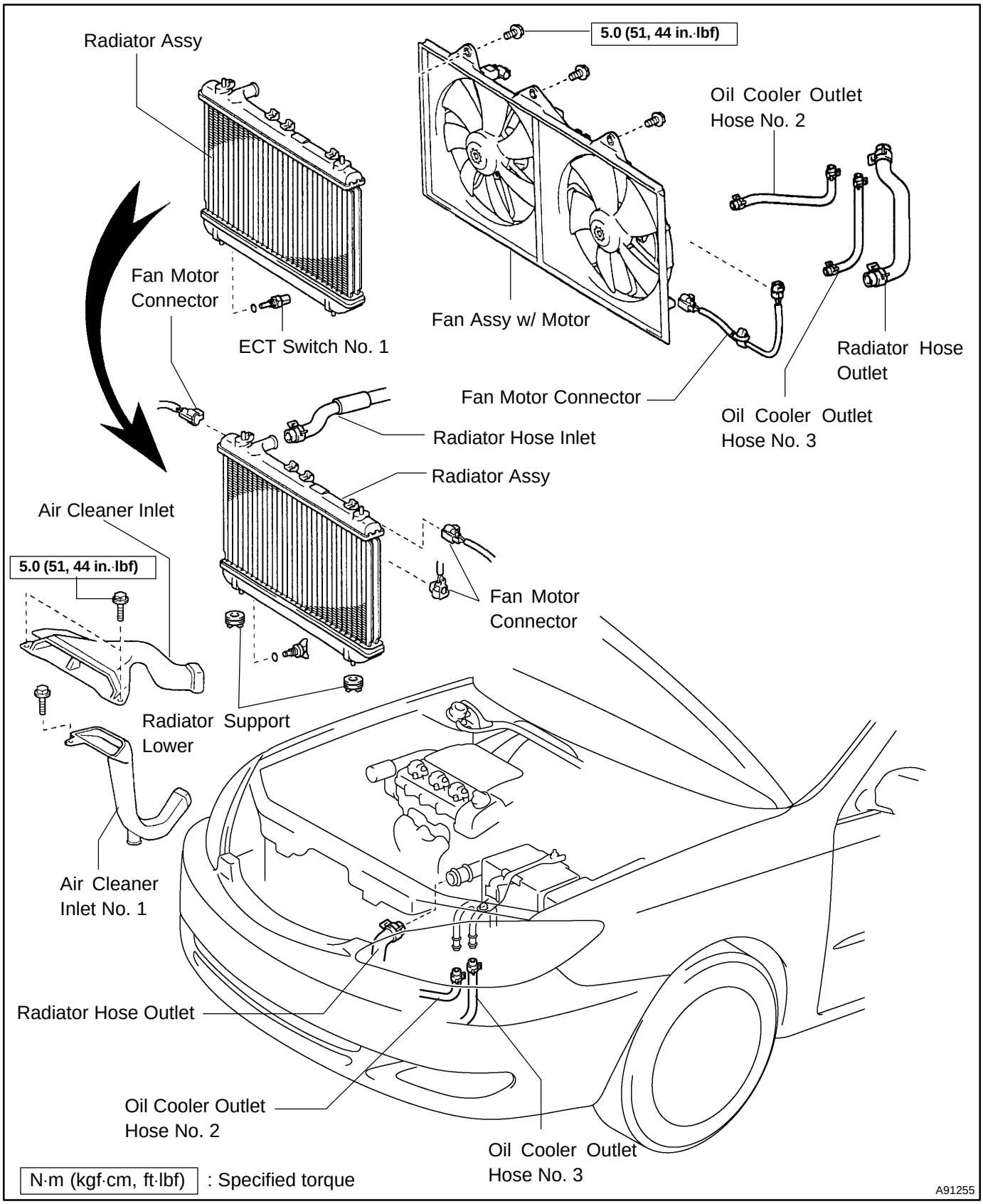

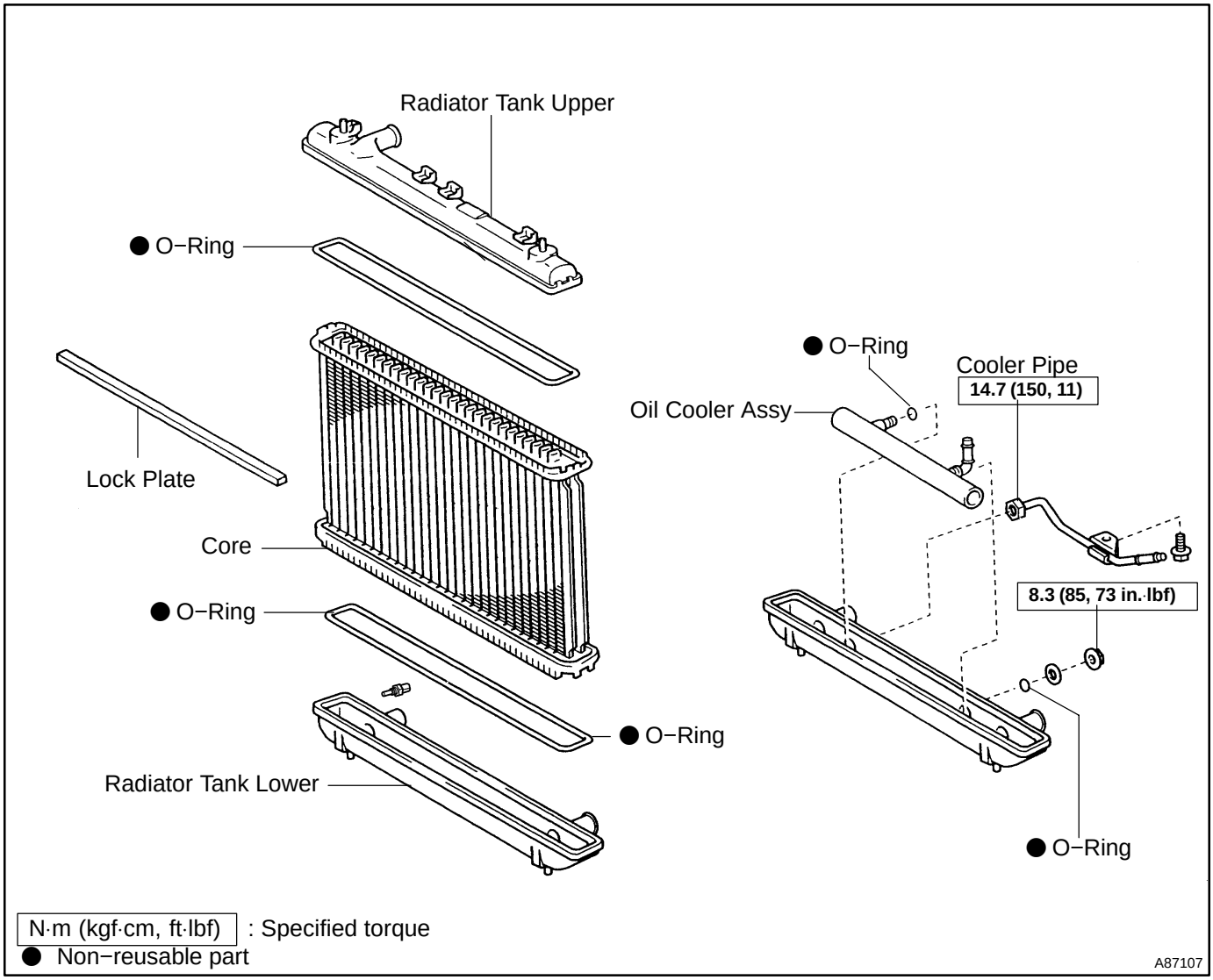

N·m (kgf·cm, ft·lbf) : Specified torque
● Non−reusable part

A87107

160Q4−02

REPLACEMENT

1. **DRAIN ENGINE COOLANT (See page 16−27)**
2. **DISCONNECT BREATHER HOSE**
3. **DISCONNECT RADIATOR HOSE INLET**
4. **DISCONNECT RADIATOR HOSE OUTLET**
5. **DISCONNECT OIL COOLER OUTLET HOSE NO.2**
6. **DISCONNECT OIL COOLER OUTLET HOSE NO.3**

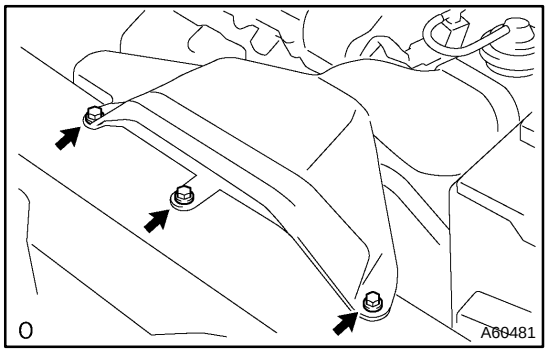

7. REMOVE AIR CLEANER INLET ASSY

(a) Remove the 3 bolts, 2 air cleaner inlets.

8. REMOVE RADIATOR SUPPORT UPPER

(a) Disconnect the 2 horn connectors.

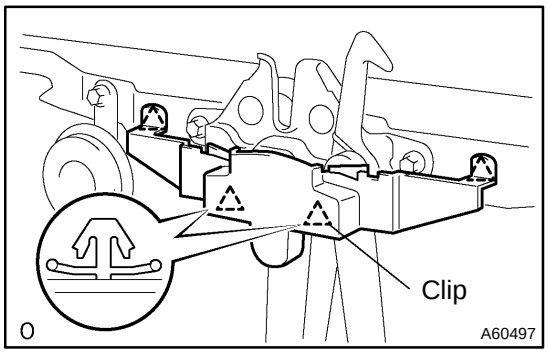

(b) Remove the hood lock release lever cover.

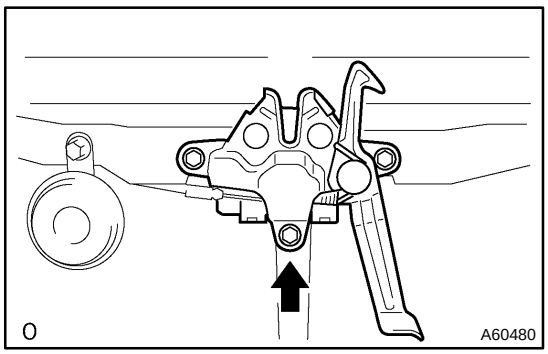

(c) Remove the bolt shown in the illustration.

(d) Remove the 4 bolts and radiator support upper.

9. REMOVE RADIATOR ASSY

(a) Disconnect the fan motor connector.

(b) Disconnect the ECT switch No. 1 connector.

(c) Remove the radiator from the body.

10. REMOVE RADIATOR SUPPORT LOWER

11. REMOVE FAN ASSY W/MOTOR

(a) Remove the 3 bolts and fan w/ motor from the radiator.

12. INSTALL FAN ASSY W/MOTOR

(a) Install the fan w/ motor to the radiator with the 3 bolts.
Torque: 5.0 N·m (51 kgf·cm, 44 in.·lbf)

13. INSTALL RADIATOR ASSY

(a) Install the radiator to the body.

(b) Connect the ECT switch No. 1 connector.

(c) Connect the fan motor connector.

14. INSTALL RADIATOR SUPPORT UPPER

(a) Install the radiator support upper with the 4 bolts.
Torque: 14 N·m (142 kgf·cm,10 ft·lbf)

(b) Connect the 2 horn connectors.

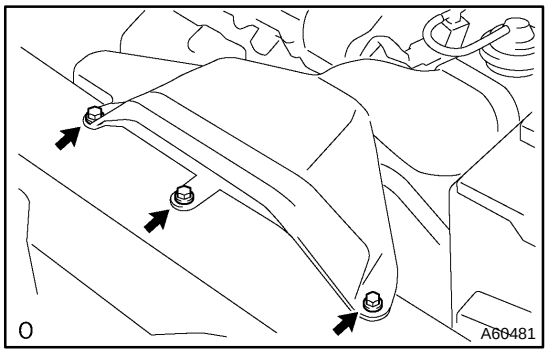

15. INSTALL AIR CLEANER INLET ASSY

(a) Install the 2 air cleaner inlets with the 3 bolts.
Torque: 5.0 N·m (51 kgf·cm, 44 in.·lbf)

16. ADJUST HOOD SUB−ASSY (See page 75−1)

17. ADD ENGINE COOLANT (See page 16−27)

18. CHECK FOR ENGINE COOLANT LEAKS (See page 16−21)

160Q5−04

OVERHAUL

1. REMOVE DRAIN PLUG

(a) Remove the drain plug.

(b) Remove the O−ring.

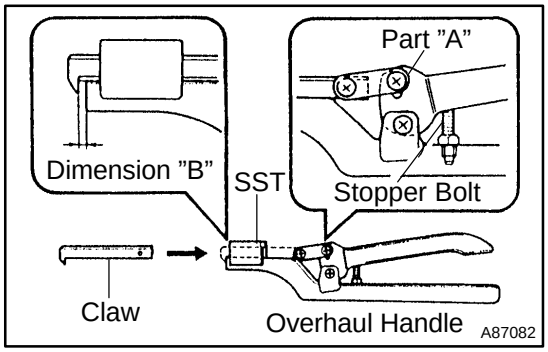

2. ASSEMBLE SST

SST 09230−01010 (09231−01010, 09231−01030)

(a) Install the claw to the overhaul handle, inserting it in the hole in part ”A” as shown in the illustration.

(b) While gripping the handle, adjust the stopper bolt so that dimension ”B” is as shown in the illustration.

Dimension: 0.2 to 0.3 mm (0.008 to 0.012 in.)

NOTICE:

If the stopper bolt is not adjusted, the claw may be damaged.

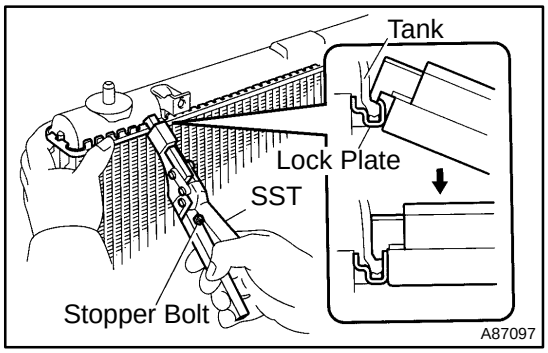

3. REMOVE UNCAULK LOCK PLATE

Using SST to release the caulking, grip the handle until stopped by the stopper bolt.

SST 09230−01010 (09231−01010, 09231−01030)

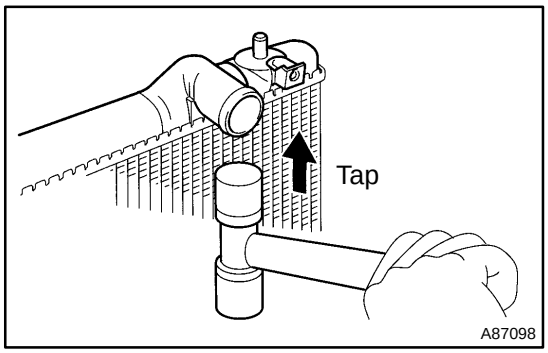

4. REMOVE RADIATOR TANK UPPER AND TANK LOWER

(a) Lightly tap the bracket of the radiator (or radiator hose inlet or outlet) with a soft−faced hammer and remove the tank.

(b) Remove the O−ring.

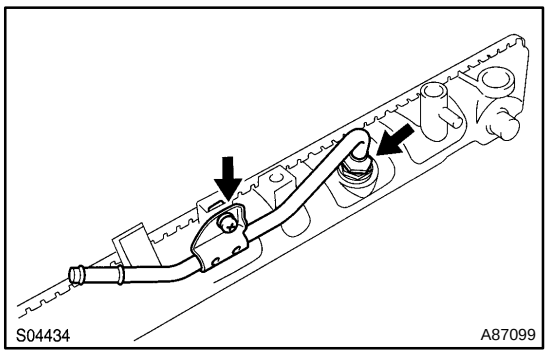

5. REMOVE OIL COOLER ASSY

(a) Remove the screw and pipe.

(b) Remove the nut and plate washer.

(c) Remove the oil cooler.

(d) Remove the 2 O−rings from the oil cooler.

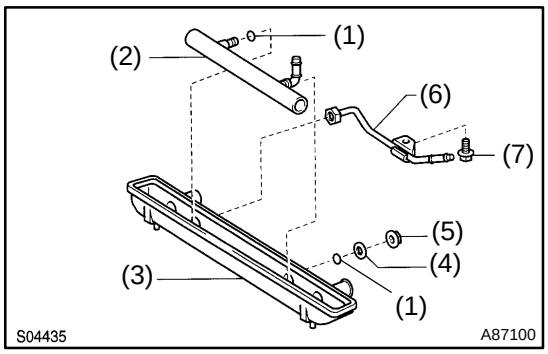

6. INSTALL OIL COOLER ASSY

(a) Clean the O−ring contact surface of the lower tank and oil cooler.
(b) Install 2 new O−rings (1) to the oil cooler (2).
(c) Install the oil cooler to the lower tank (3).
(d) Install the plate washer (4) and nut (5).
Torque: 8.3 N·m (85 kgf·cm, 73 in.·lbf)
(e) Install the pipe (6).
Torque: 14.7 N·m (150 kgf·cm, 11 ft·lbf)
(f) Install the screw (7).

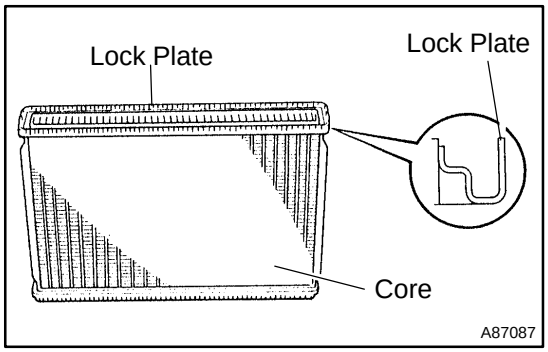

7. INSPECT LOCK PLATE FOR DAMAGE

Inspect the lock plate for damage.

HINT:

- If the sides of the lock plate groove are deformed, reassembly of the tank will be impossible.
  Therefore, correct any deformation with pliers or similar object first.
- Water leakage will result if the bottom of the lock plate groove is damaged or dented. Repair or replace if necessary.

NOTICE:

The radiator can only be recaulked 2 times. After the 2nd time, the radiator core must be replaced.

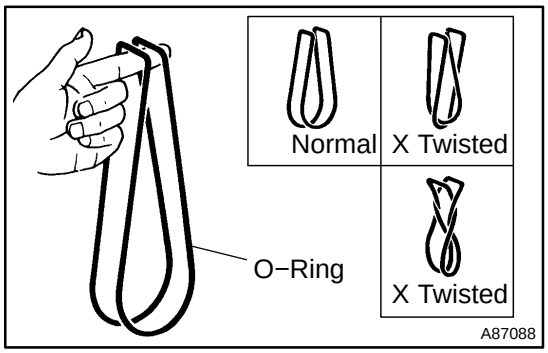

8. INSTALL RADIATOR TANK UPPER AND TANK LOWER

(a) After checking that there are no foreign objects in the lock plate groove, install a new O−ring without twisting it.

HINT:

When cleaning the lock plate groove, lightly rub it with sand paper without scratching it.

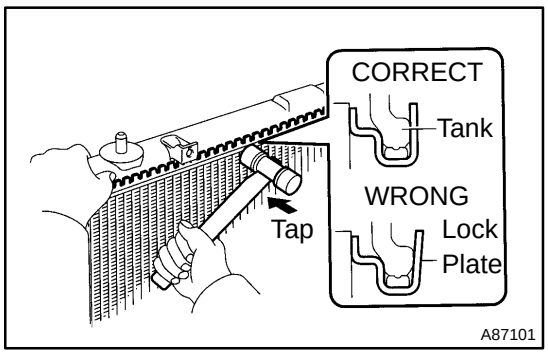

(b) Install the tank without damaging the O−ring.
(c) Tap the lock plate with a soft−faced hammer so that there is no gap between the lock plate and the tank.

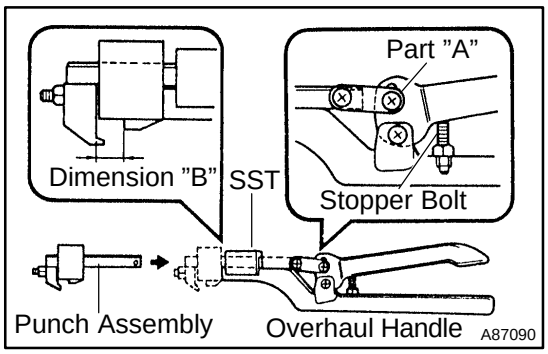

9. ASSEMBLE SST

SST 09230−01010, 09231−14010

(a) Install the punch assembly to the overhaul handle, inserting it in the hole in part ”A” as shown in the illustration.

(b) While gripping the handle, adjust the stopper bolt so that dimension ”B” shown in the illustration.

Dimension ”B”: 8.4 mm (0.331 in.)

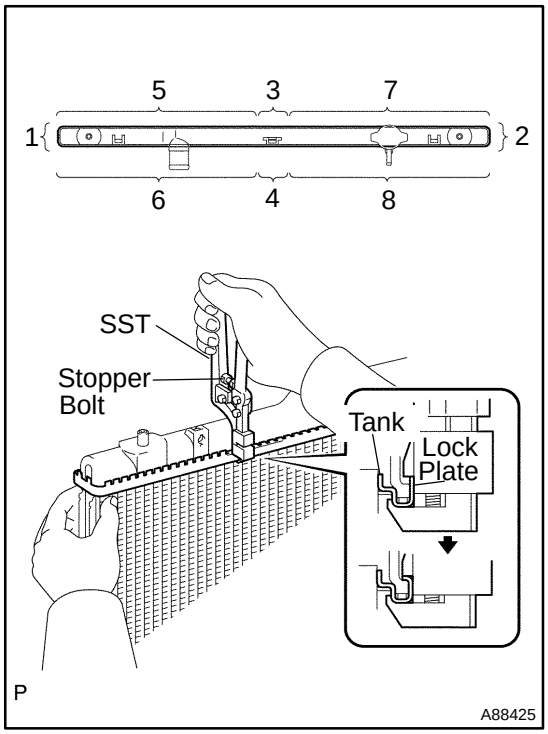

10. CAULK LOCK PLATE

(a) Lightly press SST against the lock plate in the order shown in the illustration. After repeating this a few times, fully caulk the lock plate by gripping the handle until stopped by the stopper plate.

SST 09230−01010

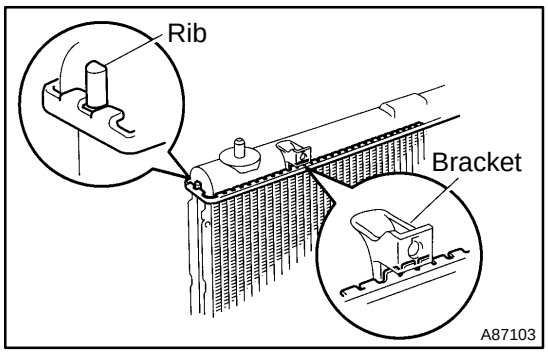

HINT:

- Do not tap the areas protruding around the pipes, brackets or tank ribs.

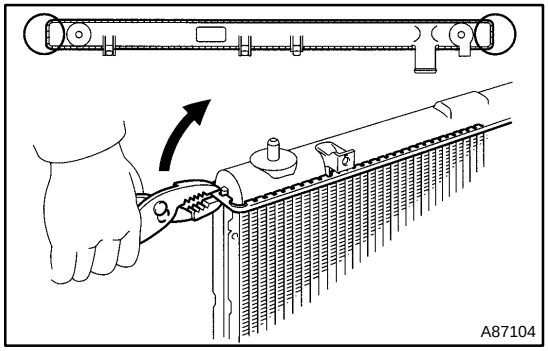

- The points shown in the illustration and oil cooler near here cannot be tapped with the SST. Use pliers or similar objects and be careful not to damage the core plates.

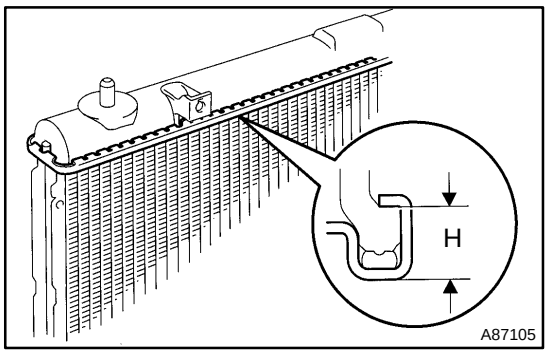

(b) Check the lock plate height (H) after completing the caulking.

Plate height (H): 7.40 to 7.80 mm (0.2913 to 0.3071 in.)

If not within the specified height, adjust the stopper bolt of the handle again and caulk again.

11. INSTALL DRAIN PLUG

(a) Install a new O−ring to the drain plug.

(b) Install the drain plug.

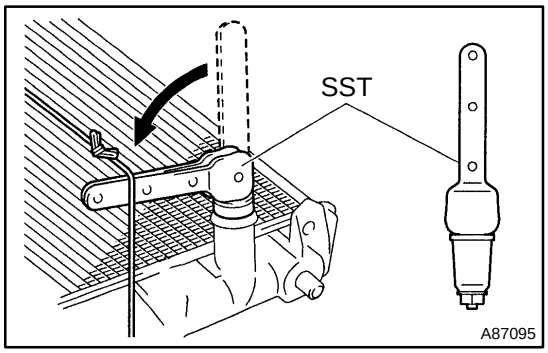

12. INSPECT FOR WATER LEAKS

(a) Plug the inlet and outlet pipes of the radiator with SST.
SST 09230−01010

(b) Using a radiator cap tester, apply pressure to the radiator.
Test pressure: 177 kPa (1.8 kgf/cm^2, 26 psi)

(c) Submerge the radiator in water.

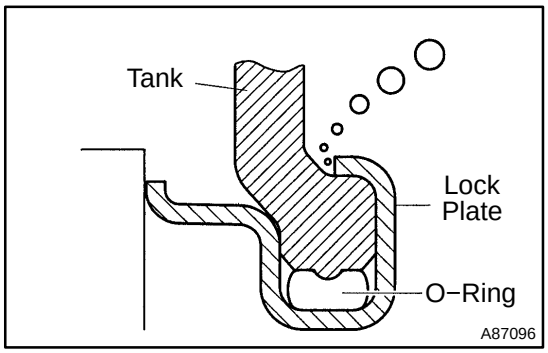

(d) Inspect for leaks.

HINT:

On radiators with resin tanks, there is a clearance between the tank and lock plate where a minute amount of air will remain, giving the appearance of an air leak when the radiator is submerged in water. Therefore, before doing the water leak test, swish the radiator around in the water first until all air bubbles disappear.

LUBRICATION SYSTEM (2AZ−FE)(From July, 2003)

1701Z−10

ON−VEHICLE INSPECTION

1. CHECK ENGINE OIL LEVEL

(a) Warm up the engine, stop the engine and wait for 5 minutes. The oil level should be between the dipstick's low level mark and full level mark.

If the oil level is low, check for leakage and add oil up to the full level mark.

NOTICE:

Do not fill with engine oil above the full level mark.

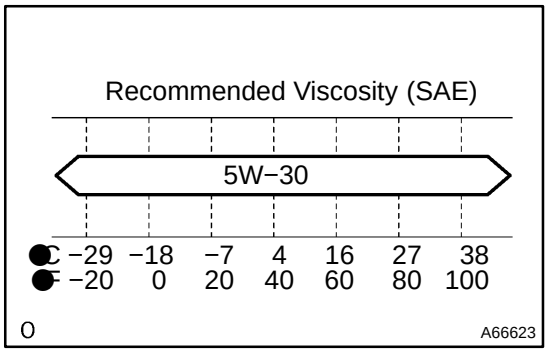

2. CHECK ENGINE OIL QUALITY

(a) Check the oil for deterioration, entry of water, discoloring or thinning.

If the quality is visibly poor, replace the oil.

Oil grade:

ILSAC multigrade engine oil is recommended. SAE 5W−30 is the best choice for your vehicle, for good fuel economy, and good starting in cold weather.

3. REMOVE OIL PRESSURE SWITCH ASSY

(a) Disconnect the oil pressure switch connector.

(b) Remove the oil pressure switch.

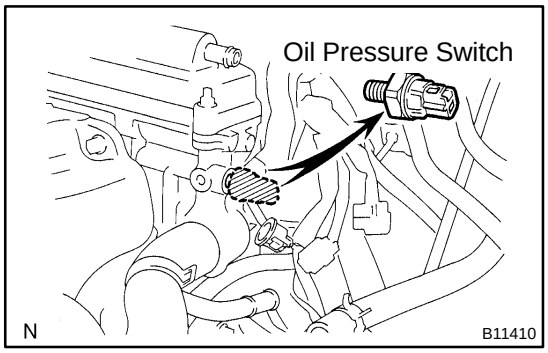

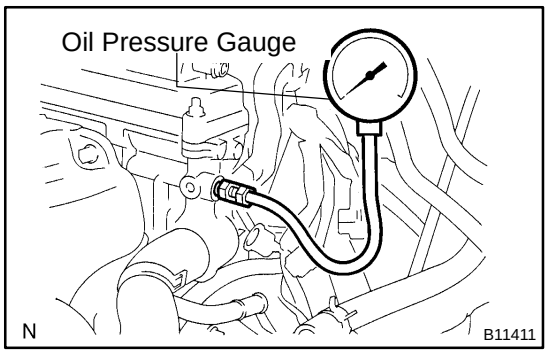

4. INSTALL OIL PRESSURE GAUGE

(a) Install the oil pressure gauge.

5. WARM UP ENGINE

6. CHECK OIL PRESSURE

Specification:

Item	Oil Pressure
Idle	29 kPa (0.3 kgf·cm^2, 4.3 psi) or more
3,000 rpm	245 to 539 kPa (2.5 to 5.5 kgf·cm^2, 36 to 78 psi) or more

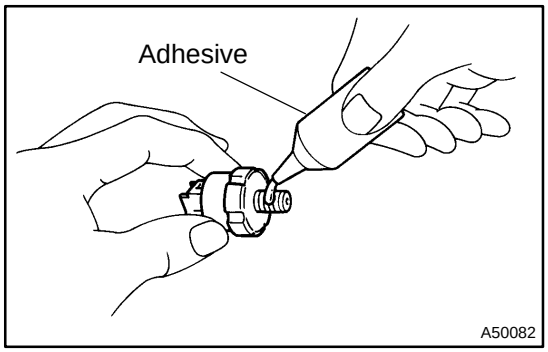

7. INSTALL OIL PRESSURE SWITCH

(a) Remove the oil pressure gauge.

(b) Apply adhesive to 2 or 3 threads of the oil pressure switch.

Adhesive:

Part No. 08833−00080, THREE BOND 1344, LOCTITE 242 or equivalent

(c) Install the oil pressure switch.

Torque: 15 N·m (152 kgf·cm, 11 ft·lbf)

NOTICE:

Do not start the engine for at least 1 hour after installation of the switch.

(d) Connect the oil pressure switch connector.

8. START ENGINE AND CHECK FOR ENGINE OIL LEAKS

OIL FILTER SUB−ASSY (2AZ−FE)(From July, 2003)

1701X−07

REPLACEMENT

CAUTION:

- **Prolonged and repeated contact of mineral oil with the skin will deplete the skin's natural fats, leading to dryness, irritation and dermatitis. In addition, used engine oil contains harmful contaminants which may cause skin cancer.**
- **Wear protective clothing and gloves to minimize the length and frequency of contact between the skin and used oil. If contact does occur wash your skin thoroughly with soap and water or waterless hand cleaner. Do not use gasoline, thinners or solvents to wash the skin.**
- **In order to preserve the environment, dispose of used oil and used oil filters only at designated disposal site.**

1. DRAIN ENGINE OIL

(a) Remove the oil filler cap.

(b) Remove the oil drain plug, and drain the oil into a container.

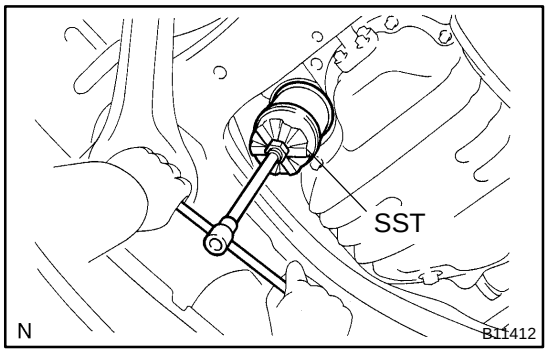

2. REMOVE OIL FILTER SUB−ASSY

(a) Using SST, remove the oil filter.
SST 09228−06501

3. INSTALL OIL FILTER SUB−ASSY

(a) Check and clean the oil filter installation surface.

(b) Apply clean engine oil to the gasket of a new oil filter.

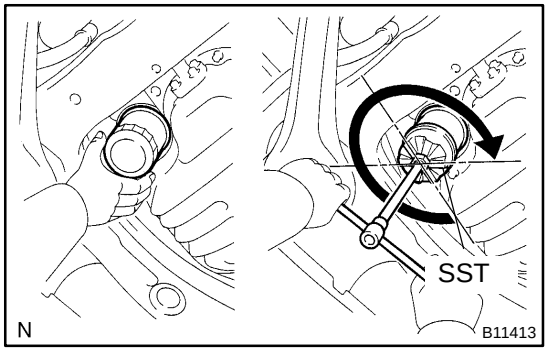

(c) Lightly screw the oil filter into place, and tighten it until the gasket contacts the seat.

(d) Using SST, tighten the oil filter an additional 3/4 turn.
SST 09228−06501

4. ADD ENGINE OIL

(a) Clean and install the oil drain plug with a new gasket.
Torque: 25 N·m (255 kgf·cm, 18 ft·lbf)

(b) Fill with fresh engine oil.
Specification:

Item		Capacity
Drain and refill	w/ oil filter change	3.8 liters (4.0 US qts, 3.3 lmp. qts)
Drain and refill	w/o oil filter change	3.6 liters (3.8 US qts, 3.2 lmp. qts)
Dry fill		4.5 liters (4.88 US qts, 4.0 lmp. qts)

(c) Install the oil filler cap.

5. INSPECT CHECK FOR ENGINE OIL LEAKS

OIL PUMP ASSY (2AZ−FE)(From July, 2003)

170HI−02

COMPONENTS

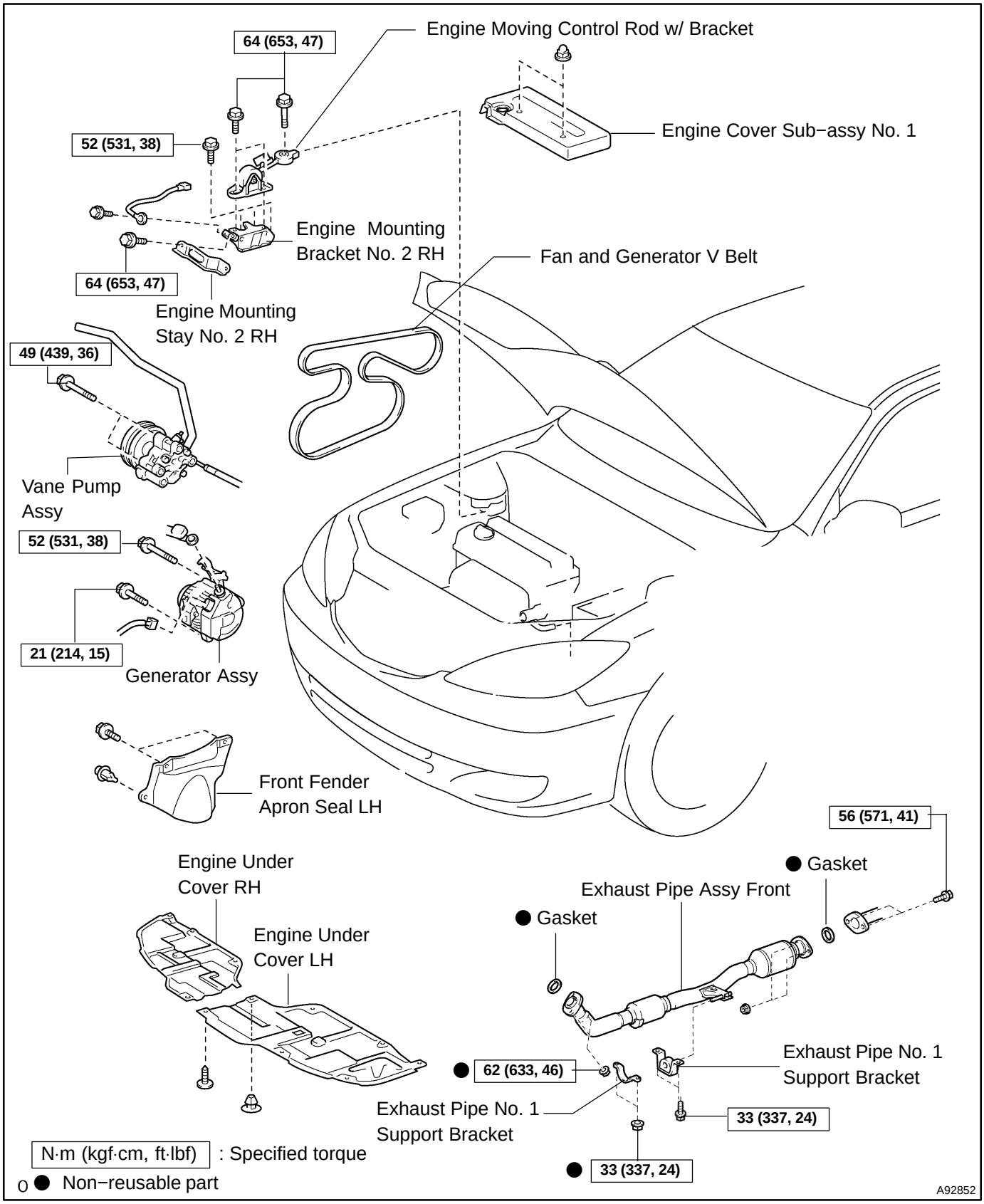

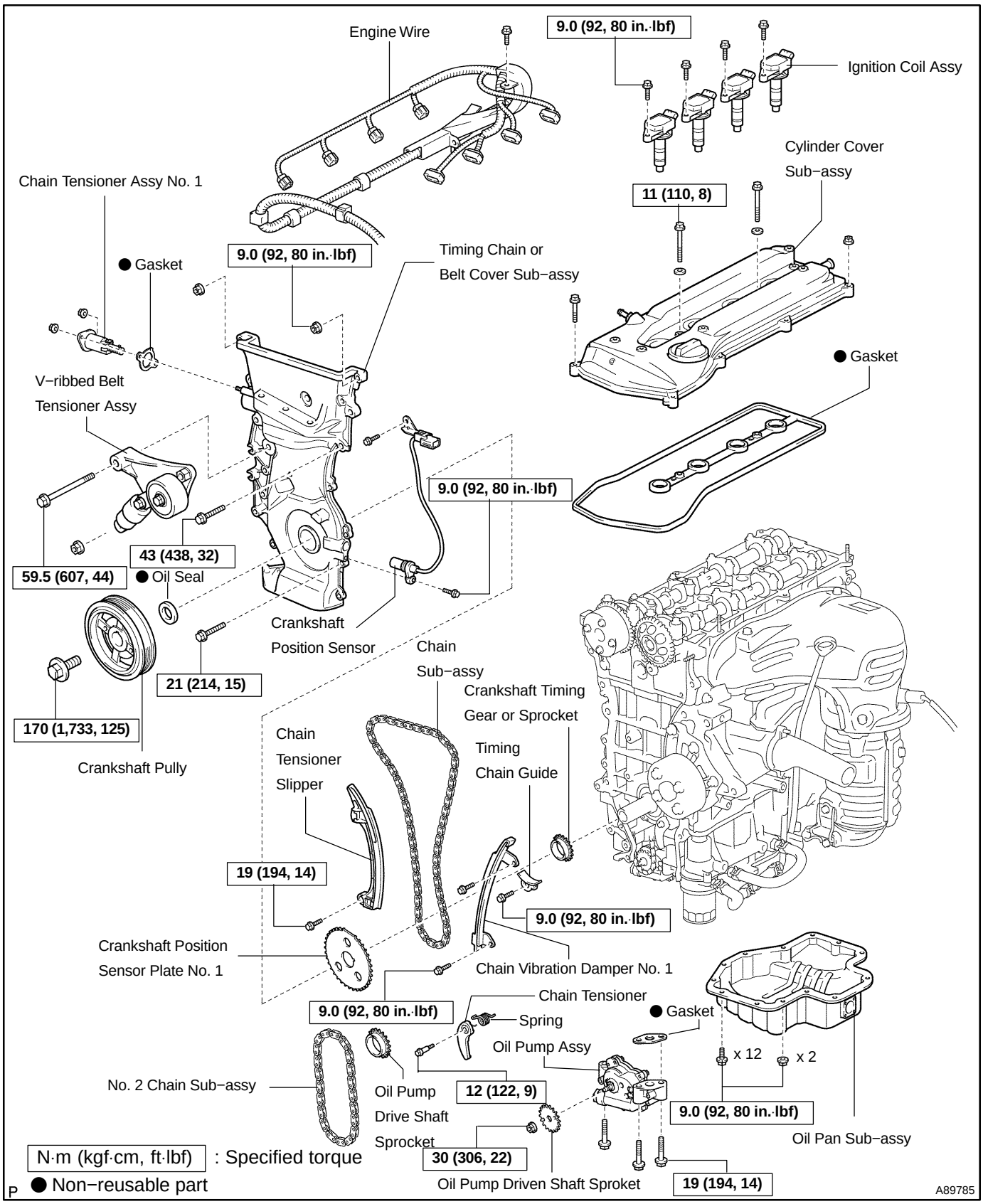
Engine Wire
9.0 (92, 80 in.·lbf)
Ignition Coil Assy
Cylinder Cover
Sub−assy
Chain Tensioner Assy No. 1
11 (110, 8)
● Gasket
9.0 (92, 80 in.·lbf)
Timing Chain or
Belt Cover Sub−assy
● Gasket
V−ribbed Belt
Tensioner Assy
9.0 (92, 80 in.·lbf)
43 (438, 32)
59.5 (607, 44)
● Oil Seal
Crankshaft
Position Sensor
Chain
Sub−assy
Crankshaft Timing
Gear or Sprocket
21 (214, 15)
170 (1,733, 125)
Crankshaft Pully
Chain
Tensioner
Slipper
Timing
Chain Guide
19 (194, 14)
9.0 (92, 80 in.·lbf)
Crankshaft Position
Sensor Plate No. 1
Chain Vibration Damper No. 1
Chain Tensioner
9.0 (92, 80 in.·lbf)
Spring
● Gasket
Oil Pump Assy
x 12
x 2
No. 2 Chain Sub−assy
Oil Pump
Drive Shaft
Sprocket
12 (122, 9)
9.0 (92, 80 in.·lbf)
Oil Pan Sub−assy
30 (306, 22)
Oil Pump Driven Shaft Sproket
19 (194, 14)
N·m (kgf·cm, ft·lbf) : Specified torque
● Non−reusable part
P
A89785

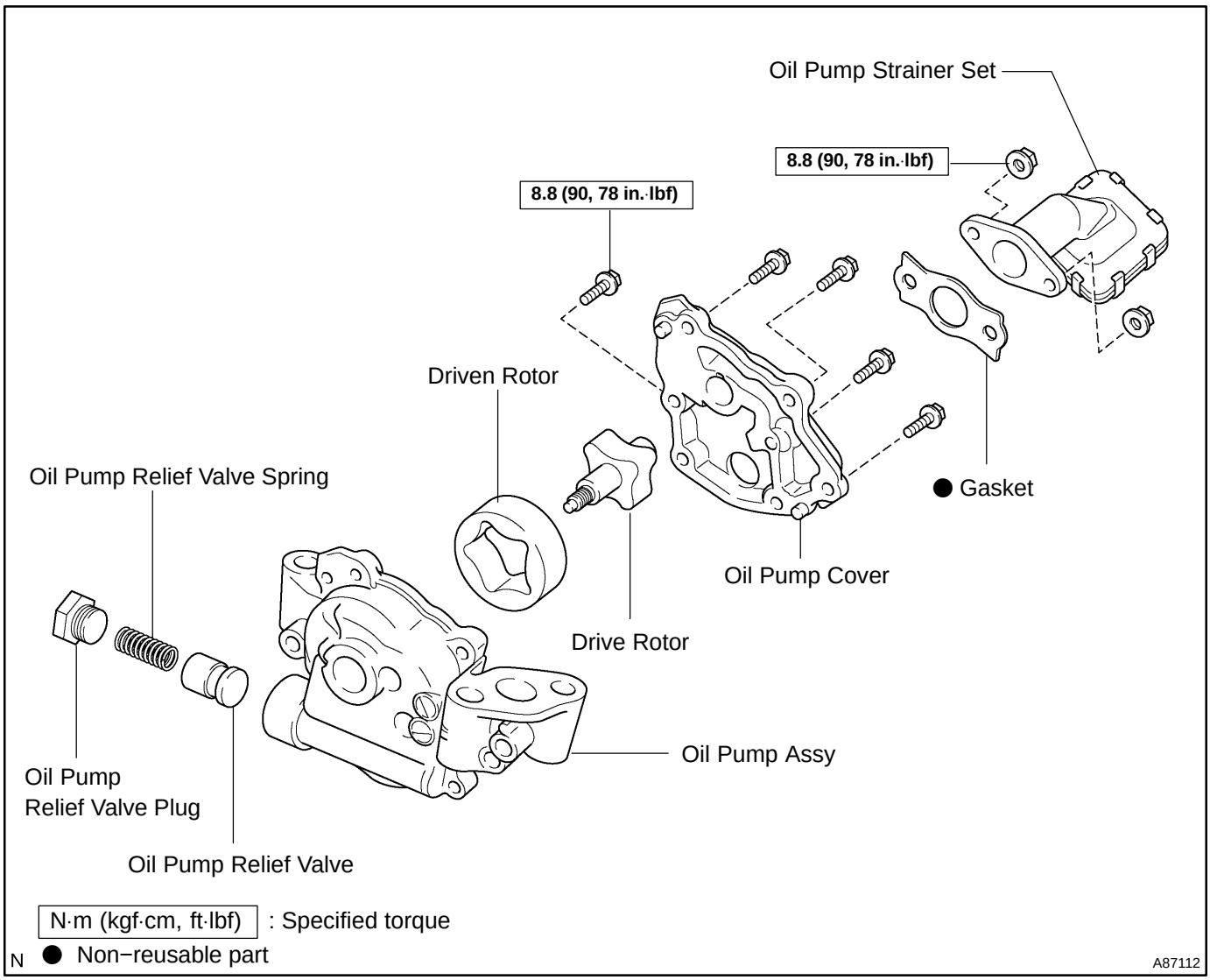
Oil Pump Strainer Set
8.8 (90, 78 in.·lbf)
8.8 (90, 78 in.·lbf)
Driven Rotor
Oil Pump Relief Valve Spring
● Gasket
Oil Pump Cover
Drive Rotor
Oil Pump Assy
Oil Pump
Relief Valve Plug
Oil Pump Relief Valve
N·m (kgf·cm, ft·lbf) : Specified torque
● Non−reusable part
N
A87112

170HJ−03

REPLACEMENT

1. REMOVE FRONT WHEEL RH
2. REMOVE ENGINE UNDER COVER LH
3. REMOVE ENGINE UNDER COVER RH
4. REMOVE FRONT FENDER APRON SEAL RH
5. DRAIN ENGINE OIL

(a) Install a new gasket and the drain plug after draining engine oil.
Torque: 25 N·m (255 kgf·cm, 18 ft·lbf)

6. REMOVE EXHAUST PIPE ASSY FRONT

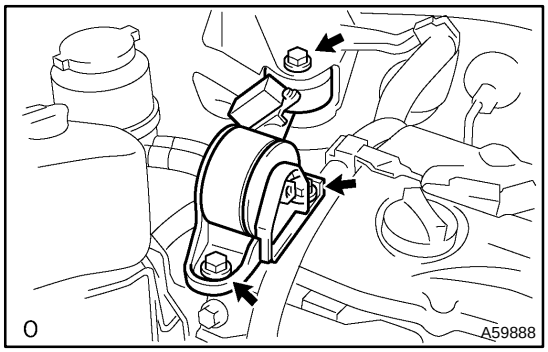

7. REMOVE ENGINE MOVING CONTROL ROD W/BRACKET

(a) Remove the 3 bolts and control rod.

8. REMOVE ENGINE MOUNTING STAY NO.2 RH
9. REMOVE ENGINE MOUNTING BRACKET NO.2 RH
10. REMOVE FAN AND GENERATOR V BELT (See page 14−5)
11. REMOVE ENGINE COVER SUB−ASSY NO.1
12. DISCONNECT ENGINE WIRE
13. REMOVE GENERATOR ASSY (See page 19−17)
14. REMOVE VANE PUMP ASSY (See page 51−8)

NOTICE:
Do not disconnect the hose.

15. REMOVE IGNITION COIL ASSY
16. DISCONNECT VENTILATION HOSE
17. DISCONNECT VENTILATION HOSE NO.2

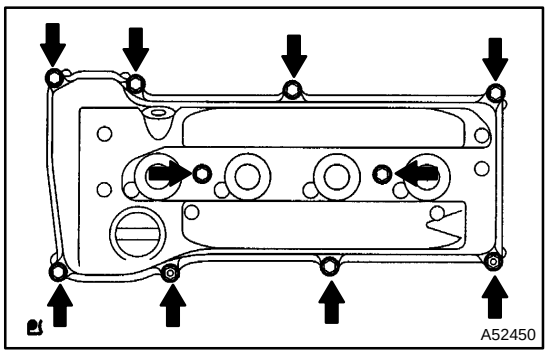

18. REMOVE CYLINDER HEAD COVER SUB−ASSY

(a) Remove the bolt and disconnect the engine wire harness clamp.
(b) Remove the 8 bolts and 2 nuts, and disconnect the cylinder head cover.

19. SET NO. 1 CYLINDER TO TDC/COMPRESSION (See page 14−7)
20. REMOVE CRANKSHAFT PULLEY (See page 14−47)
21. REMOVE CRANKSHAFT POSITION SENSOR

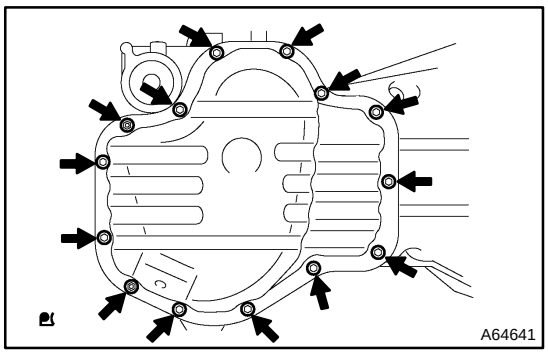

22. REMOVE OIL PAN SUB−ASSY

(a) Remove the 12 bolts and 2 nuts.

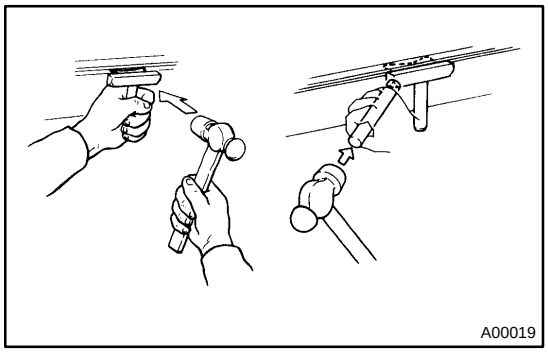

(b) Insert the blade of SST between the crankcase and oil pan, cut through applied sealer and remove the oil pan.
SST 09032−00100

NOTICE:

Do not damage the contact surface of the cylinder block and oil pan.

23. REMOVE CHAIN TENSIONER ASSY NO.1 (See page 14−47)

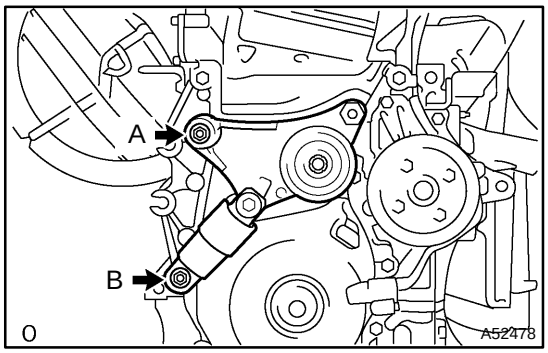

24. REMOVE V−RIBBED BELT TENSIONER ASSY

(a) Remove the bolt labeled A and the bolt labeled B. Then remove the tensioner.

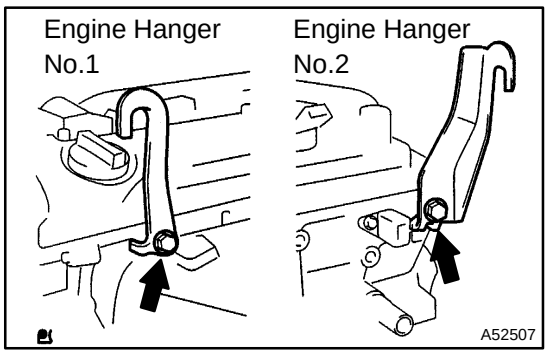

25. REMOVE ENGINE HANGER NO.1

(a) Install the engine hanger No. 1 and No. 2 with their respective bolts, as shown in the illustration.
Parts No.:

Engine hanger No. 1	12281−28010
Engine hanger No. 2	12282−28010
Bolt	91512−61020

Torque: 38 N·m (387 kgf·cm, 28 ft·lbf)

26. REMOVE ENGINE MOUNTING INSULATOR

(a) Attach the engine chain hoist to the engine hangers.

CAUTION:

Do not attempt to hang the engine by hooking the chain to any other part.

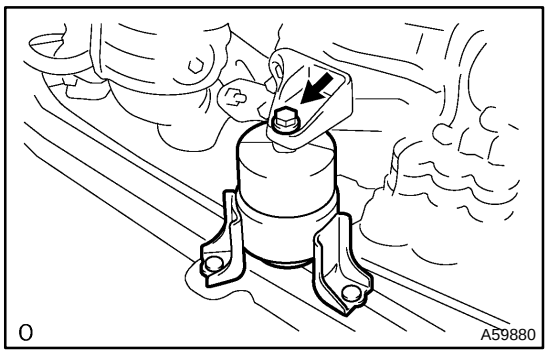

(b) Remove the bolt and disconnect the engine mounting insulator FR.

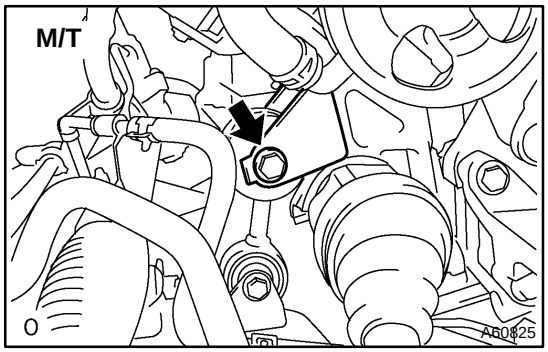

(c) M/T:
Remove the bolt and disconnect the engine lateral control rod.

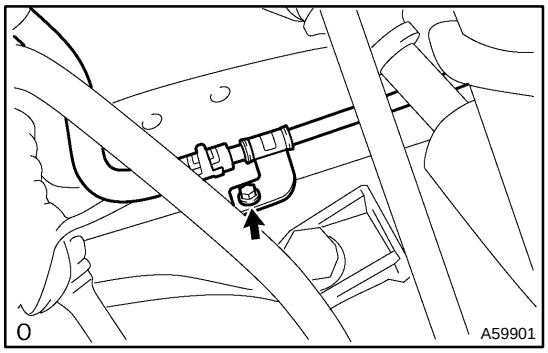

(d) Remove the bolt and disconnect the steering gear return hose clamp from the frame.

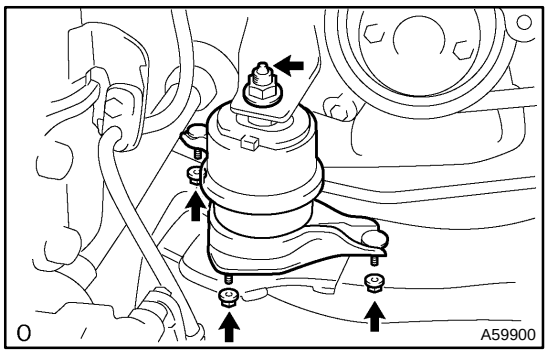

(e) Remove the 4 nuts from the engine mounting insulator RH.
(f) Prepare a jack. Place a wooden block on the jack and set the jack under the engine. Remove the engine mounting insulator.
(g) Raise the jack and lift up the engine. Then remove the engine mounting insulator RH.

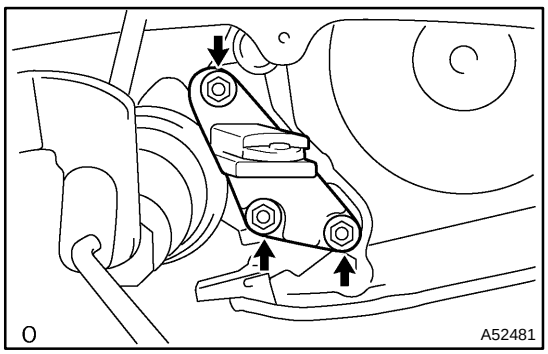

27. REMOVE ENGINE MOUNTING BRACKET RH

(a) Remove the 3 bolts and engine mounting bracket RH.

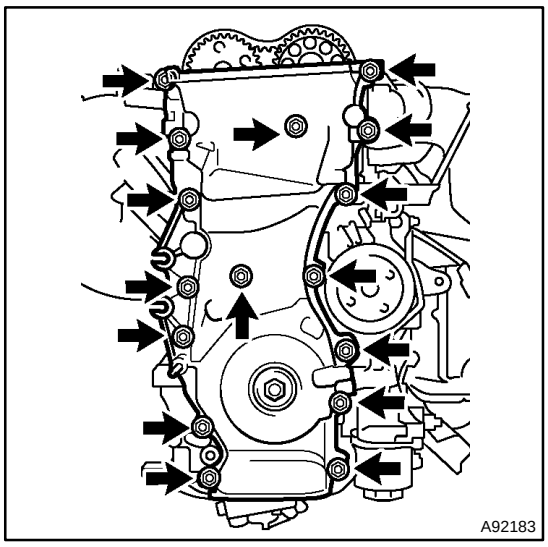

28. REMOVE TIMING CHAIN OR BELT COVER SUB−ASSY

(a) Remove the stud bolt for drive belt tensioner from the cylinder block.

(b) Remove the 14 bolts and 2 nuts.

(c) Pry out the timing chain cover using a screwdriver.

NOTICE:

Be careful not to damage the contact surfaces of the timing chain cover, cylinder block and cylinder head.

29. REMOVE CRANKSHAFT POSITION SENSOR PLATE NO.1

30. REMOVE CHAIN TENSIONER SLIPPER

31. REMOVE CHAIN VIBRATION DAMPER NO.1

32. REMOVE CHAIN SUB−ASSY

33. REMOVE CRANKSHAFT TIMING GEAR OR SPROCKET

(a) Remove the bolt and timing chain guide.

(b) Remove the timing gear or sprocket.

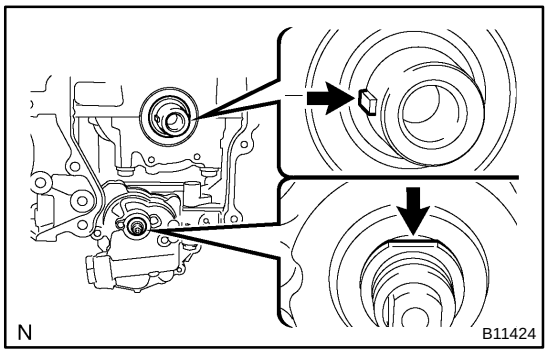

34. REMOVE NO.2 CHAIN SUB−ASSY

(a) Turn the crankshaft counterclockwise 90● and turn the cutout of the oil pump drive shaft gear to the top.

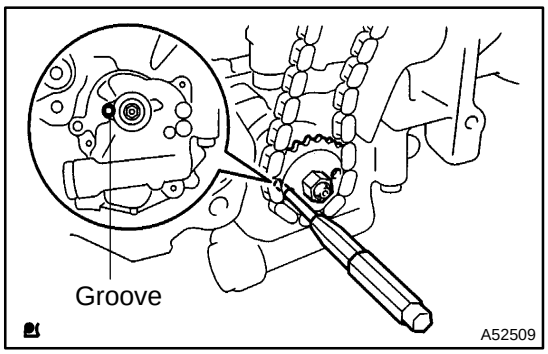

(b) Align the adjusting hole of the oil pump drive shaft gear with the groove of the oil pump.

(c) Put a bar (ϕ 4 mm (0.16 in.)) in the adjusting hole of the oil pump drive shaft gear to temporarily lock the gear in position. Remove the nut.

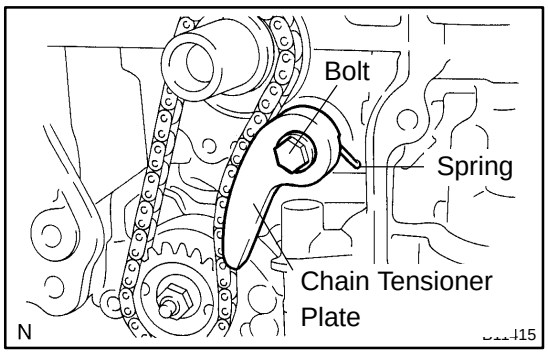

(d) Remove the bolt, chain tensioner plate and spring.
(e) Remove the oil pump drive shaft gear and chain.

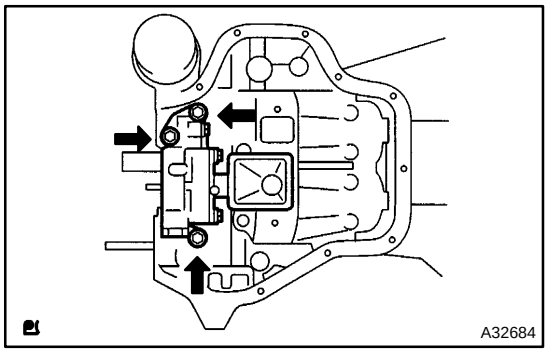

35. REMOVE OIL PUMP ASSY

(a) Remove the 3 bolts and pump.

36. INSTALL OIL PUMP ASSY

(a) Place a new gasket on the cylinder block.
(b) Install the pump with the 3 bolts.
Torque: 19 N·m (194 kgf·cm, 14 ft·lbf)

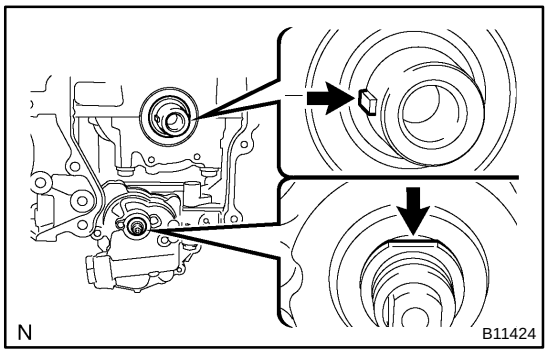

37. INSTALL NO.2 CHAIN SUB−ASSY

(a) Set the crankshaft key into the left horizontal position.
(b) Turn the cutout of the drive shaft gear to the top.

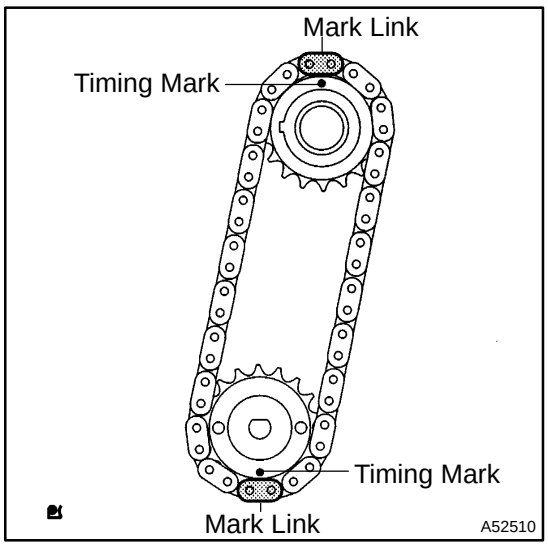

(c) Align the mark links (yellow colored links) with the timing marks of the gear as shown in the illustration.
(d) Insert the gears and chain to the crankshaft and oil pump shaft.
(e) Temporarily tighten the oil pump drive shaft gear with the a nut.

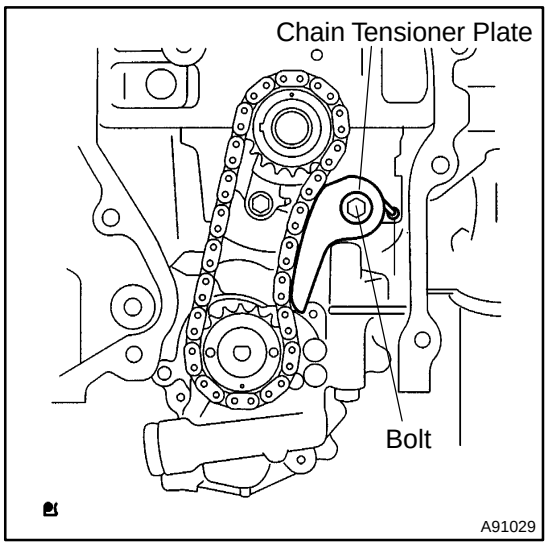

(f) Inset the damper spring into the adjusting hole, and install the chain tensioner plate with the nut.
Torque: 12 N·m (122 kgf·cm, 9 ft·lbf)

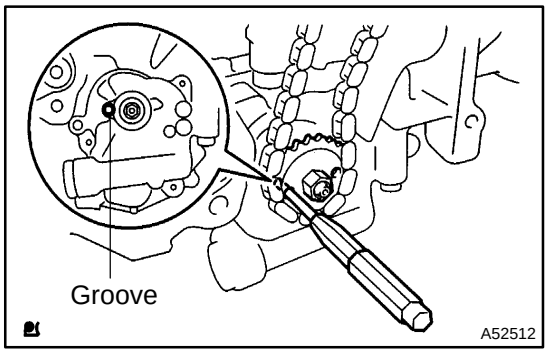

(g) Align the adjusting hole of the oil pump drive shaft gear with the groove of the oil pump.
(h) Put a bar (ϕ 4 mm (0.16 in.)) in the adjusting hole of the oil pump drive shaft gear to temporarily lock the gear in position. Install the nut.
Torque: 30 N·m (306 kgf·cm, 22 ft·lbf)

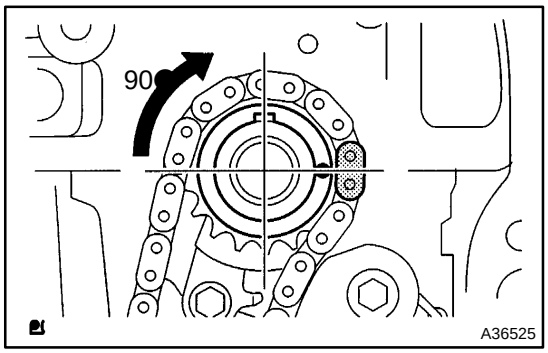

(i) Rotate the crankshaft clockwise 90° and align the crankshaft key to the top.

38. INSTALL CHAIN VIBRATION DAMPER NO.1
Torque: 9.0 N·m (92 kgf·cm, 80 in.·lbf)

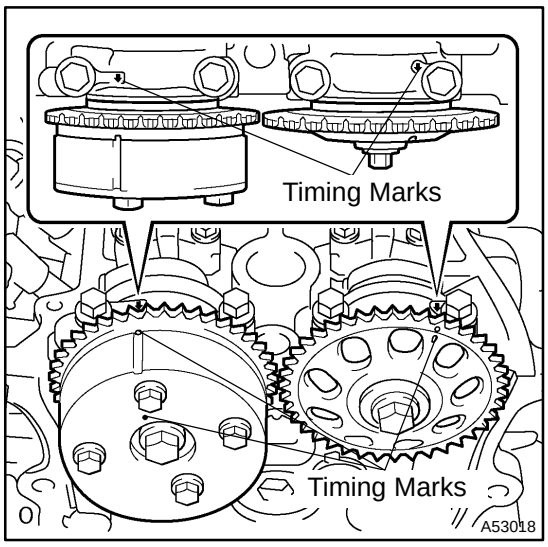

39. INSTALL CHAIN SUB−ASSY

(a) Set the No.1 cylinder to TDC/compression.

(1) Align the timing marks of the camshaft timing sprockets and bearing caps (No. 1 and No. 2).

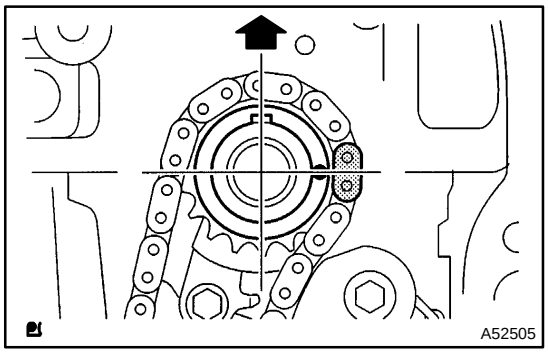

(2) Using the crankshaft pulley bolt, turn the crankshaft and set the set key on the crankshaft upward.

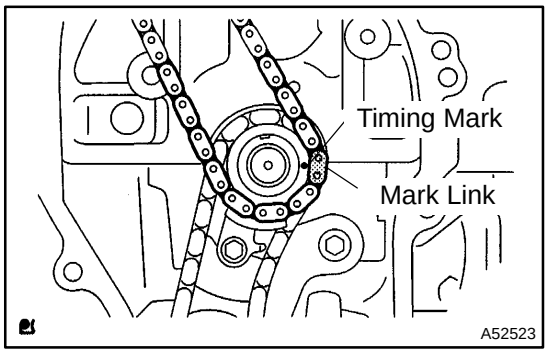

(b) Align the mark link (gold or orange colored link) with the timing mark of the crankshaft timing sprocket.

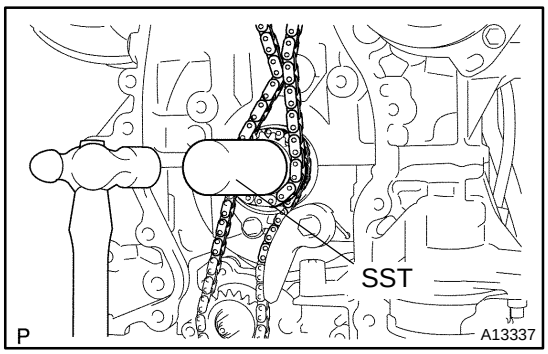

(c) Using SST, tap in the sprocket.
SST 09309−37010

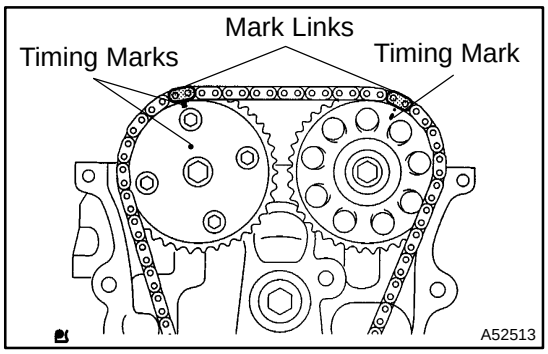

(d) Align the mark links (gold or yellow colored links) with the timing marks of the camshaft timing gear and camshaft timing sprocket, and install the chain.

40. INSTALL CHAIN TENSIONER SLIPPER
Torque: 19 N·m (194 kgf·cm, 14 ft·lbf)

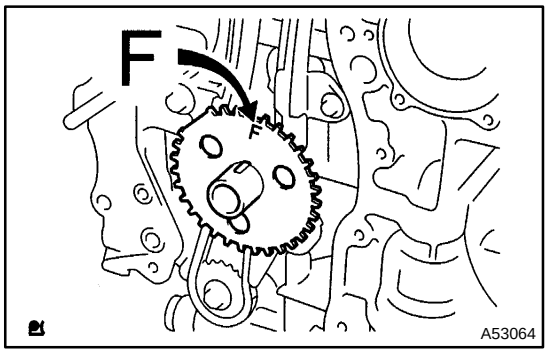

41. INSTALL CRANKSHAFT POSITION SENSOR PLATE NO.1

(a) Install the sensor plate with the F mark facing outward.

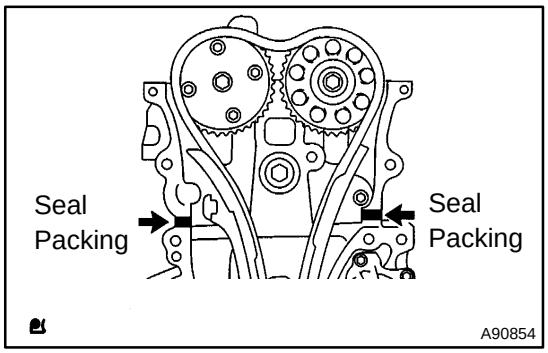

42. INSTALL TIMING CHAIN OR BELT COVER SUB−ASSY

NOTICE:

- **Remove any oil from the contact surface.**
- **Install the chain cover within 3 minutes after applying seal packing.**
- **Do not start the engine for at least 2 hours after installing the chain cover.**

(a) Remove any old packing (FIPG) material and be careful not to drop any oil on the contact surfaces of the timing chain cover, cylinder head and cylinder block.

(b) Apply a continuous bead of seal packing (diameter: 2 mm (0.099 in.)), as shown in the illustration.
Seal packing: Part No. 08826−00080 or equivalent

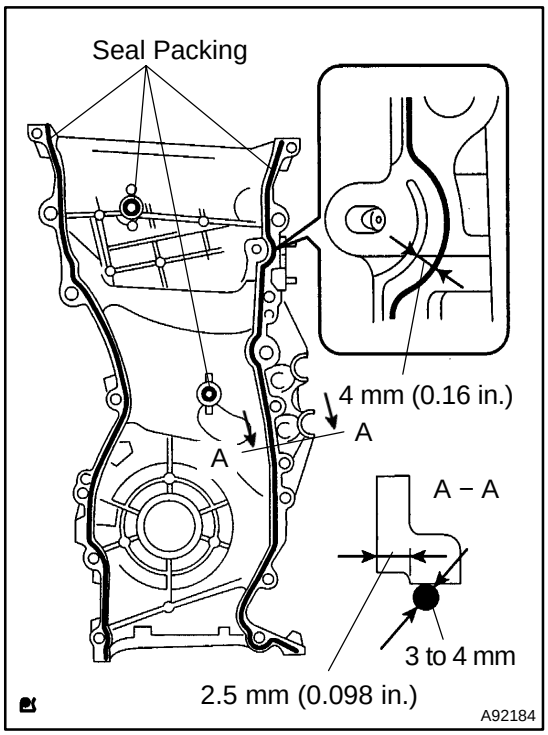

(c) Apply a continuous bead of seal packing (diameter: 3 to 4 mm (0.118 to 0.157 in.)), as shown in the illustration.
Seal packing: Part No. 08826−00080 or equivalent

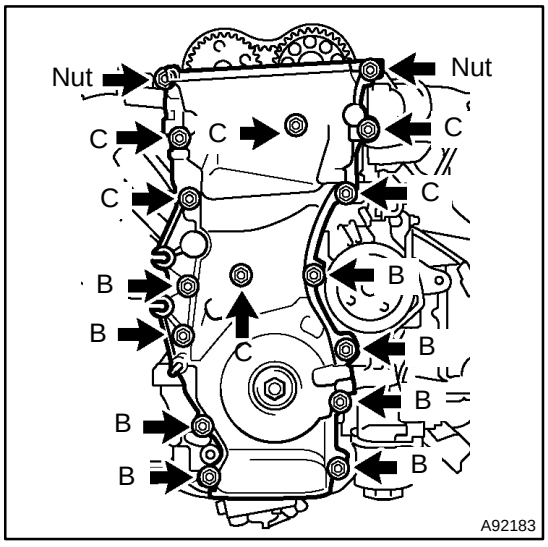

(d) Install the timing chain cover with the 14 bolts and 2 nuts.
Torque:
9.0 N·m (92 kgf·cm, 80 in.·lbf) for bolt A
21 N·m (214 kgf·cm, 15 ft·lbf) for bolt B
43 N·m (438 kgf·cm, 32 ft·lbf) for bolt C
9.0 N·m (92 kgf·cm, 80 in.·lbf) for nut

(e) Install the stud bolt to the drive belt tensioner.
Torque: 10 N·m (102 kgf·cm, 7 ft·lbf)

43. INSTALL CHAIN TENSIONER ASSY NO.1 (See page 14−47)

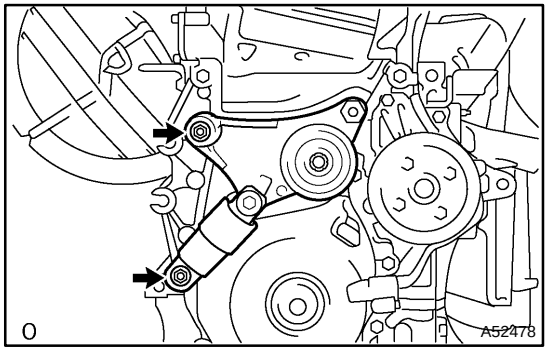

44. INSTALL V−RIBBED BELT TENSIONER ASSY

(a) Install the tensioner with the bolt and nut.
Torque: 59.5 N·m (607 kgf·cm, 44 ft·lbf)

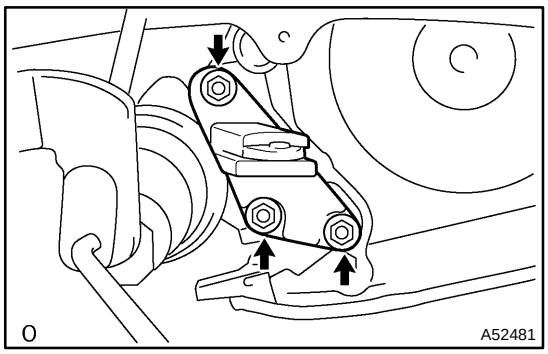

45. INSTALL ENGINE MOUNTING BRACKET RH

(a) Install the engine mounting bracket RH with the 3 bolts.
Torque: 54 N·m (551 kgf·cm, 41 ft·lbf)

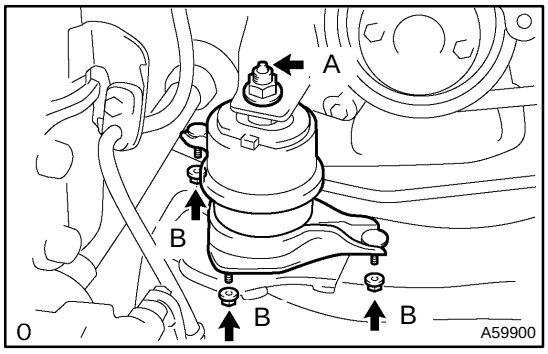

46. INSTALL ENGINE MOUNTING INSULATOR

(a) Raise the engine and install the engine mounting insulator RH.

(b) Install the engine mounting insulator RH with the 4 nuts.
Torque:
95 N·m (969 kgf·cm, 70 ft·lbf) for bolt A
87 N·m (888 kgf·cm, 64 ft·lbf) for bolt B

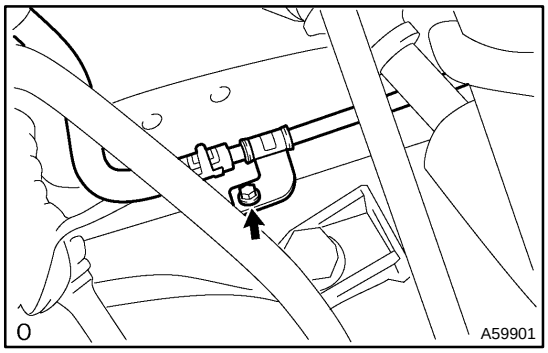

(c) Install the bolt and disconnect the steering gear return hose clamp from the frame.
Torque: 8.0 N·m (80 kgf·cm, 71 in.·lbf)

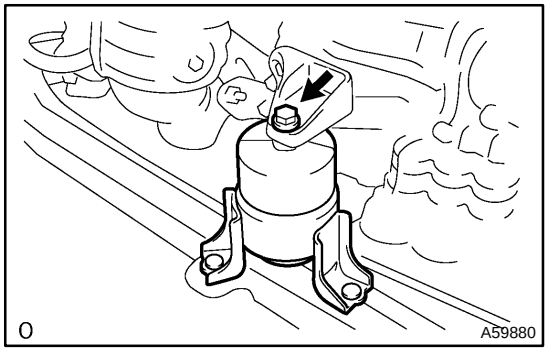

(d) Install the engine mounting insulator FR with the bolt.
Torque: 87 N·m (888 kgf·cm, 64 ft·lbf)

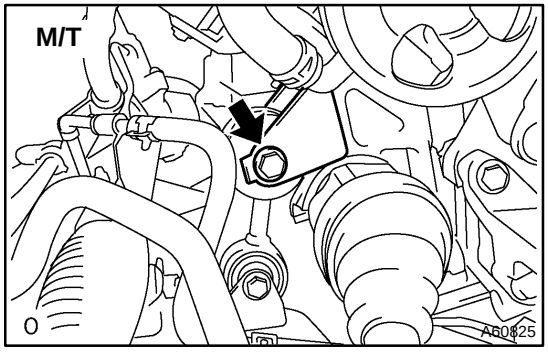

(e) M/T:
Install the engine lateral control rod with the bolt.
Torque: 89 N·m (910 kgf·cm, 66 ft·lbf)

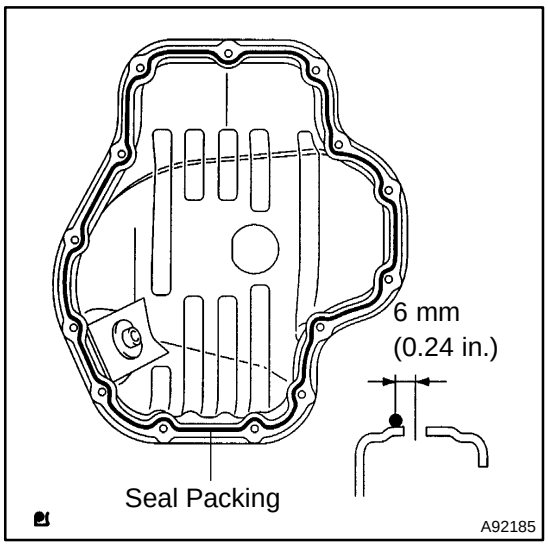

47. INSTALL OIL PAN SUB−ASSY

NOTICE:

- **Remove any oil from the contact surface.**
- **Install the oil pan within 3 minutes after applying seal packing.**
- **Do not start the engine for at least 2 hours after installing.**

(a) Remove any old packing (FIPG) material and be careful not to drop any oil on the contact surface of the cylinder block and oil pan.

(b) Apply a continuous bead of seal packing in the shape of bead (diameter: 3 to 4 mm (0.157 in.)) as shown in the illustration, and install the oil pan.
Seal packing: Part No. 08826−00080 or equivalent

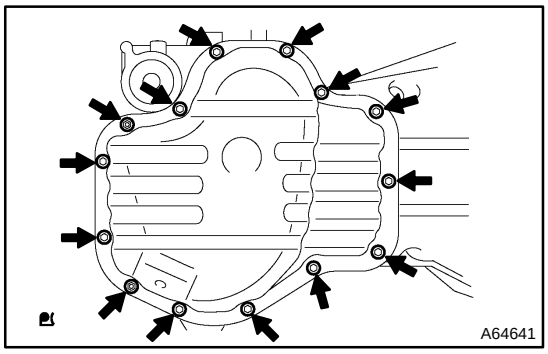

(c) Install the oil pan with the 12 bolts and 2 nuts.
Torque: 9.0 N·m (92 kgf·cm, 80 in.·lbf)

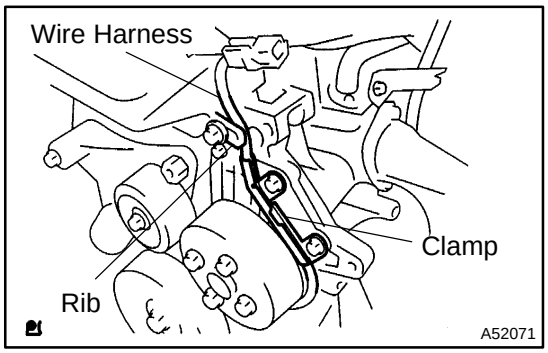

48. INSTALL CRANKSHAFT POSITION SENSOR

(a) Install the bolt and sensor.
Torque: 9.0 N·m (92 kgf·cm, 80 in.·lbf)

(b) Confirm the wire harness of the sensor is placed as shown in the illustration.

49. INSTALL CRANKSHAFT PULLEY

(a) Install the crankshaft pulley (see page 14−47).

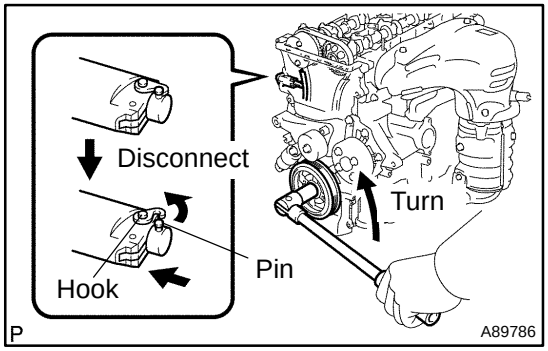

(b) Disconnect the plunger knock pin.

(1) Turn the crankshaft counterclockwise and disconnect the plunger knock pin from the hook.

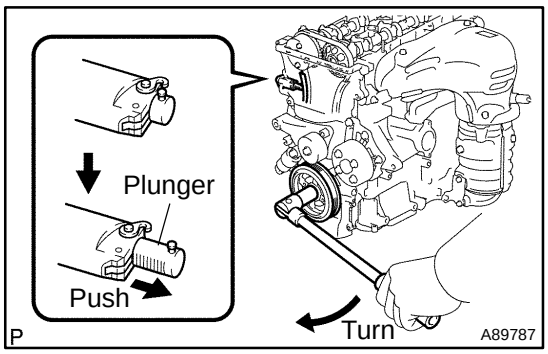

(2) Turn the crankshaft clockwise and check that the slipper is pushed by the plunger.

50. INSTALL CYLINDER HEAD COVER SUB−ASSY (See page 14−47)
51. INSTALL IGNITION COIL ASSY
Torque: 9.0 N·m (92 kgf·cm, 80 in.·lbf)
52. INSTALL VANE PUMP ASSY (See page 51−8)
53. INSTALL GENERATOR ASSY (See page 19−17)
54. INSTALL ENGINE WIRE
55. INSTALL FAN AND GENERATOR V BELT (See page 14−5)
56. INSTALL ENGINE MOUNTING BRACKET NO.2 RH
Torque: 52 N·m (531 kgf·cm, 38 ft·lbf)
57. INSTALL ENGINE MOUNTING STAY NO.2 RH
Torque: 64 N·m (653 kgf·cm, 47 ft·lbf)

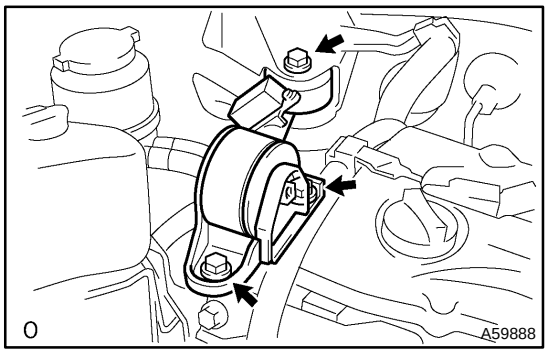

58. INSTALL ENGINE MOVING CONTROL ROD W/BRACKET
(a) Install the engine mounting control rod with the 3 bolts.
Torque: 64 N·m (653 kgf·cm, 47 ft·lbf)

59. INSTALL EXHAUST PIPE ASSY FRONT (See page 15−3)
60. INSTALL FRONT WHEEL RH
61. ADD ENGINE OIL
62. INSPECT CHECK FOR ENGINE OIL LEAKS

OVERHAUL

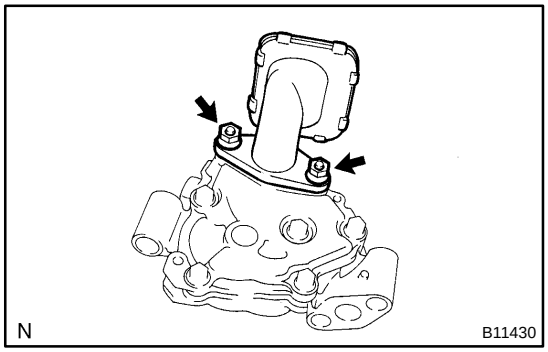

1. REMOVE OIL PUMP STRAINER SET

(a) Remove the 2 nuts and oil pump strainer.

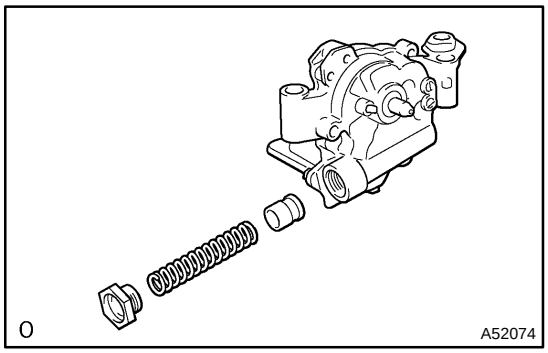

2. REMOVE OIL PUMP RELIEF VALVE

(a) Using a socket wrench (27mm), remove the plug.

(b) Remove the valve spring and relief valve.

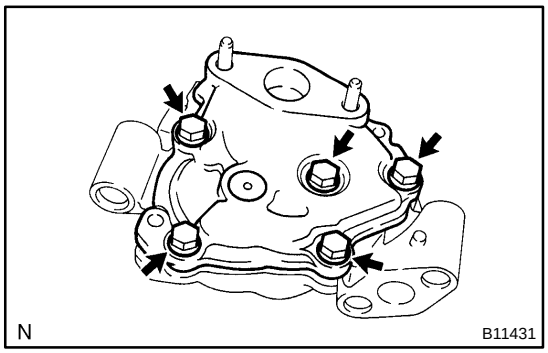

3. REMOVE OIL PUMP COVER

(a) Remove the 5 bolts and oil pump cover.

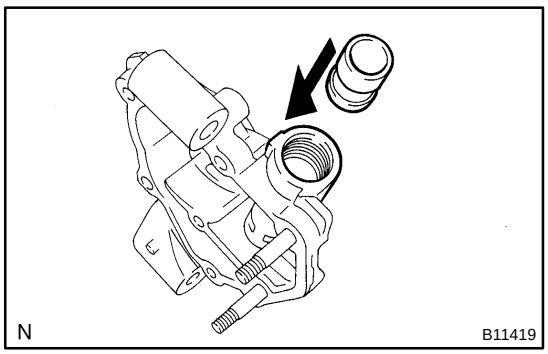

4. INSPECT OIL PUMP RELIEF VALVE

(a) Check the relief valve.

(1) Coat the valve with engine oil and check that the valve falls smoothly into the valve hole by its own weight.

If it does not, replace the relief valve. If necessary, replace the oil pump assy.

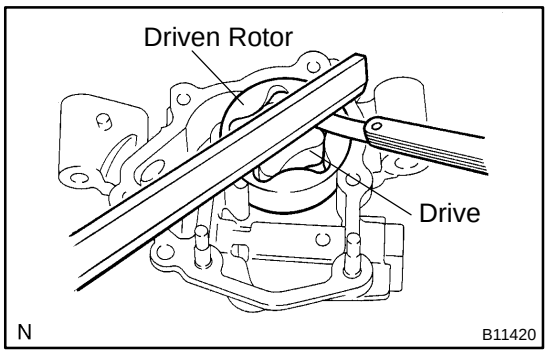

5. INSPECT OIL PUMP ROTOR

(a) Check the clearance between the drive and driven rotor.
  (1) Place a precision straight edge on the top surface of the drive. Insert a feeler gauge between the bottom edge of the precision straight edge and the top surface of the driven rotor. Measure the clearance.

  Specified clearance:
  0.030 to 0.160 mm (0.0012 to 0.0063 in.)

If the clearance is greater than the maximum, replace the oil pump assy.

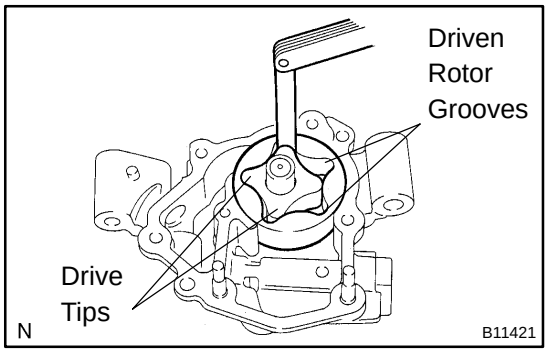

(b) Check the clearance between the drive tips and driven rotor grooves.
  (1) Insert a feeler gauge between each drive tip and driven rotor groove. Measure the clearance.

  Specified tip clearance:
  0.080 to 0.350 mm (0.0031 to 0.0138 in.)

If the tip clearance is greater than the maximum, replace the oil pump assy.

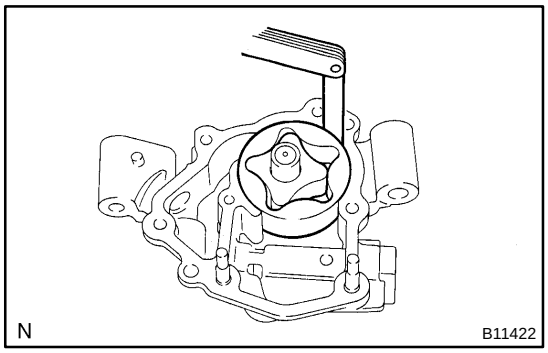

(c) Check the clearance between the driven rotor and body.
  (1) Insert a feeler gauge between the driven rotor and body. Measure the clearance.

  Specified body clearance:
  0.100 to 0.325 mm (0.0039 to 0.0128 in.)

(d) Remove the oil pump rotors.

If the body clearance is greater than the maximum, replace the oil pump assy.

6. REMOVE OIL PUMP ROTOR

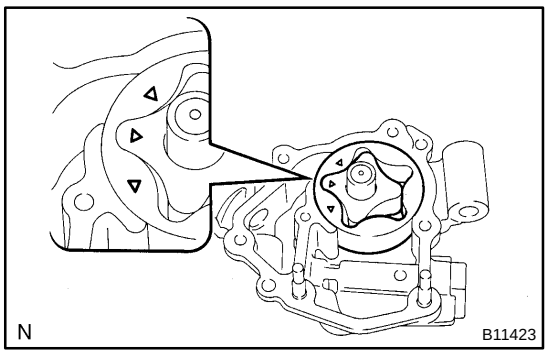

7. INSTALL OIL PUMP ROTOR

(a) Coat the drive rotor and driven rotors with engine oil.

(b) Place the drive and driven rotors into the pump body with the marks facing the pump body cover side.

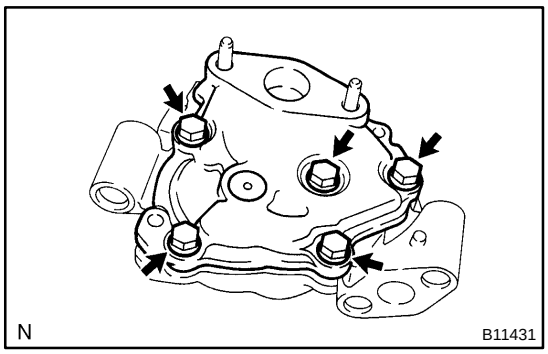

8. INSTALL OIL PUMP COVER

(a) Install the pump body cover with the 5 bolts.
Torque: 8.8 N·m (90 kgf·cm, 79 in.·lbf)

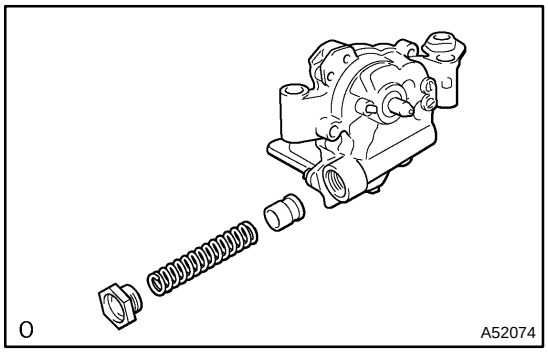

9. INSTALL OIL PUMP RELIEF VALVE

(a) Coat the relief valve with engine oil.
(b) Insert the relief valve and spring into the pump body hole.
(c) Using a socket wrench (27 mm), install the plug.

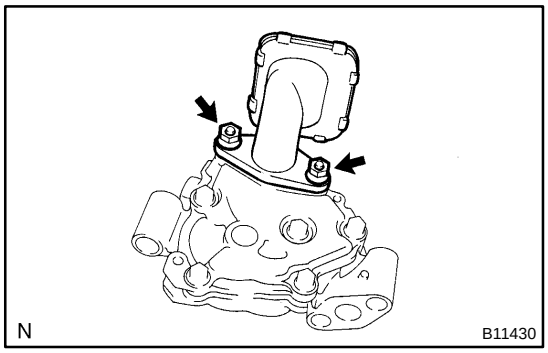

10. INSTALL OIL PUMP STRAINER SET

(a) Place a new gasket on the oil pump.
(b) Install the oil strainer with the 2 nuts.
Torque: 8.8 N·m (90 kgf·cm, 79 in.·lbf)

LUBRICATION SYSTEM (1MZ−FE/3MZ−FE)

17020−10

ON−VEHICLE INSPECTION

1. CHECK ENGINE OIL LEVEL

(a) Warm up the engine, stop the engine and wait 5 minutes. The oil level should be between the dipstick's low level mark and full level mark.

If the oil level is low, check for leakage and add oil up to the full level mark.

NOTICE:

Do not fill with engine oil above the full level mark.

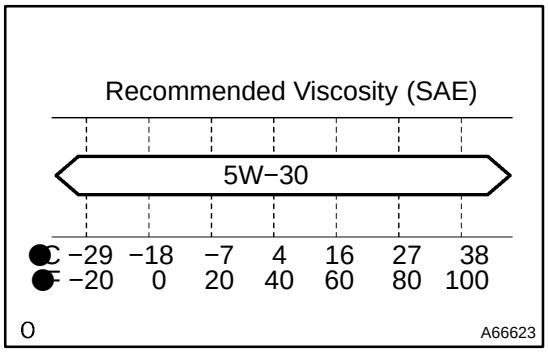

2. CHECK ENGINE OIL QUALITY

(a) Check the oil for deterioration, entry of water, discoloring or thinning.

If the quality is visibly poor, replace the oil.

Oil grade:

API grade SL, Energy−Conserving or ILSAC, multi-grade engine oil is recommended. SAE 5W−30 is the best choice for your vehicle, for good fuel economy, and good starting in cold weather.

3. REMOVE OIL PRESSURE SWITCH ASSY

(a) Disconnect the oil pressure switch connector.

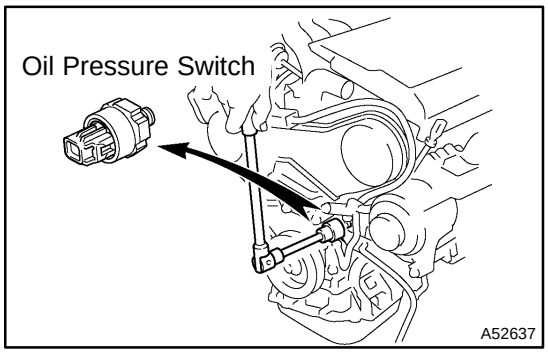

(b) Using a 24 mm deep socket wrench, remove the oil pressure switch.

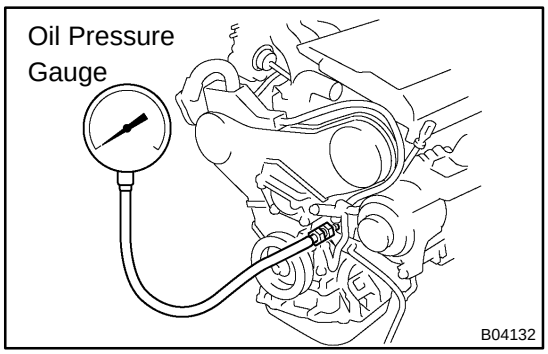

4. INSTALL OIL PRESSURE GAUGE

(a) Install the oil pressure gauge.

5. WARM UP ENGINE

6. CHECK OIL PRESSURE

Specification:

Item	Oil Pressure
Idle	29 kPa (0.3 kgf·cm^2, 4.3 psi) or more
3,000 rpm	245 to 539 kPa (2.5 to 5.5 kgf·cm^2, 36 to 78 psi) or more

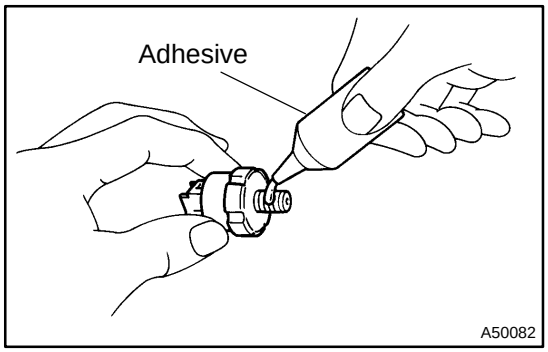

7. INSTALL OIL PRESSURE SWITCH

(a) Remove the oil pressure gauge.

(b) Apply adhesive to 2 or 3 threads of the oil pressure switch.

Adhesive:

Part No. 08833−00080, THREE BOND 1344, LOCTITE 242 or equivalent

(c) Using a 24 mm deep socket wrench, install the oil pressure switch.

Torque: 15 N·m (152 kgf·cm, 11 ft·lbf)

NOTICE:

Do not start the engine for at least 1 hour after installation of the switch.

(d) Connect the oil pressure switch connector.

8. START ENGINE AND CHECK FOR ENGINE OIL LEAKS

OIL FILTER SUB−ASSY (1MZ−FE/3MZ−FE)

1701H−08

REPLACEMENT

1. REMOVE ENGINE UNDER COVER RH

CAUTION:

- **Prolonged and repeated contact of mineral oil with the skin will deplete the skin's natural fats, leading to dryness, irritation and dermatitis. In addition, used engine oil contains harmful contaminants which may cause skin cancer.**
- **Wear protective clothing and gloves to minimize the length and frequency of contact between the skin and used oil. If contact does occur wash your skin thoroughly with soap and water or waterless hand cleaner. Do not use gasoline, thinners or solvents to wash the skin.**
- **In order to preserve the environment, dispose of used oil and used oil filters only at designated disposal site.**

2. DRAIN ENGINE OIL

(a) Remove the oil filler cap.

(b) Remove the oil drain plug, and drain the oil into a container.

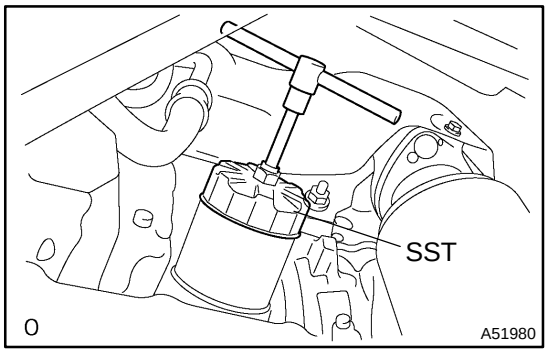

3. REMOVE OIL FILTER SUB−ASSY

(a) Using SST, remove the oil filter.
SST 09228−07501

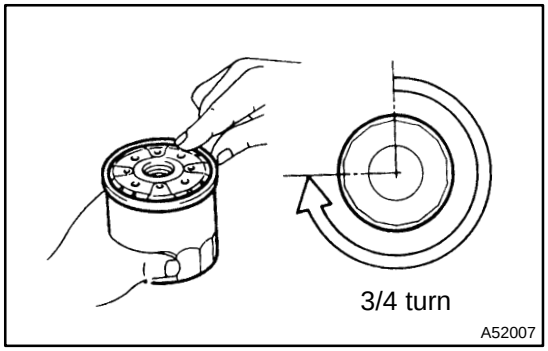

4. INSTALL OIL FILTER SUB−ASSY

(a) Check and clean the oil filter installation surface.

(b) Apply clean engine oil to the gasket of a new oil filter.

(c) Lightly screw the oil filter into place, and tighten it until the gasket contacts the seat.

(d) Using SST, tighten the oil filter an additional 3/4 turn.
SST 09228−07501

5. ADD ENGINE OIL

(a) Clean and install the oil drain plug with a new gasket.
Torque: 45 N·m (459 kgf·cm, 33 ft·lbf)

(b) Fill with fresh engine oil.
Specification:

Item		Capacity
Drain and refill	w/ oil filter change	4.7 liters (5.0 US qts, 4.1 lmp. qts)
Drain and refill	w/o oil filter change	4.5 liters (4.8 US qts, 4.0 lmp. qts)
Dry fill		5.5 liters (5.8 US qts, 4.8 lmp. qts)

(c) Install the oil filler cap.

6. INSPECT CHECK FOR ENGINE OIL LEAKS

7. INSTALL ENGINE UNDER COVER RH

OIL PUMP ASSY (1MZ−FE/3MZ−FE)

170HG−02

COMPONENTS

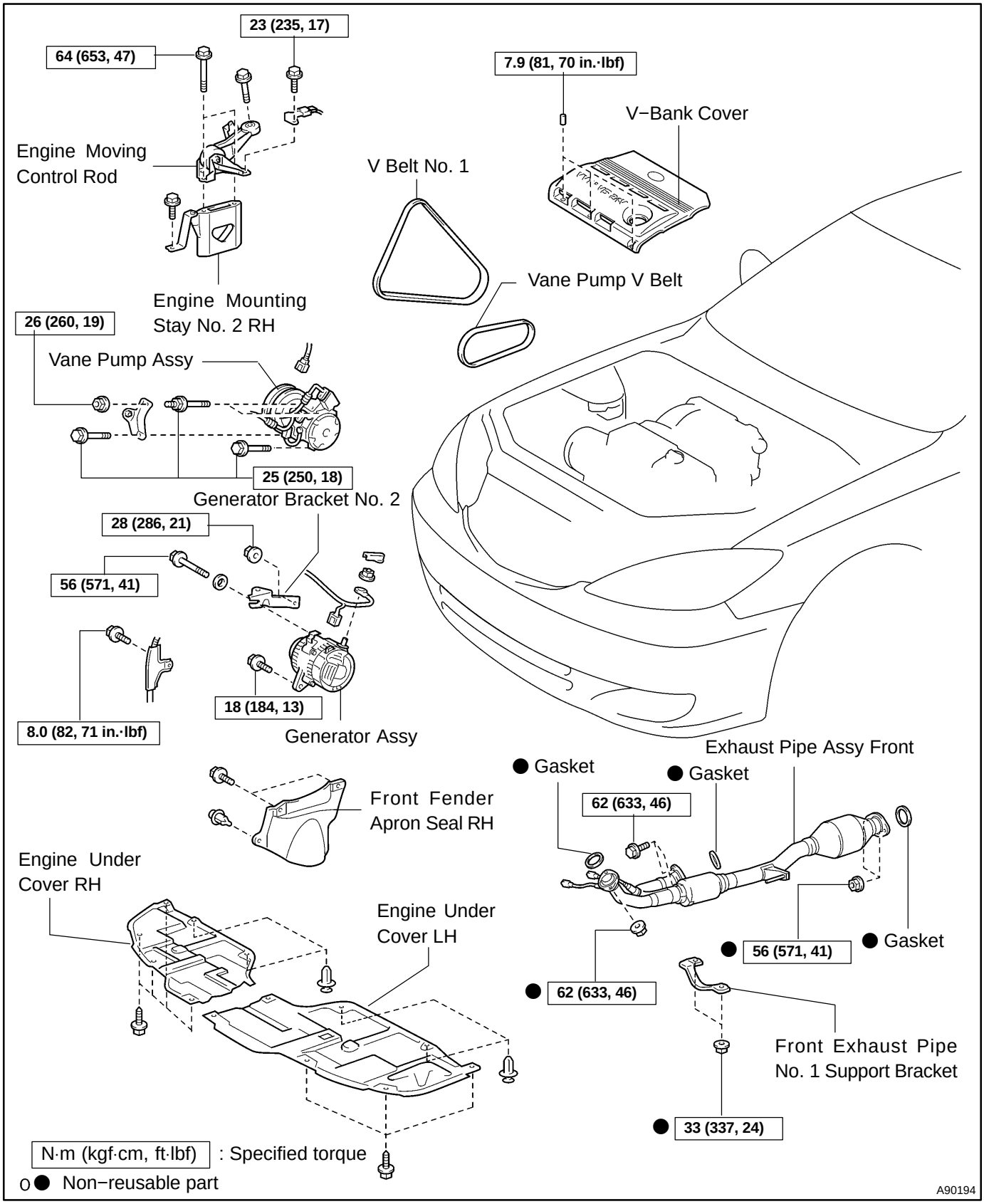

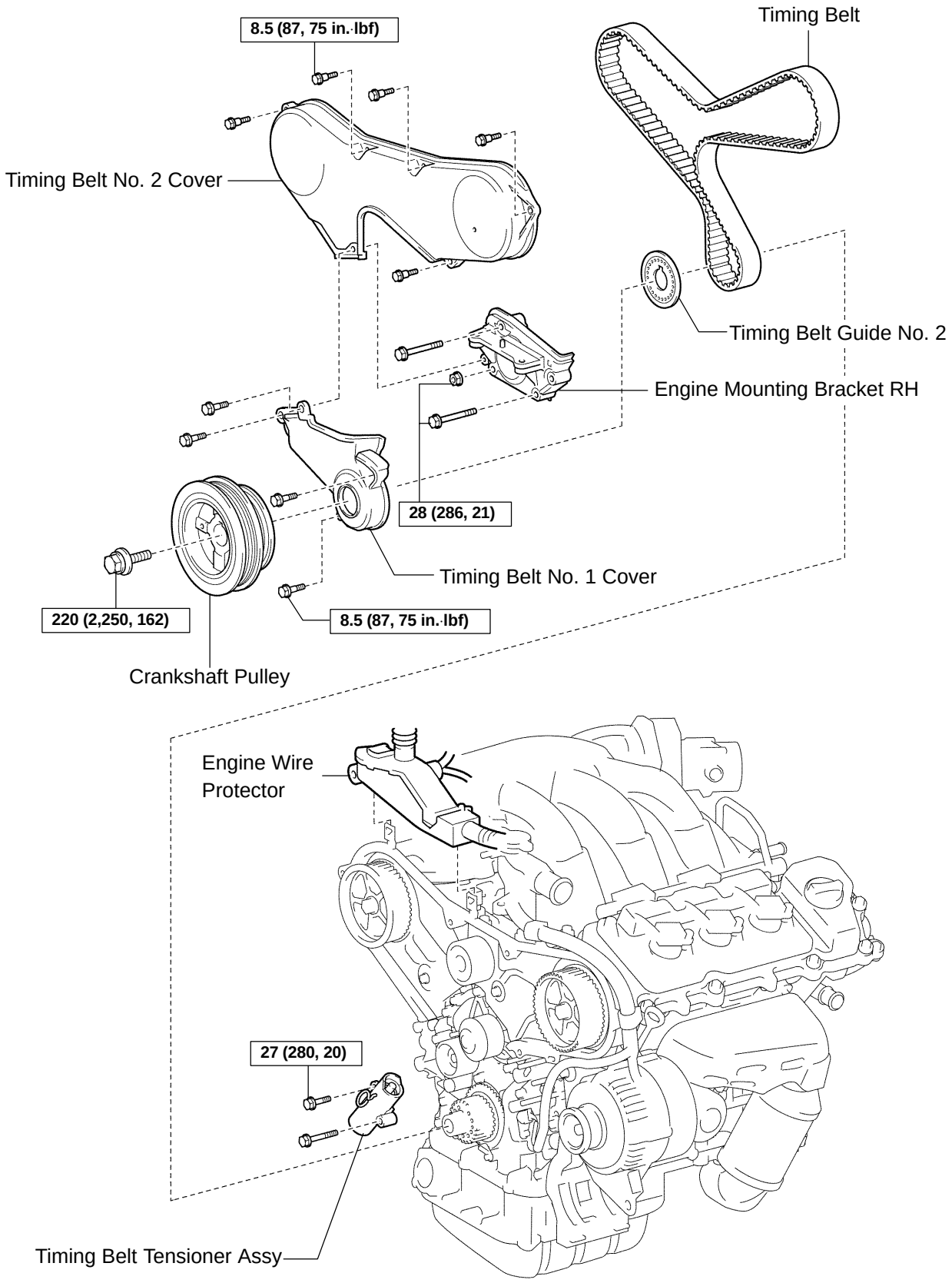

N·m (kgf·cm, ft·lbf): Specified torque

P

A78353

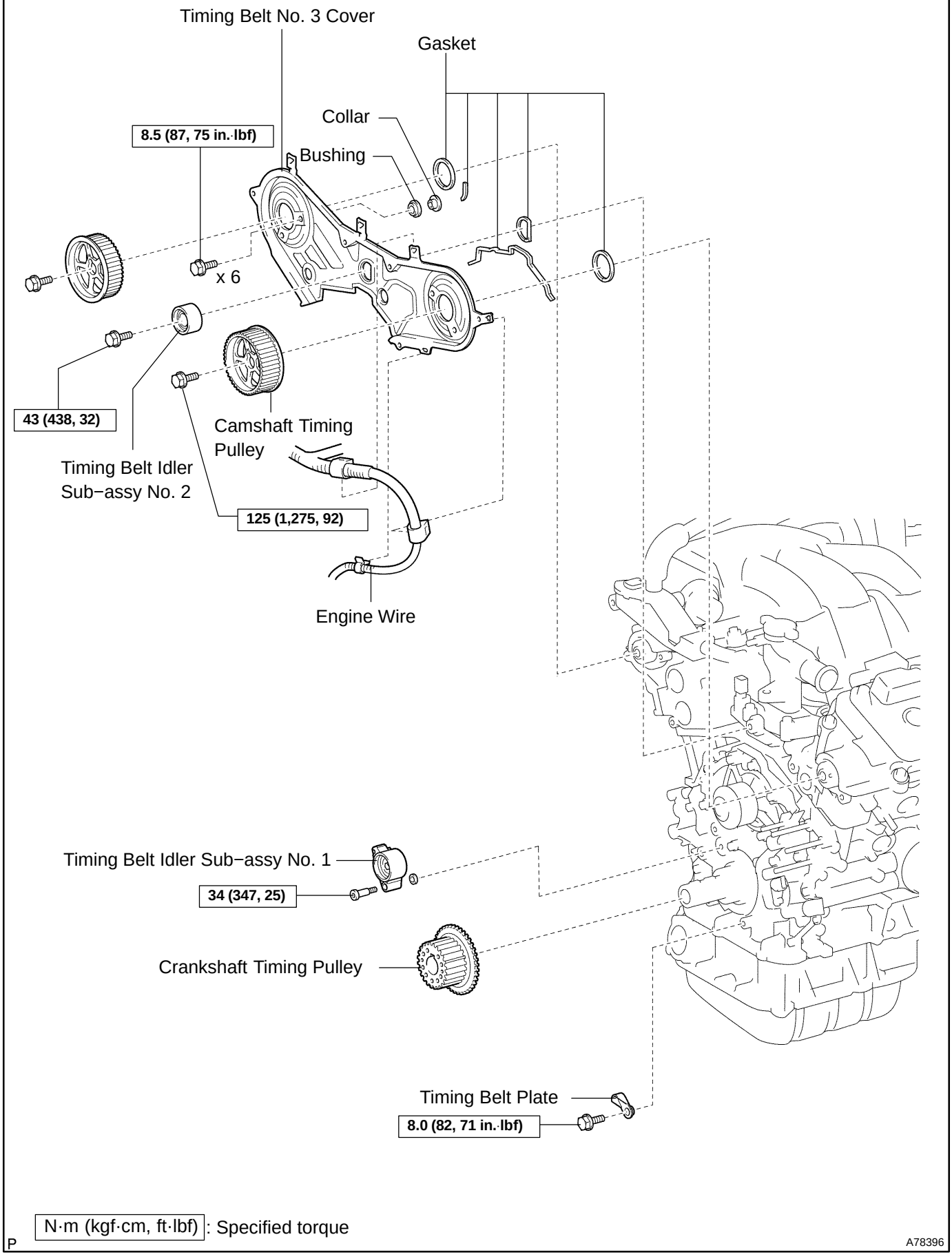
Timing Belt No. 3 Cover
Gasket
Collar
8.5 (87, 75 in.·lbf)
Bushing
x 6
43 (438, 32)
Camshaft Timing Pulley
Timing Belt Idler Sub−assy No. 2
125 (1,275, 92)
Engine Wire
Timing Belt Idler Sub−assy No. 1
34 (347, 25)
Crankshaft Timing Pulley
Timing Belt Plate
8.0 (82, 71 in.·lbf)
N·m (kgf·cm, ft·lbf): Specified torque
P
A78396

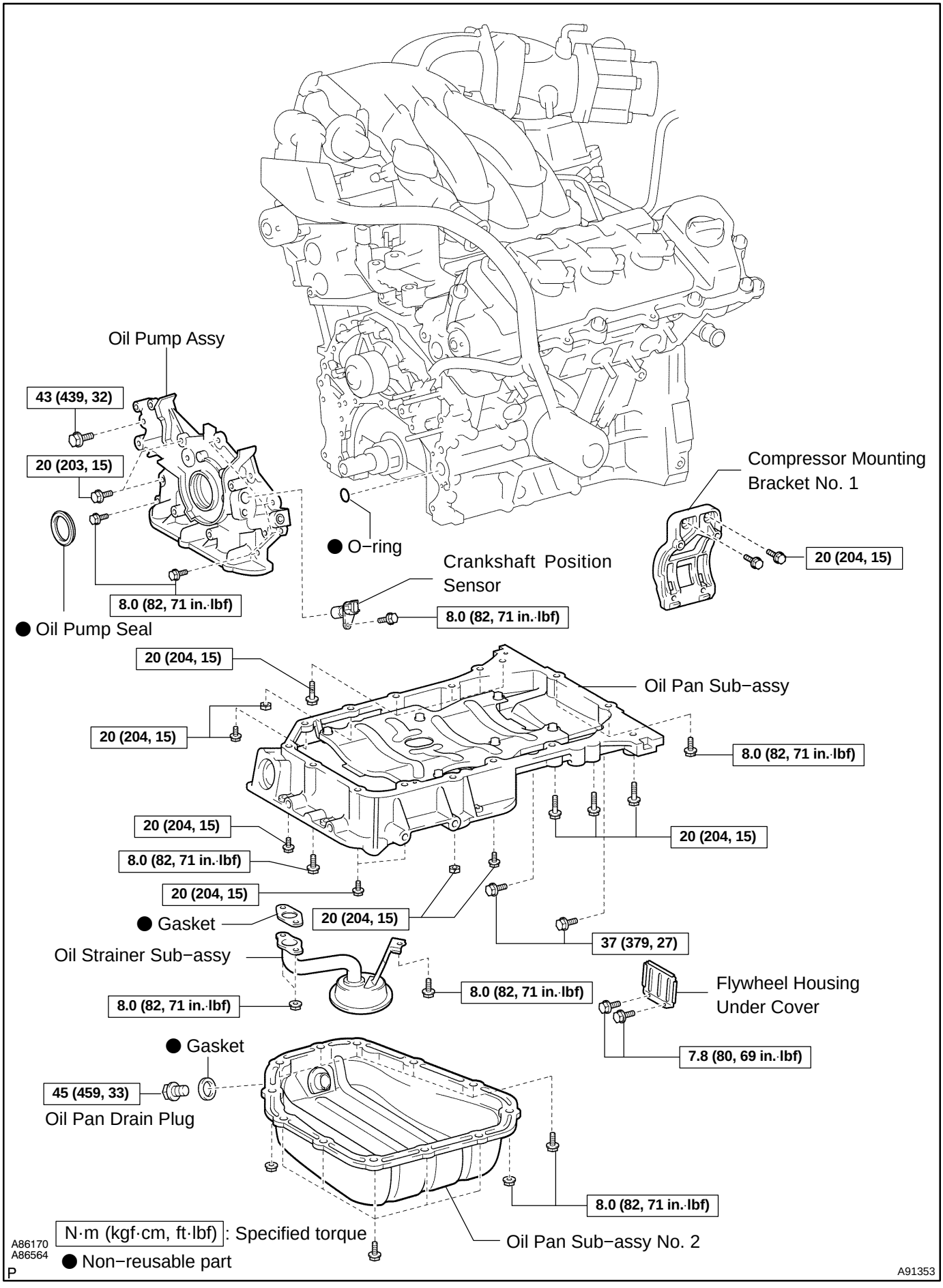
Oil Pump Assy
43 (439, 32)
20 (203, 15)
8.0 (82, 71 in.·lbf)
● Oil Pump Seal
● O−ring
Crankshaft Position Sensor
8.0 (82, 71 in.·lbf)
Compressor Mounting Bracket No. 1
20 (204, 15)
20 (204, 15)
Oil Pan Sub−assy
20 (204, 15)
8.0 (82, 71 in.·lbf)
20 (204, 15)
20 (204, 15)
8.0 (82, 71 in.·lbf)
20 (204, 15)
● Gasket
20 (204, 15)
37 (379, 27)
Oil Strainer Sub−assy
8.0 (82, 71 in.·lbf)
8.0 (82, 71 in.·lbf)
Flywheel Housing Under Cover
7.8 (80, 69 in.·lbf)
● Gasket
45 (459, 33)
Oil Pan Drain Plug
8.0 (82, 71 in.·lbf)
Oil Pan Sub−assy No. 2
N·m (kgf·cm, ft·lbf): Specified torque
● Non−reusable part
A86170
A86564
P
A91353

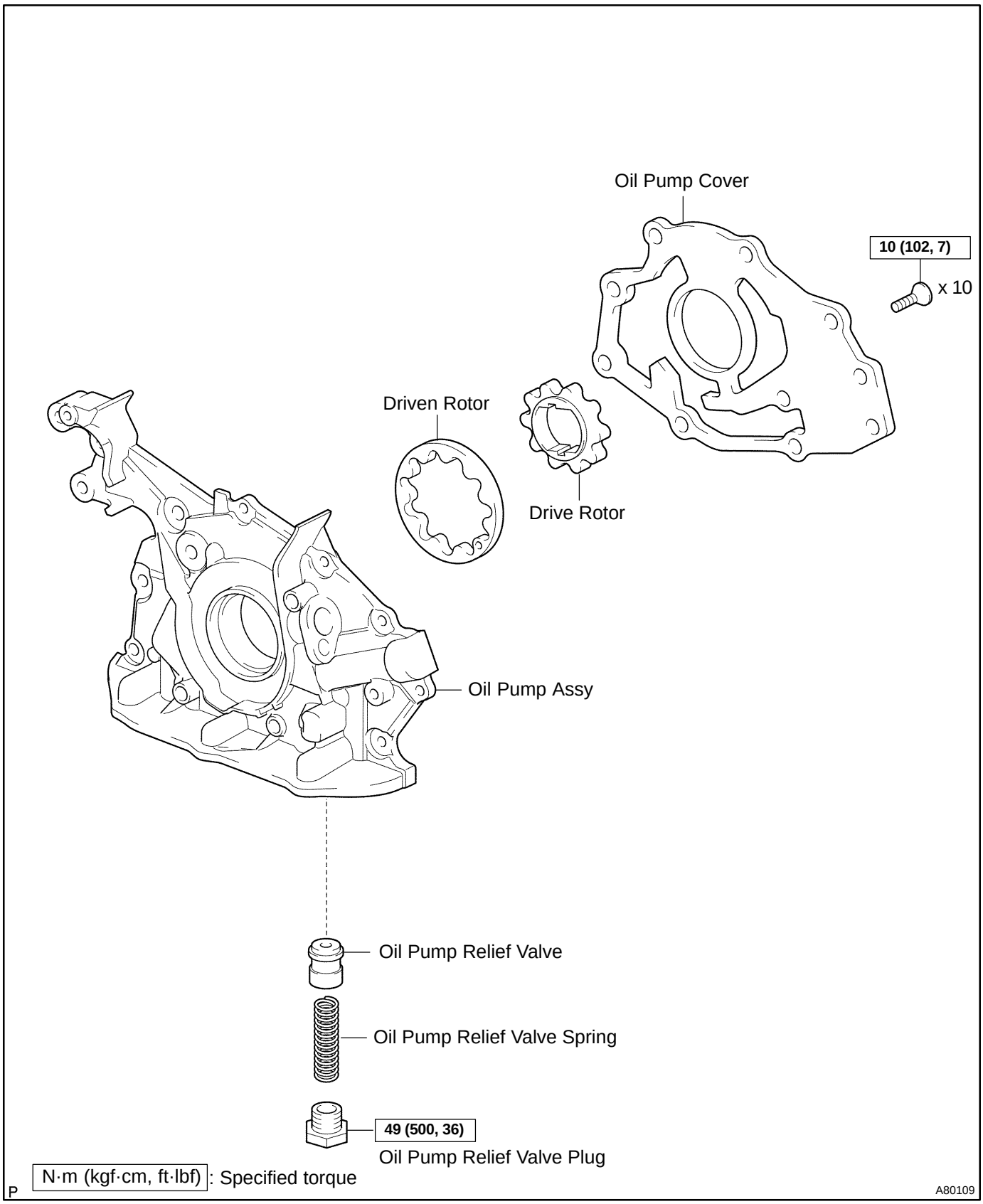
Oil Pump Cover
10 (102, 7)
x 10
Driven Rotor
Drive Rotor
Oil Pump Assy
Oil Pump Relief Valve
Oil Pump Relief Valve Spring
49 (500, 36)
Oil Pump Relief Valve Plug
N·m (kgf·cm, ft·lbf): Specified torque
P
A80109

170HH−02

REPLACEMENT

1. **REMOVE FRONT WHEEL RH**
2. **REMOVE FRONT FENDER APRON SEAL RH**
3. **REMOVE ENGINE UNDER COVER RH**
4. **DRAIN ENGINE OIL**

(a) Install a new gasket after draining engine oil.
Torque: 45 N·m (459 kgf·cm, 33 ft·lbf)

5. **REMOVE FRONT SUSPENSION UPPER BRACE CENTER (W/ FRONT SUSPENSION BRACE UPPER CENTER)**
6. **REMOVE V BELT NO. 1 (See page 14−140)**
7. **REMOVE VANE PUMP V BELT (See page 14−140)**
8. **REMOVE ENGINE MOVING CONTROL ROD (See page 14−164)**
9. **REMOVE ENGINE MOUNTING STAY NO.2 RH (See page 14−164)**
10. **REMOVE GENERATOR BRACKET NO.2**
11. **REMOVE CRANKSHAFT PULLEY (See page 14−186)**
12. **REMOVE TIMING BELT NO.1 COVER (See page 14−186)**
13. **REMOVE TIMING BELT NO.2 COVER (See page 14−186)**
14. **REMOVE TIMING BELT GUIDE NO.2**
15. **REMOVE TIMING BELT (See page 14−186)**
16. **REMOVE EXHAUST PIPE NO.1 SUPPORT BRACKET**
17. **REMOVE EXHAUST PIPE ASSY FRONT**
18. **REMOVE EXHAUST PIPE SUPPORT BRACKET NO.1**

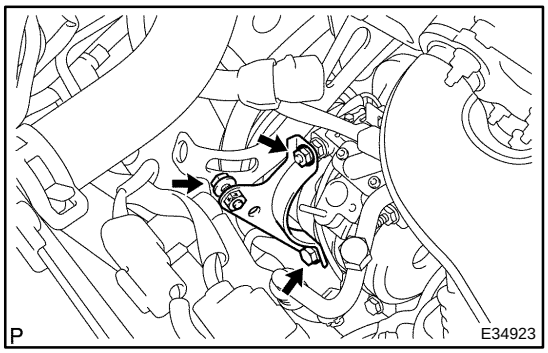

19. **SEPARATE COMPRESSOR AND MAGNETIC CLUTCH**

(a) Remove the 2 bolts, nut and the drive belt adjusting bar bracket.

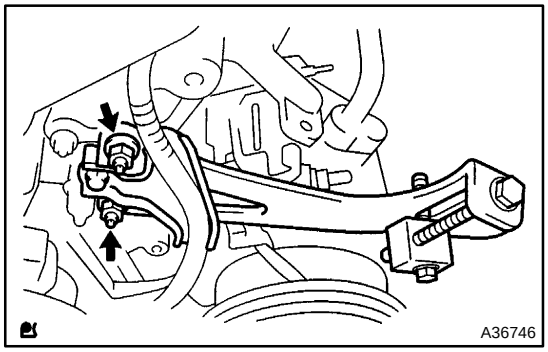

(b) Remove the 2 nuts, the generator bracket adjusting bar with wire harness clamp bracket.

(c) Disconnect the compressor, magnetic clutch connector and the wire harness clamp.

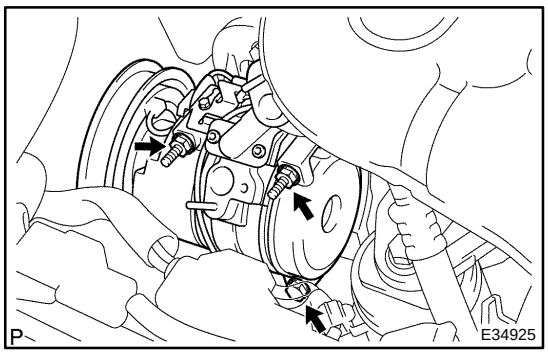

(d) Remove the 3 bolts, the compressor and magnetic clutch.

HINT:

Hang up the hoses instead of detaching.

20. REMOVE TIMING BELT IDLER SUB−ASSY NO.2 (See page 14−186)

21. REMOVE CAMSHAFT TIMING PULLEY (See page 14−186)

22. REMOVE TIMING BELT IDLER SUB−ASSY NO.1

(a) Using a 10 mm socket hexagon wrench, remove the timing belt idler and plate washer.

23. REMOVE CRANKSHAFT TIMING PULLEY (See page 14−186)

24. REMOVE TIMING BELT NO.3 COVER (See page 14−186)

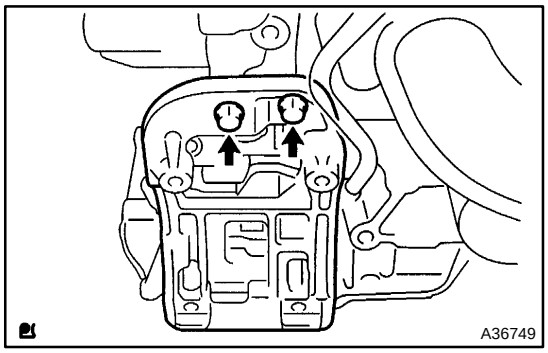

25. REMOVE COMPRESSOR MOUNTING BRACKET NO.1

(a) Remove the 2 bolts and mounting bracket.

26. REMOVE OIL LEVEL GAGE GUIDE

(a) Remove the bolt and gage guide.

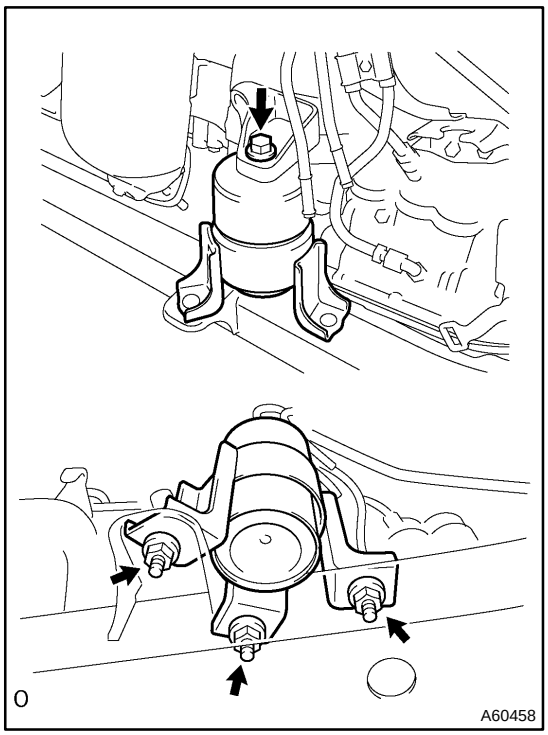

27. SEPARATE ENGINE MOUNTING INSULATOR FR

(a) Remove the 3 nuts and bolt. Then separate the engine mounting insulator.

NOTICE:

Do not remove the engine mounting insulator.

28. REMOVE ENGINE MOUNTING INSULATOR RH

(a) Remove the bolt and disconnect the power steering return hose clamp from the frame.

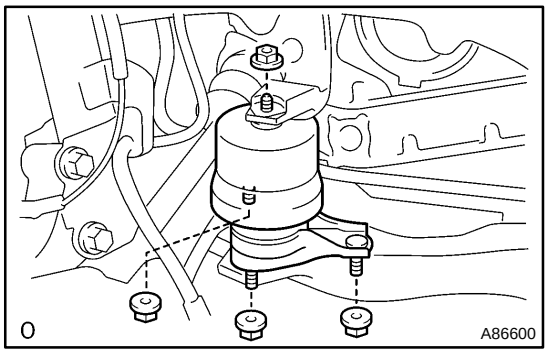

(b) Remove the 4 nuts.

(c) Prepare a jack. Place a wooden block on the jack and set the jack under the engine. Remove the engine mounting insulator.

(d) Raise the jack and lift up the engine. Then remove the engine mounting insulator RH.

NOTICE:

Be careful not to damage the contact surfaces of the oil pan.

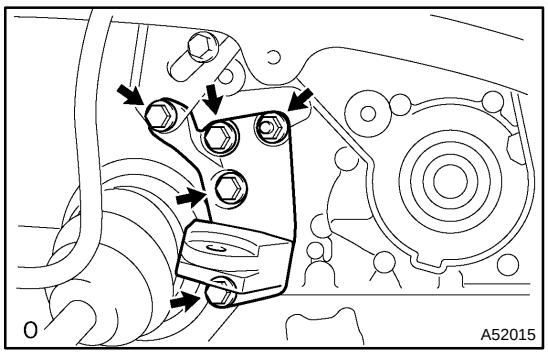

29. REMOVE ENGINE MOUNTING BRACKET RH

(a) Remove the 4 bolts, nut and bracket.

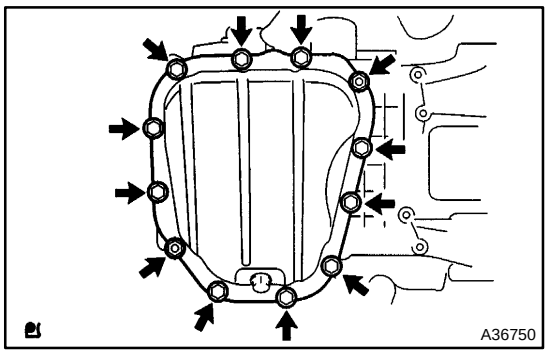

30. REMOVE OIL PAN SUB−ASSY NO.2

(a) Remove the 10 bolts, 2 nuts and oil pan.

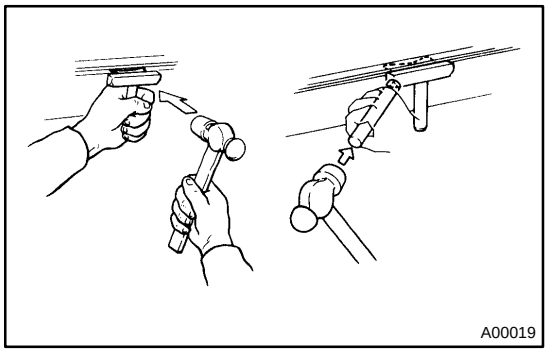

(b) Insert the blade of SST between the oil pan No. 1 and oil pan No. 2, cut through the sealer and remove oil pan No. 2.

SST 09032−00100

NOTICE:

- **Do not damage the contact surface of oil pan No. 1 and oil pan No. 2.**
- **Do not damage the flange portion of oil pan No.2 during removal.**

31. REMOVE OIL STRAINER SUB−ASSY

(a) Remove the bolt and 2 nuts, and remove the oil strainer and gasket.

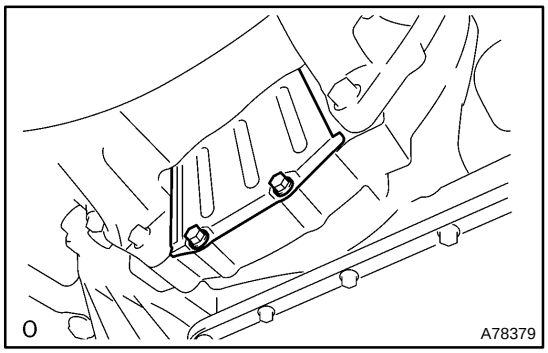

32. REMOVE OIL PAN SUB−ASSY

(a) Remove the 2 bolts and the flywheel housing under cover.

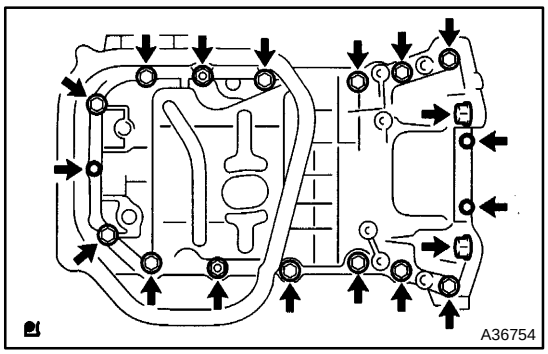

(b) Uniformly loosen the 17 bolts and 2 nuts. Remove the bolts and nuts.

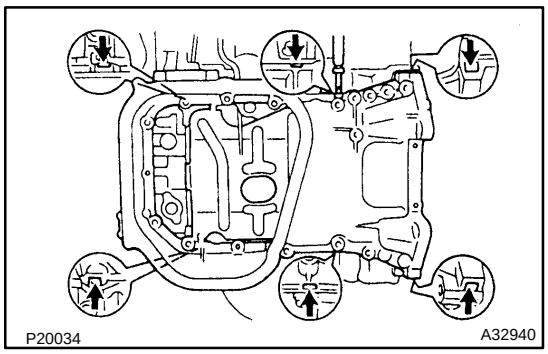

(c) Using a screwdriver, remove the oil pan by prying the portions between the cylinder block and oil pan shown in the illustration.

NOTICE:

Be careful not to damage the contact surfaces of the cylinder block and oil pan.

33. REMOVE CRANKSHAFT POSITION SENSOR

(a) Disconnect the sensor connector.

(b) Remove the bolt and sensor.

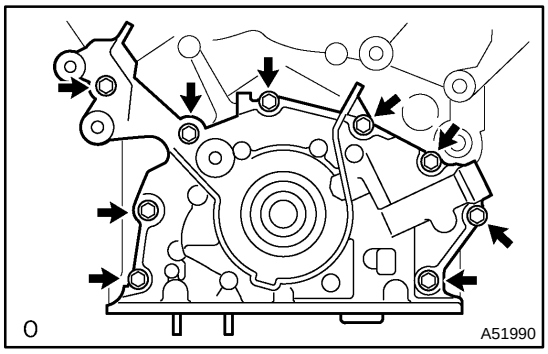

34. REMOVE OIL PUMP ASSY

(a) Remove the 9 bolts.

(b) Using a screwdriver, remove the oil pump by prying between the oil pump and the main bearing cap.

(c) Remove the O−ring.

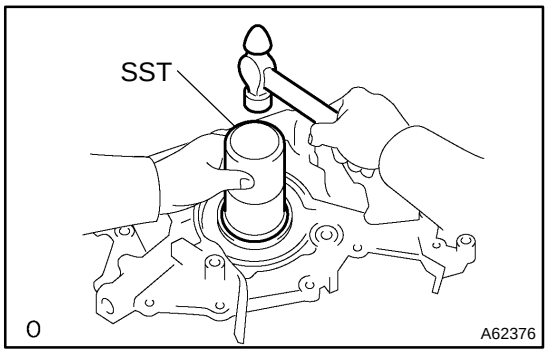

35. INSTALL OIL PUMP ASSY

(a) Using SST and a hammer, install a new oil seal. Tap the surface of the SST with the hammer until the oil seal's surface is flush with oil pump body edge.

SST 09223−00010

NOTICE:

- **Be careful not to tap the oil seal at an angle.**
- **Keep the gap between the oil pump body edge and the oil seal free from contamination.**

(b) Apply a small amount of MP grease to the oil seal lip.

(c) Remove any old seal packing material from the contact surface.

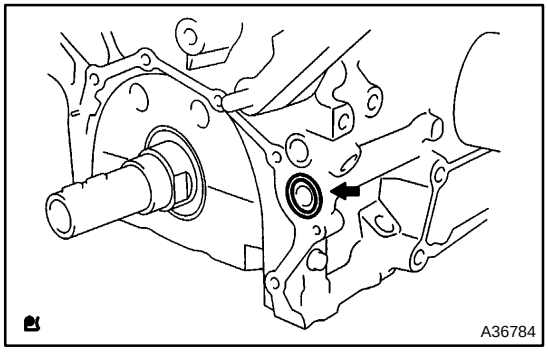

(d) Apply a light coat of engine oil to a new O−ring and place it on the cylinder block.

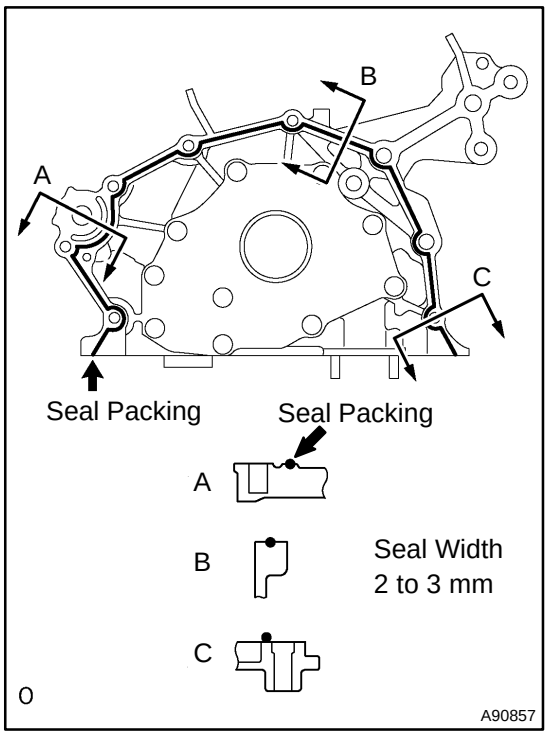

(e) Apply a continuous bead of seal packing (diameter 2 to 3 mm (0.08 to 0.12 in.)) as shown in the illustration.
Seal packing: Part No. 08226−00080 or equivalent

NOTICE:

- **Remove any oil from contact surface.**
- **Apply seal packing to the inner side of the bolt holes.**
- **Install the oil pump within 3 minutes after applying seal packing.**
- **Do not expose the seal to engine oil for at least 2 hours after installing the oil pump.**

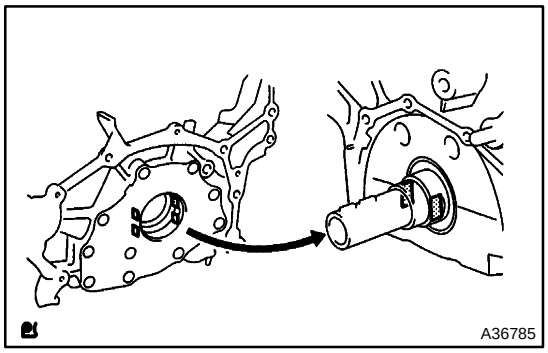

(f) Align the key of the oil pump drive gear with the key way located on the crankshaft, and slide the oil pump into place.

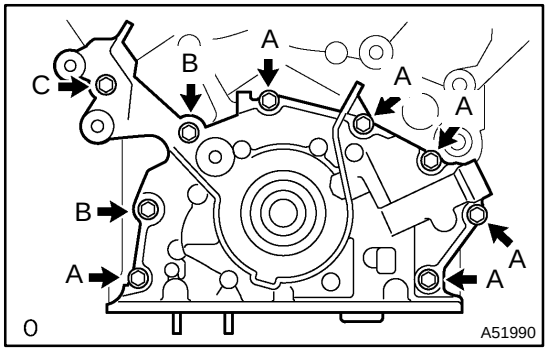

(g) Install the oil pump by tightening the 9 bolts uniformly.
Torque:
8.0 N·m (82 kgf·cm, 71 in.·lbf) for bolt A
20 N·m (203 kgf·cm, 15 ft·lbf) for bolt B
43 N·m (439 kgf·cm, 32 ft·lbf) for bolt C

36. INSTALL CRANKSHAFT POSITION SENSOR
Torque: 8 N·m (82 kgf·cm, 71 in.·lbf)

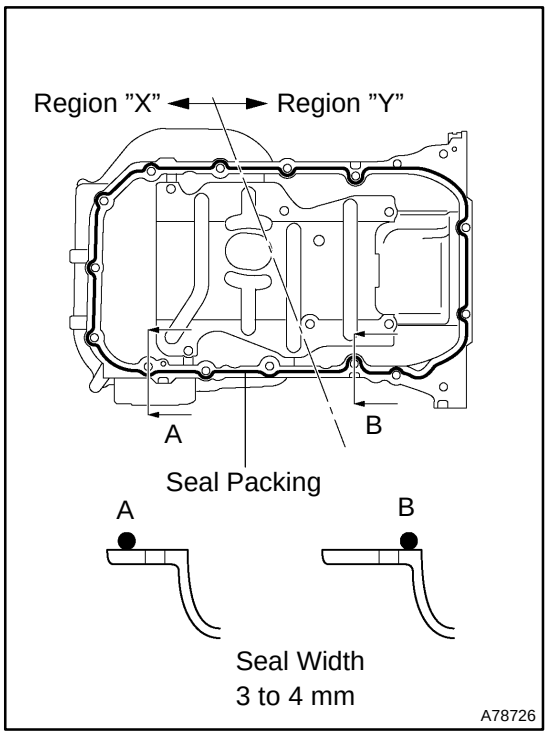

37. INSTALL OIL PAN SUB−ASSY

(a) Remove any old seal packing from the contact surface.

(b) Apply a continuous bead of seal packing (diameter 3 to 4 mm (0.12 to 0.16 in.)) as shown in the illustration.

Seal packing: Part No. 08826−00080 or equivalent

NOTICE:

- **Remove any oil from the contact surface.**
- **Apply seal packing to the outer side of the bolt holes in the region ”X”.**
- **Apply seal packing to the inner side of the bolt holes in the region ”Y”.**
- **Install the oil pan within 3 minutes after applying seal packing.**
- **Do not expose the seal to engine oil for at least 2 hours after installing the oil pan.**

(c) Install the oil pan No.1 by tightening the oil pan’s 17 bolts and 2 nuts uniformly.

Torque:
8.0 N·m (82 kgf·cm, 71 in.·lbf) for 10 mm head
20 N·m (204 kgf·cm, 15 ft·lbf) for 12 mm head
37 N·m (379 kgf·cm, 27 ft·lbf) for 14 mm head

(d) Install the flywheel housing under cover with the 2 bolts.

Torque: 7.8 N·m (80 kgf·cm, 69 in.·lbf)

38. INSTALL OIL STRAINER SUB−ASSY

(a) Install a new gasket and the oil strainer with the bolt and 2 nuts.

Torque: 8 N·m (82 kgf·cm, 71 in.·lbf)

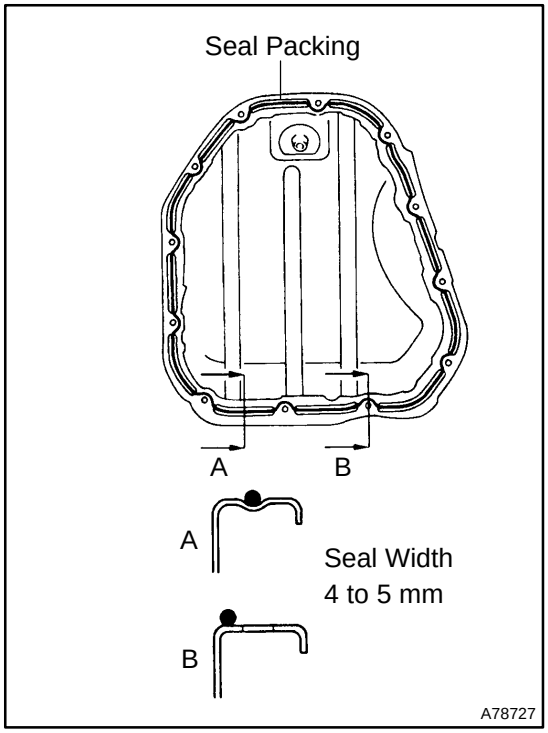

39. INSTALL OIL PAN SUB−ASSY NO.2

(a) Remove any old seal packing from the contact surface.

(b) Apply a continuous bead of seal packing (diameter 4 to 5 mm (0.16 to 0.20 in.)) as shown in the illustration.

Seal packing: Part No. 08826−00080 or equivalent

NOTICE:

- **Remove any oil from the contact surface.**
- **Apply seal packing to the inner side of the bolt holes.**
- **Install the oil pan within 3 minutes after applying seal packing.**
- **Do not expose the seal to engine oil for at least 2 hours after installing the oil pan.**

(c) Install the oil pan with the 10 bolts and 2 nuts.

Torque: 8.0 N·m (82 kgf·cm, 71 in.·lbf)

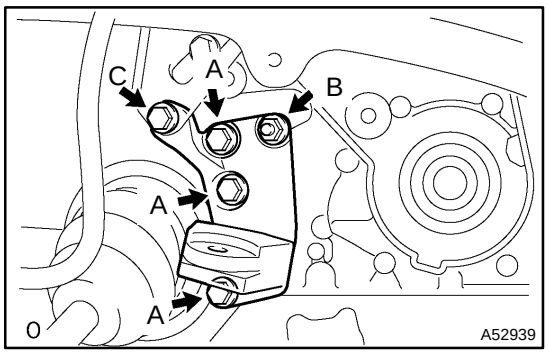

40. INSTALL ENGINE MOUNTING BRACKET RH
Torque:
54 N·m (550 kgf·cm, 40 ft·lbf) for bolt A
54 N·m (550 kgf·cm, 40 ft·lbf) for nut B
43 N·m (439 kgf·cm, 32 ft·lbf) for bolt C

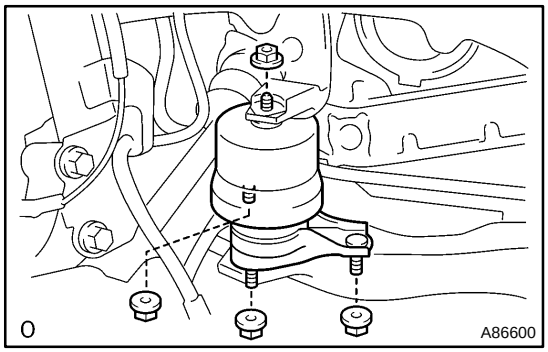

41. INSTALL ENGINE MOUNTING INSULATOR RH
Torque:
95 N·m (969 kgf·cm, 70 ft·lbf) for nut A
87 N·m (887 kgf·cm, 64 ft·lbf) for nut B

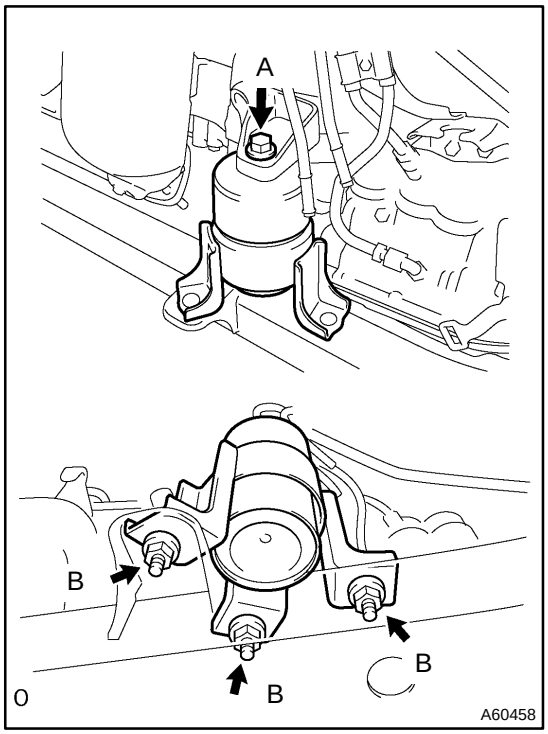

42. INSTALL ENGINE MOUNTING INSULATOR FR
Torque:
87 N·m (887 kgf·cm, 64 ft·lbf) for bolt A
52 N·m (531 kgf·cm, 38 ft·lbf) for nut B

43. INSTALL OIL LEVEL GAGE GUIDE

(a) Install a new O−ring, bolt and gage guide.
Torque: 8 N·m (82 kgf·cm, 71 in.·lbf)

44. INSTALL COMPRESSOR MOUNTING BRACKET NO.1
Torque: 25 N·m (250 kgf·cm, 18 ft·lbf)

45. INSTALL TIMING BELT NO.3 COVER (See page 14−186)

46. INSTALL TIMING BELT IDLER SUB−ASSY NO.1

(a) Using a 10 mm hexagon wrench, install the plate washer and idler pulley with the pivot bolt.
Torque: 34 N·m (347 kgf·cm, 25 ft·lbf)

47. INSTALL TIMING BELT IDLER SUB−ASSY NO.2 (See page 14−186)

48. INSTALL CAMSHAFT TIMING PULLEY (See page 14−186)
49. INSTALL COMPRESSOR AND MAGNETIC CLUTCH
    Torque: 25 N·m (250 kgf·cm, 18 ft·lbf)
50. INSTALL EXHAUST PIPE SUPPORT BRACKET NO.1 (See page 15−7)
51. INSTALL EXHAUST PIPE ASSY FRONT (See page 15−7)
52. INSTALL EXHAUST PIPE NO.1 SUPPORT BRACKET (See page 15−7)
53. INSPECT TIMING BELT (See page 14−186)
54. INSTALL TIMING BELT (See page 14−186)
55. INSTALL TIMING BELT GUIDE NO.2
56. INSTALL TIMING BELT NO.2 COVER (See page 14−186)
57. INSTALL TIMING BELT NO.1 COVER (See page 14−186)
58. INSTALL CRANKSHAFT PULLEY (See page 14−186)
59. INSTALL GENERATOR BRACKET NO.2
    Torque: 28 N·m (286 kgf·cm, 21 in.·lbf)
60. INSTALL ENGINE MOUNTING STAY NO.2 RH (See page 14−164)
61. INSTALL ENGINE MOVING CONTROL ROD (See page 14−164)
62. INSTALL VANE PUMP V BELT (See page 14−140)
63. INSTALL V BELT NO. 1 (See page 14−140)
64. INSPECT DRIVE BELT TENSION (See page 14−136)
65. INSTALL FRONT SUSPENSION UPPER BRACE CENTER (W/ FRONT SUSPENSION BRACE UPPER CENTER)
    Torque: 80 N·m (816 kgf·cm, 59 ft·lbf)
66. ADD ENGINE OIL
67. INSPECT CHECK FOR ENGINE OIL LEAKS
68. INSTALL FRONT WHEEL RH
69. CHECK FOR EXHAUST GAS LEAKS

1701I−08

OVERHAUL

1. REMOVE OIL PUMP RELIEF VALVE

(a) Remove the plug, spring and relief valve.

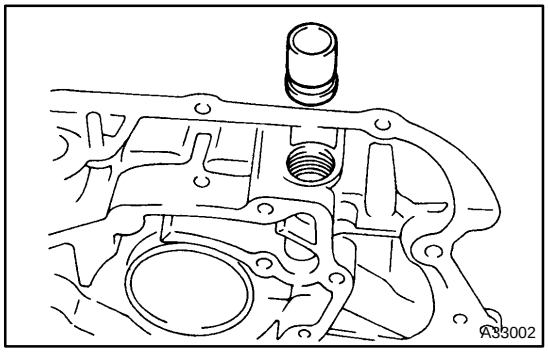

2. INSPECT OIL PUMP RELIEF VALVE

(a) Apply a light coat of engine oil.

(b) Check that the valve falls smoothly into the valve hole by its own weight.

If it does not, replace the relief valve. If necessary, replace the oil pump assy.

3. INSPECT OIL PUMP COVER

(a) Remove the 10 screws and the oil pump cover.

4. INSPECT OIL PUMP ROTOR

(a) Apply a light coat of engine oil to the oil pump rotor set and place them into the oil pump body. Check that the rotors revolve smoothly.

If the result is not as specified, replace the oil pump assy.

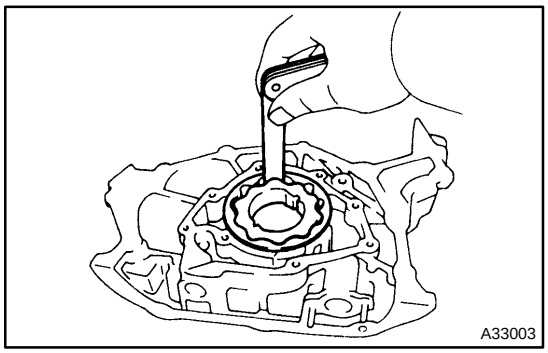

(b) Check the clearance between the drive tips and driven rotor grooves.

(1) Insert a feeler gauge between each drive tip and driven rotor groove. Measure the clearances.

Specified tip clearance:
0.060 to 0.300 mm (0.0024 to 0.0118 in.)

If the tip clearance is greater than the maximum, replace the oil pump assy.

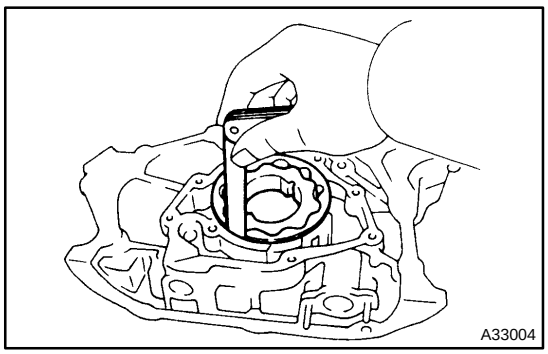

(c) Check the clearance between the driven rotor and body.

(1) Insert a feeler gauge between the driven rotor and body. Measure the clearance.

Specified body clearance:
0.250 to 0.500 mm (0.0098 to 0.0128 in.)

If the body clearance is greater than the maximum, replace the oil pump assy.

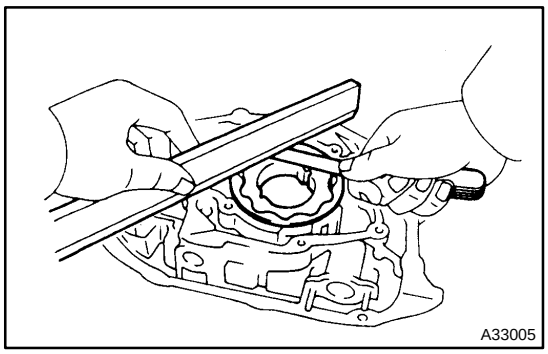

(d) Check the clearance between the drive and driven rotor.
(1) Place a precision straight edge on the top surface of the drive. Insert a feeler gauge between the bottom edge of the precision straight edge and the top surface of the driven rotor. Measure the clearance.

Specified side clearance:
0.030 to 0.150 mm (0.0012 to 0.0059 in.)

If the side clearance is greater than the maximum, replace the oil pump assy.

5. REMOVE OIL PUMP ROTOR

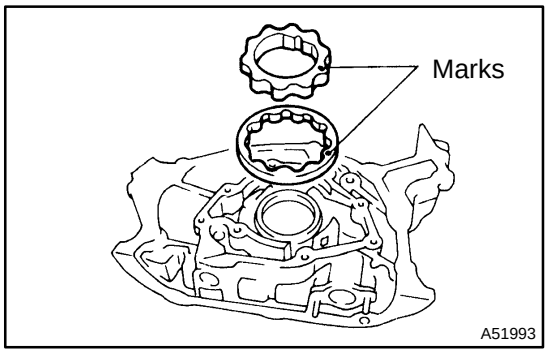

6. INSTALL OIL PUMP ROTOR

(a) Apply a light coat of engine oil to the oil pump gear set and place it into the pump body with the marks facing the pump body cover side.

7. INSTALL OIL PUMP COVER

(a) Install the oil pump cover with the 10 screws.
Torque: 10 N·m (102 kgf·cm, 7 ft·lbf)

8. INSTALL OIL PUMP RELIEF VALVE

(a) Apply a light coat of engine oil to the relief valve, and insert the relief valve and spring into the pump body hole.

(b) Install the plug.
Torque: 49 N·m (500 kgf·cm, 36 ft·lbf)

IGNITION SYSTEM (2AZ−FE)(From July, 2003)

1809Q−05

ON−VEHICLE INSPECTION

NOTICE:

In this section, the terms “cold” and “hot” refer to the temperature of the coils. ”Cold” means approximately −10°C (14°F) to 50°C (122°F). ”Hot” means approximately 50°C (122°F) to 100°C (212°F).

1. INSPECT IGNITION COIL ASSY (WITH IGNITER) AND PERFORM SPARK TEST

(a) Check for DTCs.

NOTICE:

If a DTC is present, perform troubleshooting in accordance with the procedure for that DTC.

(b) Check if sparks occur.

(1) Remove the engine cover No. 1 (see page 14−29).
(2) Remove the ignition coils.
(3) Using a 16 mm (0.63 in.) plug wrench, remove the spark plugs.
(4) Install the spark plugs to each ignition coil and connect the ignition coil connectors.
(5) Disconnect the 4 injector connectors.
(6) Ground the spark plugs.
(7) Check if sparks occur at each spark plug while the engine is being cranked.

NOTICE:

Do not crank the engine for more than 2 seconds.

If the sparks do not occur, perform the following test:

SPARK TEST

↓ NG

CHECK IF WIRE HARNESS SIDE CONNECTOR OF IGNITION COIL (WITH IGNITER) IS SECURE → NG → Connect securely.

↓ OK

PERFORM SPARK TEST WITH A DIFFERENT IGNITION COIL (WITH IGNITER)
1. Replace current ignition coil (with igniter) with a different, functioning ignition coil (with igniter).
2. Perform spark test again.

→ OK → If sparks occur, replace faulty ignition coil (with igniter).

↓ NG

CHECK POWER SUPPLY TO IGNITION COIL (WITH IGNITER)
1. Turn ignition switch ON.
2. Check that there is battery voltage at ignition coil positive (+) terminal.

→ NG → Check wiring between ignition switch to ignition coil (with igniter).

↓ OK

CHECK RESISTANCE OF CAMSHAFT POSITION SENSOR(See page 18−3)

	Cold	Hot
Standard:	**835 to 1,400 Ω**	**1,060 to 1,645 Ω**

→ NG → Replace camshaft position sensor.

↓ OK

Continue on next page

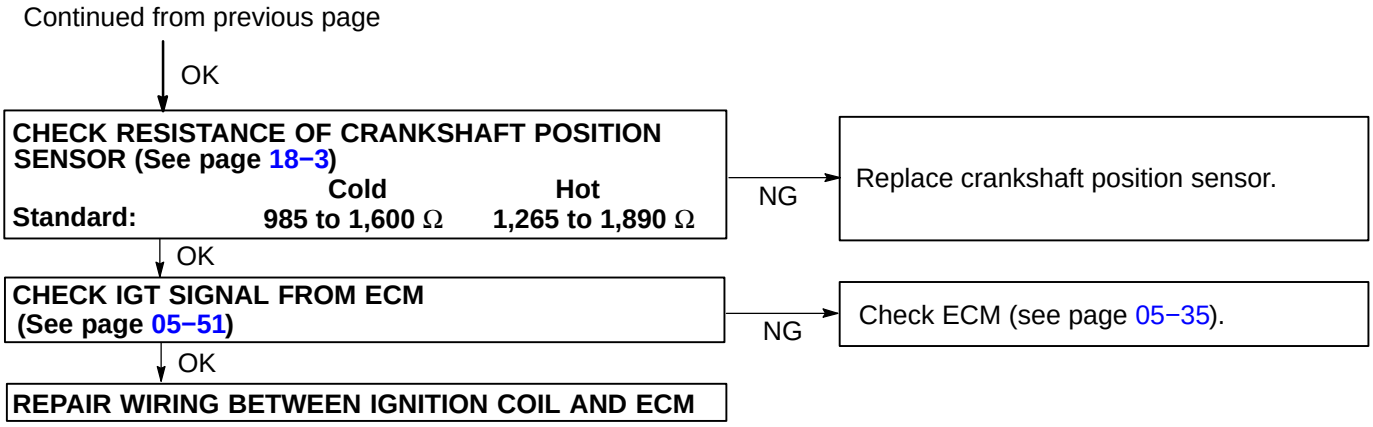

(8) Using a 16 mm (0.63 in.) plug wrench, install the spark plugs.
Torque: 19 N·m (194 kgf·cm, 14 ft·lbf)
(9) Install the ignition coils.
Torque: 9.0 N·m (92 kgf·cm, 80 in.·lbf)
(10) Install the engine cover No. 1.
Torque: 7.0 N·m (71 kgf·cm, 62 in.·lbf)

1809R−02

INSPECTION

NOTICE:

In this section , the terms “cold”and “hot” refer to the temperature of the coils. “Cold” means approximately −10 C (14 F) to 50 C (122 F). ”Hot” means approximately 50 C (122 F) to 100 C (212 F).

1. INSPECT SPARK PLUG

NOTICE:

- **Do not use a wire brush for cleaning.**
- **Do not attempt to adjust the electrode gap of a used spark plug.**

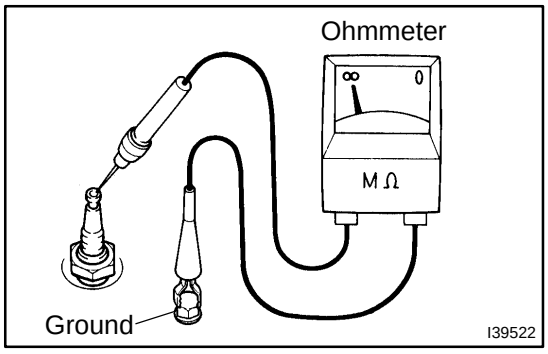

(a) Check the electrode.

(1) Using an ohmmeter, measure the insulation resistance.

Correct insulation resistance: 10 MΩ or more

If the resistance is less than the specified value, proceed to step (d).

HINT:

If the ohmmeter is not available, perform the following simple inspection instead.

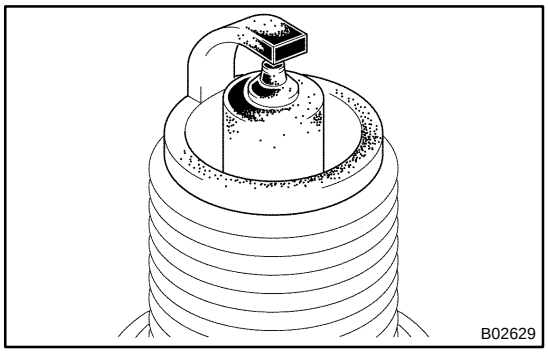

(b) Alternative inspection method:

(1) Quickly accelerate the engine to 4,000 rpm 5 times.

(2) Remove the spark plug.

(3) Visually check the spark plug.

- If the electrode is dry, the spark plug is functioning. Proceed to step 2.
- If the electrode is damp, proceed to steps (c), (d), and (e).

(4) Install the spark plug.

(c) Check the spark plug for any damage on its thread and insulator.

If there is damage, replace the spark plug.

Recommended spark plug:

DENSO made	SK20R11
NGK made	IFR6A11

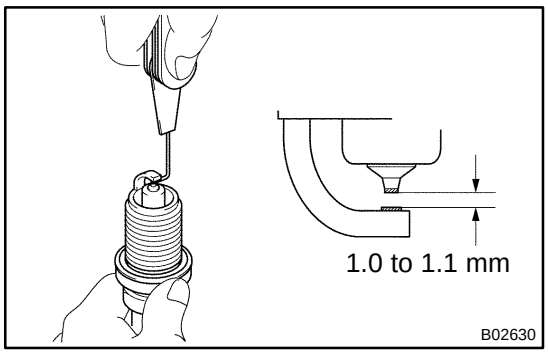

(d) Check the spark plug electrode gap.

Maximum electrode gap for used spark plug:

P−ZEV	1.33 mm (0.052 in.)
Except P−ZEV	1.3 mm (0.051 in.)

If the gap is greater than the maximum, replace the spark plug.

Correct electrode gap for new spark plug:
1.0 to 1.1 mm (0.039 to 0.043 in.)

NOTICE:

If adjusting the gap of a new spark plug, bend only the base of the ground electrode. Do not touch the tip. Never attempt to adjust the gap on a used plug.

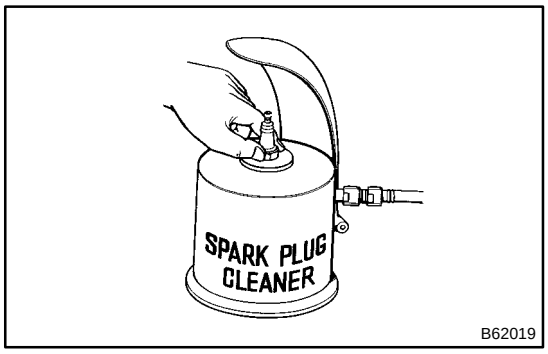

(e) Clean the spark plugs.

If the electrode has traces of wet carbon, clean the electrode with a spark plug cleaner and then dry it.

Air pressure: 588 kPa (6 kgf/cm^2, 85 psi)
Duration: 20 seconds or less

HINT:

Use the spark plug cleaner only when the electrode is free of oil. If the electrode has traces of oil, use gasoline to clean off the oil before using the spark plug cleaner.

2. INSPECT CAMSHAFT POSITION SENSOR

(a) Using an ohmmeter, measure the resistance between the terminals.

Standard:

Temperature	Specified Condition
Cold	835 to 1,400 Ω
Hot	1,060 to 1,645 Ω

If the resistance is not as specified, replace the sensor.

3. INSPECT CRANKSHAFT POSITION SENSOR

(a) Using an ohmmeter, measure the resistance between the terminals.

Standard:

Temperature	Specified Condition
Cold	985 to1,600 Ω
Hot	1,265 to 1,890 Ω

If the resistance is not as specified, replace the sensor.

CAMSHAFT POSITION SENSOR (2AZ−FE)(From July, 2003)

1809S−03

REPLACEMENT

HINT:

A bolt without torque specification is a standard bolt (see page 03−2).

1. REMOVE AIR CLEANER ASSY (See page 14−29)

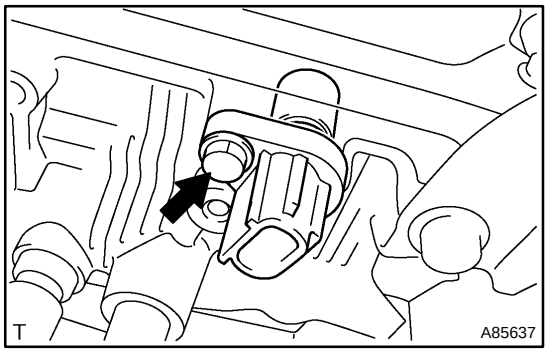

2. REMOVE CAMSHAFT POSITION SENSOR

(a) Disconnect the sensor connector.

(b) Remove the bolt and sensor.

3. INSTALL CAMSHAFT POSITION SENSOR

(a) Apply a light coat of engine oil to the O−ring on the sensor.

(b) Install the sensor with the bolt.

Torque: 9.0 N·m (92 kgf·cm, 80in.·lbf)

4. INSTALL AIR CLEANER ASSY (See page 14−29)

5. CHECK CONNECTION OF VACUUM HOSE

CRANKSHAFT POSITION SENSOR (2AZ−FE)(From July, 2003)

1809T−03

REPLACEMENT

HINT:

A bolt without torque specification is a standard bolt (see page 03−2).

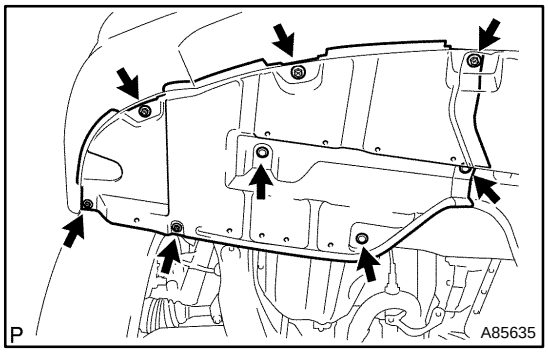

1. REMOVE ENGINE UNDER COVER RH

(a) Remove the 5 screws, 3 clips and the under cover.

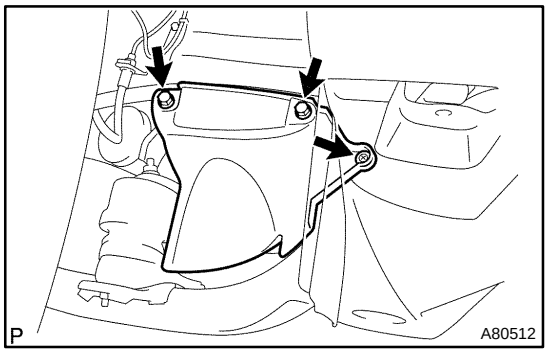

2. REMOVE FRONT FENDER APRON SEAL RH

(a) Remove the clip, 2 bolts and apron seal.

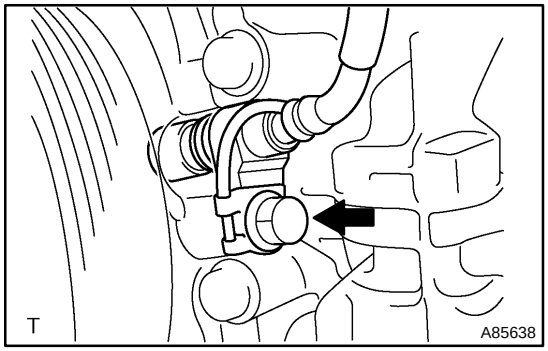

3. REMOVE CRANKSHAFT POSITION SENSOR

(a) Disconnect the sensor connector.

(b) Remove the bolt, clamp and sensor.

4. INSTALL CRANKSHAFT POSITION SENSOR
Torque: 9.0 N·m (92 kgf·cm, 80 in.·lbf)

5. INSTALL FRONT FENDER APRON SEAL RH

6. INSTALL ENGINE UNDER COVER RH

IGNITION SYSTEM (1MZ−FE/3MZ−FE)

1809U−03

ON−VEHICLE INSPECTION

NOTICE:

In this section, the terms “cold” and “hot” refer to the temperature of the coils. “Cold” means approximately −10°C (14°F) to 50°C (122°F). “Hot” means approximately 50°C (122°F) to 100°C (212°F).

1. INSPECT IGNITION COIL ASSY (WITH IGNITER) AND PERFORM SPARK TEST

(a) Check for DTCs.

NOTICE:

If a DTC is present, perform troubleshooting in accordance with the procedure for that DTC.

(b) Check if sparks occur.

(1) Remove the V−bank cover (see page 14−164).
(2) Remove the intake air surge tank (see page 14−164).
(3) Remove the ignition coils.
(4) Using a 16 mm (0.63 in.) plug wrench, remove the spark plugs.
(5) Install the spark plugs to each ignition coil and connect the ignition coil connectors.
(6) Disconnect the 6 injector connectors.
(7) Ground the spark plugs.
(8) Check if sparks occur at each spark plug while the engine is being cranked.

NOTICE:

Do not crank the engine for more than 2 seconds.

If sparks do not occur, perform the following test:

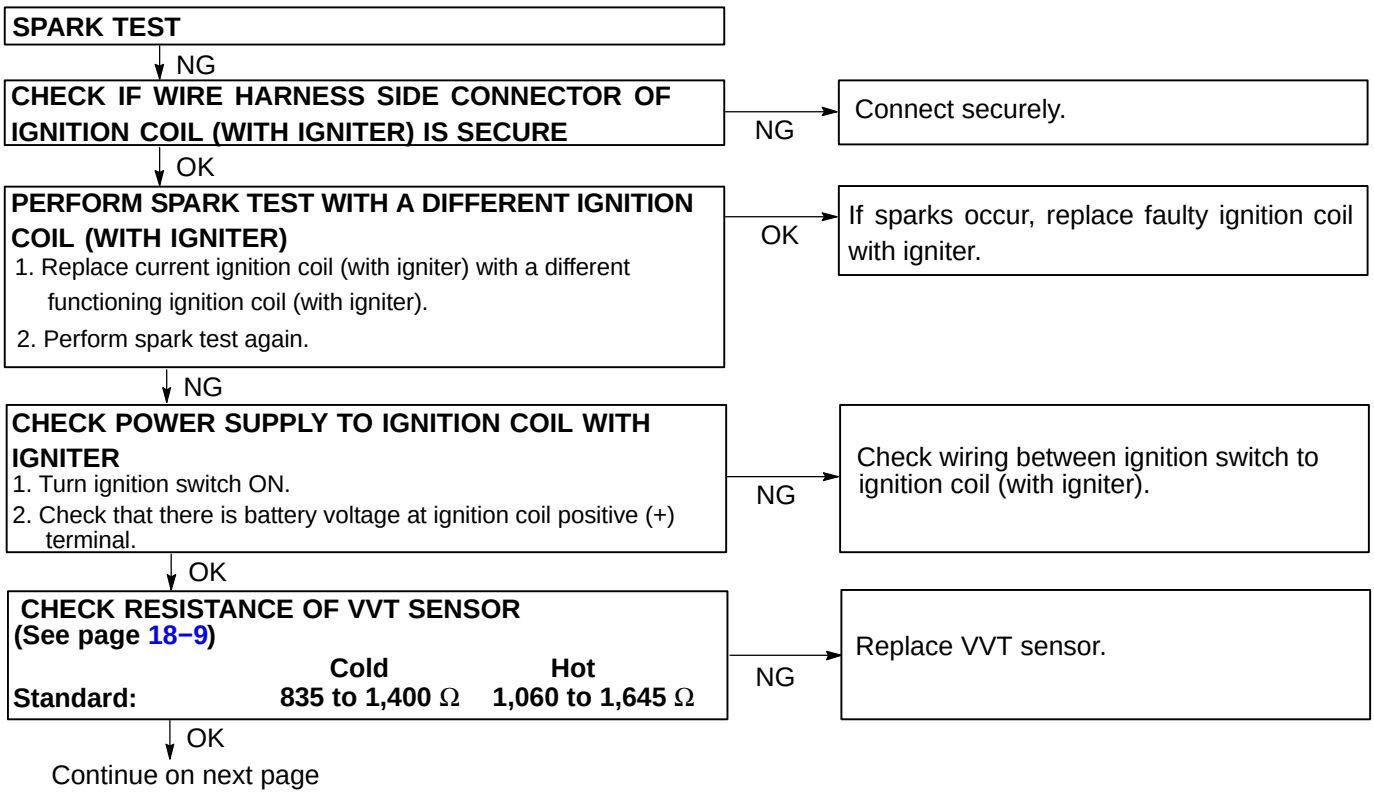

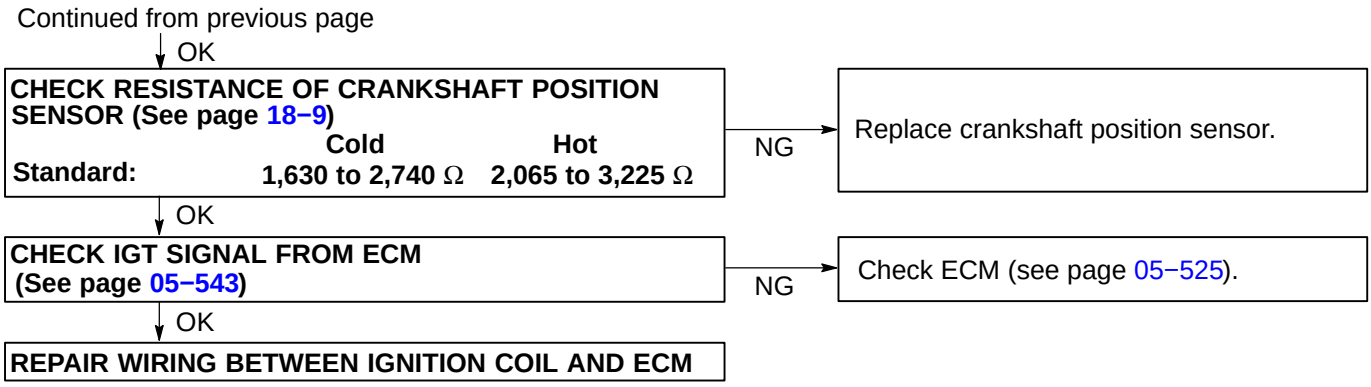

(9) Using a 16 mm (0.63 in.) plug wrench, install the spark plugs.

Torque: 25 N·m (255 kgf·cm, 18.5 ft·lbf)

(10) Install the ignition coil.

Torque: 8.0 N·m (82 kgf·cm, 71 in.·lbf)

(11) Install the intake air surge tank (see page 14−164).

(12) Install the V−bank cover (see page 14−164).

INSPECTION

NOTICE:

In this section, the terms “cold” and “hot” refer to the temperature of the coils. “Cold” means approximately −10 C (14 F) to 50 C (122 F). “Hot” means approximately 50 C (122 F) to 100 C (212 F).

1. INSPECT SPARK PLUG

NOTICE:

- **Do not use a wire brush for cleaning.**
- **Do not attempt to adjust the electrode gap of a used spark plug.**

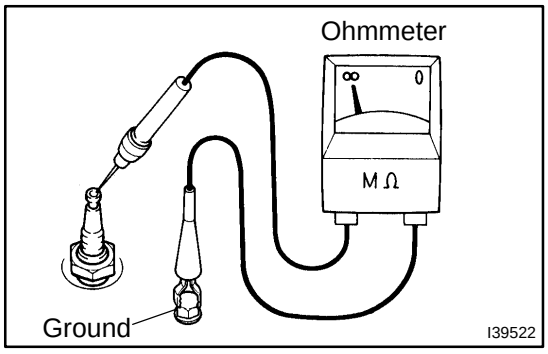

(a) Check the electrode.

(1) Using an ohmmeter, measure the insulation resistance.

Correct insulation resistance: 10 MΩ or more

If the resistance is less than the specified value, proceed to step (d).

HINT:

If the ohmmeter is not available, perform the following simple inspection instead.

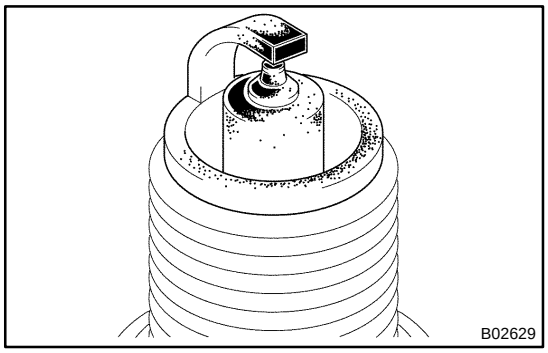

(b) Alternative inspection method:

(1) Quickly accelerate the engine to 4,000 rpm 5 times.

(2) Remove the spark plug.

(3) Visually check the spark plug.

- If the electrode is dry, the spark plug is functioning. Proceed to step 2.
- If the electrode is damp, proceed to steps (c), (d) and (e).

(4) Install the spark plug.

(c) Check the spark plug for any damage on its thread and insulator.

If there is damage, replace the spark plug.

Recommended spark plug:

DENSO made	SK20R11
NGK made	IFR6A11

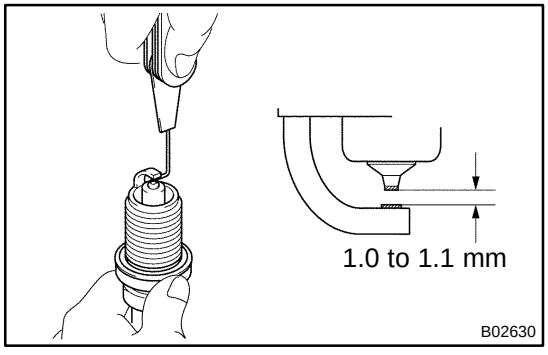

(d) Check the spark plug electrode gap.

Maximum electrode gap for used spark plug:
1.3 mm (0.051 in.)

If the gap is greater than the maximum, replace the spark plug.

Correct electrode gap for new spark plug:
1.0 to 1.1 mm (0.039 to 0.043 in.)

NOTICE:

If adjusting the gap of a new spark plug, bend only the base of the ground electrode. Do not touch the tip. Never attempt to adjust the gap on a used plug.

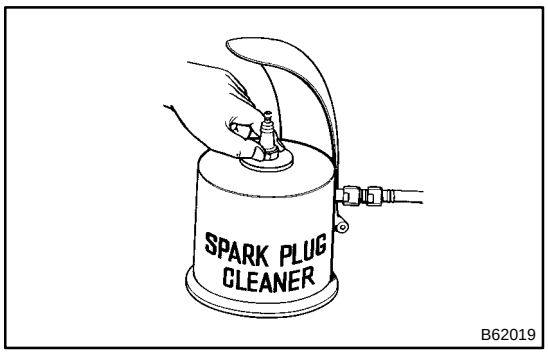

(e) Clean the spark plugs.

If the electrode has traces of wet carbon, clean the electrode with a spark plug cleaner and then dry it.

Air pressure: 588 kPa (6 kgf/cm^2, 85 psi)

Duration: 20 seconds or less

HINT:

Only use the spark plug cleaner when the electrode is free of oil. If the electrode has traces of oil, use gasoline to clean off the oil before using the spark plug cleaner.

2. INSPECT VVT SENSOR (CAMSHAFT POSITION SENSOR)

(a) Using an ohmmeter, measure the resistance between the terminals.

Standard:

Temperature	Specified Condition
Cold	835 to 1,400 Ω
Hot	1,060 to 1,645 Ω

If the resistance is not as specified, replace the sensor.

3. INSPECT CRANKSHAFT POSITION SENSOR

(a) Using an ohmmeter, measure the resistance between the terminals.

Standard:

Temperature	Specified Condition
Cold	1,630 to 2,740 Ω
Hot	2,065 to 3,225 Ω

If the resistance is not as specified, replace the sensor.

VVT SENSOR (1MZ−FE/3MZ−FE)

1809W−02

REPLACEMENT

HINT:

A bolt without torque specification is a standard bolt (see page 03−2).

1. REMOVE AIR CLEANER INLET ASSY

2. REMOVE AIR CLEANER ASSY (See page 14−164)

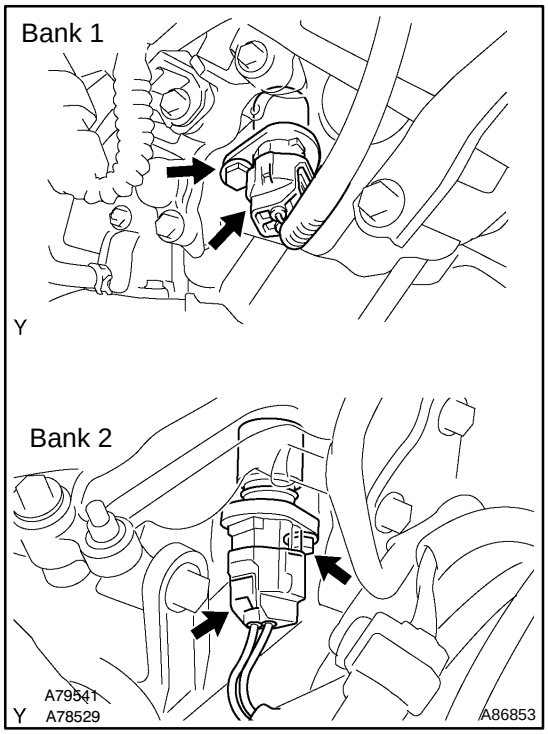

3. REMOVE VVT SENSOR

(a) Disconnect the sensor connector.

(b) Remove the bolt and sensor.

4. INSTALL VVT SENSOR

(a) Apply a light coat of engine oil to the O−ring on the sensor.

(b) Install the sensor with the bolt.

Torque: 8.0 N·m (82 kgf·cm, 71 in.·lbf)

(c) Connect the sensor connector.

5. INSTALL AIR CLEANER ASSY (See page 14−164)

6. INSTALL AIR CLEANER INLET ASSY

7. CHECK CONNECTION OF VACUUM HOSE

CRANKSHAFT POSITION SENSOR (1MZ−FE/3MZ−FE)

1809X−02

REPLACEMENT

HINT:
A bolt without torque specification is a standard bolt (see page 03−2).

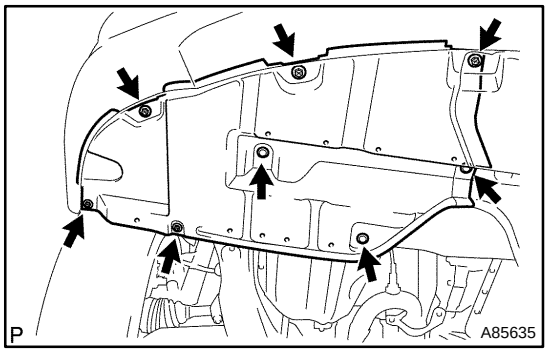

1. REMOVE ENGINE UNDER COVER RH

(a) Remove the 5 screws, 3 clips and the under cover.

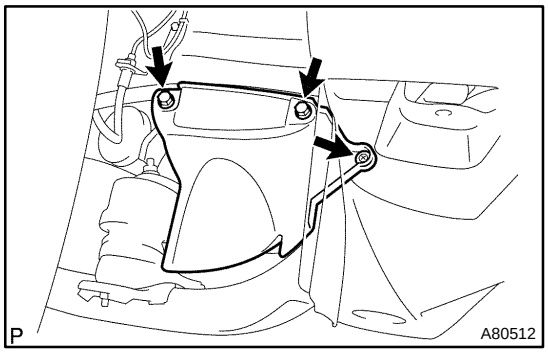

2. REMOVE FRONT FENDER APRON SEAL RH

(a) Remove the clip, 2 bolts and apron seal.

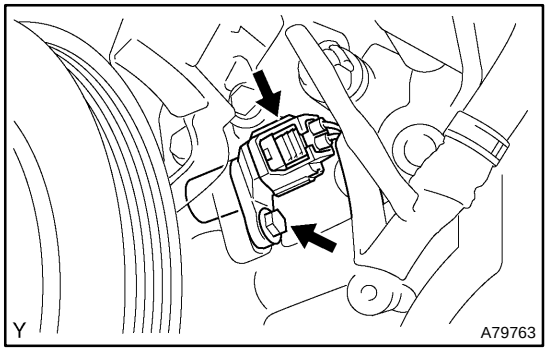

3. REMOVE CRANKSHAFT POSITION SENSOR

(a) Disconnect the sensor connector.
(b) Remove the bolt and sensor.

4. INSTALL CRANKSHAFT POSITION SENSOR
Torque: 8.0 N·m (82 kgf·cm, 71 in.·lbf)

5. INSTALL FRONT FENDER APRON SEAL RH

6. INSTALL ENGINE UNDER COVER RH

STARTING SYSTEM (2AZ−FE)(From July, 2003)

190RS−03

INSPECTION

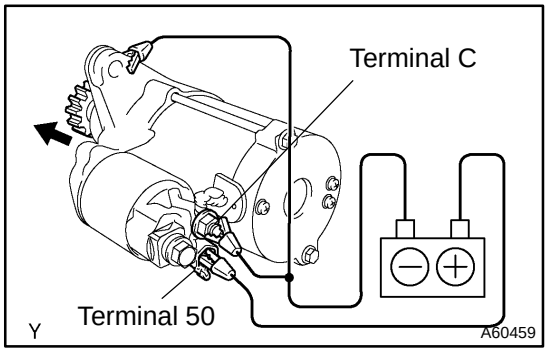

1. INSPECT STARTER ASSY

NOTICE:

These tests must be performed within 3 to 5 seconds to avoid burning out the coil.

(a) Do the pull−in test.

(1) Disconnect the lead wire from terminal C.

(2) Connect the battery to the magnetic switch as shown in the illustration on the left. Check that the clutch pinion gear extends.

If the clutch pinion gear does not move, replace the magnetic switch.

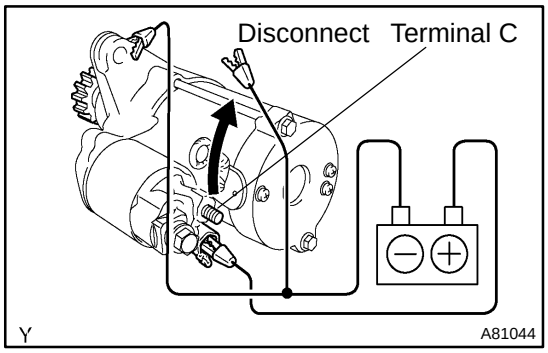

(b) Do the hold−in test.

(1) Leave the battery connections in step (a), but disconnect the negative (−) lead from terminal C. Check that the pinion gear remains extended.

If the clutch pinion gear returns inward, replace the magnetic switch.

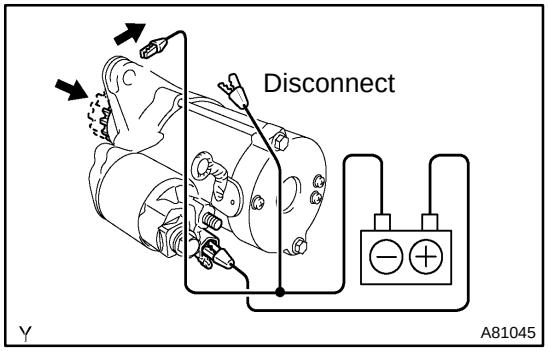

(c) Check the clutch pinion gear return.

(1) Disconnect the negative (−) lead from the switch body. Check that the clutch pinion gear returns.

If the clutch pinion gear does not return, replace the magnetic switch.

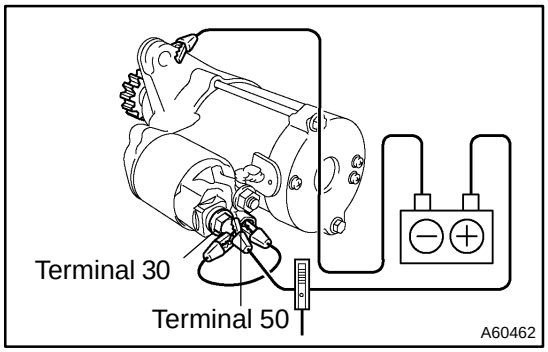

(d) Do the no−load performance test.

(1) Connect the lead wire to terminal C. Make sure that the lead is not grounded.

(2) Clamp the starter in a vise.

(3) Connect the battery and an ammeter to the starter as shown in the illustration.

(4) Check that the starter rotates smoothly and steadily with the clutch pinion gear extended. Check that the ammeter reads the specified current.

Specified current: 90 A or less at 11.5 V

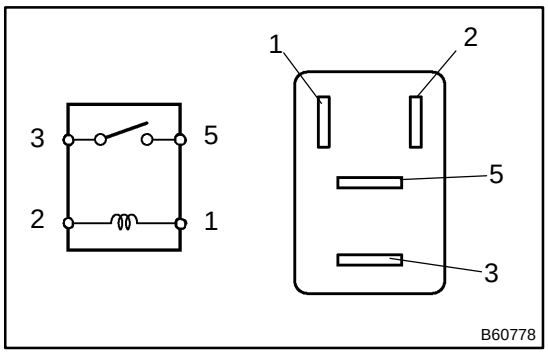

2. INSPECT STARTER RELAY ASSY

(a) Check the resistance of the ST relay.

Standard:

Tester Connection	Specified Condition
3−5	10 kΩ or higher
3−5	Below 1Ω (when battery voltage is applied to terminals 1 and 2)

If the result is not as specified, replace the relay.

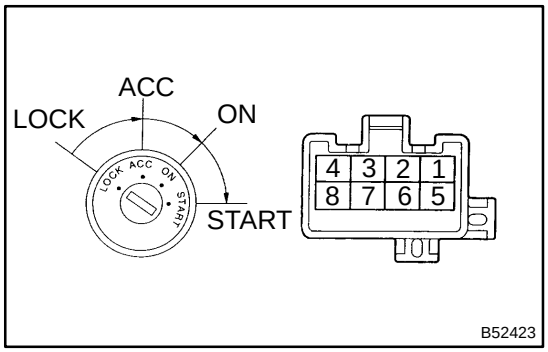

3. INSPECT IGNITION OR STARTER SWITCH ASSY

(a) Inspect the switch resistance.

Standard:

Tester Connection	Switch Condition	Specified Condition
−	LOCK	10 kΩ or higher
2 − 3	ACC	Below 1 Ω
2 − 3 2 − 4 6 − 7	ON	Below 1 Ω
1 − 2 1 − 4 6 − 7 6 − 8	START	Below 1 Ω

If the result is not as specified, replace the switch assy.

IGNITION OR STARTER SWITCH ASSY (2AZ−FE)(From July, 2003)

190SP−03

REPLACEMENT

The installation procedures are the removal procedures in reverse order.

1. DISCONNECT BATTERY NEGATIVE TERMINAL

2. REMOVE INSTRUMENT PANEL SUB−ASSY UPPER (See page 71−16)

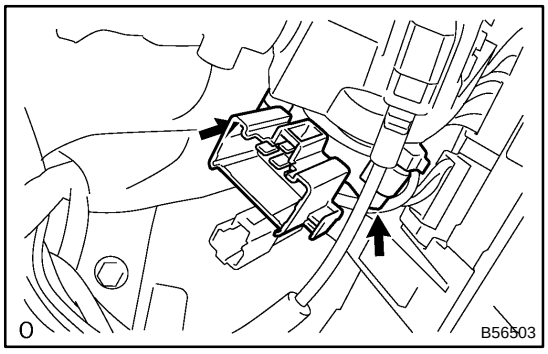

3. REMOVE IGNITION OR STARTER SWITCH ASSY

(a) Disconnect the ignition switch connector and unlock warning switch connector.

(b) Remove the clamp.

(c) Remove the 2 screws and ignition switch.

STARTER ASSY (2AZ−FE)(From July, 2003)

190RU−02

COMPONENTS

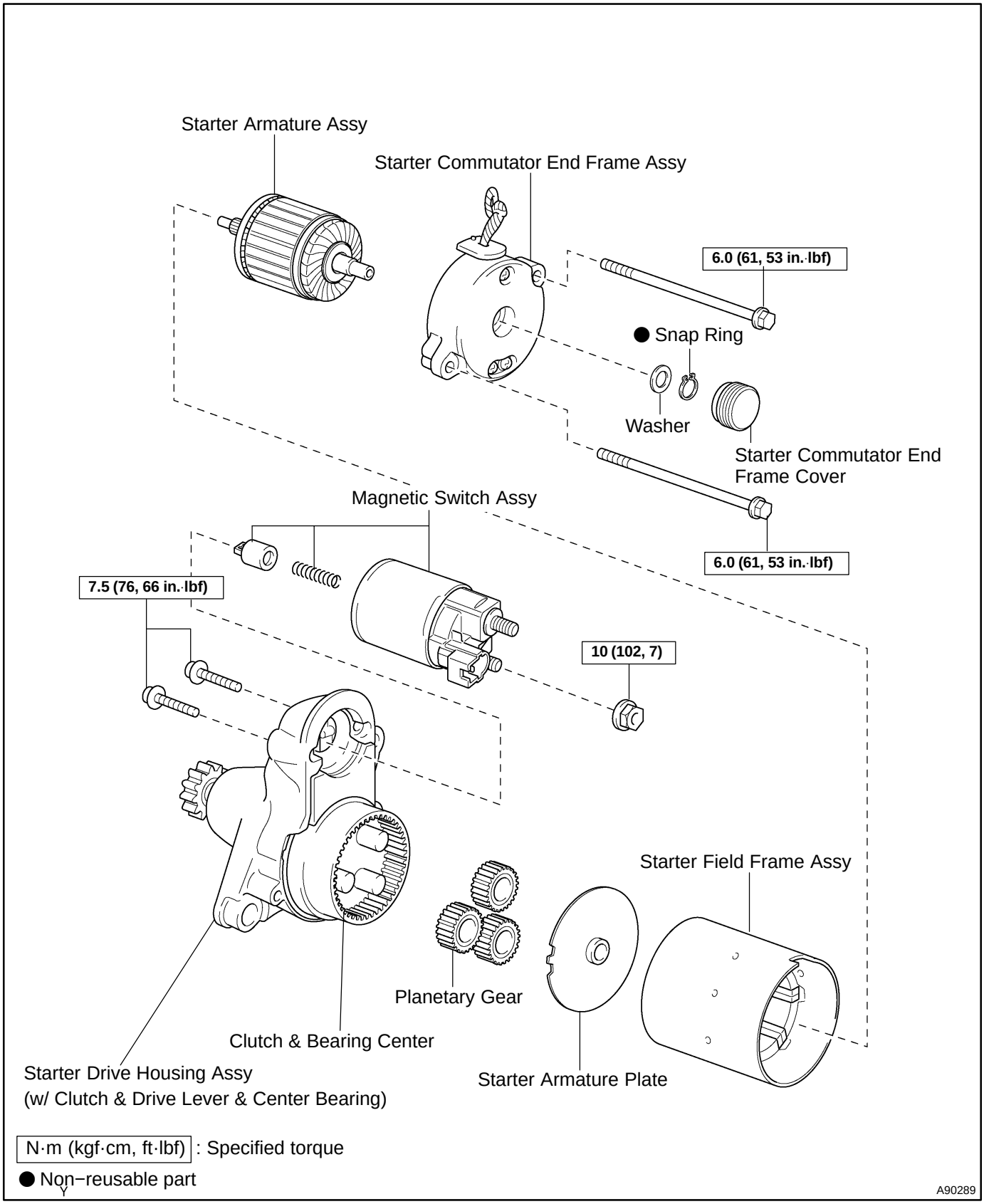

N·m (kgf·cm, ft·lbf) : Specified torque

● Non−reusable part

A90289

REPLACEMENT

NOTICE:

Before changing the starter, check these items again:

- **Connector connection**
- **Accessory installation**

1. REMOVE BATTERY

2. REMOVE BATTERY TRAY

3. REMOVE AIR CLEANER ASSY

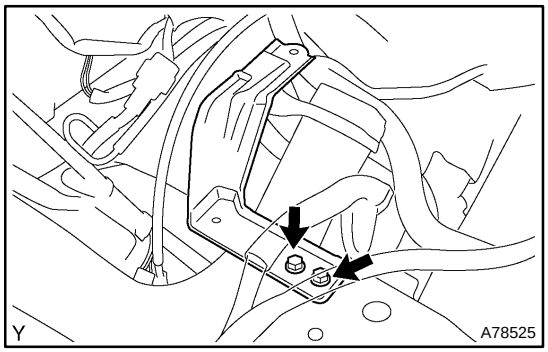

4. REMOVE AIR CLEANER BRACKET

(a) Remove the 2 bolts and air cleaner bracket.

5. REMOVE AIR CLEANER INLET ASSY

(a) Remove the 2 bolts and air cleaner inlet.

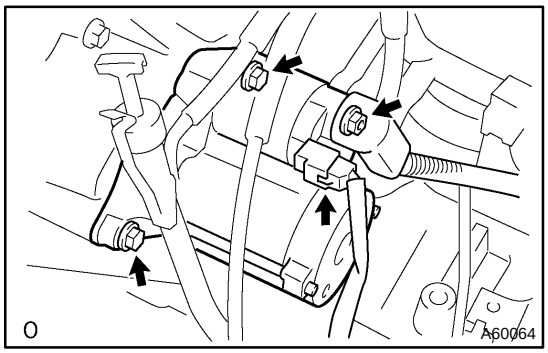

6. REMOVE STARTER ASSY

(a) Disconnect the starter connector.

(b) Remove the nut and disconnect the starter wire.

(c) Remove the 2 bolts and starter.

7. INSTALL STARTER ASSY

(a) Install the and starter with the 2 bolts.
Torque: 39 N·m (398 kgf·cm, 29 ft·lbf)

(b) Install the starter wire and the nut.
Torque: 13 N·m (130 kgf·cm, 9 ft·lbf)

(c) Connect the starter connector.

8. INSTALL AIR CLEANER BRACKET

(a) Install the air cleaner bracket with the 2 bolts.
Torque: 12 N·m (122 kgf·cm, 9 ft·lbf)

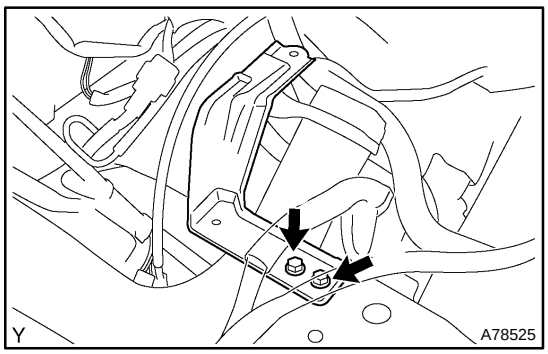

9. INSTALL AIR CLEANER ASSY
Torque: 5.0 N·m (51 kgf·cm, 44 in.·lbf)

10. INSTALL AIR CLEANER INLET ASSY

(a) Install the air cleaner inlet with the 2 bolts.
Torque: 7.0 N·m (71 kgf·cm, 62 in.·lbf)

11. CHECK CONNECTION OF VACUUM HOSE

12. INSTALL BATTERY TRAY

13. INSTALL BATTERY

(a) Install the battery clamp with the bolt and nut.
Torque: 5.5 N·m (56 kgf·cm, 49 in·lbf)

(b) Connect the wires to the battery terminals.
Torque: 3.5 N·m (36 kgf·cm, 31 in.·lbf)

OVERHAUL

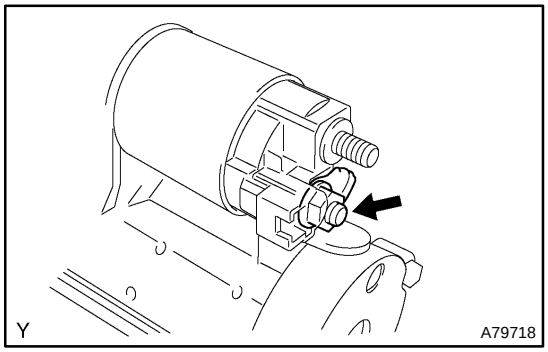

1. REMOVE MAGNETIC SWITCH ASSY

(a) Remove the nut and disconnect the lead wire from the magnetic switch.

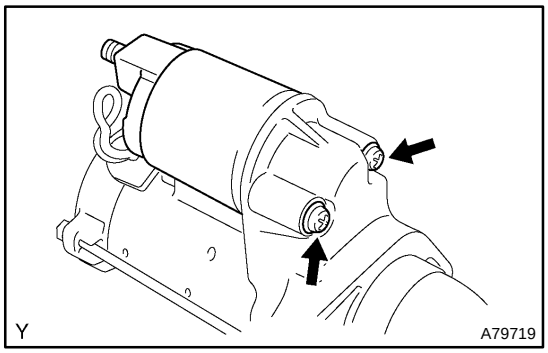

(b) Remove the 2 screws holding the magnetic switch to the starter drive housing.

(c) Remove the magnetic switch.

(d) Remove the return spring and plunger from starter drive housing.

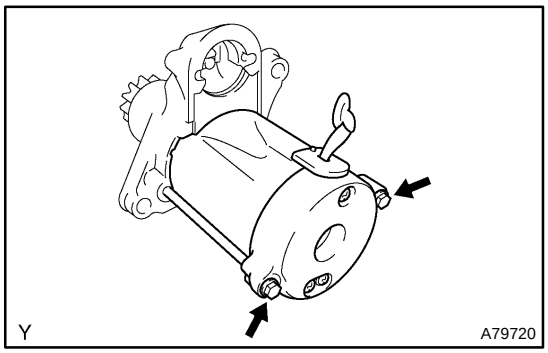

2. REMOVE STARTER FIELD FRAME ASSY

(a) Remove the 2 through−bolts, and pull out the field frame together with the commutator end frame assy.

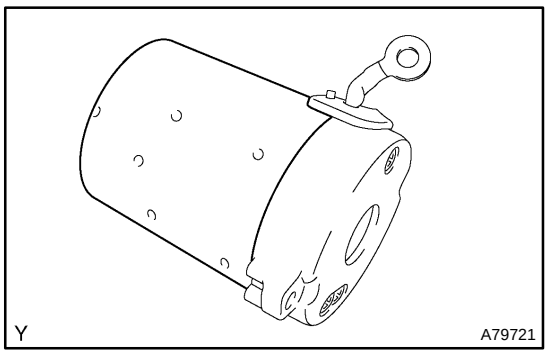

(b) Remove the field frame from the commutator end frame.

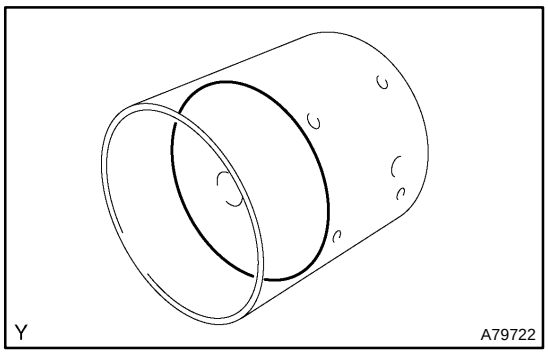

3. REMOVE STARTER AMATURE PLATE

(a) Remove the armature plate from the field frame.

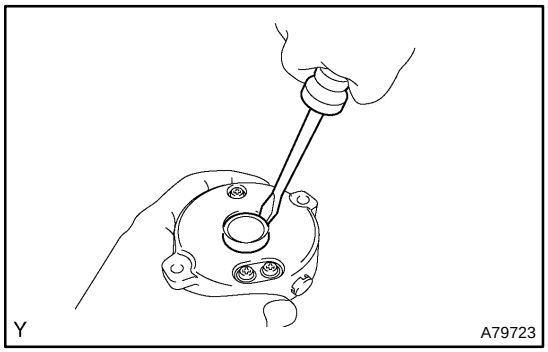

4. REMOVE STARTER COMMUTATOR END FRAME COVER

(a) Using a screwdriver, remove the commutator end frame cover.

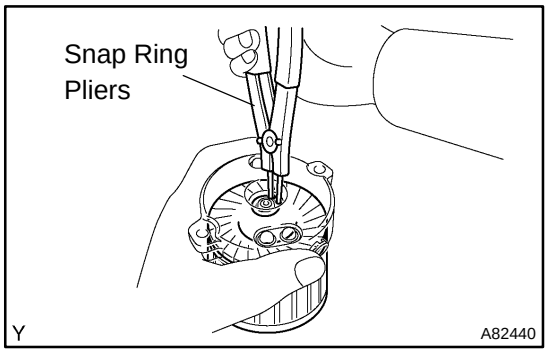

5. REMOVE STARTER ARMATURE ASSY

(a) Using snap ring pliers, remove the snap ring and plate washer.

(b) Remove the armature from the commutator end frame.

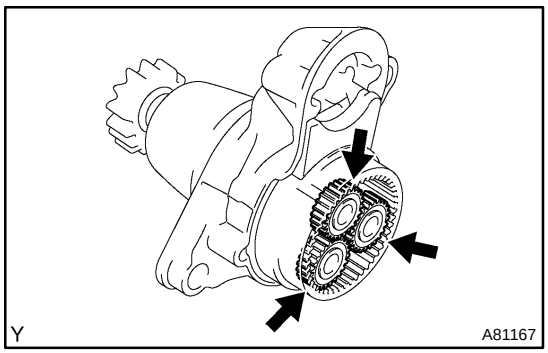

6. REMOVE PLANETARY GEAR

(a) Remove the 3 planetary gears from the starter drive housing assy.

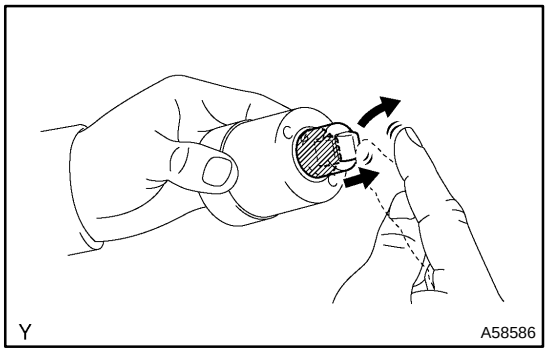

7. INSPECT MAGNETIC SWITCH ASSY

(a) Check the plunger.

(1) Push in the plunger and check that it returns quickly to its original position.

If necessary, replace the magnetic switch.

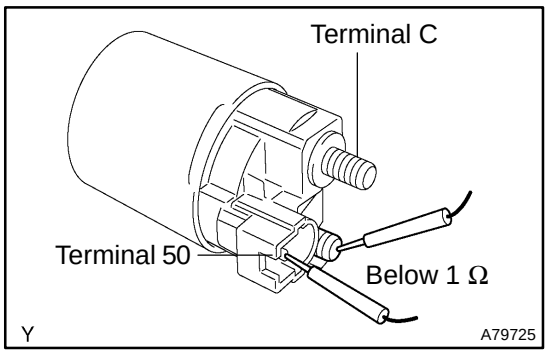

(b) Check if the pull−in coil has an open circuit.
(1) Check the resistance between terminals 50 and C.
Standard: Below 1 Ω

If the the result is not as specified, replace the magnetic switch.

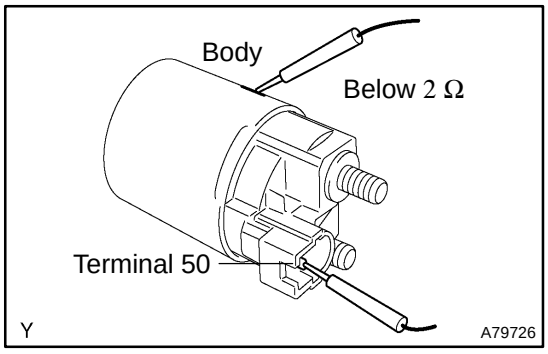

(c) Check if the hold−in coil has an open circuit.
(1) Check the resistance between terminal 50 and the switch body.
Standard: Below 2 Ω

If the the result is not as specified, replace the magnetic switch.

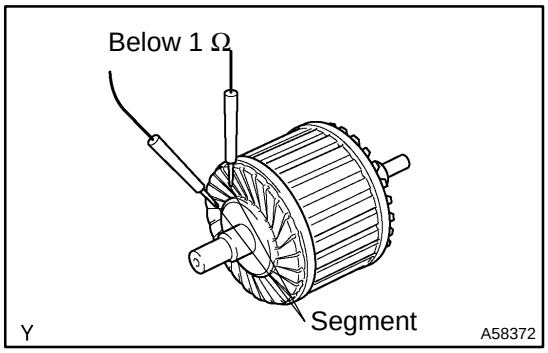

8. INSPECT STARTER ARMATURE ASSY

(a) Check if the commutator has an open circuit.
(1) Check the resistance between the segments of the commutator.
Standard: Below 1 Ω

If the result is not as specified, replace the armature assy.

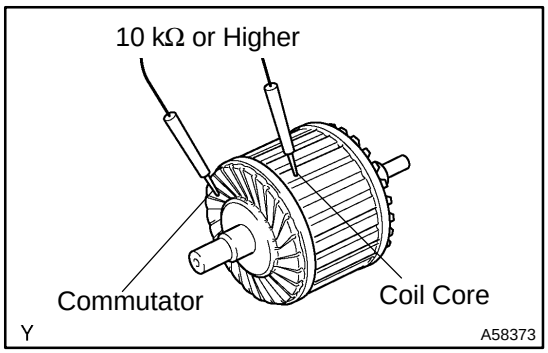

(b) Check if the commutator is grounded.
(1) Check the resistance between the commutator and armature coil core.
Standard: 10 kΩ or higher

If the result is not as specified, replace the armature assy.

(c) Check the commutator for contamination and burns on its surface.

If the surface is dirty or burnt, correct it with sandpaper (No.400) or a lathe.

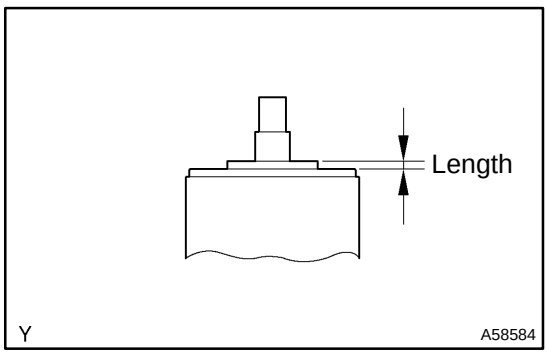

(d) Using a vernier caliper, measure the commutator's length.
Specified length: 3.1 to 3.8 mm (0.122 to 0.150 in.)

If the length is greater than the maximum, replace the starter armature.

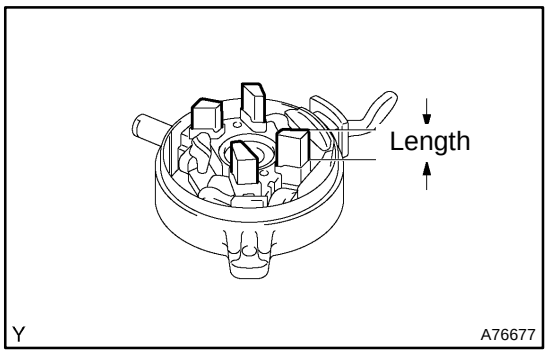

9. INSPECT STARTER COMMUTATOR END FRAME COVER

(a) Using a vernier caliper, measure the brush length.

Specified length: 4.0 to 9.0 mm (0.158 to 0.359 in.)

If the length is less than the minimum, replace the end frame assy.

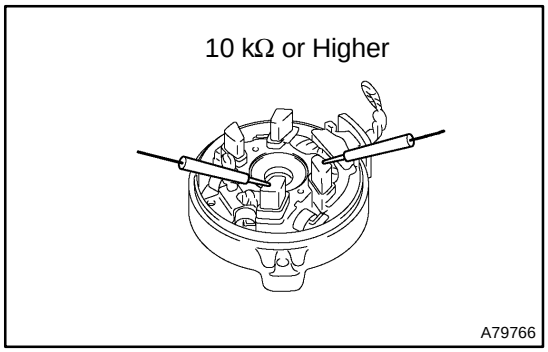

(b) Check the brush insulation.

(1) Check the resistance between the positive (+) and negative (−) brush.

Standard: 10 kΩ or higher

If the result is not as specified, repair or replace the end frame assy.

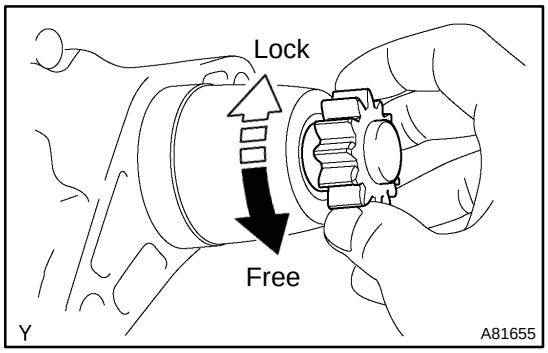

10. INSPECT AND ADJUST CLUTCH & BEARING CENTER

(a) Check the starter clutch.

(1) Rotate the clutch pinion gear counterclockwise and check that it turns freely. Try to rotate the clutch pinion gear clockwise and check that it locks.

If necessary, replace the clutch & bearing center.

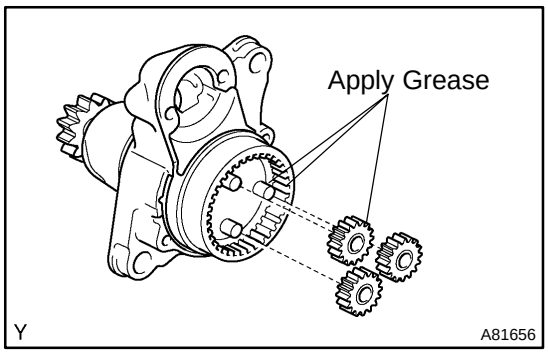

11. INSTALL PLANETARY GEAR

(a) Apply grease to the planet gears and pin parts of the planetary shaft.

(b) Install the 3 planetary gears.

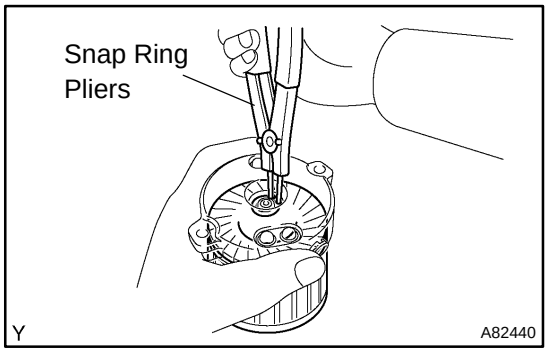

12. INSTALL STARTER ARMATURE ASSY

(a) Apply grease to the plate washer and the armature shaft.

(b) Install the starter armature to the starter commutator end frame.

(c) Using snap ring pliers, install the plate washer and a new snap ring.

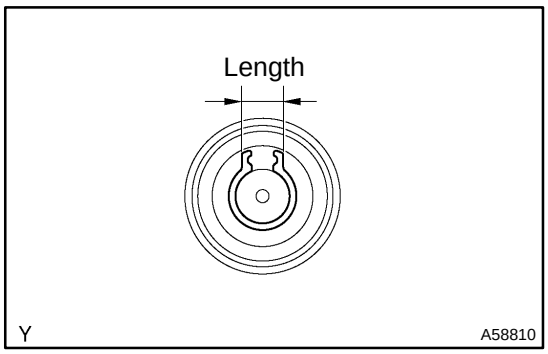

(d) Using a vernier caliper, measure length of the snap ring.
Maximum length: 5.0 mm (0.197 in.)

If the length is greater than the maximum, replace it with a new snap ring.

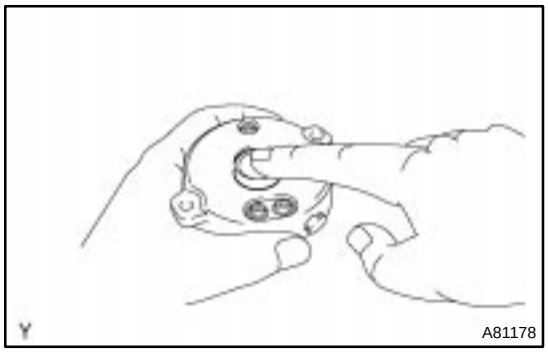

13. INSTALL STARTER COMMUTATOR END FRAME COVER

(a) Install the end frame cover to the commutator end frame.

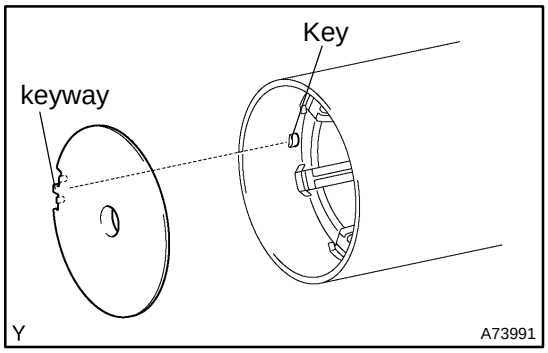

14. INSTALL STARTER AMATURE PLATE

(a) Insert the armature plate to the starter field frame.

(b) Align the keyway of the starter plate with the key inside the starter field frame, and install the starter plate.

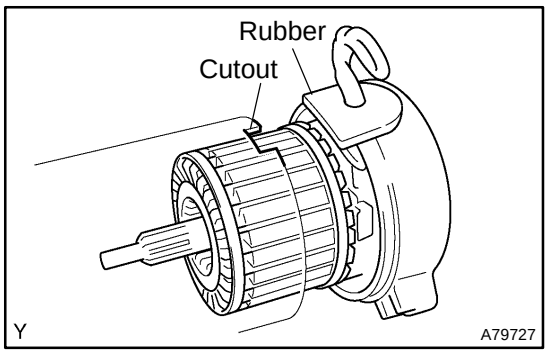

15. INSTALL STARTER COMMUTATOR END FRAME ASSY

(a) Align the rubber of the end frame with the cutout of the field frame.

(b) Install the end frame to the field frame.

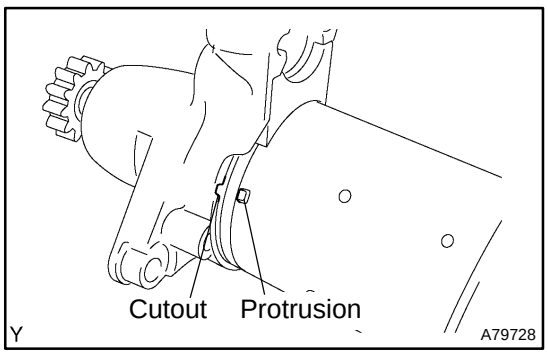

16. INSTALL STARTER FIELD FRAME ASSY

(a) Align the protrusion of the starter field frame with the cut out of the starter drive housing.

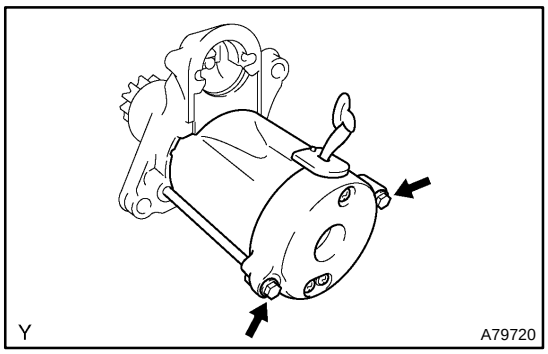

(b) Install the field frame with the 2 through bolts.
Torque: 6.0 N·m (61 kgf·cm, 53 in.·lbf)

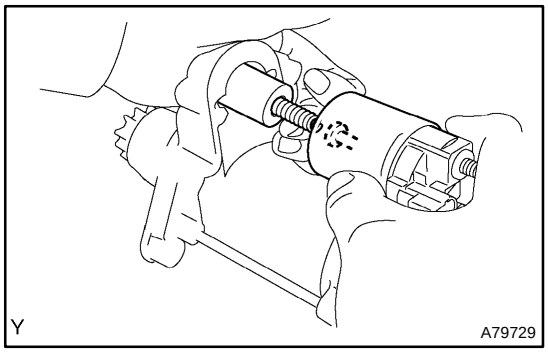

17. INSTALL MAGNETIC SWITCH ASSY
(a) Apply grease to the plunger and the hook.
(b) Hang the plunger hook of the magnetic switch to the drive lever.
(c) Install the plunger and the return spring.

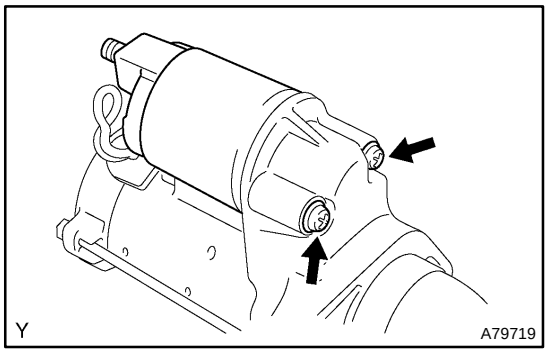

(d) Install the magnetic switch with the 2 screws.
Torque: 7.5 N·m (76 kgf·cm, 66 in.·lbf)

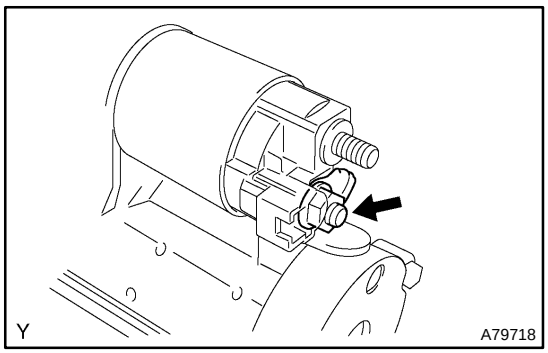

(e) Connect the lead wire to the magnetic switch with the nut.
Torque: 10 N·m (102 kgf·cm, 7 ft·lbf)

CHARGING SYSTEM (2AZ−FE)(From July, 2003)

1902O−05

PRECAUTION

CAUTION:

- **Check that the battery cables are connected to the correct terminals.**
- **Disconnect the battery cables when the battery is given a quick charge.**
- **Do not perform tests with a high voltage insulation resistance tester.**
- **Never disconnect the battery while the engine is running.**
- **Check that the charging cable is tightened on terminal B of the generator and the fuse box.**

190RZ−02

ON−VEHICLE INSPECTION

1. CHECK BATTERY CONDITION

(a) Check the battery for damage and deformation. If severe damage, deformation or leakage is found, replace the battery.

(b) Check the electrolyte quantity of each cell.

For batteries that are maintenance−free:

If the electrolyte quantity is below the recommended amount, replace the battery.

For batteries that are not maintenance−free:

If the electrolyte quantity is below the recommended amount, add distilled water.

CAUTION:

If the battery has gone flat or if the engine cannot be started easily, the engine may not be recovered properly. Recharge the battery and perform inspections again before returning the vehicle to the customer.

2. CHECK BATTERY TERMINALS, FUSIBLE LINK AND FUSES

(a) Check that the battery terminals are not loose or corroded.

If the terminals are corroded, clean the terminals.

(b) Check the fusible link, high−current fuses and fuses for continuity.

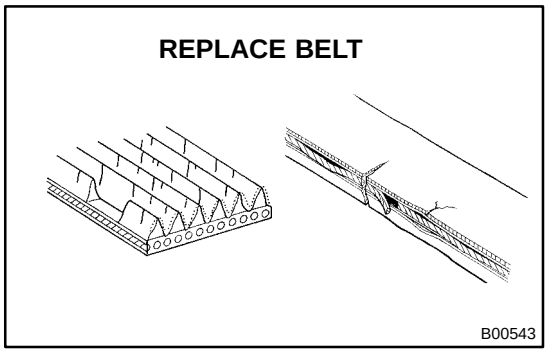

3. INSPECT DRIVE BELT

(a) Check the belt for wear, cracks and other signs of damage.

If any defect is found, replace the drive belt.

HINT:

Replace the drive belt if the following defects are found:

- If the belt has worn out until the wire can be seen.
- If the cracks reach the wire more than one place.
- If the belt has chunks missing from the ribs.

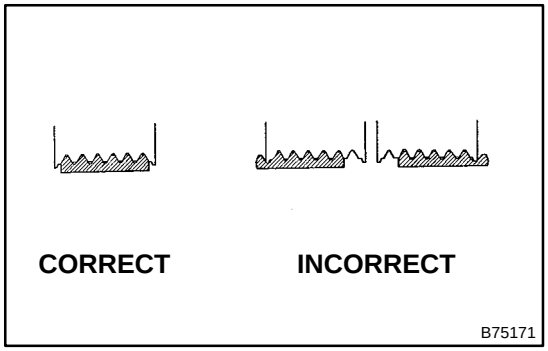

(b) Check that the belt fits properly in the ribbed grooves.

HINT:

With your hand, confirm that the belt has not slipped out of the groove on the bottom of the pulley.

4. VISUALLY CHECK GENERATOR WIRING

(a) Check that the wiring is in good condition.

5. LISTEN FOR ABNORMAL NOISES FROM GENERATOR

(a) Check that there is no abnormal noise from the generator while the engine is running.

6. INSPECT CHARGE WARNING LAMP CIRCUIT

(a) Turn the ignition switch ON. Check that the charge warning lamp turns on.

(b) Start the engine and check that the lamp turns off.

If the lamp does not operate as specified, troubleshoot the charge warning lamp circuit.

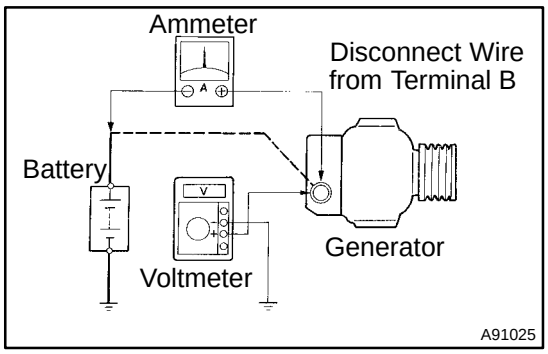

7. INSPECT CHARGING CIRCUIT WITHOUT LOAD

HINT:

If a battery/generator tester is available, connect the tester to the charging circuit according to the manufacturer's instructions.

(a) If a tester is not available, connect a voltmeter to the charging circuit as follows.
  (1) Disconnect the wire from terminal B of the generator and connect it to the negative (−) lead of the ammeter.
  (2) Connect the positive (+) lead of the ammeter to terminal B of the generator.
  (3) Connect the positive (+) lead of the voltmeter to terminal B of the generator.
  (4) Ground the negative (−) lead of the voltmeter.

(b) Check the charging circuit.
  (1) Keep the engine speed at 2,000 rpm, check the reading on the ammeter and voltmeter.

  Standard amperage: 10 A or less
  Standard voltage: 13.2 to 14.8 V

8. INSPECT CHARGING CIRCUIT WITH LOAD

(a) With the engine running at 2,000 rpm, turn on the high−beam headlamps and turn the heater blower switch to the HI position.

(b) Check the reading on the ammeter.

  Standard amperage: 30 A or more

HINT:

- If the ammeter reading is less than the standard amperage, repair the generator.
- If the battery is fully charged, the indication will sometims be less than the standard amperage.

GENERATOR ASSY (2AZ−FE)(From July, 2003)

190S0−02

COMPONENTS

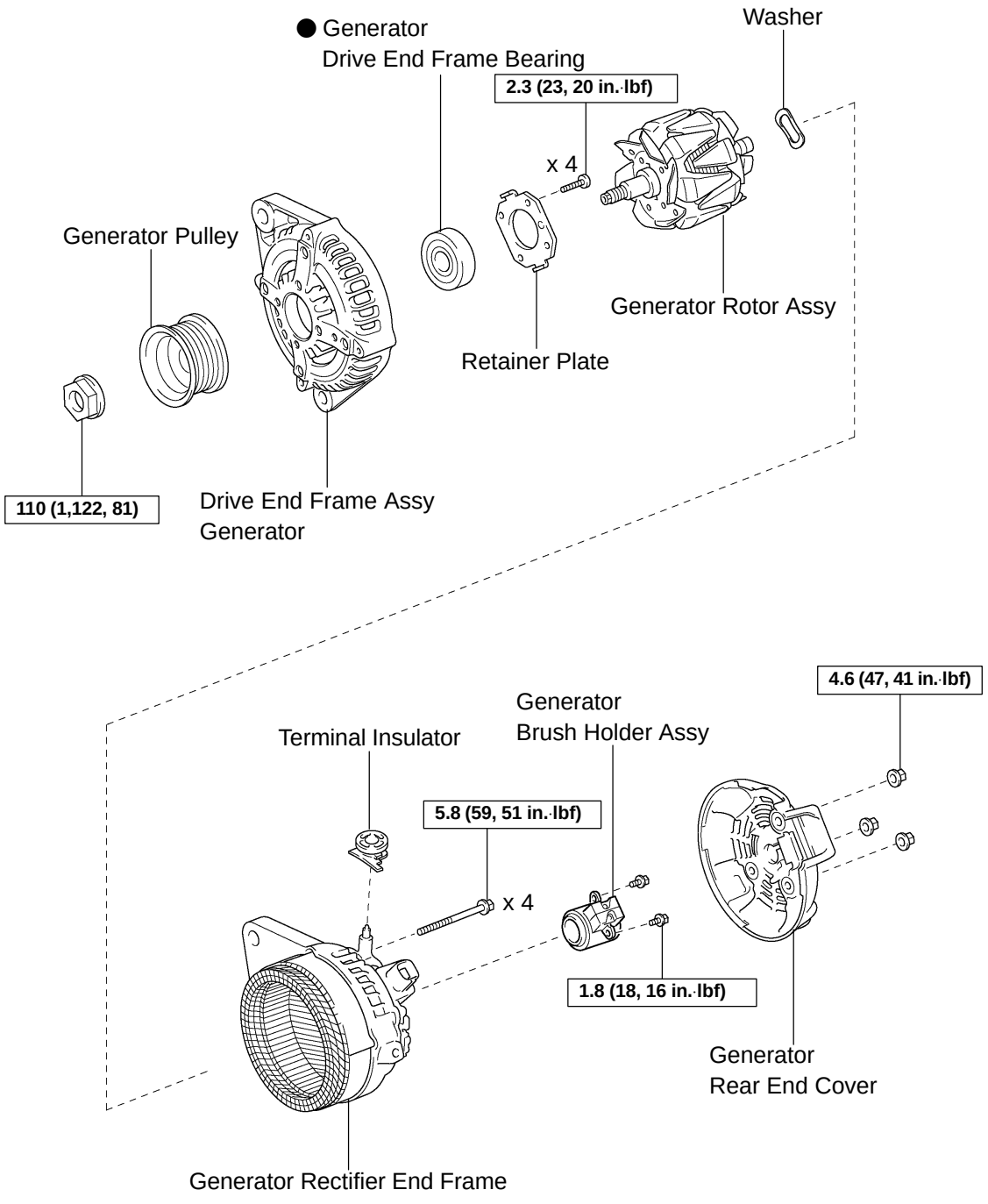

N·m (kgf·cm, ft·lbf) : Specified torque

● Non−reusable part

A90290

190S1−03

REPLACEMENT

1. REMOVE DRIVE BELT (See page 14−5)

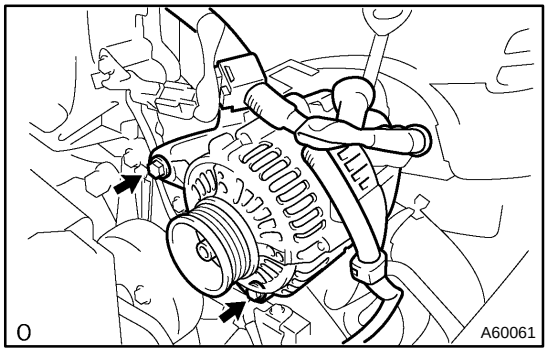

2. REMOVE GENERATOR ASSY

(a) Disconnect the engine wire as shown in the illustration.

(b) Remove the 2 bolts and generator.

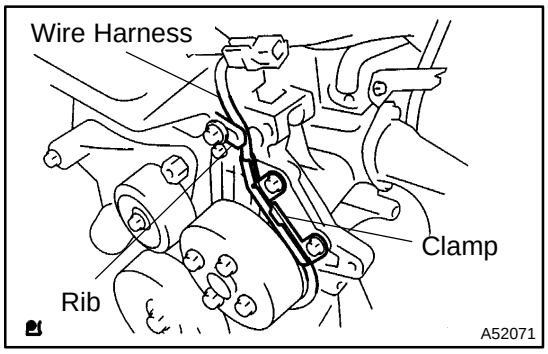

3. INSTALL GENERATOR ASSY

(a) Confirm that the wire harness of the crankshaft position sensor is placed as shown in the illustration.

(b) Install the generator.

Torque:
21 N·m (214 kgf·cm, 15 ft·lbf) for M8
52 N·m (530 kgf·cm, 38 ft·lbf) for M10
9 N·m (92 kgf·cm, 80 in.·lbf) for wiring harness clamp
9.8 N·m (100 kgf·cm, 7 ft·lbf) for generator wire

NOTICE:
Be careful not to put the wire harness in when install the generator.

4. INSTALL DRIVE BELT (See page 14−5)

5. INSPECT DRIVE BELT (See page 19−14)

190S2−02

OVERHAUL

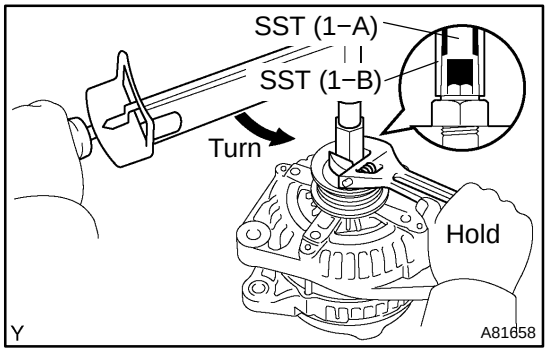

1. REMOVE GENERATOR PULLEY

SST 09820−63010 (09820−06010, 09820−06020)

HINT:

SST (1−A, B)	09820−06010
SST (2)	09820−06020

(a) Hold SST (1−A) with a torque wrench, and tighten SST (1−B) clockwise to the specified torque.

Torque: 39 N·m (400 kgf·cm, 29 ft·lbf)

NOTICE:

Check that SST is secured to the rotor shaft.

(b) Clamp SST (2) in a vise.

(c) Insert SST (1−A, B) into SST (2), and attach the pulley nut to SST (2).

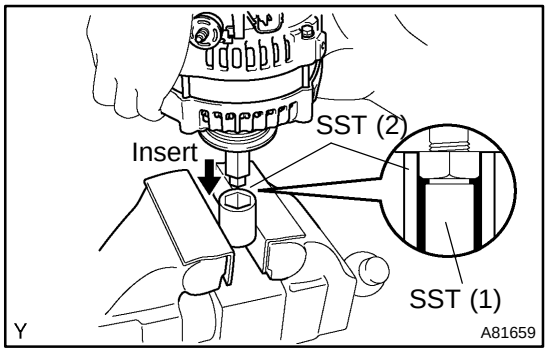

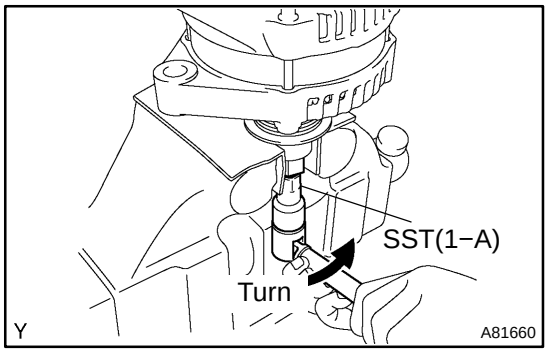

(d) To loosen the pulley nut, turn SST (1−A) in the direction shown in the illustration.

NOTICE:

To prevent damage to the rotor shaft, do not loosen the pulley nut more than one−half turn.

(e) Remove the generator from SST (2).

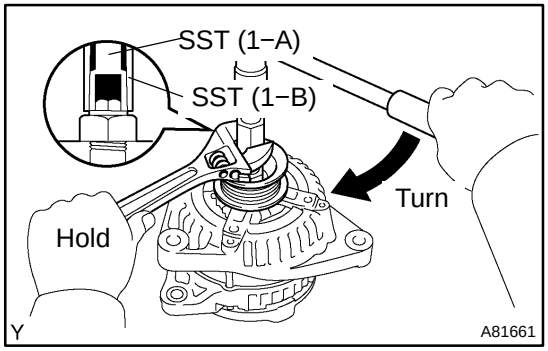

(f) Turn SST (1−B) and remove SST (1−A, B).

(g) Remove the pulley nut and generator pulley.

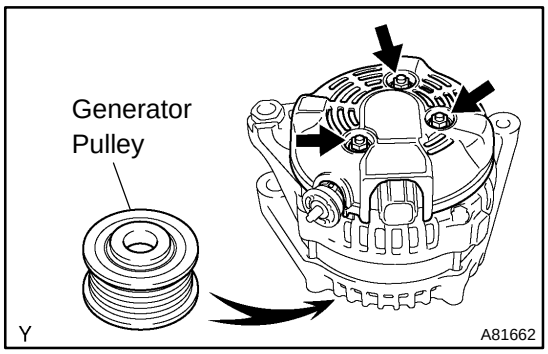

2. REMOVE GENERATOR REAR END COVER

(a) Place the generator on the generator pulley.

(b) Remove the 3 nuts and the generator rear end cover.

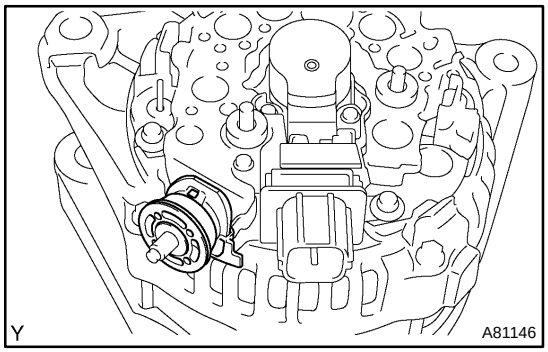

3. REMOVE TERMINAL INSULATOR

(a) Remove the terminal insulator from the generator rectifier end frame.

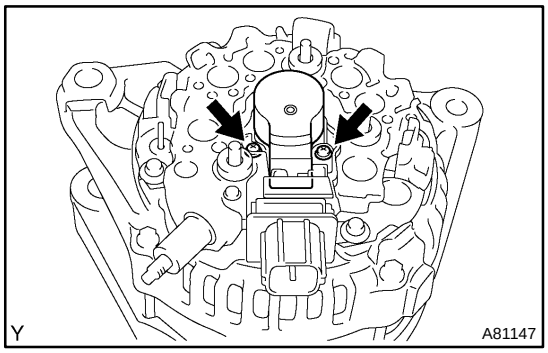

4. REMOVE GENERATOR BRUSH HOLDER ASSY

(a) Remove the 2 screws and the generator brush holder.

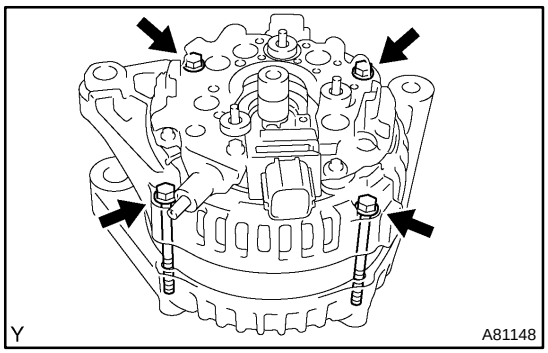

5. REMOVE GENERATOR COIL ASSY

(a) Remove the 4 bolts.

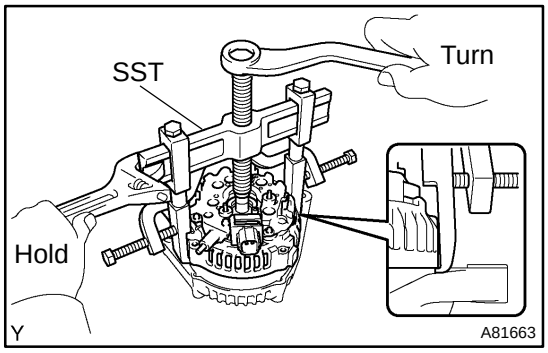

(b) Using SST, remove the generator rectifier end frame.

SST 09950−40011 (09951−04020, 09952−04010, 09953−04020, 09954−04010, 09955−04071, 09957−04010, 09958−04011)

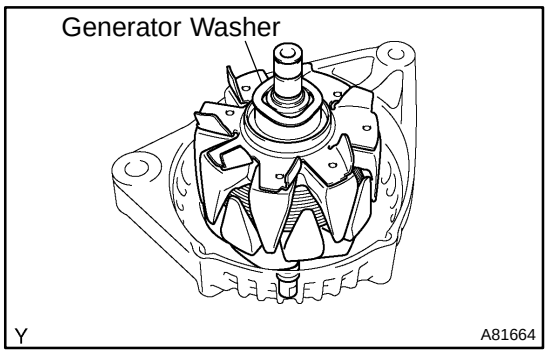

6. REMOVE GENERATOR ROTOR ASSY

(a) Remove the generator washer and the generator rotor.

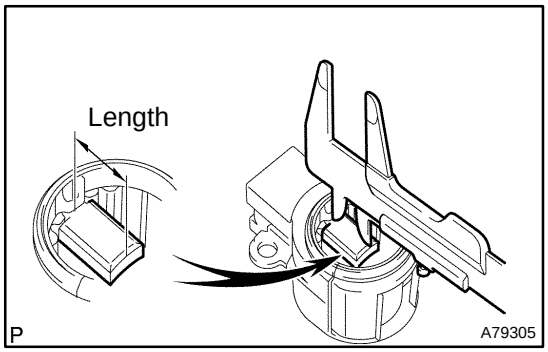

7. INSPECT GENERATOR BRUSH HOLDER ASSY

(a) Check the brush length.

(1) Using a vernier caliper, measure the exposed brush length.

Specified brush length: 4.5 to10.5 mm (0.177 to 0.413 in.)

If the exposed brush length is less than minimum, replace the generator brush holder.

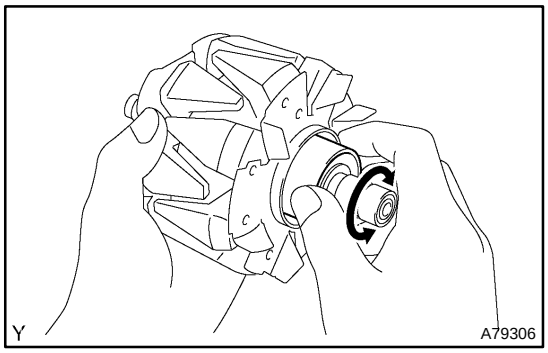

8. INSPECT GENERATOR ROTOR ASSY

(a) Check the bearing is not rough or worn.

If necessary, replace the generator rotor.

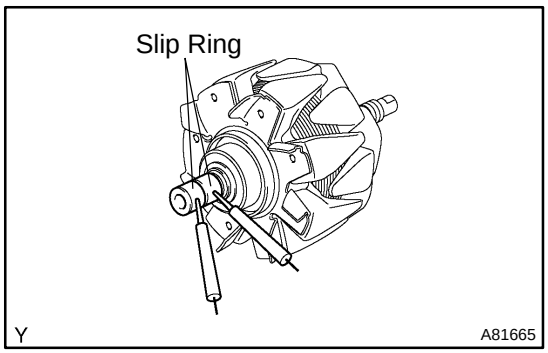

(b) Check the rotor for open circuit.

(1) Using an ohmmeter, measure the resistance between the slip ring.

Standard: 2.3 to 2.7 Ω at 20°C (68°F)

If the resistance is not as specified, replace the generator rotor.

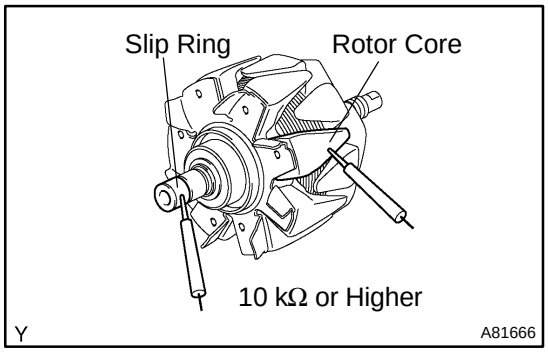

(c) Check the rotor for ground.

(1) Using an ohmmeter, check the resistance between the slip ring and the rotor core.

Standard: 10 kΩ or higher

If the resistance is not as specified, replace the generator rotor.

(d) Inspect slip rings.

(1) Check that the slip rings are not rough or scored.

If rough or scored, replace the generator rotor.

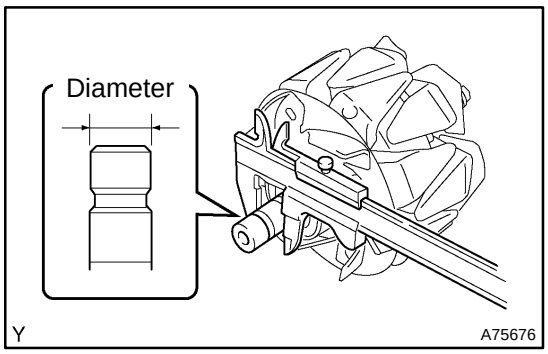

(e) Check the slip ring diameter.
(1) Using a vernier caliper, measure the slip ring diameter.
Specified diameter: 14.0 to 14.4 mm (0.551 to 0.567 in.)

If the diameter is less than minimum, replace the generator rotor.

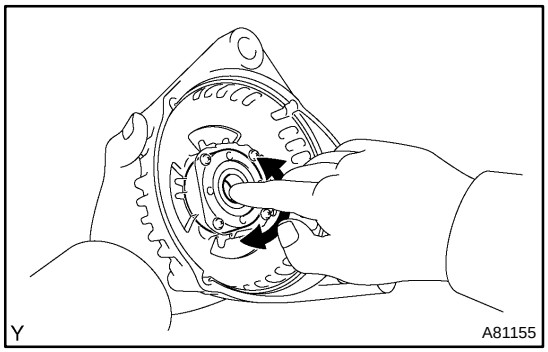

9. INSPECT GENERATOR DRIVE END FRAME BEARING

(a) Check the bearing is not rough or worn.

If necessary, replace the bearing.

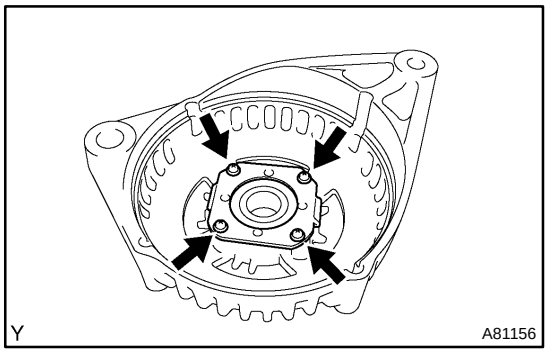

10. REMOVE GENERATOR DRIVE END FRAME BEARING

(a) Remove the 4 screws and the retainer plate.

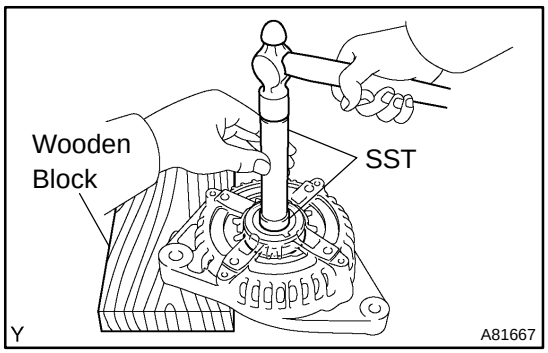

(b) Using SST, tap out the bearing.
SST 09950−60010 (09951−00250), 09950−70010 (09951−07100)

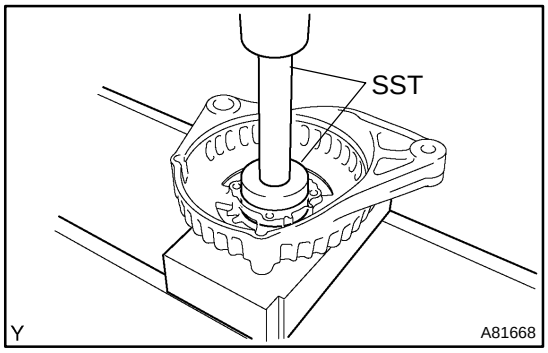

11. INSTALL GENERATOR DRIVE END FRAME BEARING

(a) Using SST and a press, press in a new bearing.
SST 09950−60010 (09951−00470), 09950−70010 (09951−07100)

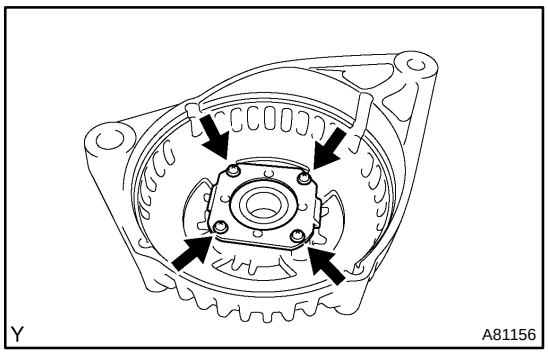

(b) Install the retainer plate with the 4 screws.
Torque: 2.3 N·m (23 kgf·cm, 20 in.·lbf)

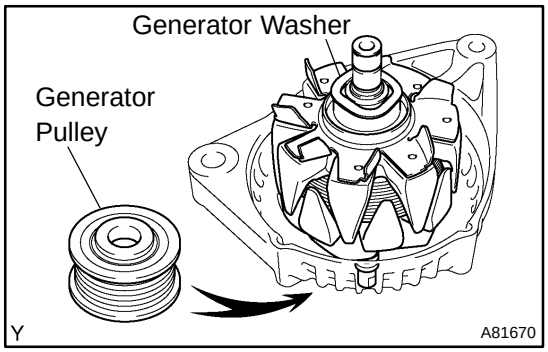

12. INSTALL GENERATOR ROTOR ASSY

(a) Place the generator drive end frame on the generator pulley.

(b) Install the generator rotor and the generator washer.

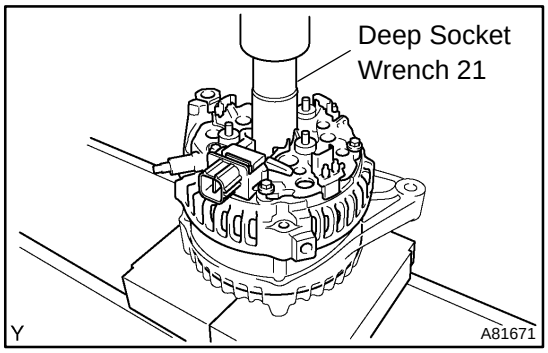

13. INSTALL GENERATOR COIL ASSY

(a) Using a deep socket wrench 21 and a press, press in the generator rectifier end frame carefully.

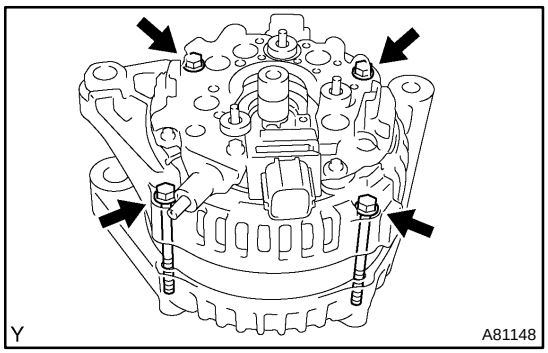

(b) Tighten the 4 bolts.
Torque: 5.8 N·m (59 kgf·cm, 51 in.·lbf)

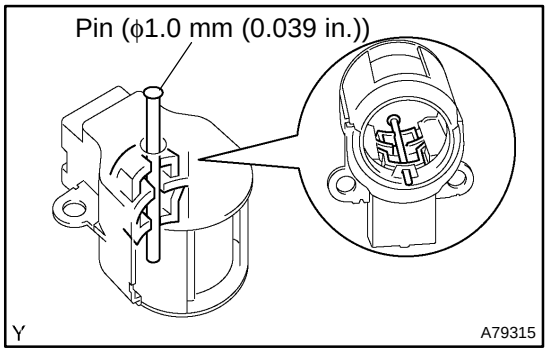

14. INSTALL GENERATOR BRUSH HOLDER ASSY

(a) While pushing the 2 brushes to inside the brush holder, insert a pin (ϕ1.0 mm (0.039 in.)) into the brush holder hole.

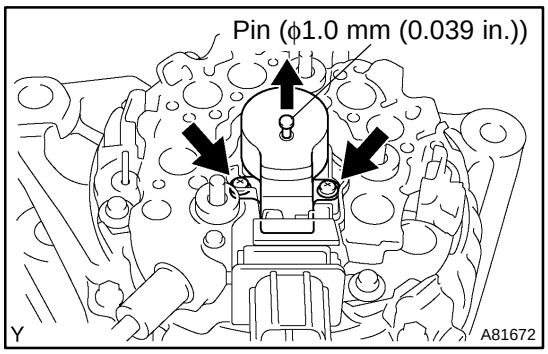

(b) Install the generator brush holder with the 2 screws.
Torque: 1.8 N·m (18 kgf·cm, 16 in.·lbf)

(c) Pull out the pin (ϕ1.0 mm (0.039 in.)) from the generator brush holder.

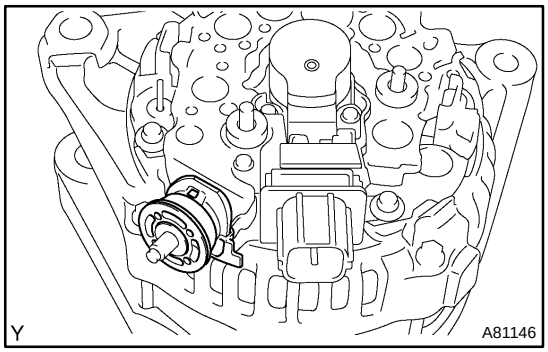

15. INSTALL TERMINAL INSULATOR

(a) Install the terminal insulator to the generator rectifier end frame.

NOTICE:

Pay attention the mounting orientation of the terminal insulator.

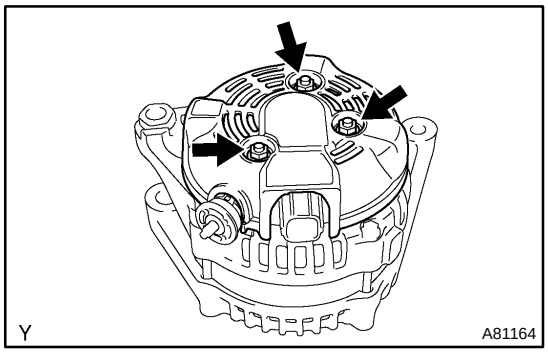

16. INSTALL GENERATOR REAR END COVER

(a) Install the generator rear end cover with the 3 nuts.
Torque: 4.6 N·m (47 kgf·cm, 41 in.·lbf)

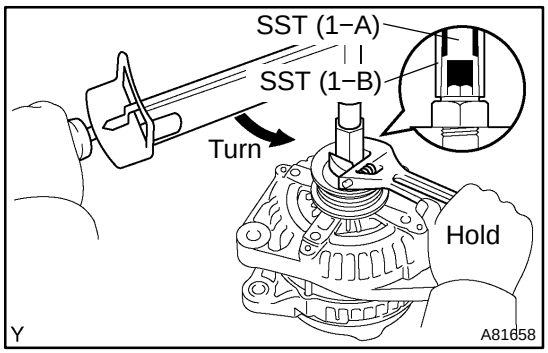

17. INSTALL GENERATOR PULLEY

SST 09820−63010 (09820−06010, 09820−06020)

HINT:

SST (1−A, B)	09820−06010
SST (2)	09820−06020

(a) Install the generator pulley to the rotor shaft by tightening the pulley nut by hand.

(b) Hold SST (1−A) with a torque wrench, and tighten SST (1−B) clockwise to the specified torque.
Torque: 39 N·m (400 kgf·cm, 29 ft·lbf)

NOTICE:

Check that SST is secured to the rotor shaft.

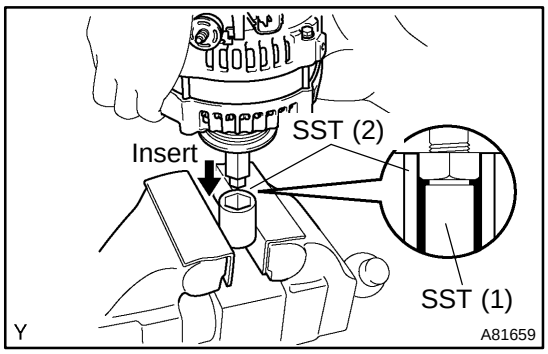

(c) Clamp SST 2 in a vise.
(d) Insert SST (1−A, B) into SST (2), and attach the pulley nut to SST (2)

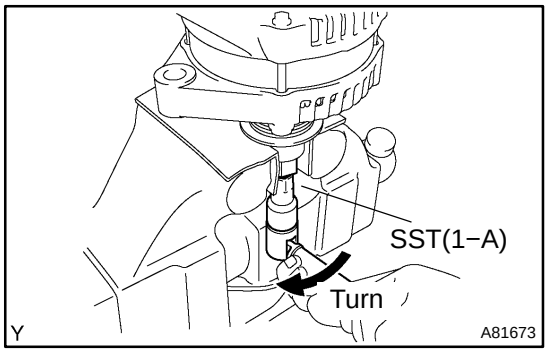

(e) Tighten the pulley nut by turning SST (1−A) in the direction shown in the illustration.
Torque: 111 N·m (1,125 kgf·cm, 81 ft·lbf)
(f) Remove the generator from SST (2).

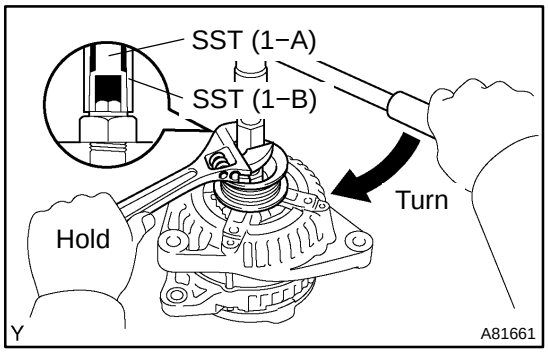

(g) Turn SST (1−B), and remove SST (1−A, B).
(h) Turn the generator pulley and check that the generator pulley moves smoothly.

STARTING SYSTEM (1MZ−FE/3MZ−FE)

190S5−02

INSPECTION

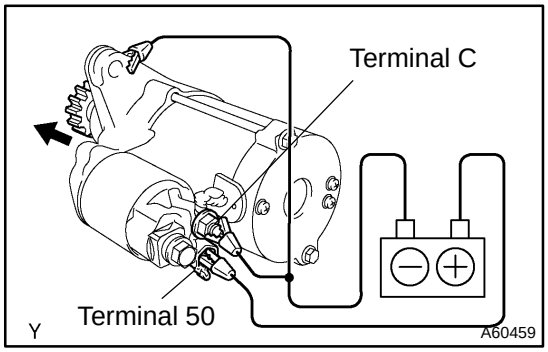

1. INSPECT STARTER ASSY

NOTICE:

These tests must be performed within 3 to 5 seconds to avoid burning out the coil.

(a) Do the pull−in test.

(1) Disconnect the lead wire from terminal C.

(2) Connect the battery to the magnetic switch as shown in the illustration on the left. Check that the clutch pinion gear extends.

If the clutch pinion gear does not move, replace the magnetic switch.

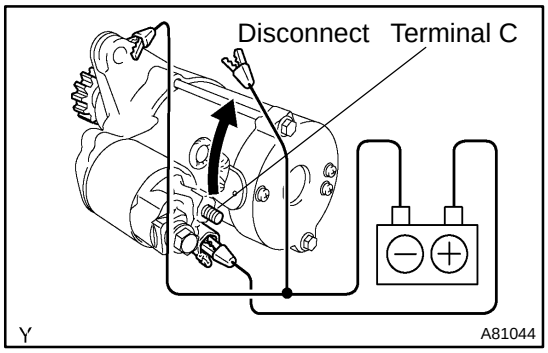

(b) Do the hold−in test.

(1) Maintain the battery connections in step (a), but disconnect the negative (−) lead from terminal C. Check that the pinion gear remains extended.

If the clutch pinion gear returns inward, replace the magnetic switch.

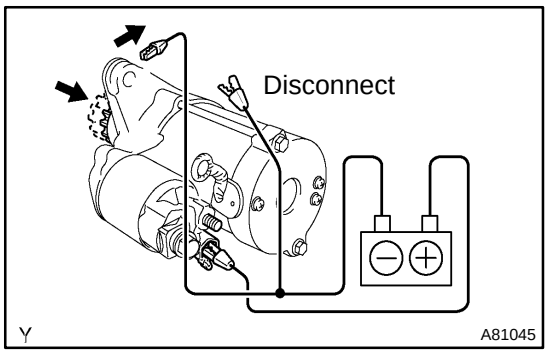

(c) Check the clutch pinion gear return.

(1) Disconnect the negative (−) lead from the switch body. Check that the clutch pinion gear returns.

If the clutch pinion gear does not return, replace the magnetic switch.

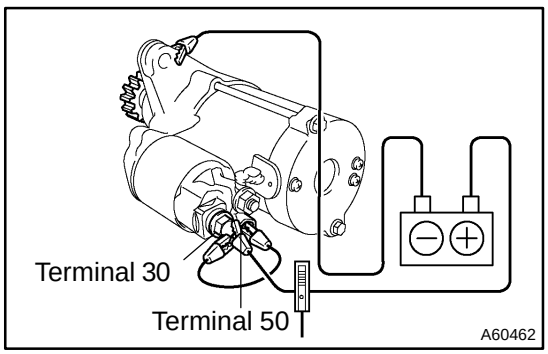

(d) Do the no−load performance test.

(1) Connect the lead wire to terminal C. Make sure that the lead is not grounded.

(2) Clamp the starter in a vise.

(3) Connect the battery and an ammeter to the starter as shown in the illustration.

(4) Check that the starter rotates smoothly and steadily with the clutch pinion gear extended. Check that the ammeter reads the specified current.

Specified current: 90 A or less at 11.5 V

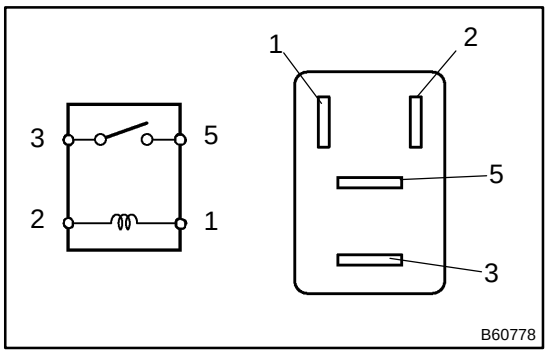

2. INSPECT STARTER RELAY ASSY

(a) Check the resistance of the ST relay.

Standard:

Tester Connection	Specified Condition
3 − 5	10 kΩ or higher
3 − 5	Below 1Ω (when battery voltage is applied to terminals 1 and 2)

If the result is not as specified, replace the relay.

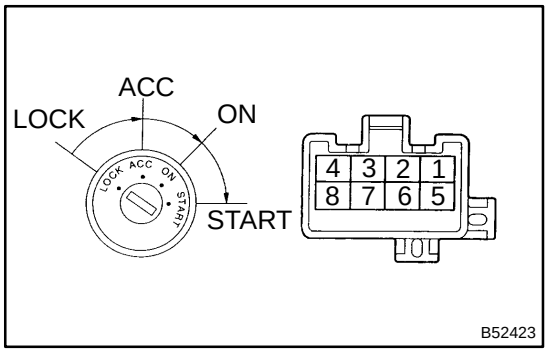

3. INSPECT IGNITION OR STARTER SWITCH ASSY

(a) Inspect the switch resistance.

Standard:

Tester Connection	Switch Condition	Specified Condition
−	LOCK	10 kΩ or higher
2 − 3	ACC	Below 1 Ω
2 − 3 2 − 4 6 − 7	ON	Below 1 Ω
1 − 2 1 − 4 6 − 7 6 − 8	START	Below 1 Ω

If the result is not as specified, replace the switch assy.

IGNITION OR STARTER SWITCH ASSY (1MZ−FE/3MZ−FE)

190SQ−03

REPLACEMENT

The installation procedures are the removal procedures in reverse order.

1. REMOVE DISCONNECT BATTERY NEGATIVE TERMINAL

2. REMOVE INSTRUMENT PANEL SUB−ASSY UPPER (See page 71−16)

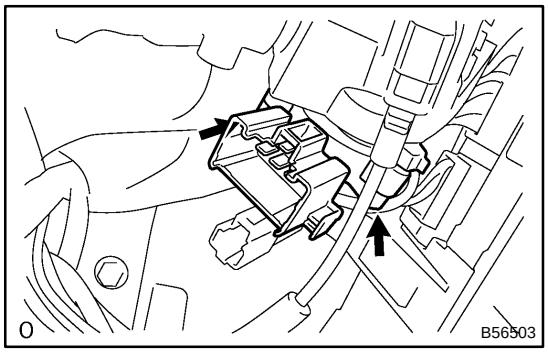

3. REMOVE IGNITION OR STARTER SWITCH ASSY

(a) Disconnect the ignition switch connector and unlock warning switch connector.

(b) Remove the clamp.

(c) Remove the 2 screws and ignition switch.

STARTER ASSY (1MZ−FE/3MZ−FE)

190S7−02

COMPONENTS

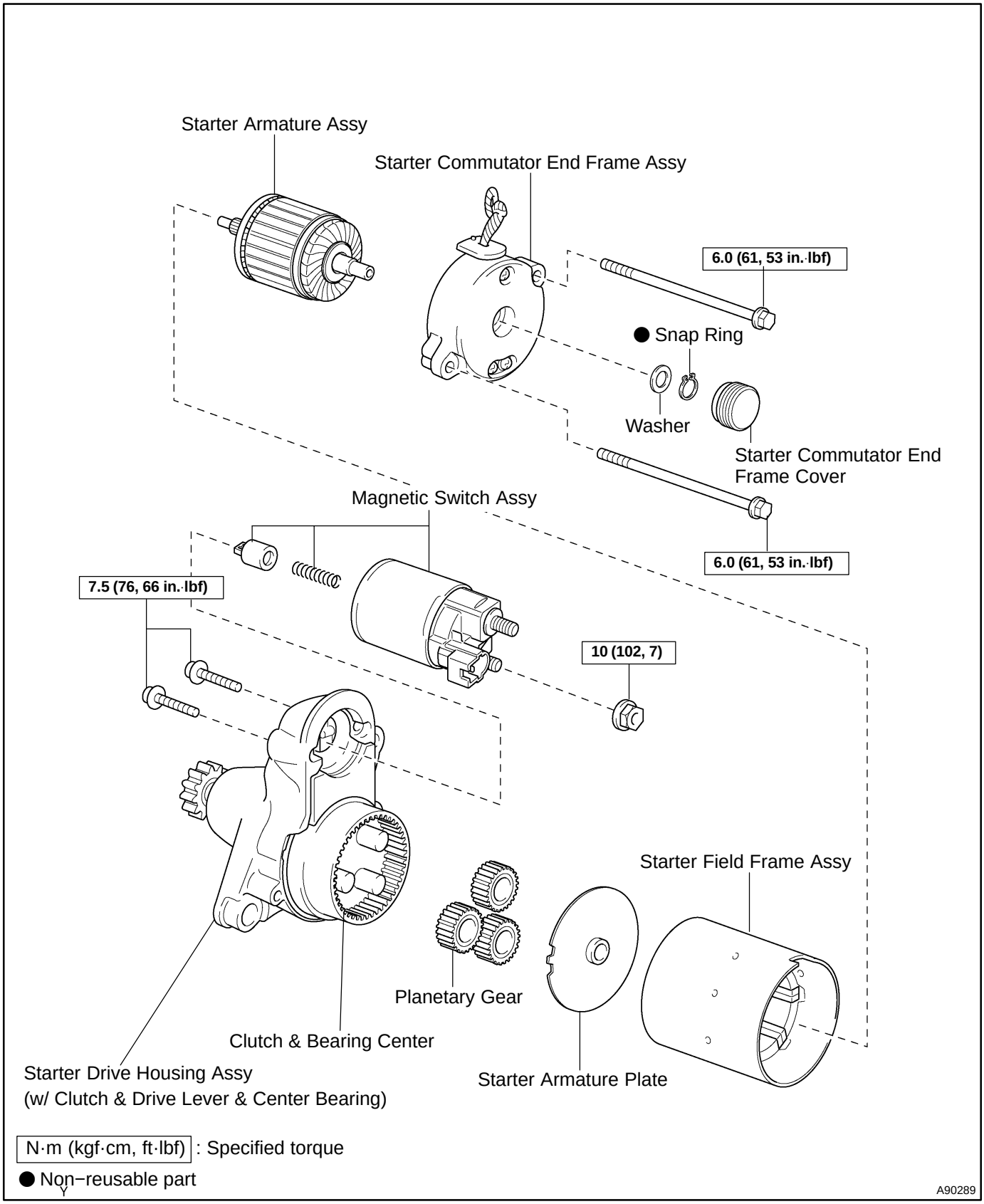

190O8−03

REPLACEMENT

NOTICE:

Before changing the starter, check these items again:

- **Connector connection**
- **Accessory installation**

1. REMOVE BATTERY

2. REMOVE BATTERY TRAY

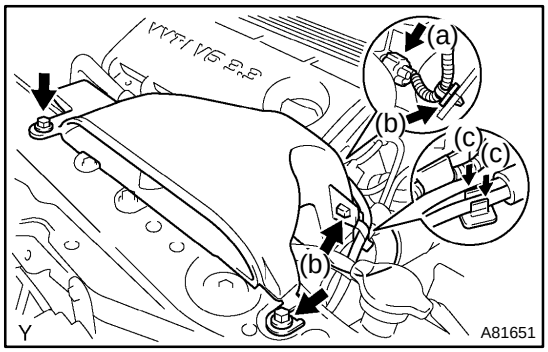

3. REMOVE AIR CLEANER INLET ASSY

(a) Disconnect the VSV connector.
(b) Remove the 2 wire harness clamps.
(c) Remove the vacuum hoses from the hose clamp.
(d) Remove the 2 bolts and air cleaner inlet.

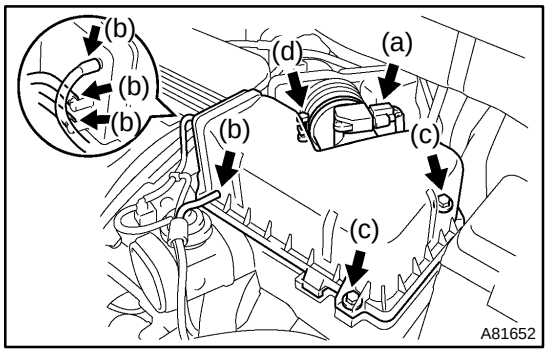

4. REMOVE AIR CLEANER ASSY

(a) Disconnect the MAF meter connector.
(b) Disconnect the 4 vacuum hoses.
(c) Loosen the 2 air cleaner cap bolts.
(d) Loosen the air cleaner hose clamp bolt and remove the air cleaner cap.
(e) Remove the air cleaner filter element.

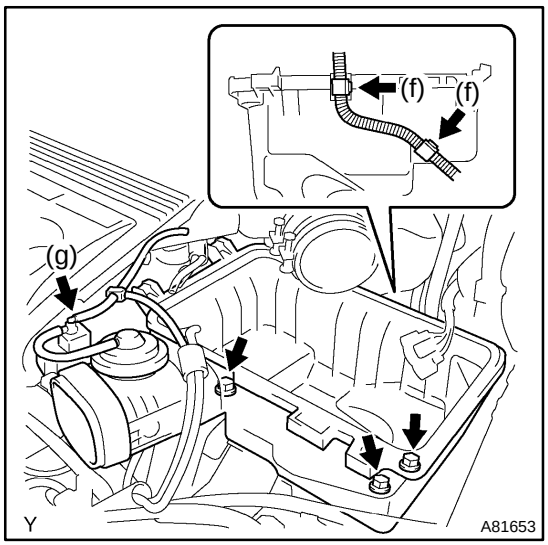

(f) Remove the wire harness from the 2 wire harness clamps.
(g) Disconnect the vacuum hose.
(h) Remove the 3 bolts and air cleaner case.

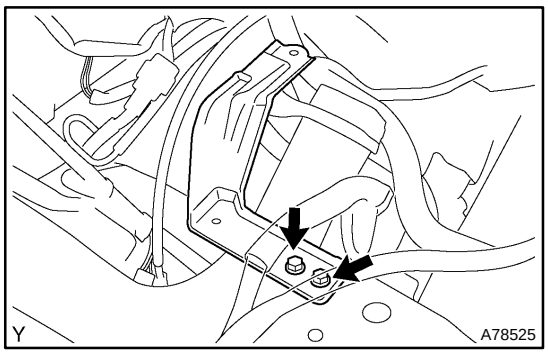

5. REMOVE AIR CLEANER BRACKET

(a) Remove the 2 bolts and air cleaner bracket.

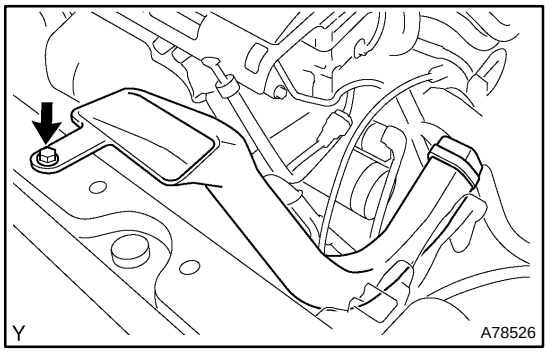

6. REMOVE AIR CLEANER INLET NO.1

(a) Remove the bolt and cleaner inlet.

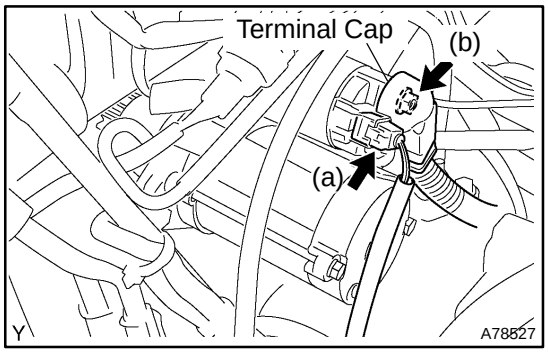

7. REMOVE STARTER ASSY

(a) Disconnect the starter connector.

(b) Open the terminal cap, and remove the nut and disconnect the starter wire.

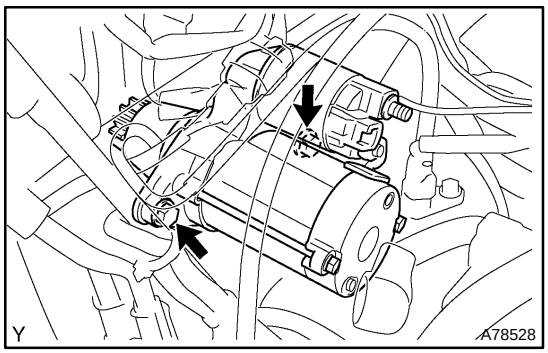

(c) Remove the 2 bolts and starter.

8. INSTALL STARTER ASSY

(a) Install the starter with the 2 bolts.

Torque: 37 N·m (380 kgf·cm, 26 ft·lbf) for bolt

(b) Connect the starter wire.

(c) Install the terminal nut and cover the nut with the cap.

Torque: 9.8 N·m (100 kgf·cm, 7 ft·lbf) for nut

9. INSTALL AIR CLEANER INLET NO.1

(a) Install the cleaner inlet with the bolt.

Torque: 7.0 N·m (71 kgf·cm, 62 in.·lbf)

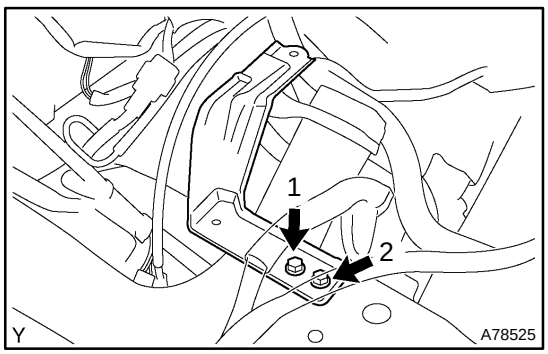

10. INSTALL AIR CLEANER BRACKET

(a) Install the air cleaner bracket with the 2 bolts. Tighten the 2 bolts little by little in the numerical order shown in the illustration.

Torque: 12 N·m (122 kgf·cm, 9 ft·lbf)

NOTICE:

Fully tightening each bolt one by one may damage the air cleaner bracket and bolts.

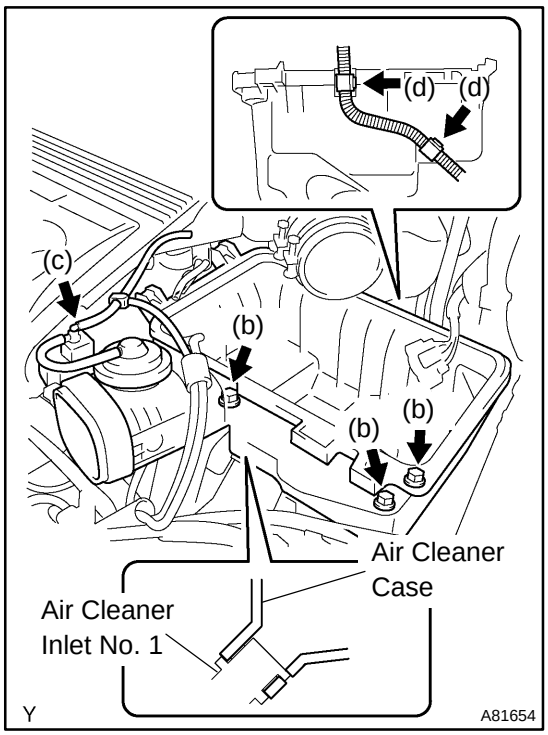

11. INSTALL AIR CLEANER ASSY

(a) Install the air cleaner case to the air cleaner inlet No. 1, as shown in the illustration.

(b) Tighten the 3 bolts little by little in the numerical order shown in the illustration.
Torque: 5.0 N·m (51 kgf·cm, 44 in.·lbf)

NOTICE:

Fully tightening each bolt one by one may damage the air cleaner case and bolts.

(c) Connect the vacuum hose.

(d) Install the 2 wire harness clamps.

(e) Install the air cleaner filter element.

(f) Connect the air cleaner hose No. 1 and tighten the air cleaner hose clamp bolt.

(g) Tighten the 2 air cleaner cap bolts.
Torque: 5.0 N·m (51 kgf·cm, 44 in.·lbf)

(h) Connect the 4 vacuum hoses.

(i) Connect the MAF meter connector.

12. INSTALL AIR CLEANER INLET ASSY
Torque: 7.0 N·m (71 kgf·cm, 62 in.·lbf)

13. CHECK CONNECTION OF VACUUM HOSE

14. INSTALL BATTERY TRAY

15. INSTALL BATTERY

(a) Install the battery clamp with the bolt and nut.
Torque: 5.5 N·m (56 kgf·cm, 49 in·lbf)

(b) Connect the wires to the battery terminals.
Torque: 3.5 N·m (36 kgf·cm, 31 in.·lbf)

190O9−03

OVERHAUL

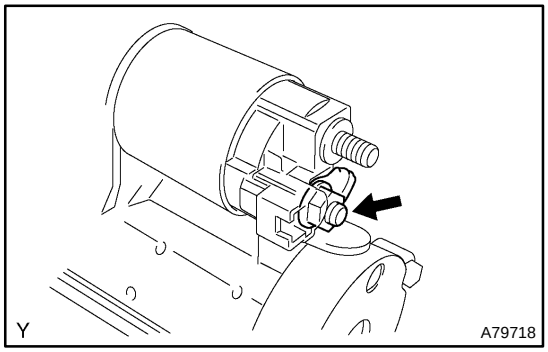

1. REMOVE MAGNETIC SWITCH ASSY

(a) Remove the nut and disconnect the lead wire from the magnetic switch.

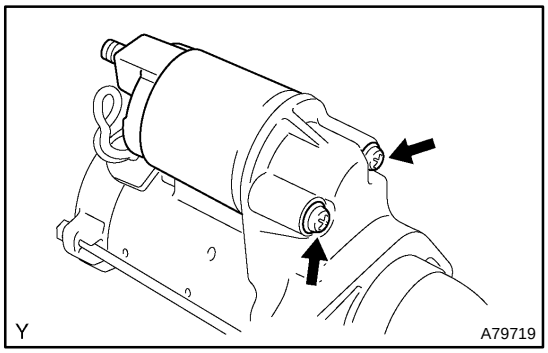

(b) Remove the 2 screws holding the magnetic switch to the starter drive housing.

(c) Remove the magnetic switch.

(d) Remove the return spring and plunger from starter drive housing.

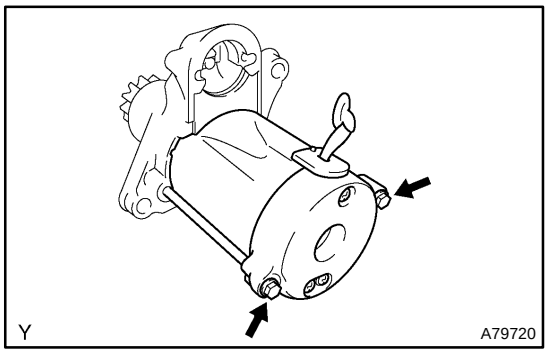

2. REMOVE STARTER FIELD FRAME ASSY

(a) Remove the 2 through−bolts, and pull out the field frame together with the commutator end frame assy.

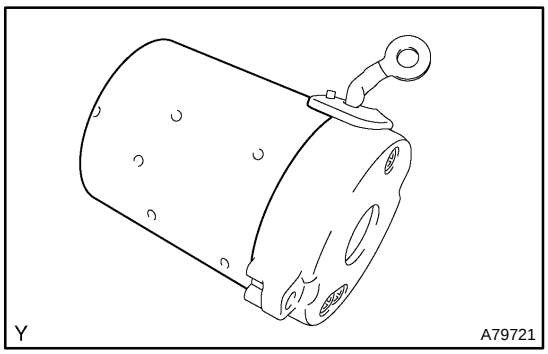

(b) Remove the field frame from the commutator end frame.

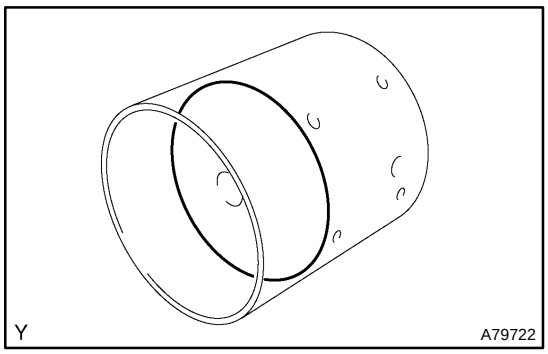

3. REMOVE STARTER AMATURE PLATE

(a) Remove the armature plate from the field frame.

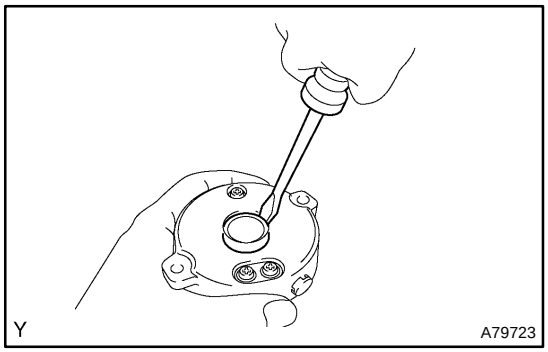

4. REMOVE STARTER COMMUTATOR END FRAME COVER

(a) Using a screwdriver, remove the commutator end frame cover.

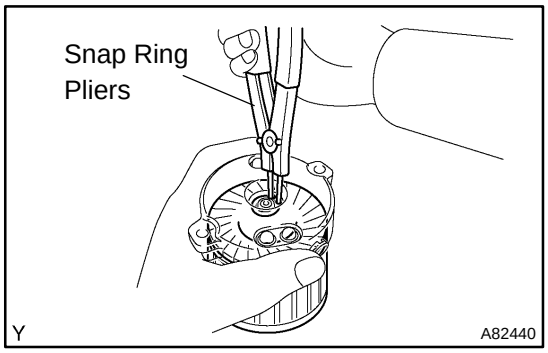

5. REMOVE STARTER ARMATURE ASSY

(a) Using snap ring pliers, remove the snap ring and plate washer.

(b) Remove the armature from the commutator end frame.

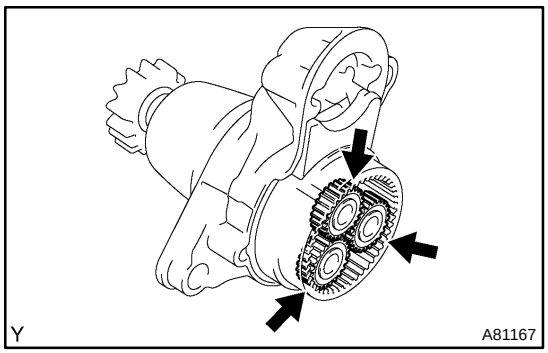

6. REMOVE PLANET GEAR

(a) Remove the 3 planetary gears from the starter drive housing assy.

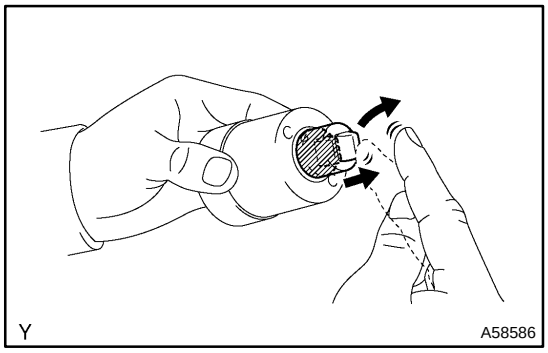

7. INSPECT MAGNETIC SWITCH ASSY

(a) Check the plunger.

(1) Push in the plunger and check that it returns quickly to its original position.

If necessary, replace the magnetic switch.

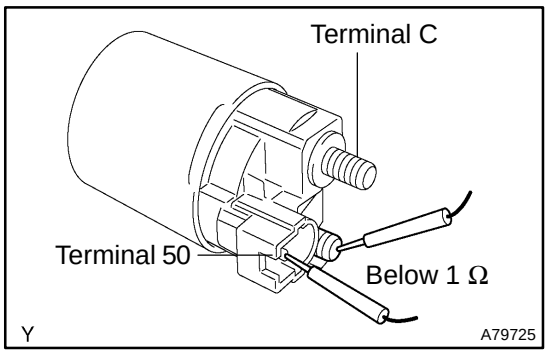

(b) Check if the pull−in coil has an open circuit.
(1) Check the resistance between terminals 50 and C.
Standard: Below 1 Ω

If the the result is not as specified, replace the magnetic switch.

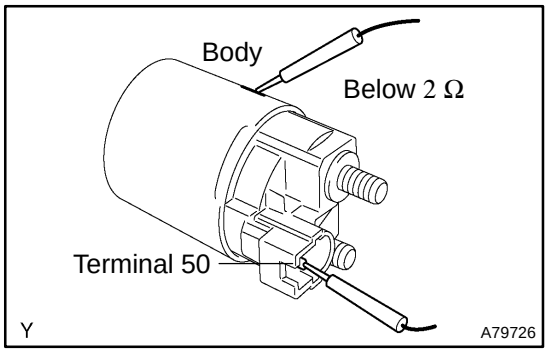

(c) Check if the hold−in coil has an open circuit.
(1) Check the resistance between terminal 50 and the switch body.
Standard: Below 2 Ω

If the the result is not as specified, replace the magnetic switch.

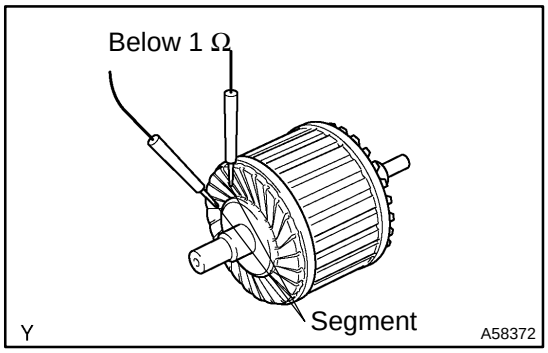

8. INSPECT STARTER ARMATURE ASSY

(a) Check if the commutator has an open circuit.
(1) Check the resistance between the segments of the commutator.
Standard: Below 1 Ω

If the result is not as specified, replace the armature assy.

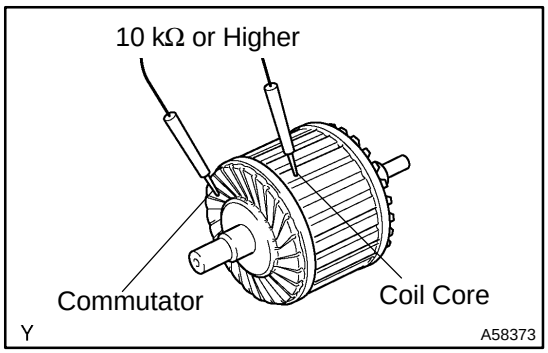

(b) Check if the commutator is grounded.
(1) Check the resistance between the commutator and armature coil core.
Standard: 10 kΩ or higher

If the result is not as specified, replace the armature assy.

(c) Check the commutator for contamination and burns on its surface.

If the surface is dirty or burnt, correct it with sandpaper (No.400) or a lathe.

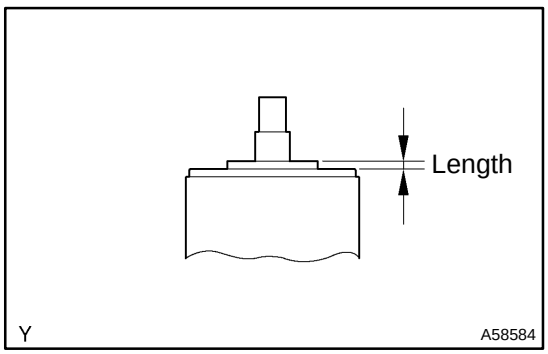

(d) Using a vernier caliper, measure the commutator's length.
Specified length: 3.1 to 3.8 mm (0.122 to 0.150 in.)

If the length is greater than the maximum, replace the starter armature.

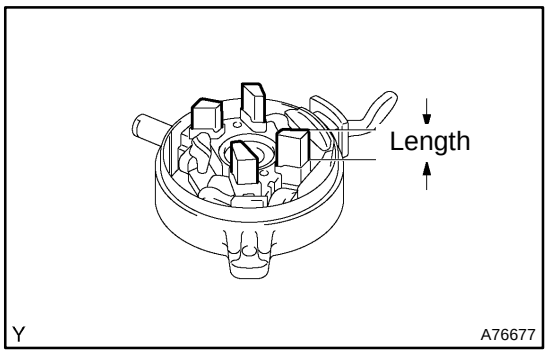

9. INSPECT STARTER COMMUTATOR END FRAME COVER

(a) Using a vernier caliper, measure the brush length.

Specified length: 4.0 to 9.0 mm (0.158 to 0.359 in.)

If the length is less than the minimum, replace the end frame assy.

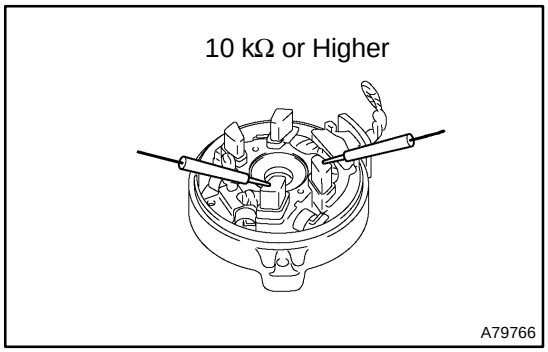

(b) Check the brush insulation.

(1) Check the resistance between the positive (+) and negative (−) brush.

Standard: 10 kΩ or higher

If the result is not as specified, repair or replace the end frame assy.

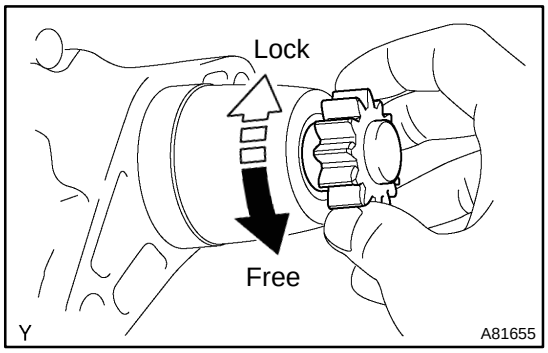

10. INSPECT CLUTCH&BEARING CENTER

(a) Check the starter clutch.

(1) Rotate the clutch pinion gear counterclockwise and check that it turns freely. Try to rotate the clutch pinion gear clockwise and check that it locks.

If necessary, replace the clutch & bearing center.

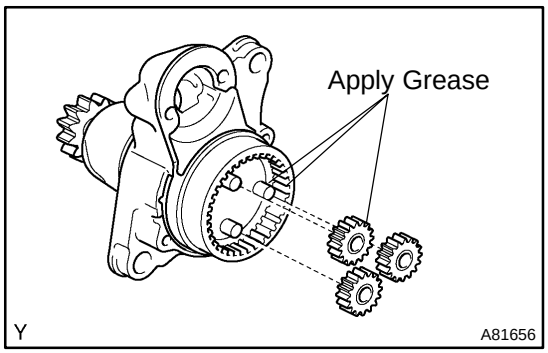

11. INSTALL PLANETARY GEAR

(a) Apply grease to the planet gears and pin parts of the planetary shaft.

(b) Install the 3 planetary gears.

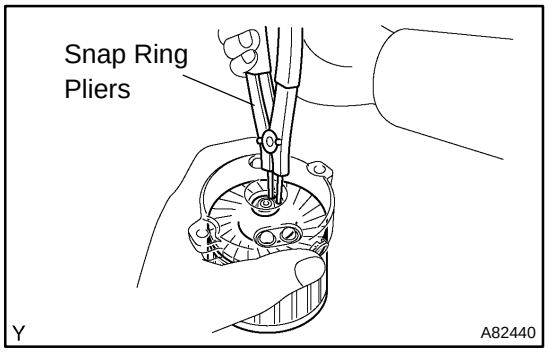

12. INSTALL STARTER ARMATURE ASSY

(a) Apply grease to the plate washer and the armature shaft.

(b) Install the starter armature to the starter commutator end frame.

(c) Using snap ring pliers, install the plate washer and a new snap ring.

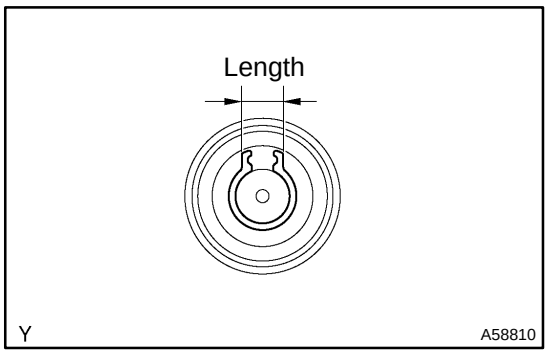

(d) Using a vernier caliper, measure length of the snap ring.
Maximum length: 5.0 mm (0.197 in.)

If the length is greater than the maximum, replace it with a new snap ring.

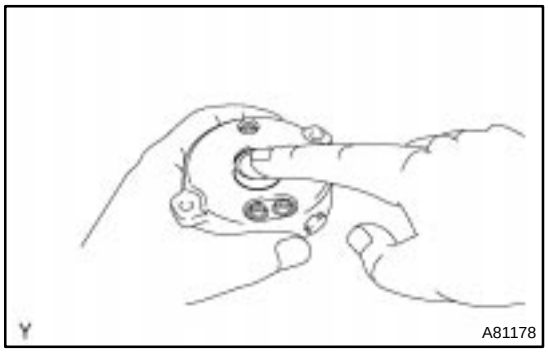

13. INSTALL STARTER COMMUTATOR END FRAME COVER

(a) Install the end frame cover to the commutator end frame.

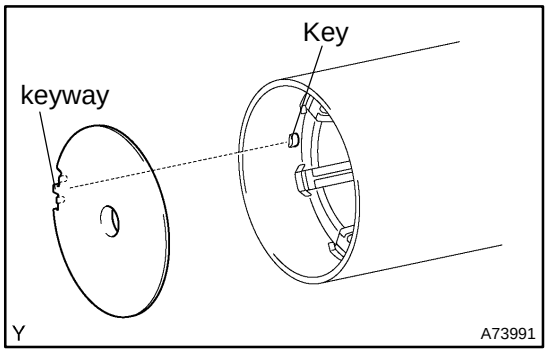

14. INSTALL STARTER ARMATURE PLATE

(a) Insert the armature plate to the starter field frame.

(b) Align the keyway of the starter plate with the key inside the starter field frame, and install the starter plate.

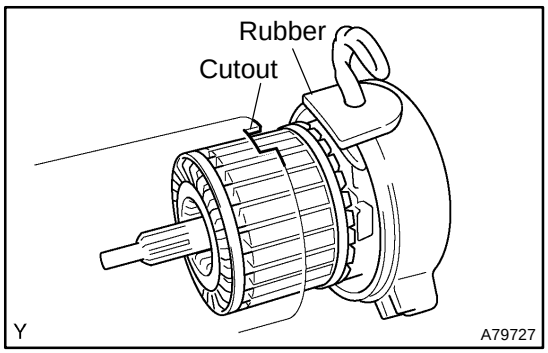

15. INSTALL STARTER COMMUTATOR END FRAME ASSY

(a) Align the rubber of the end frame with the cutout of the field frame.

(b) Install the end frame to the field frame.

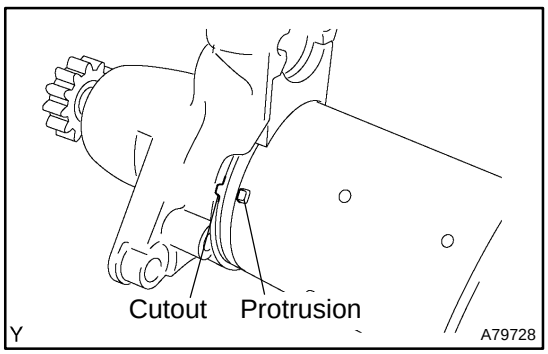

16. INSTALL STARTER FIELD FRAME ASSY

(a) Align the protrusion of the starter field frame with the cut out of the starter drive housing.

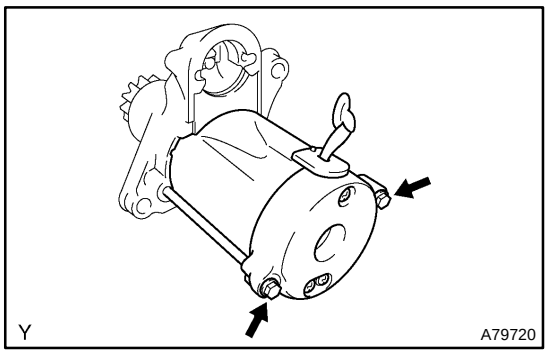

(b) Install the field frame with the 2 through bolts.
Torque: 6.0 N·m (61 kgf·cm, 53 in.·lbf)

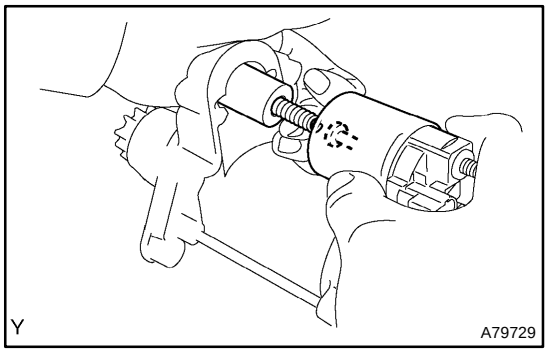

17. INSTALL MAGNETIC SWITCH ASSY

(a) Apply grease to the plunger and the hook.

(b) Hang the plunger hook of the magnetic switch to the drive lever.

(c) Install the plunger and the return spring.

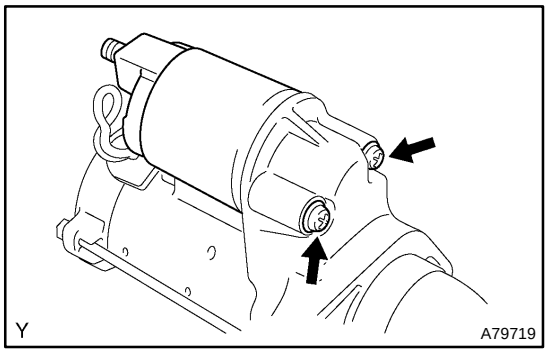

(d) Install the magnetic switch with the 2 screws.
Torque: 7.5 N·m (76 kgf·cm, 66 in.·lbf)

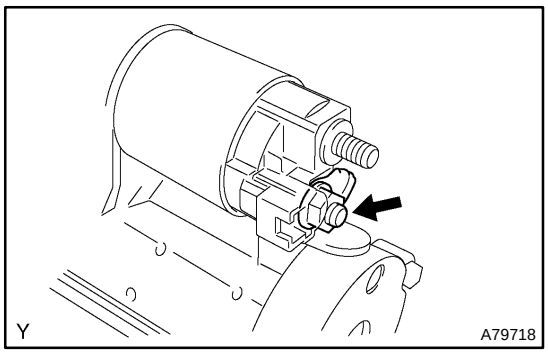

(e) Connect the lead wire to the magnetic switch with the nut.
Torque: 10 N·m (102 kgf·cm, 7 ft·lbf)

CHARGING SYSTEM (1MZ−FE/3MZ−FE)

190NY−03

PRECAUTION

CAUTION:

- **Check that the battery cables are connected to the correct terminals.**
- **Disconnect the battery cables when the battery is given a quick charge.**
- **Do not perform tests with a high voltage insulation resistance tester.**
- **Never disconnect the battery while the engine is running.**
- **Check that the charging cable is tightened on terminal B of the generator and the fuse box.**

190SA−02

ON−VEHICLE INSPECTION

1. CHECK BATTERY CONDITION

(a) Check the battery for damage and deformation. If severe damage, deformation or leakage is found, replace the battery.

(b) Check the electrolyte quantity of each cell.

For batteries that are maintenance−free:

If the electrolyte quantity is below the recommended amount, replace the battery.

For batteries that are not maintenance−free:

If the electrolyte quantity is below the recommended amount, add distilled water.

CAUTION:

If the battery has gone flat or if the engine cannot be started easily, the engine may not be recovered properly. Recharge the battery and perform inspections again before returning the vehicle to the customer.

2. CHECK BATTERY TERMINALS, FUSIBLE LINK AND FUSES

(a) Check that the battery terminals are not loose or corroded.

If the terminals are corroded, clean the terminals.

(b) Check the fusible link, high−current fuses and fuses for continuity.

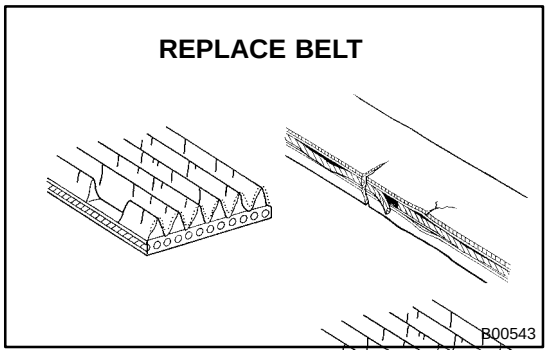

3. INSPECT DRIVE BELT

(a) Check the belt for wear, cracks and other signs of damage.

If any defect is found, replace the drive belt.

HINT:

Replace the drive belt if the following defects are found:

- If the belt has worn out until the wire can be seen.
- If the cracks reach the wire more than one place.
- If the belt has chunks missing from the ribs.

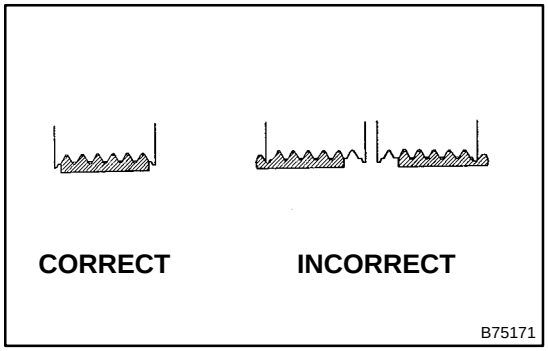

(b) Check that the belt fits properly in the ribbed grooves.

HINT:

With your hand, confirm that the belt has not slipped out of the groove on the bottom of the pulley.

4. VISUALLY CHECK GENERATOR WIRING

(a) Check that the wiring is in good condition.

5. LISTEN FOR ABNORMAL NOISES FROM GENERATOR

(a) Check that there is no abnormal noise from the generator while the engine is running.

6. INSPECT CHARGE WARNING LAMP CIRCUIT

(a) Turn the ignition switch ON. Check that the charge warning lamp turns on.

(b) Start the engine and check that the lamp turns off.

If the lamp does not operate as specified, troubleshoot the charge warning lamp circuit.

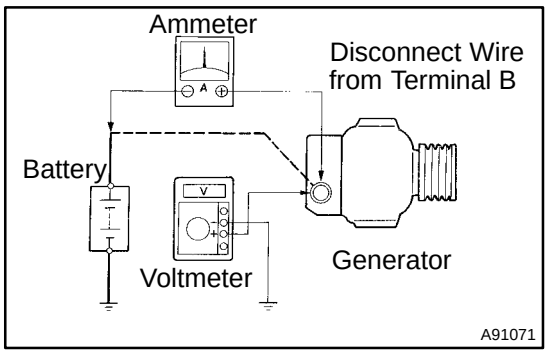

7. INSPECT CHARGING CIRCUIT WITHOUT LOAD

HINT:

If a battery/generator tester is available, connect the tester to the charging circuit according to the manufacturer's instructions.

(a) If a tester is not available, connect a voltmeter to the charging circuit as follows.
  (1) Disconnect the wire from terminal B of the generator and connect it to the negative (−) lead of the ammeter.
  (2) Connect the positive (+) lead of the ammeter to terminal B of the generator.
  (3) Connect the positive (+) lead of the voltmeter to terminal B of the generator.
  (4) Ground the negative (−) lead of the voltmeter.

(b) Check the charging circuit.
  (1) Keep the engine speed at 2,000 rpm, check the reading on the ammeter and voltmeter.

  Standard amperage: 10 A or less
  Standard voltage: 13.2 to 14.8 V

8. INSPECT CHARGING CIRCUIT WITH LOAD

(a) With the engine running at 2,000 rpm, turn on the high−beam headlamps and turn the heater blower switch to the HI position.

(b) Check the reading on the ammeter.

  Standard amperage: 30 A or more

HINT:

- If the ammeter reading is less than the standard amperage, repair the generator.
- If the battery is fully charged, the indication will sometimes be less than the standard amperage.

GENERATOR ASSY (1MZ−FE/3MZ−FE)

190SB−02

COMPONENTS

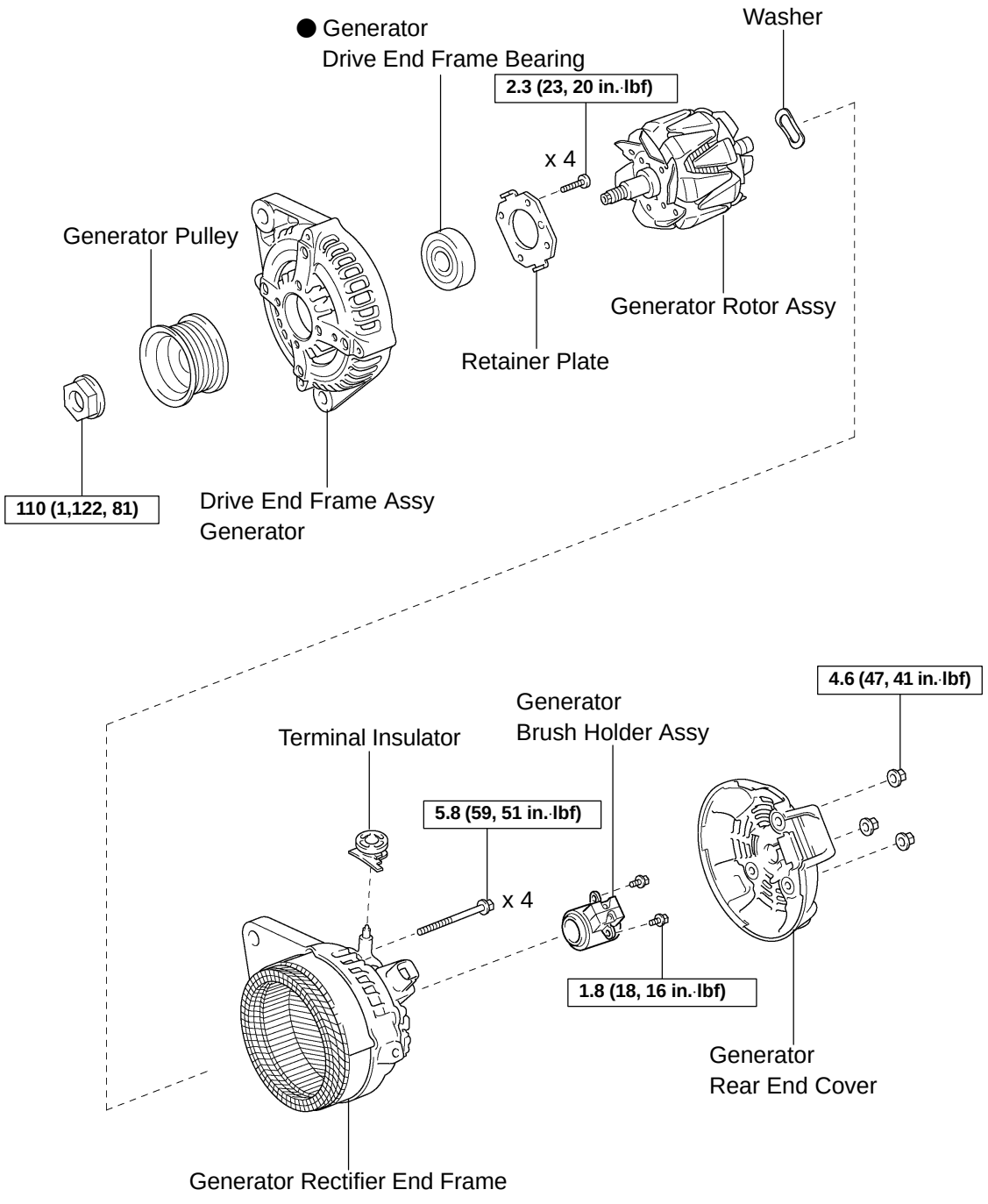

N·m (kgf·cm, ft·lbf) : Specified torque

● Non−reusable part

A90290

190O5−05

REPLACEMENT

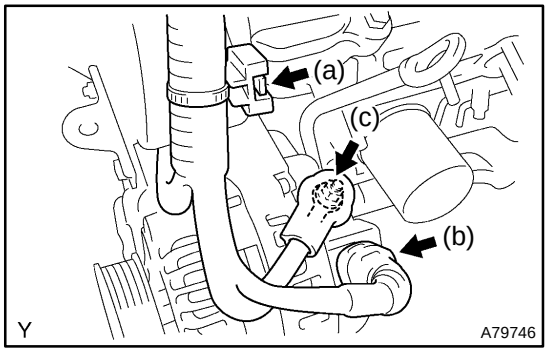

1. REMOVE GENERATOR ASSY

(a) Remove the wire harness clamp.

(b) Disconnect the generator connector.

(c) Open the terminal cap, remove the nut and disconnect the generator wire.

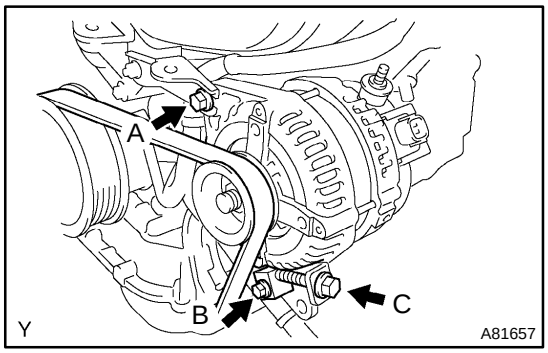

(d) Loosen bolts A and B.

(e) Loosen bolt C to lessen the tension of the V belt.

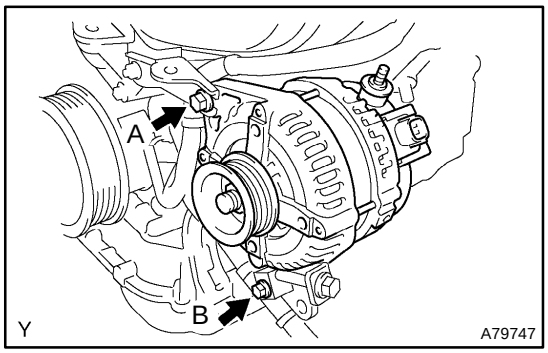

(f) Remove bolts A and B, and the generator.

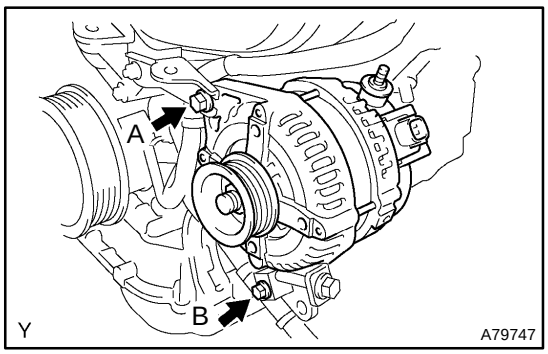

2. INSTALL GENERATOR ASSY

(a) Temporarily install the generator with bolts A and B.

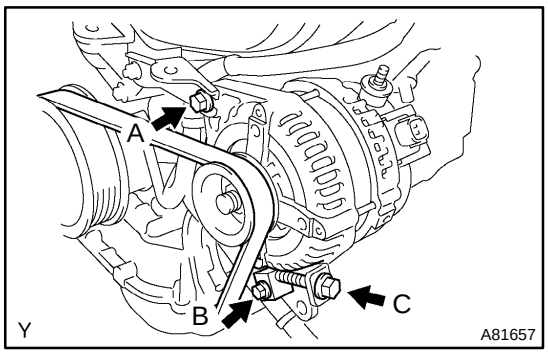

(b) Adjust the V belt tension by tightening bolt C (see page 14−140).

(c) Tighten bolts A and B.

Torque:
58 N·m (592 kgf·cm, 43 ft·lbf) for bolt A
18 N·m (184 kgf·cm, 13 ft·lbf) for bolt B

(d) Install the generator wire with the nut.

Torque: 9.8 N·m (100 kgf·cm, 7 ft·lbf)

(e) Connect the generator connector.

(f) Install the wire harness clamp.

3. INSPECT DRIVE BELT (See page 19−39)

190TO−01

OVERHAUL

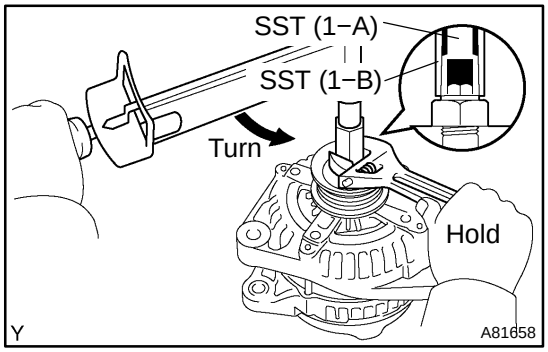

1. REMOVE GENERATOR PULLEY

SST 09820−63010 (09820−06010, 09820−06020)

HINT:

SST (1−A, B)	09820−06010
SST (2)	09820−06020

(a) Hold SST (1−A) with a torque wrench, and tighten SST (1−B) clockwise to the specified torque.

Torque: 39 N·m (400 kgf·cm, 29 ft·lbf)

NOTICE:

Check that SST is secured to the rotor shaft.

(b) Clamp SST (2) in a vise.

(c) Insert SST (1−A, B) into SST (2), and attach the pulley nut to SST (2).

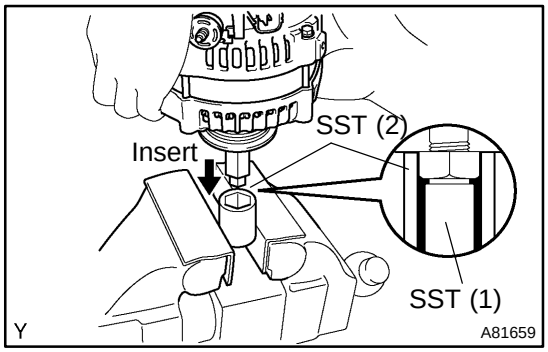

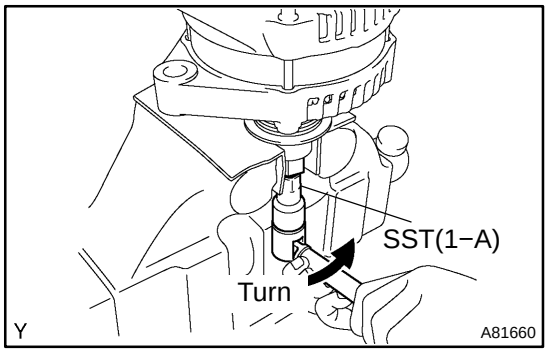

(d) To loosen the pulley nut, turn SST (1−A) in the direction shown in the illustration.

NOTICE:

To prevent damage to the rotor shaft, do not loosen the pulley nut more than one−half turn.

(e) Remove the generator from SST (2).

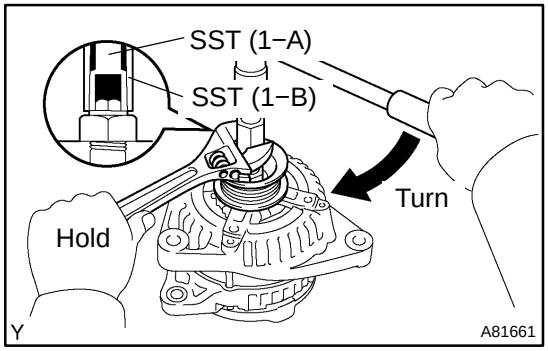

(f) Turn SST (1−B) and remove SST (1−A, B).

(g) Remove the pulley nut and generator pulley.

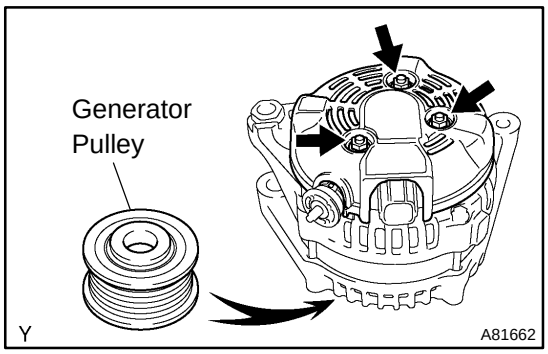

2. REMOVE GENERATOR REAR END COVER

(a) Place the generator on the generator pulley.

(b) Remove the 3 nuts and the generator rear end cover.

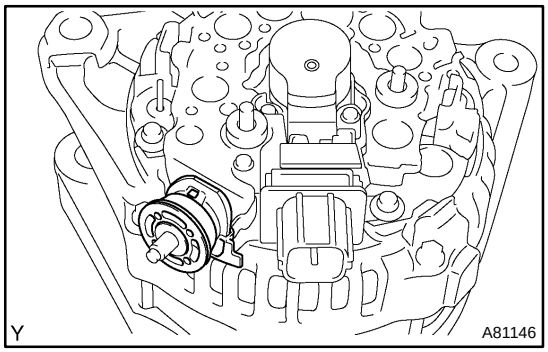

3. REMOVE TERMINAL INSULATOR

(a) Remove the terminal insulator from the generator rectifier end frame.

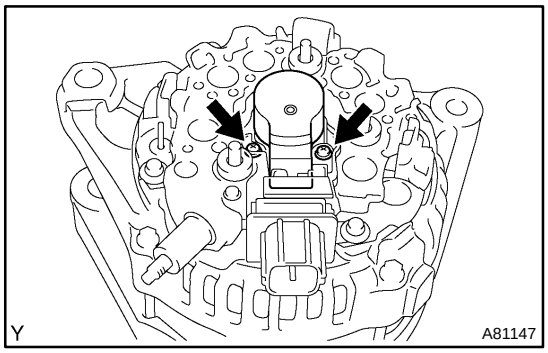

4. REMOVE GENERATOR BRUSH HOLDER ASSY

(a) Remove the 2 screws and the generator brush holder.

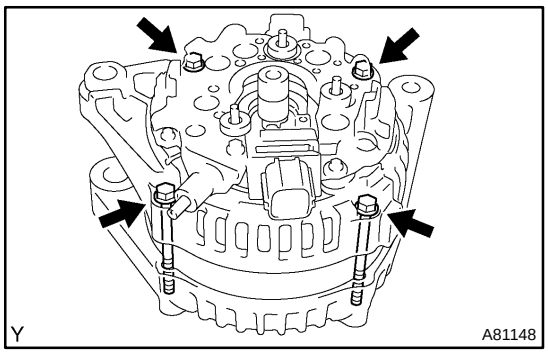

5. REMOVE GENERATOR COIL ASSY

(a) Remove the 4 bolts.

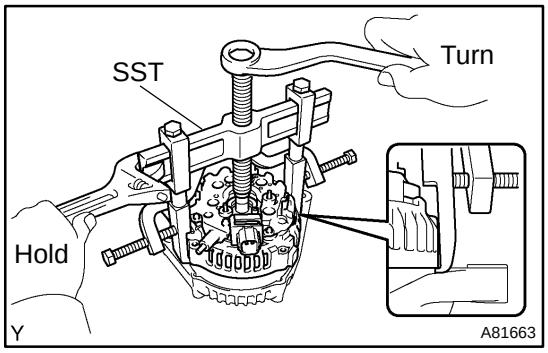

(b) Using SST, remove the generator rectifier end frame.

SST 09950−40011 (09951−04020, 09952−04010, 09953−04020, 09954−04010, 09955−04071, 09957−04010, 09958−04011)

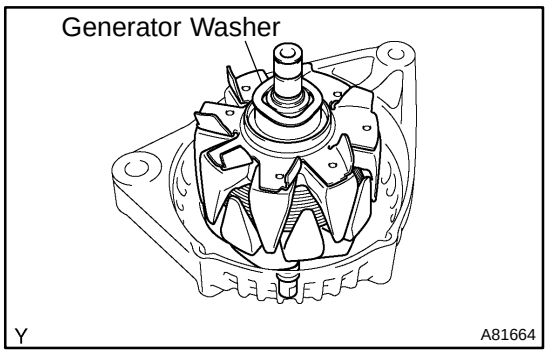

6. REMOVE GENERATOR ROTOR ASSY

(a) Remove the generator washer and the generator rotor.

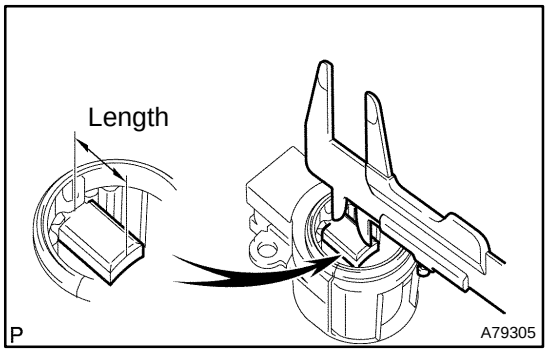

7. INSPECT GENERATOR BRUSH HOLDER ASSY

(a) Check the brush length.

(1) Using a vernier caliper, measure the exposed brush length.

Specified brush length: 4.5 to10.5 mm (0.177 to 0.413 in.)

If the exposed brush length is less than minimum, replace the generator brush holder.

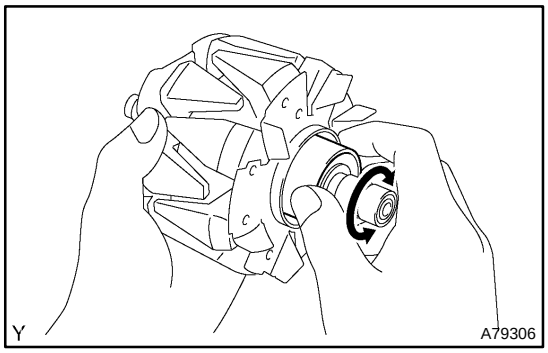

8. INSPECT GENERATOR ROTOR ASSY

(a) Check the bearing is not rough or worn.

If necessary, replace the generator rotor.

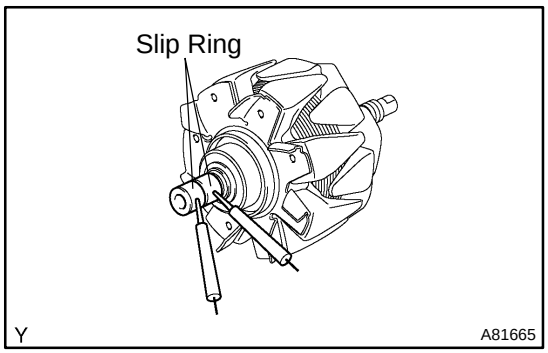

(b) Check the rotor for open circuit.

(1) Using an ohmmeter, measure the resistance between the slip ring.

Standard: 2.3 to 2.7 Ω at 20°C (68°F)

If the resistance is not as specified, replace the generator rotor.

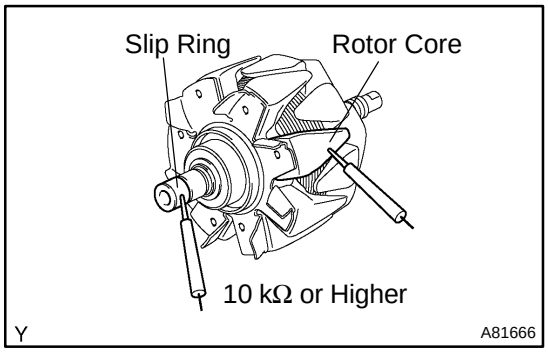

(c) Check the rotor for ground.

(1) Using an ohmmeter, check the resistance between the slip ring and the rotor core.

Standard: 10 kΩ or higher

If the resistance is not as specified, replace the generator rotor.

(d) Inspect slip rings.

(1) Check that the slip rings are not rough or scored.

If rough or scored, replace the generator rotor.

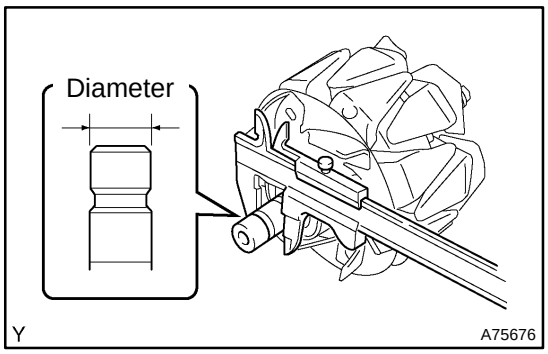

(e) Check the slip ring diameter.
(1) Using a vernier caliper, measure the slip ring diameter.
Specified diameter: 14.0 to 14.4 mm (0.551 to 0.567 in.)

If the diameter is less than minimum, replace the generator rotor.

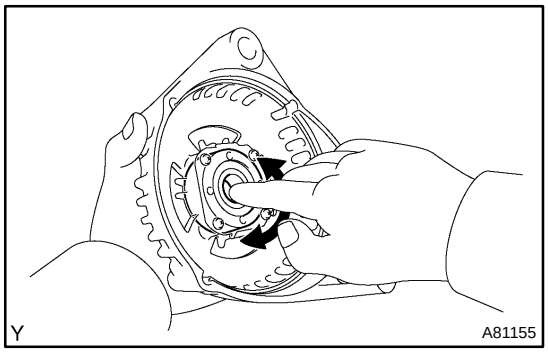

9. INSPECT GENERATOR DRIVE END FRAME BEARING

(a) Check the bearing is not rough or worn.

If necessary, replace the bearing.

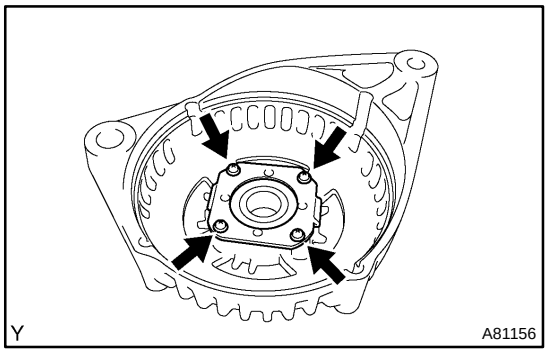

10. REMOVE GENERATOR DRIVE END FRAME BEARING

(a) Remove the 4 screws and the retainer plate.

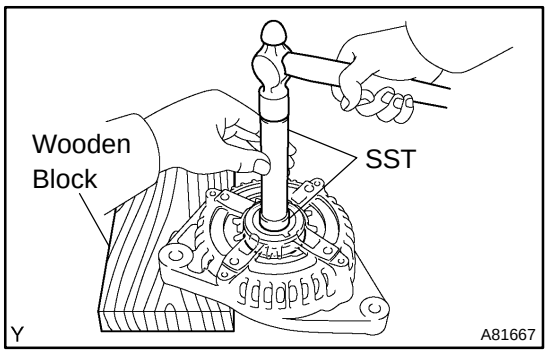

(b) Using SST, tap out the bearing.
SST 09950−60010 (09951−00250), 09950−70010 (09951−07100)

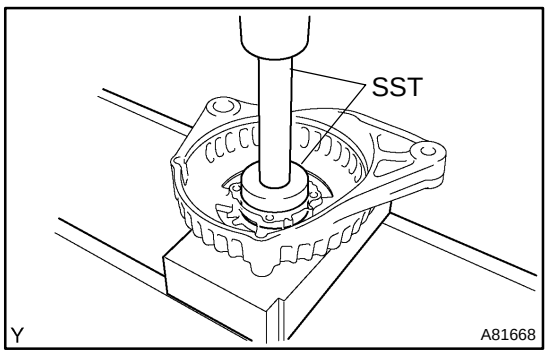

11. INSTALL GENERATOR DRIVE END FRAME BEARING

(a) Using SST and a press, press in a new bearing.
SST 09950−60010 (09951−00470), 09950−70010 (09951−07100)

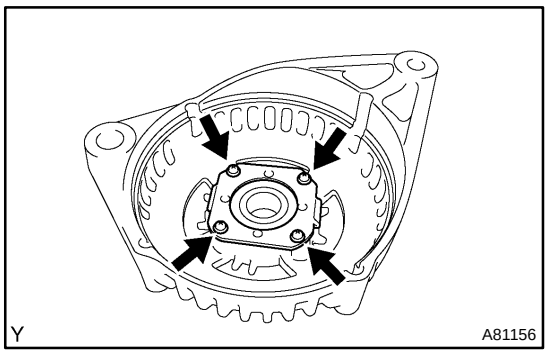

(b) Install the retainer plate with the 4 screws.
Torque: 2.3 N·m (23 kgf·cm, 20 in.·lbf)

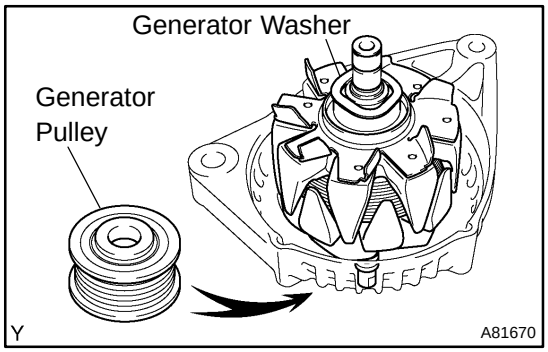

12. INSTALL GENERATOR ROTOR ASSY

(a) Place the generator drive end frame on the generator pulley.

(b) Install the generator rotor and the generator washer.

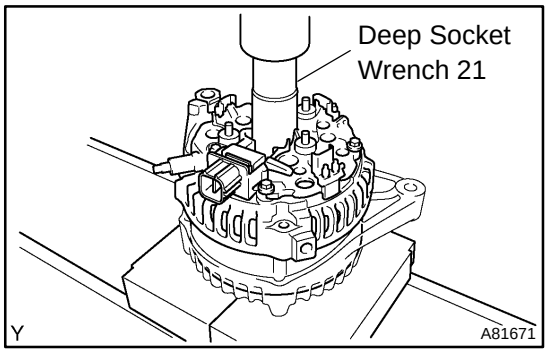

13. INSTALL GENERATOR COIL ASSY

(a) Using a deep socket wrench 21 and a press, press in the generator rectifier end frame carefully.

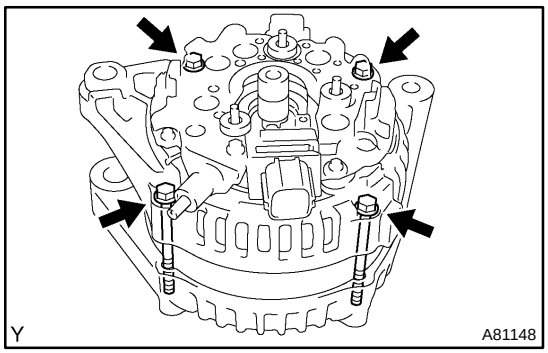

(b) Tighten the 4 bolts.
Torque: 5.8 N·m (59 kgf·cm, 51 in.·lbf)

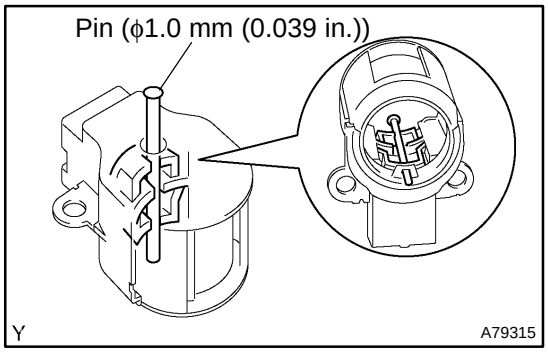

14. INSTALL GENERATOR BRUSH HOLDER ASSY

(a) While pushing the 2 brushes to inside the brush holder, insert a pin (ϕ1.0 mm (0.039 in.)) into the brush holder hole.

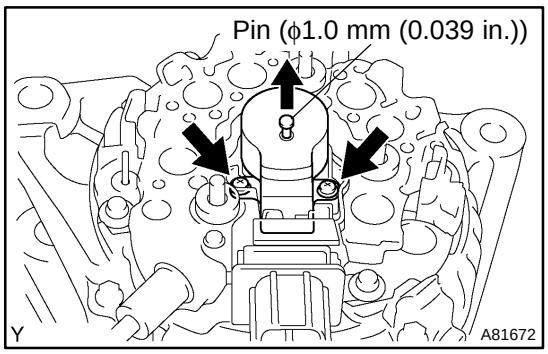

(b) Install the generator brush holder with the 2 screws.
Torque: 1.8 N·m (18 kgf·cm, 16 in.·lbf)

(c) Pull out the pin (ϕ1.0 mm (0.039 in.)) from the generator brush holder.

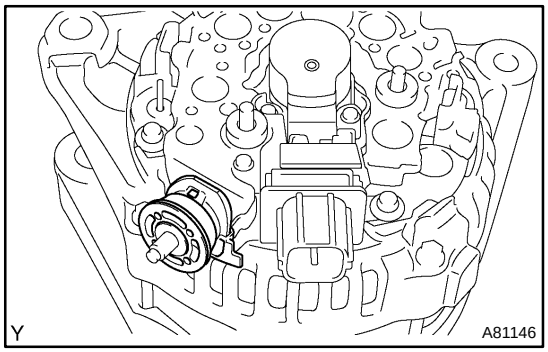

15. INSTALL TERMINAL INSULATOR

(a) Place the generator drive end frame on the generator pulley.

(b) Install the generator rotor and the generator washer.

NOTICE:

Pay attention the mounting orientation of the terminal insulator.

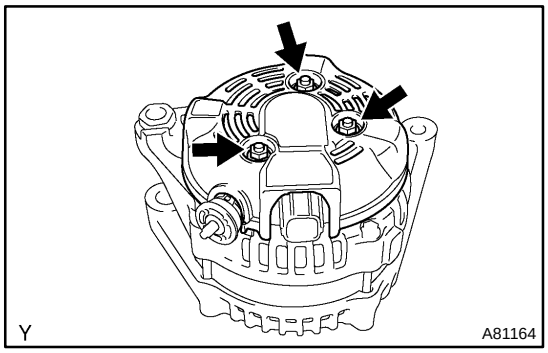

16. INSTALL GENERATOR REAR END COVER

(a) Install the generator rear end cover with the 3 nuts.
Torque: 4.6 N·m (47 kgf·cm, 41 in.·lbf)

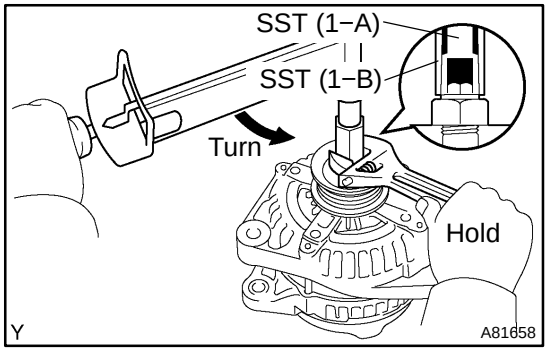

17. INSTALL GENERATOR PULLEY

SST 09820−63010 (09820−06010, 09820−06020)

HINT:

SST (1−A, B)	09820−06010
SST (2)	09820−06020

(a) Install the generator pulley to the rotor shaft by tightening the pulley nut by hand.

(b) Hold SST (1−A) with a torque wrench, and tighten SST (1−B) clockwise to the specified torque.
Torque: 39 N·m (400 kgf·cm, 29 ft·lbf)

NOTICE:

Check that SST is secured to the rotor shaft.

LOWER BALL JOINT ASSY FRONT LH

2601I−10

REPLACEMENT

HINT:

COMPONENTS: See page 26−3.

1. **REMOVE FRONT WHEEL**
2. **REMOVE FRONT AXLE HUB LH NUT (See page 30−8)**
   SST 09930−00010
3. **DISCONNECT SPEED SENSOR FRONT LH (W/ ABS) (See page 30−8)**
4. **DISCONNECT FRONT DISC BRAKE CALIPER ASSY LH (See page 30−23)**
5. **REMOVE FRONT DISC**
6. **DISCONNECT TIE ROD END SUB−ASSY LH (See page 30−8)**
   SST 09628−62011
7. **DISCONNECT FRONT SUSPENSION ARM SUB−ASSY LOWER NO.1 LH (See page 30−8)**
8. **REMOVE FRONT AXLE ASSY LH (See page 30−23)**
9. **REMOVE LOWER BALL JOINT ASSY FRONT LH (See page 30−23)**
   SST 09628−62011

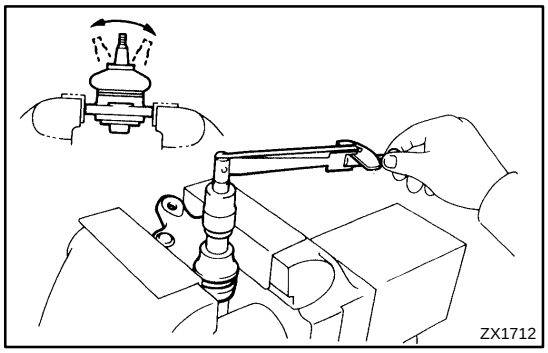

10. **INSPECT LOWER BALL JOINT ASSY FRONT LH**
(a) As shown in the illustration, flip the ball joint stud back and forth 5 times, before installing the nut.
(b) Using a torque wrench, turn the nut continuously at a rate of 3 − 5 seconds per 1 turn and take the torque reading on the 5th turn.
Turning torque:
0.98 − 3.43 N·m (10 − 35 kgf·cm, 8.7 − 30 in.·lbf)

11. **INSTALL LOWER BALL JOINT ASSY FRONT LH (See page 30−23)**
12. **INSTALL FRONT AXLE ASSY LH (See page 30−23)**
13. **INSTALL FRONT SUSPENSION ARM SUB−ASSY LOWER NO.1 LH (See page 30−8)**
14. **INSTALL TIE ROD END SUB−ASSY LH (See page 30−8)**
15. **INSTALL FRONT DISC**
16. **INSTALL FRONT DISC BRAKE CALIPER ASSY LH (See page 30−23)**
17. **INSTALL SPEED SENSOR FRONT LH (W/ ABS) (See page 30−8)**
18. **INSTALL FRONT AXLE HUB LH NUT (See page 30−8)**
19. **INSTALL FRONT WHEEL**
    Torque: 103 N·m (1,050 kgf·cm, 76 ft·lbf)
20. **INSPECT AND ADJUST FRONT WHEEL ALIGNMENT (See page 26−5)**
21. **CHECK ABS SPEED SENSOR SIGNAL (W/ ABS)**
    w/ VSC (See page 05−1002)
    w/o VSC (BOSCH MADE) (See page 05−873)
    w/o VSC (DENSO MADE) (See page 05−938)

FRONT SUSPENSION SYSTEM

2601D−13

PROBLEM SYMPTOMS TABLE

Use the table below to help you find the cause of the problem. The numbers indicate the priority of the likely cause of the problem. Check each part in order. If necessary, replace these parts.

Symptom	Suspect Area	See page
Bottoming	1. Vehicle (Overloaded) 2. Spring (Weak) 3. Shock absorber (Worn)	– 26−11 26−11
Sways/pitches	1. Tire (Worn or improperly inflated) 2. Stabilizer bar (Bent or broken) 3. Shock absorber (Worn)	28−1 26−20 26−11
Front wheel shimmy	1. Tire (Worn or improperly inflated) 2. Wheel (Out of balance) 3. Shock absorber (Worn) 4. Wheel alignment (Incorrect) 5. Ball joint (Worn) 6. Hub bearing (Worn) 7. Steering linkage (Loose or worn)	28−1 28−1 26−11 26−5 27−3 26−19 30−2 –
Abnormal tire wear	1. Tire (Worn or improperly inflated) 2. Wheel alignment (Incorrect) 3. Shock absorber (Worn) 4. Suspension parts (Worn)	28−1 26−5 27−3 26−11 –

2606O−07

REPAIR

HINT:

This is the repair procedure for vehicle pull.

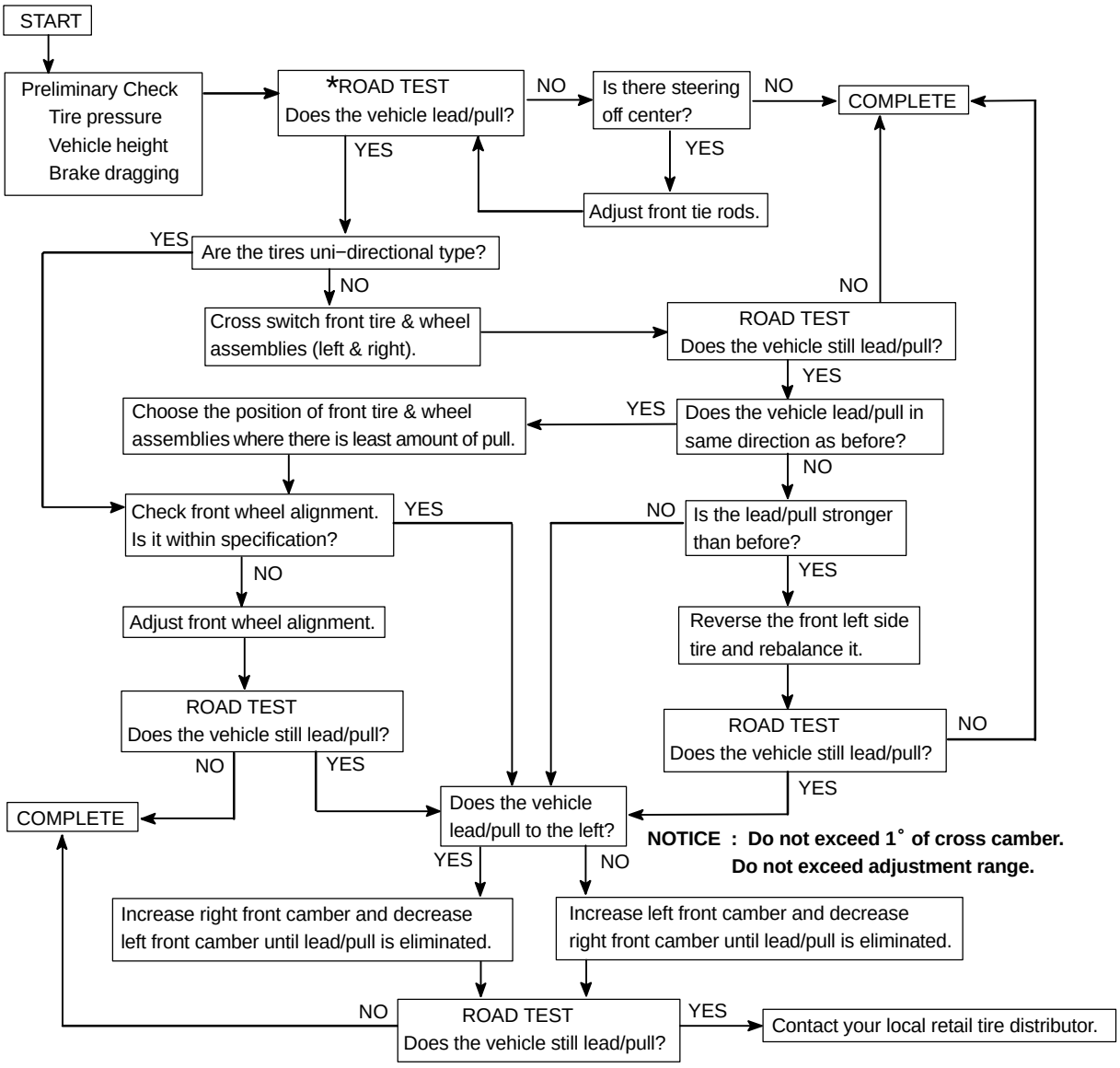

*Select a flat road where the vehicle can be driven in a straight line for 100 meters at a constant speed of 35mph. Please confirm safety and set the steering wheel to its straight position. Drive the vehicle in a straight line for 100 meters at a constant speed of 35mph without holding the steering wheel.

(1) The vehicle can keep straight but the steering wheel has some angle.

→STEERING OFF CENTER (See page 50−4)

(2) The vehicle cannot keep straight.

→STEERING PULL

FRONT SUSPENSION

COMPONENTS

2601C−09

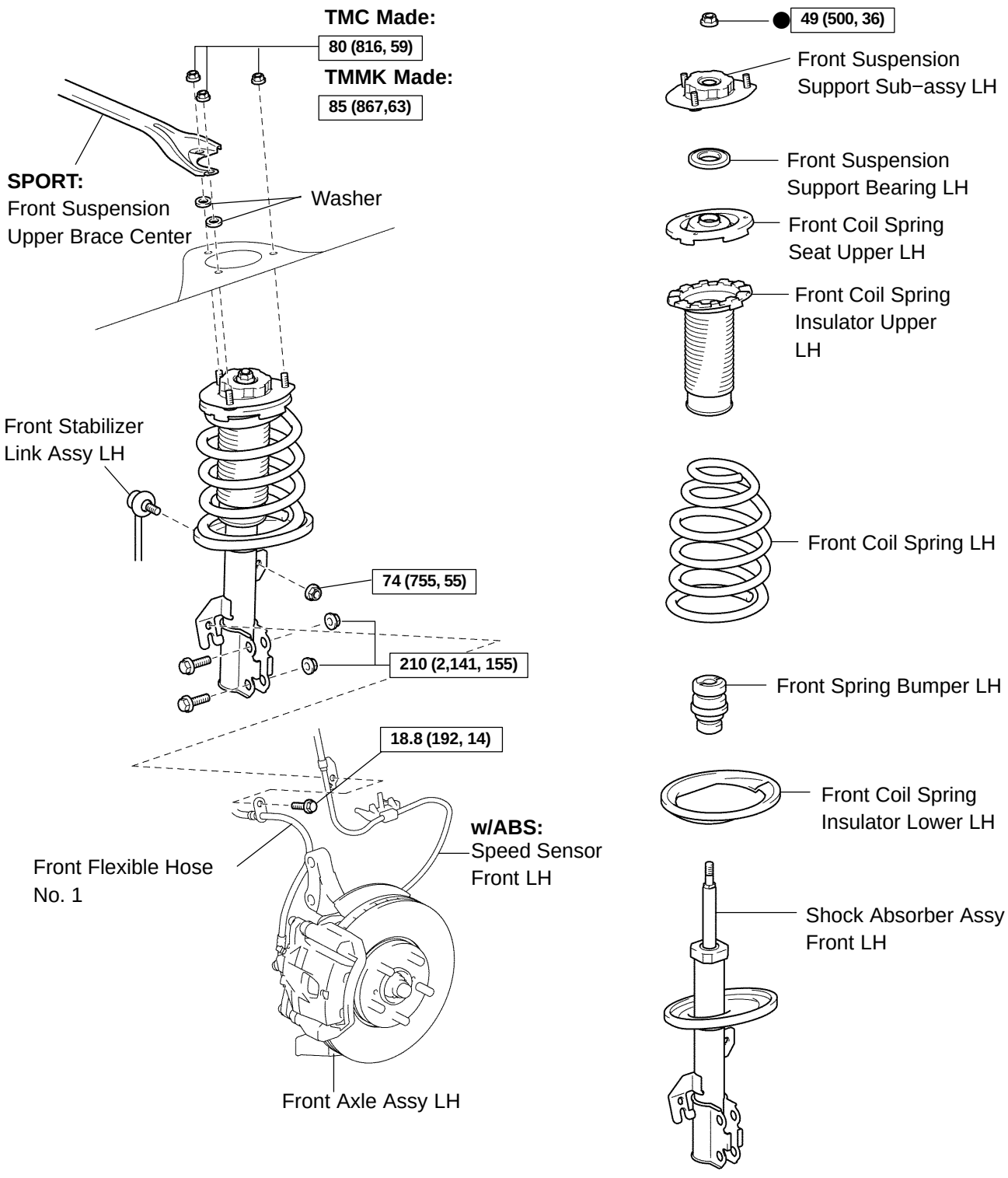

N·m (kgf·cm, ft·lbf) : Specified torque

● Non−reusable part

P

C90258

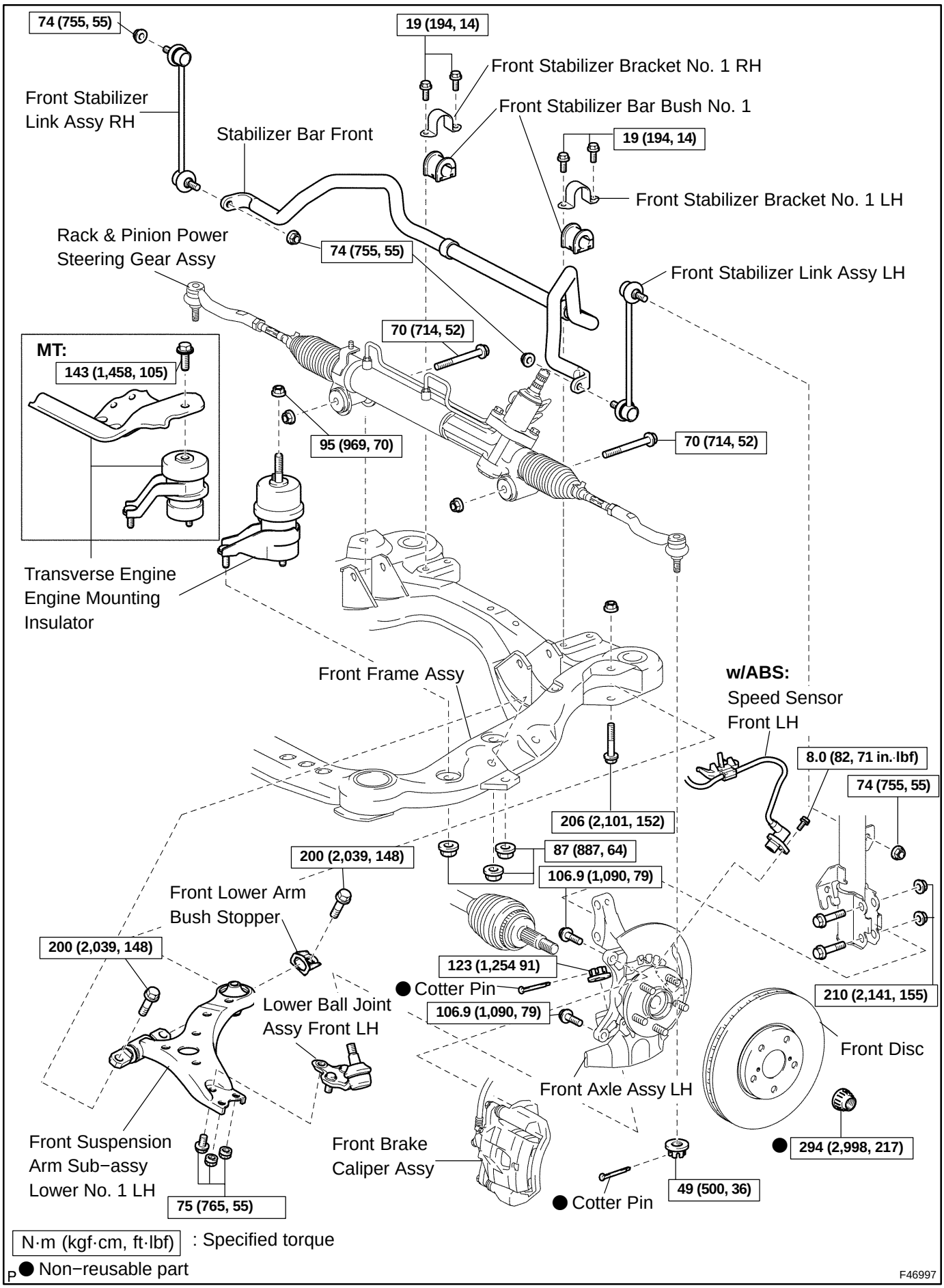
74 (755, 55)
19 (194, 14)
Front Stabilizer Bracket No. 1 RH
Front Stabilizer Link Assy RH
Front Stabilizer Bar Bush No. 1
Stabilizer Bar Front
19 (194, 14)
Front Stabilizer Bracket No. 1 LH
Rack & Pinion Power Steering Gear Assy
74 (755, 55)
Front Stabilizer Link Assy LH
70 (714, 52)
MT:
143 (1,458, 105)
95 (969, 70)
70 (714, 52)
Transverse Engine Engine Mounting Insulator
Front Frame Assy
w/ABS:
Speed Sensor Front LH
8.0 (82, 71 in.·lbf)
74 (755, 55)
206 (2,101, 152)
200 (2,039, 148)
87 (887, 64)
106.9 (1,090, 79)
Front Lower Arm Bush Stopper
200 (2,039, 148)
123 (1,254 91)
● Cotter Pin
106.9 (1,090, 79)
210 (2,141, 155)
Lower Ball Joint Assy Front LH
Front Disc
Front Axle Assy LH
Front Suspension Arm Sub−assy Lower No. 1 LH
Front Brake Caliper Assy
● 294 (2,998, 217)
49 (500, 36)
● Cotter Pin
75 (765, 55)
N·m (kgf·cm, ft·lbf) : Specified torque
P ● Non−reusable part
F46997

FRONT WHEEL ALIGNMENT

260L7−01

ADJUSTMENT

1. INSPECT TIRE (See page 28−1)

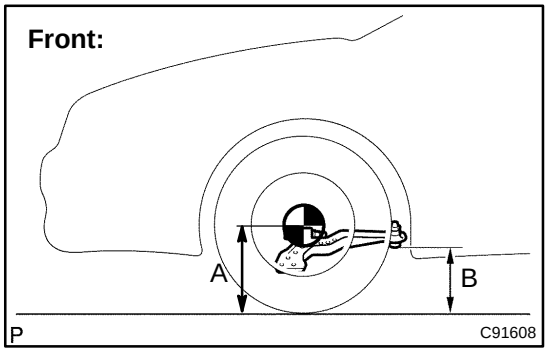

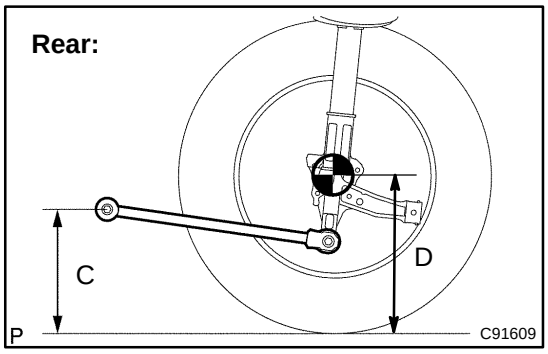

2. MEASURE VEHICLE HEIGHT

Vehicle height:

2AZ−FE COMFORT:

	USA, Canada	Mexico
Front (A − B)	119 mm (4.69 in.)	106 mm (4.17 in.)
Rear (D − C)	45 mm (1.77 in.)	33 mm (1.30 in.)

2AZ−FE PREMIUM:

Front (A − B)	120 mm (4.72 in.)
Rear (D − C)	45 mm (1.77 in.)

2AZ−FE SPORT:

Front (A − B)	120 mm (4.72 in.)
Rear (D − C)	48 mm (1.89 in.)

1MZ−FE COMFORT:

Front (A − B)	120 mm (4.72 in.)
Rear (D − C)	46 mm (1.81 in.)

1MZ−FE PREMIUM:

	USA, Canada	Mexico
Front (A − B)	119 mm (4.69 in.)	106 mm (4.17 in.)
Rear (D − C)	47 mm (1.85 in.)	33 mm (1.30 in.)

3MZ−FE SPORT:

Front (A − B)	121 mm (4.76 in.)
Rear (D − C)	48 mm (1.89 in.)

Measuring points:

A: Ground clearance of front wheel center

B: Ground clearance of lower suspension arm No. 2 set bolt center

C: Ground clearance of strut rod set bolt center

D: Ground clearance of rear wheel center

NOTICE:

Before inspecting the wheel alignment, adjust the vehicle height to the specified value.

HINT:

Bounce the vehicle at the corners up and down to stabilize the suspension and inspect the vehicle height.

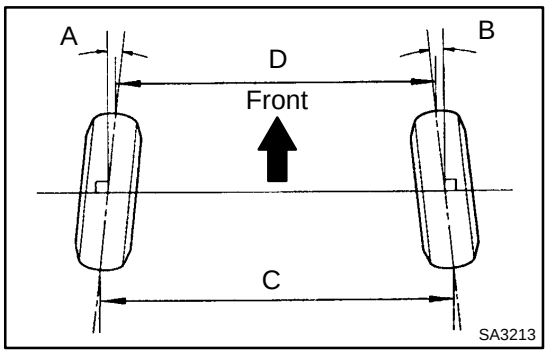

3. INSPECT TOE−IN

Toe−in:

Toe−in (total)	A + B: 0° ± 12' (0° ± 0.2°) C − D: 0 ± 2 mm (0 ± 0.08 in.)

HINT:

- Measure "A + B" when "C − D" can not be measured.
- If toe−in is not within the specified range, adjust it at the rack ends.

4. ADJUST TOE−IN

(a) Remove the rack boot set clips.

(b) Loosen the tie rod end lock nuts.

(c) Turn the right and left rack ends by an equal amount to adjust the toe−in.

HINT:

Try to adjust the toe−in to the center of the specified range.

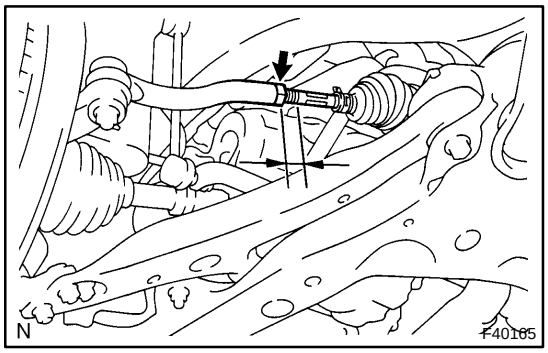

(d) Make sure that the lengths of the right and left rack ends are the same.

(e) Torque the tie rod end lock nuts.

Torque: 74 N·m (755 kgf·cm, 55 ft·lbf)

(f) Place the boots on the seats and install the clips.

HINT:

Make sure that the boots are not twisted.

(g) Perform VSC system calibration. (See page 05−1002)

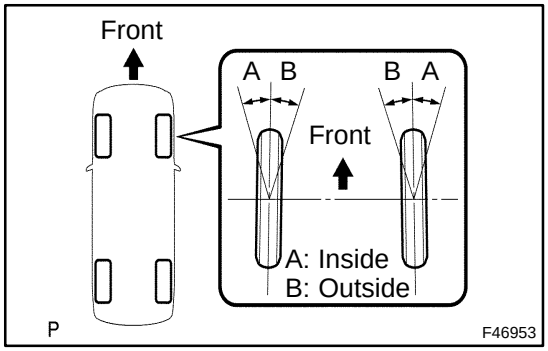

5. INSPECT WHEEL ANGLE

(a) Turn the steering wheel fully left and right, and measure the turning angle.

Wheel turning angle:

USA, Canada:

	15 inch	16 inch
Inside wheel	39°04' ± 2° (39.07° ± 2°)	36°39' ± 2° (36.65° ± 2°)
Outside wheel: Reference	33°44' (33.73°)	32°11' (32.18°)

Mexico:

	15 inch	16 inch
Inside wheel	39°30' ± 2° (39.50° ± 2°)	37°00' ± 2° (37.00° ± 2°)
Outside wheel: Reference	34°02' (34.03°)	32°28' (32.47°)

If the right and left inside wheel angles differ from the specified value, check the right and left rack end lengths.

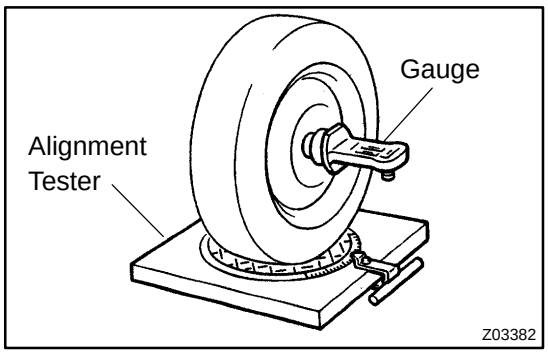

6. INSPECT CAMBER, CASTER AND STEERING AXIS INCLINATION

(a) Put the front wheel on the center of the alignment tester.

(b) Set the camber−caster−kingpin gauge at the center of the axle hub or drive shaft.

Camber and steering axis inclination:

	USA, Canada	Mexico
Camber	−0°43' ± 45'	−0°33' ± 45'
	(−0.72° ± 0.75°)	(−0.55° ± 0.75°)
Right−left error	45' (0.75°) or less	45' (0.75°) or less
Steering axis inclination	11°27' ± 45'	11°05' ± 45'
	(11.45° ± 0.75°)	(11.08° ± 0.75°)
Right−left error	45' (0.75°) or less	45' (0.75°) or less

Caster

3MZ−FE:

Caster	2°40' ± 45' (2.67° ± 0.75°)
Right−left error	45' (0.75°) or less

1MZ−FE:

	USA, Canada	Mexico
Caster	2°37' ± 45'	2°33' ± 45'
	(2.62° ± 0.75°)	(2.55° ± 0.75°)
Right−left error	45' (0.75°) or less	45' (0.75°) or less

2AZ−FE SPORT:

Caster	2°43' ± 45' (2.72° ± 0.75°)
Right−left error	45' (0.75°) or less

2AZ−FE Except SPORT:

	USA, Canada	Mexico
Caster	2°39' ± 45'	2°36' ± 45'
	(2.65° ± 0.75°)	(2.60° ± 0.75°)
Right−left error	45' (0.75°) or less	45' (0.75°) or less

If the caster and steering axis inclination are not within the specified ranges, after the camber has been correctly adjusted, recheck the suspension parts for damaged and/or worn out parts.

7. ADJUST CAMBER

NOTICE:

After the camber has been adjusted, inspect the toe−in.

(a) Remove the front wheel.

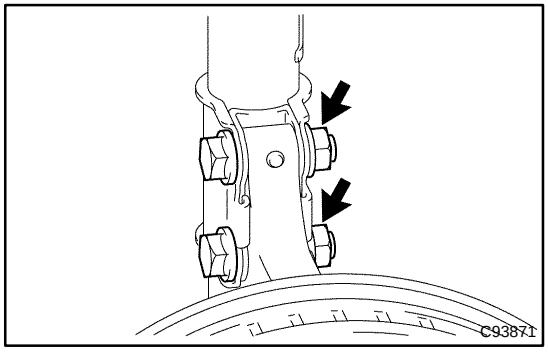

(b) Remove the 2 nuts on the lower side of the shock absorber assy front LH.

(c) Clean the installation surfaces of the shock absorber assy front LH and the steering knuckle.

(d) Temporarily install the 2 nuts.

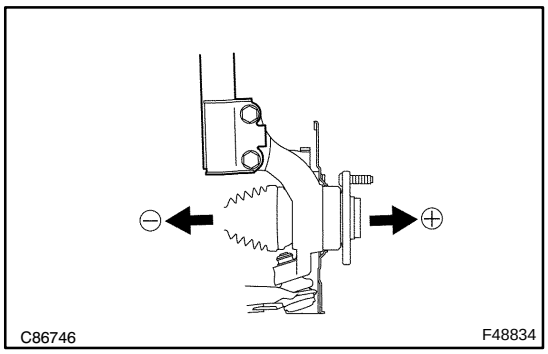

(e) Fully push or pull the front axle hub in the direction of the required adjustment.

(f) Tighten the nuts.
Torque: 210 N·m (2,141 kgf·cm, 155 ft·lbf)

(g) Install the front wheel.
Torque: 103 N·m (1,050 kgf·cm, 76 ft·lbf)

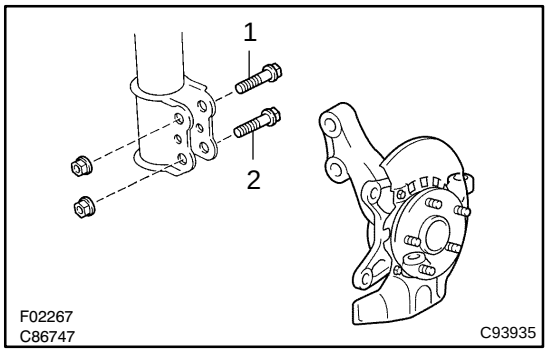

(h) Check the camber.

If the measured value is not within the specified range, calculate the required adjustment amount using the formula below.

(Camber adjustment amount) = Center of the specified range − Measured value

(i) Check installed bolts combination. Select appropriate bolts from the table below to adjust the camber within the specified range.

Move the axle toward (+) in step (e)	Refer to table (1) (Move the axle toward positive side)
Move the axle toward (−) in step (e)	Refer to table (2) (Move the axle toward negative side)

Table (1) (Move the axle toward positive side)

Installed Bolt / Adjusting Value	1	90105−17008	90105−17008	90105−17008	90105−17008	90105−17009	90105−17010	90105−17011
	2	90105−17008	90105−17009	90105−17010	90105−17011	90105−17011	90105−17011	90105−17011
−1 30’ to −1 15’								G
−1 15’ to −1 00’							G	A
−1 00’ to −0 45’						G	A	B
−0 45’ to −0 30’					G	A	B	C
−0 30’ to −0 15’				G	A	B	C	D
−0 15’ to 0			G	A	B	C	D	E
0 to 0 15’		A	B	C	D	E	F	
0 15’ to 0 30		B	C	D	E	F		
0 30’ to 0 45’		C	D	E	F			
0 45’ to 1 00’		D	E	F				
1 00’ to 1 15’		E	F					
1 15’ to 1 30’		F						

Selected Bolt Combination

	A	B	C	D	E	F	G
1	90105−17008	90105−17008	90105−17008	90105−17009	90105−17010	90105−17011	90105−17008
2	90105−17009	90105−17010	90105−17011	90105−17011	90105−17011	90105−17011	90105−17008

P F48751

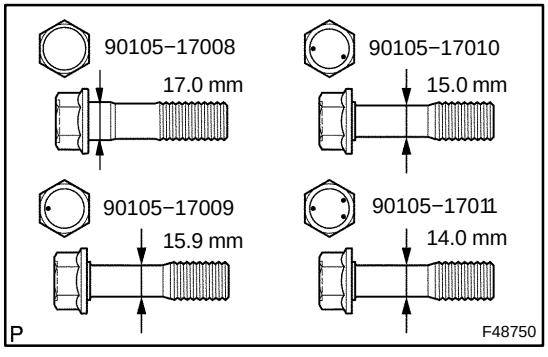

The body and suspension may be damaged if the camber is not correctly adjusted according to the above table.

NOTICE:

Replace the nut with a new one when replacing the bolt.

(j) Repeat the steps mentioned above. At step (b), replace 1 or 2 selected bolts.

HINT:

Replace one bolt at a time when replacing 2 bolts.

Table (2) (Move the axle toward negative side)

Installed Bolt / Adjusting Value	1	90105−17008	90105−17008	90105−17008	90105−17008	90105−17009	90105−17010	90105−17011
	2	90105−17008	90105−17009	90105−17010	90105−17011	90105−17011	90105−17011	90105−17011
−1 30' to −1 15'		F						
−1 15' to −1 00'		E	F					
−1 00' to −0 45'		D	E	F				
−0 45' to −0 30'		C	D	E	F			
−0 30' to −0 15'		B	C	D	E	F		
−0 15' to 0		A	B	C	D	E	F	
0 to 0 15'			G	A	B	C	D	E
0 15' to 0 30				G	A	B	C	D
0 30' to 0 45'					G	A	B	C
0 45' to 1 00'						G	A	B
1 00' to 1 15'							G	A
1 15' to 1 30'								G

Selected Bolt Combination

	A	B	C	D	E	F	G
1	90105−17008	90105−17008	90105−17008	90105−17009	90105−17010	90105−17011	90105−17008
2	90105−17009	90105−17010	90105−17011	90105−17011	90105−17011	90105−17011	90105−17008

P F48751

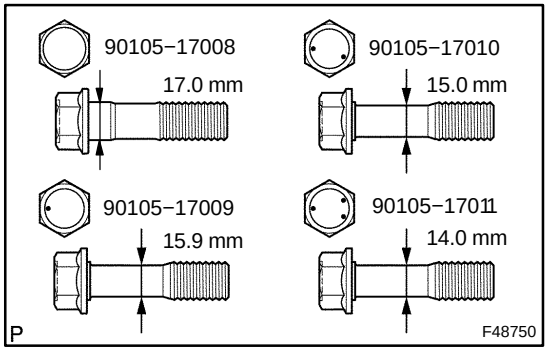

The body and suspension may be damaged if the camber is not correctly adjusted according to the above table.

NOTICE:

Replace the nut with a new one when replacing the bolt.

(k) Repeat the steps mentioned above. At step (b), replace 1 or 2 selected bolts.

HINT:

Replace one bolt at a time when replacing 2 bolts.

FRONT SHOCK ABSORBER WITH COIL SPRING

OVERHAUL

2601F−11

HINT:

COMPONENTS: See page 26−3.

1. REMOVE FRONT WHEEL

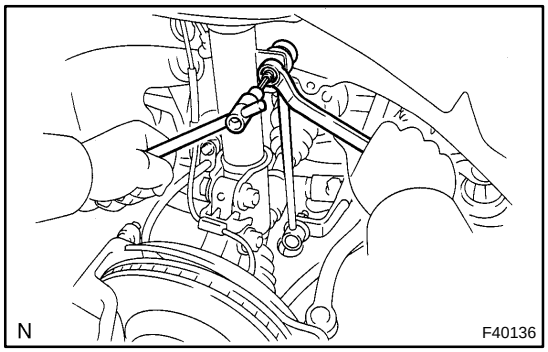

2. DISCONNECT FRONT STABILIZER LINK ASSY LH

(a) Remove the nut and disconnect the front stabilizer link assy LH from the shock absorber assy front LH.

HINT:

If the ball joint turns together with the nut, use a hexagon (6 mm) wrench to hold the stud.

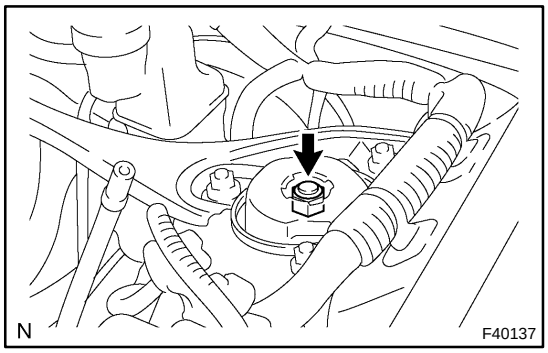

3. REMOVE FRONT SHOCK ABSORBER WITH COIL SPRING

(a) Loosen the lock nut.

NOTICE:

- **Do not loosen except for the case with disassembling the shock absorber assy front LH with coil spring.**
- **Do not remove the lock nut.**

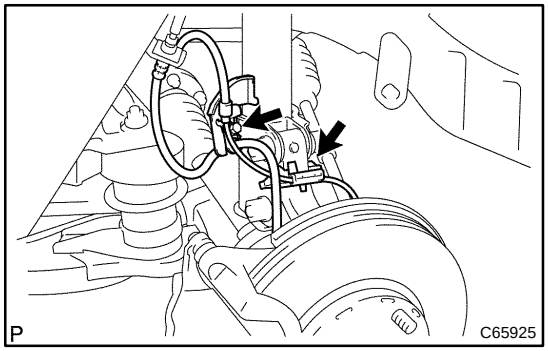

(b) w/ ABS:
Remove the bolt, disconnect the front flexible hose No. 1 and speed sensor front LH.

(c) w/o ABS:
Remove the bolt, disconnect the front flexible hose No. 1.

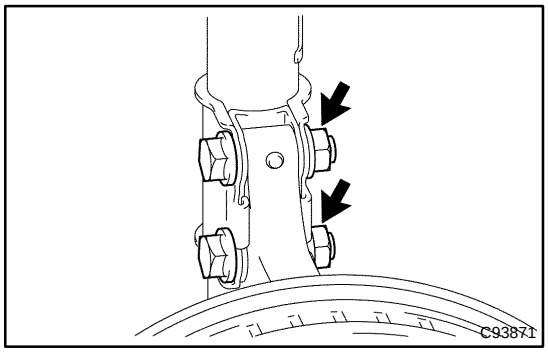

(d) Remove the 2 nuts and 2 bolts on the lower side of front shock absorber with coil spring.

NOTICE:

When removing bolt, stop the bolt from rotating and loosen the nut.

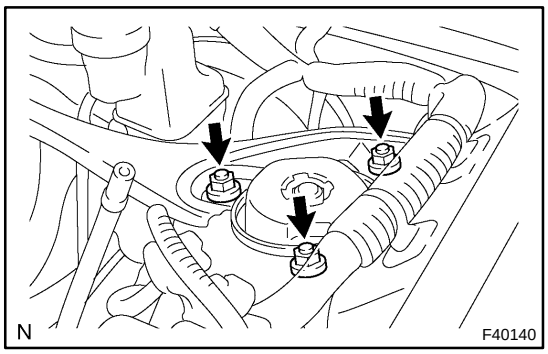

(e) Remove the 3 nuts on the upper side of the front shock absorber with coil spring.
(f) Remove the front shock absorber with the coil spring.

NOTICE:

Be careful not to drop the 2 washers in the case that there is front suspension upper brace center.

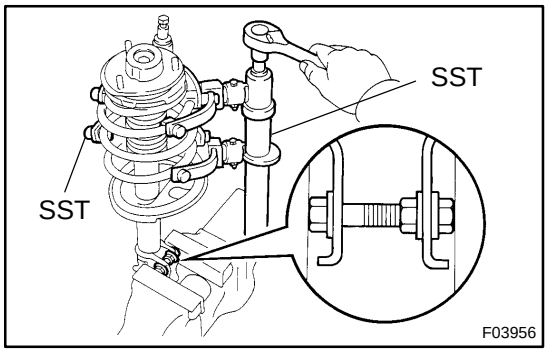

4. FIX FRONT SHOCK ABSORBER WITH COIL SPRING

(a) Install 2 nuts and a bolt to the bracket at the lower side of the front shock absorber with coil spring and secure it in a vise.

5. REMOVE SHOCK ABSORBER ASSY FRONT LH

(a) Using SST, compress the front coil spring LH.
SST 09727−30021

NOTICE:

Do not use an impact wrench. It will damage the SST.

HINT:

Use 2 of the same type of SST.

(b) Remove the front suspension support sub−assy LH, front suspension support bearing LH, front coil spring seat upper LH, front coil spring insulator upper LH, front coil spring LH, front spring bumper LH and front coil spring insulator upper LH.

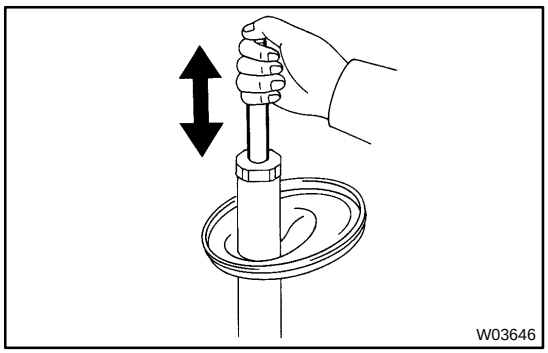

6. INSPECT SHOCK ABSORBER ASSY FRONT LH

(a) Compress and extend the shock absorber rod and check that there is no abnormal resistance or unusual sound during operation.

If there is any abnormality, replace the shock absorber assy front LH with a new one.

NOTICE:

When disposing of the shock absorber assy front LH, see DISPOSAL on page 26−16.

7. INSTALL SHOCK ABSORBER ASSY FRONT LH

(a) Install the front coil spring insulator lower LH onto the shock absorber assy front LH.
(b) Install the front spring bumper LH to the piston rod.

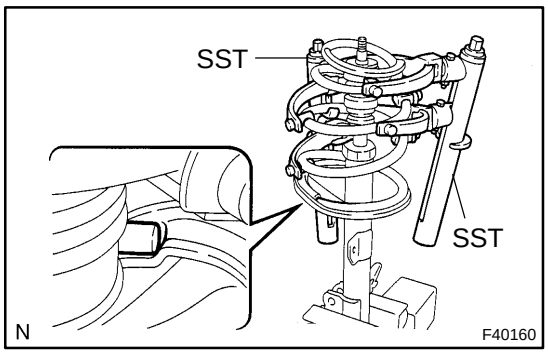

(c) Using SST, compress the front coil spring LH.
SST 09727−30021

NOTICE:

Do not use an impact wrench. It will damage the SST.

HINT:

Use 2 of the same type of SST.

(d) Install the front coil spring LH to the shock absorber assy front LH.

HINT:

Fit the lower end of the front coil spring LH into the gap of the spring lower seat.

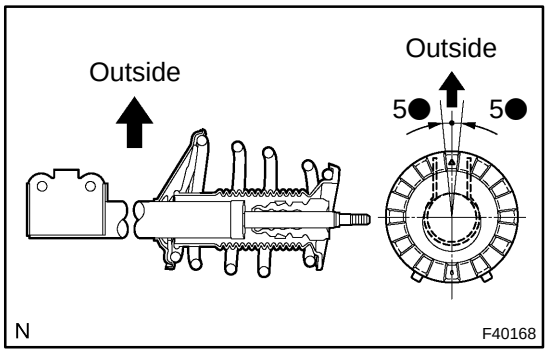

(e) Install the front coil spring insulator upper LH as shown in the illustration.

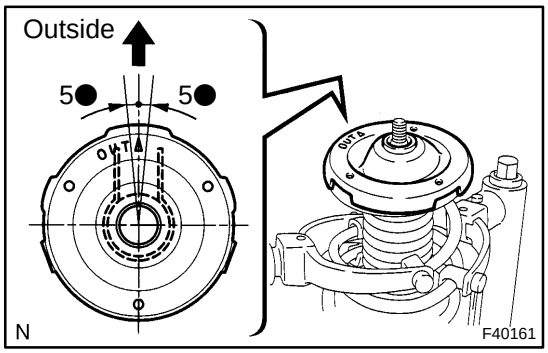

(f) Install the front coil spring seat upper LH to the shock absorber assy front LH with the mark facing to the outside of the vehicle.

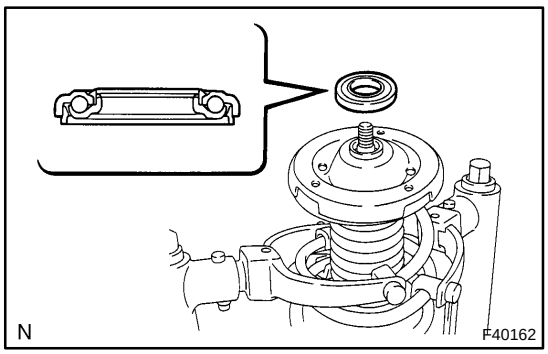

(g) Install a new front suspension support bearing LH.

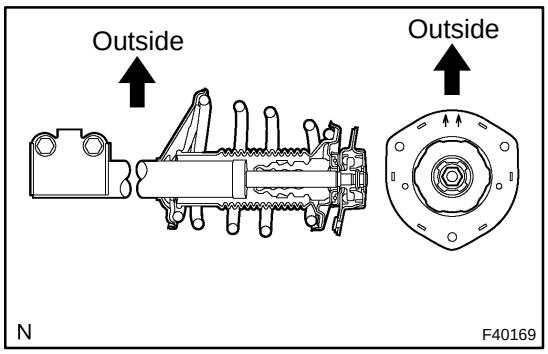

(h) Install the front suspension support sub−assy LH with the mark facing to the outside of the vehicle.

(i) Temporarily tighten the new lock nut.

8. INSTALL FRONT SHOCK ABSORBER WITH COIL SPRING

(a) Install the front shock absorber with coil spring as shown in the illustration.

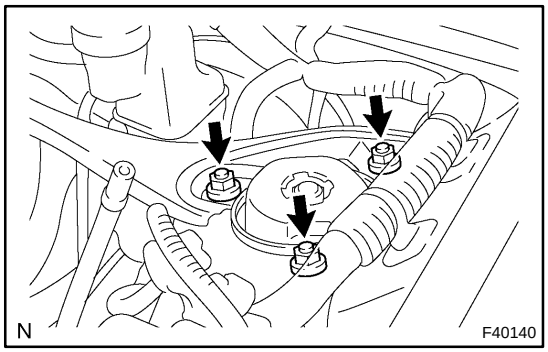

(b) Install the 3 nuts to the upper side of front shock absorber with coil spring.

Torque:
TMC Made:
80 N·m (816 kgf·cm, 59 ft·lbf)
TMMK Made:
85 N·m (867 kgf·cm, 63 ft·lbf)

NOTICE:

Be careful not to drop the 2 washers in the case that there is front suspension upper brace center.

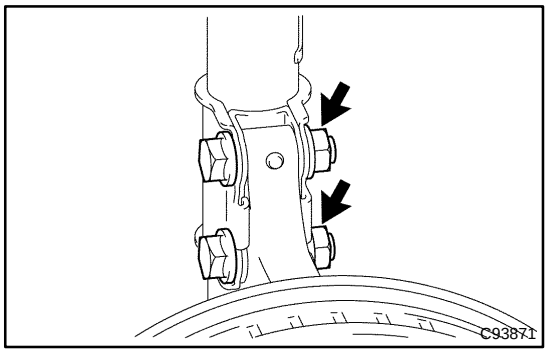

(c) Install the 2 bolts and 2 nuts to the lower side of front shock absorber with coil spring.

Torque: 210 N·m (2,141 kgf·cm, 155 ft·lbf)

NOTICE:

When installing bolt, stop the bolt from rotating and torque the nut.

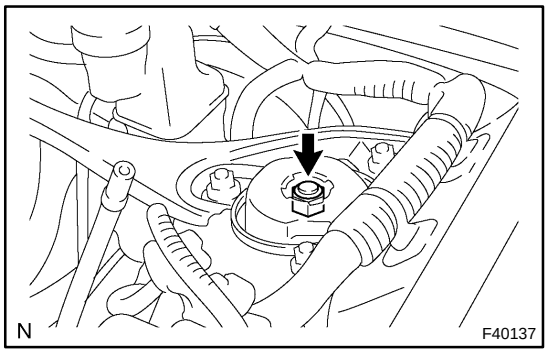

(d) Fully tighten the lock nut.

Torque: 49 N·m (500 kgf·cm, 36 ft·lbf)

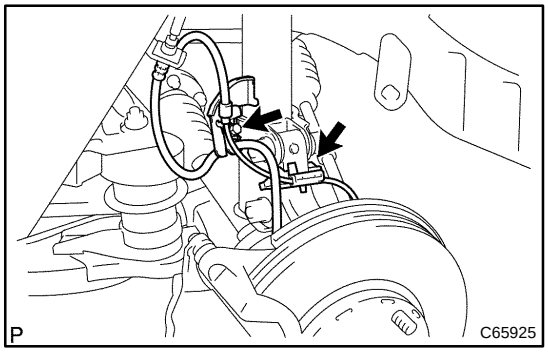

(e) w/ ABS:

Install the front flexible hose No. 1 and speed sensor front LH with the bolt.

Torque: 18.8 N·m (192 kgf·cm, 14 ft·lbf)

(f) w/o ABS:

Install the front flexible hose No. 1 with the bolt.

Torque: 18.8 N·m (192 kgf·cm, 14 ft·lbf)

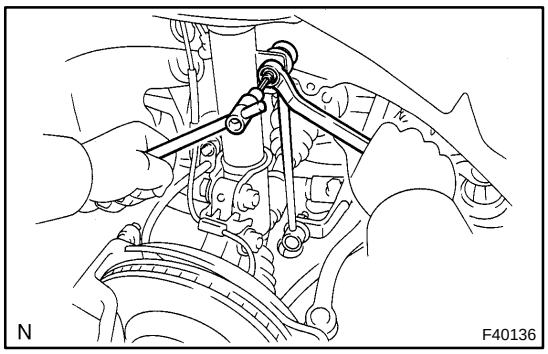

9. INSTALL FRONT STABILIZER LINK ASSY LH

(a) Install the front stabilizer link assy LH with the nut.
Torque: 74 N·m (755 kgf·cm, 55 ft·lbf)

HINT:

If the ball joint turns together with the nut, use a hexagon (6 mm) wrench to hold the stud.

10. INSTALL FRONT WHEEL
Torque: 103 N·m (1,050 kgf·cm, 76 ft·lbf)

11. INSPECT AND ADJUST FRONT WHEEL ALIGNMENT(See page 26−5)

2601G−16

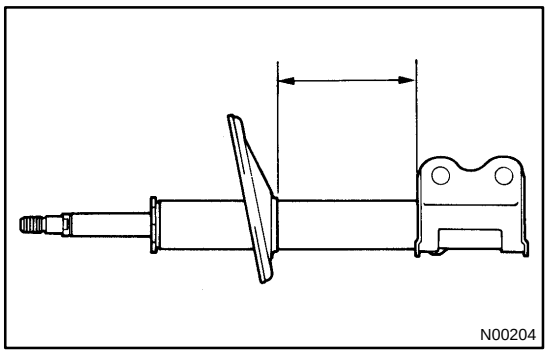

DISPOSAL

HINT:

Dispose the RH side by the same procedures with the LH side.

1. DISPOSE OF SHOCK ABSORBER ASSY FRONT LH

(a) Fully extend the shock absorber rod.

(b) Using a drill, make a hole in the cylinder as shown in the illustration to discharge the gas inside.

CAUTION:

- **When drilling, chips may fly out, work carefully.**
- **The gas is colorless, odorless and non−poisonous.**

FRONT SUSPENSION ARM SUB−ASSY LOWER NO.1 LH

2601H−11

REPLACEMENT

HINT:

COMPONENTS: See page 26−3.

1. REMOVE ENGINE ASSEMBLY WITH TRANSAXLE (1MZ−FE ENGINE TYPE) (See page 14−164)

2. REMOVE ENGINE ASSEMBLY WITH TRANSAXLE (2AZ−FE ENGINE TYPE) (See page 14−29)

3. REMOVE ENGINE ASSEMBLY WITH TRANSAXLE (3MZ−FE ENGINE TYPE) (See page 14−164)

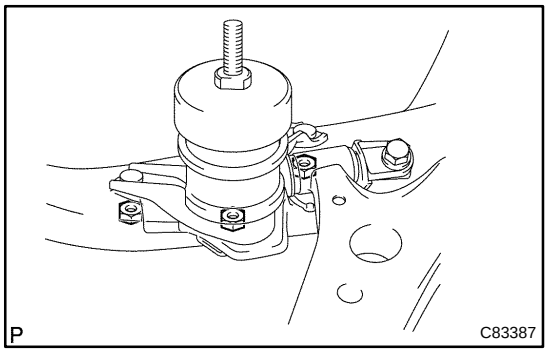

4. REMOVE TRANSVERSE ENGINE ENGINE MOUNTING INSULATOR (A/T TRANSAXLE)

(a) Remove the 3 nuts and the transverse engine engine mounting insulator.

5. REMOVE TRANSVERSE ENGINE ENGINE MOUNTING INSULATOR (M/T TRANSAXLE)

(a) Remove the 3 nuts and the transverse engine engine mounting insulator.

(b) Remove the 4 bolts and bracket from the manual transmission.

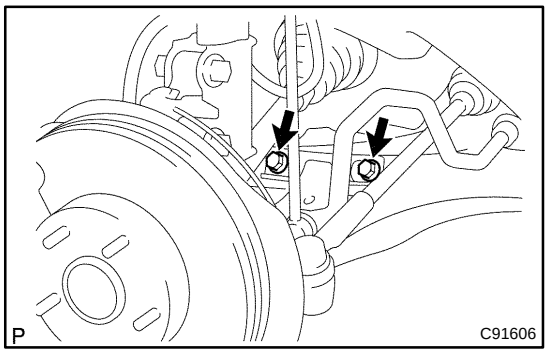

6. REMOVE FRONT SUSPENSION ARM SUB−ASSY LOWER NO.1 LH

(a) Remove the 2 bolts on the front side of the front suspension arm sub−assy lower No. 1 LH.

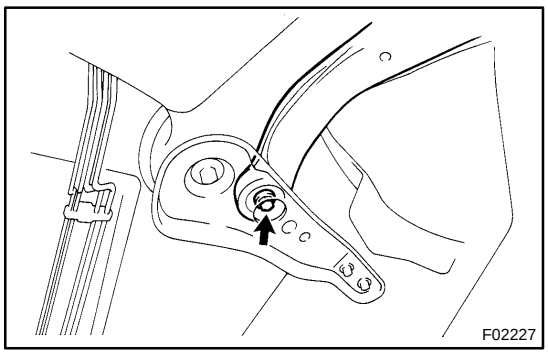

(b) Remove the bolt and nut on the rear side of the front suspension arm sub−assy lower No. 1 LH.

(c) Remove the front suspension arm sub−assy lower No. 1 LH.

(d) Remove the front lower arm bush stopper from the front suspension arm sub−assy lower No. 1 LH.

7. INSTALL FRONT SUSPENSION ARM SUB−ASSY LOWER NO.1 LH

(a) Install the front lower arm bush stopper to the front suspension arm sub−assy lower No. 1 LH.

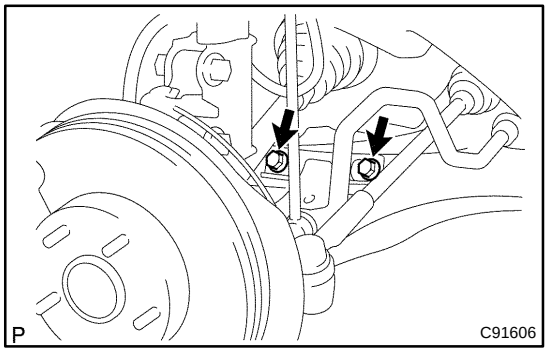

(b) Install the front suspension arm sub−assy lower No. 1 LH with the 2 bolts to the front side.
Torque: 200 N·m (2,039 kgf·cm, 148 ft·lbf)

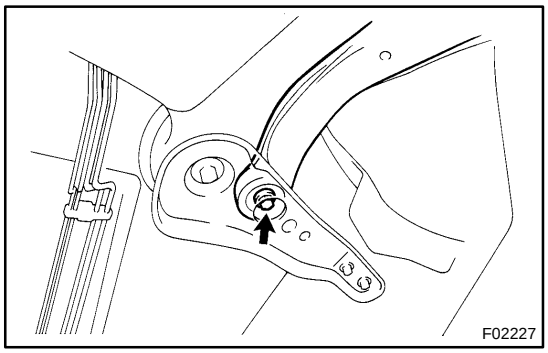

(c) Install the front suspension arm sub−assy lower No. 1 LH with the bolt and nut to the rear side.
Torque: 206 N·m (2,101 kgf·cm, 152 ft·lbf)

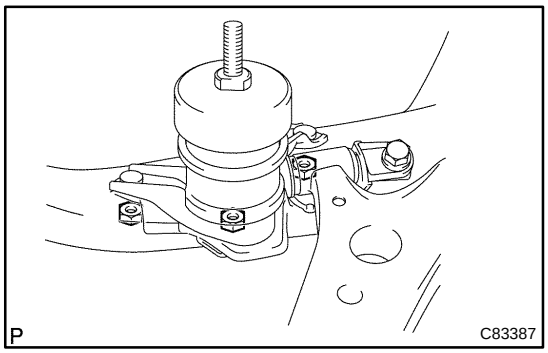

8. INSTALL TRANSVERSE ENGINE ENGINE MOUNTING INSULATOR (A/T TRANSAXLE)

(a) Install the transverse engine engine mounting insulator with the 3 nuts.
Torque: 87 N·m (887 kgf·cm, 64 ft·lbf)

9. INSTALL TRANSVERSE ENGINE ENGINE MOUNTING INSULATOR (M/T TRANSAXLE)

(a) Install the bracket with the 4 bolts to the manual transmission.
Torque: 64 N·m (653 kgf·cm, 47 ft·lbf)

(b) Install the transverse engine engine mounting insulator with the 3 nuts.
Torque: 87 N·m (887 kgf·cm, 64 ft·lbf)

10. INSTALL ENGINE ASSEMBLY WITH TRANSAXLE (2AZ−FE ENGINE TYPE) (See page 14−29)

11. INSTALL ENGINE ASSEMBLY WITH TRANSAXLE (1MZ−FE ENGINE TYPE) (See page 14−164)

12. INSTALL ENGINE ASSEMBLY WITH TRANSAXLE (3MZ−FE ENGINE TYPE) (See page 14−164)

STABILIZER BAR FRONT

REPLACEMENT

2601J−15

HINT:

COMPONENTS: See page 26−3.

1. REMOVE FRONT WHEEL

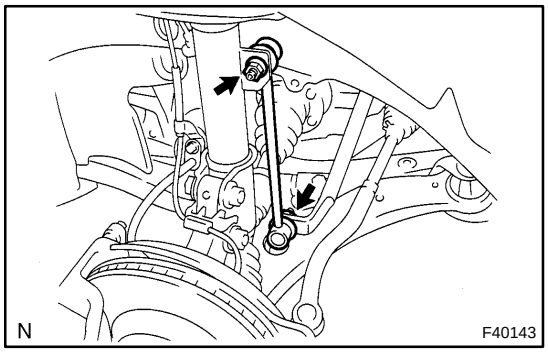

2. REMOVE FRONT STABILIZER LINK ASSY LH

(a) Remove the 2 nuts and front stabilizer link assy LH.

HINT:

If the ball joint turns together with the nut, use a hexagon (6 mm) wrench to hold the stud.

3. REMOVE FRONT STABILIZER LINK ASSY RH

HINT:

Remove the RH side following the same procedures as with the LH side.

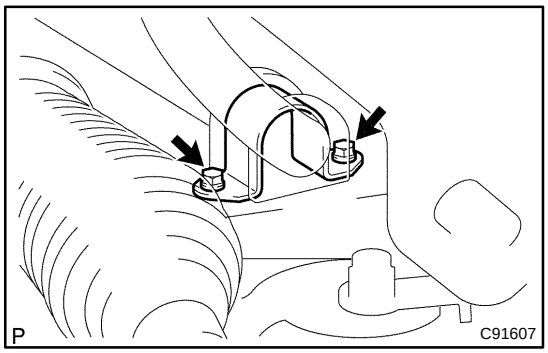

4. REMOVE FRONT STABILIZER BRACKET NO.1 LH

(a) Remove the 2 bolts and front stabilizer bracket No. 1 LH.

5. REMOVE FRONT STABILIZER BRACKET NO.1 RH

HINT:

Remove the RH side by the same procedures with the LH side.

6. DISCONNECT TIE ROD END SUB−ASSY LH (See page 30−8)

SST 09628−62011

7. DISCONNECT TIE ROD END SUB−ASSY RH

SST 09628−62011

HINT:

Disconnect the RH side by the same procedures with the LH side.

8. DISCONNECT STEERING GEAR OUTLET RETURN TUBE (See page 51−28)

SST 09023−00100

9. DISCONNECT PRESSURE FEED TUBE ASSY (See page 51−28)

SST 09023−00100

10. DISCONNECT STEERING INTERMEDIATE SHAFT SUB−ASSY (See page 51−28)

11. REMOVE POWER STEERING GEAR ASSY (See page 51−28)

12. REMOVE STABILIZER BAR FRONT

(a) Remove the stabilizer bar front from the vehicle.

13. REMOVE FRONT STABILIZER BAR BUSH NO.1

(a) Remove the 2 bushes from the stabilizer.

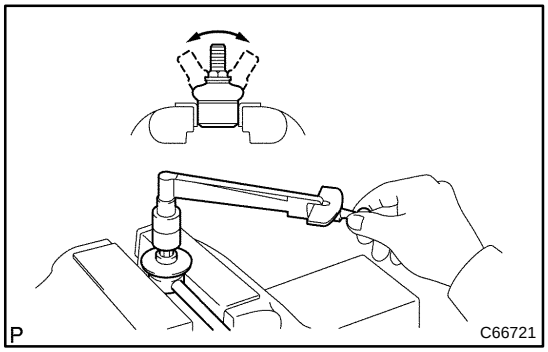

14. INSPECT FRONT STABILIZER LINK ASSY LH

(a) As shown in the illustration, flip the ball joint stud back and forth 5 times, before installing the nut.

(b) Using a torque wrench, turn the nut continuously at a rate of 2 to 4 seconds per 1 turn and take the torque reading on the 5th turn.

Turning torque:
0.05 to 1.96 N·m (0.5 to 20 kgf·cm, 0.4 to 17.4 in.·lbf)

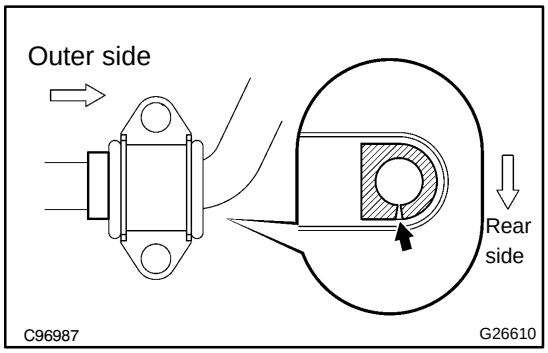

15. INSTALL FRONT STABILIZER BAR BUSH NO.1

HINT:
Install the bush to the outer side of the bush stopper on the stabilizer bar.

16. INSTALL STABILIZER BAR FRONT

(a) Install the stabilizer bar front to the vehicle.

17. INSTALL POWER STEERING GEAR ASSY (See page 51−28)

18. INSTALL STEERING INTERMEDIATE SHAFT SUB−ASSY (See page 51−28)

19. INSTALL PRESSURE FEED TUBE ASSY (See page 51−28)

SST 09023−00100

20. INSTALL STEERING GEAR OUTLET RETURN TUBE (See page 51−28)

SST 09023−00100

21. INSTALL TIE ROD END SUB−ASSY LH (See page 30−8)

22. INSTALL TIE ROD END SUB−ASSY RH

HINT:
Install the RH side following the same procedures as with the LH side.

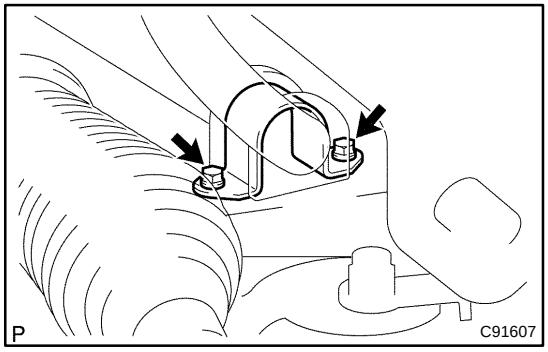

23. INSTALL FRONT STABILIZER BRACKET NO.1 LH

(a) Install the front stabilizer bracket No. 1 LH with the 2 bolts.
Torque: 19 N·m (194 kgf·cm, 14 ft·lbf)

24. INSTALL FRONT STABILIZER BRACKET NO.1 RH

HINT:

Install the RH side following the same procedures as with the LH side.

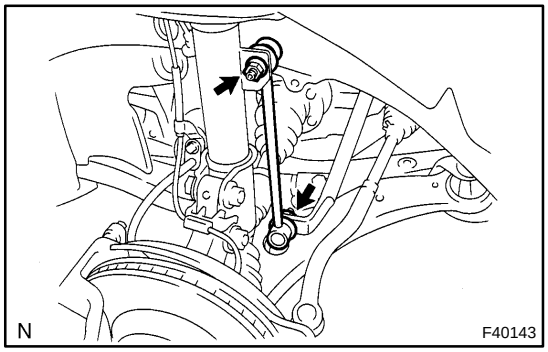

25. INSTALL FRONT STABILIZER LINK ASSY LH

(a) Install the front stabilizer link assy LH with the 2 nuts.
Torque: 74 N·m (755 kgf·cm, 55 ft·lbf)

HINT:

If the ball joint turns together with the nut, use a hexagon (6 mm) wrench to hold the stud.

26. INSTALL FRONT STABILIZER LINK ASSY RH

HINT:

Install the RH side following the same procedures as with the LH side.

27. INSTALL FRONT WHEEL
Torque: 103 N·m (1,050 kgf·cm, 76 ft·lbf)

28. BLEED POWER STEERING FLUID (See page 51−3)

29. CHECK POWER STEERING FLUID LEAKAGE

30. INSPECT AND ADJUST FRONT WHEEL ALIGNMENT (See page 26−5)

REAR SUSPENSION SYSTEM

2701I−14

PROBLEM SYMPTOMS TABLE

Use the table below to help you find the cause of the problem. The numbers indicate the priority of the likely cause of the problem. Check each part in order. If necessary, replace these parts.

Symptom	Suspect Area	See page
Bottoming	1. Vehicle (Overloaded) 2. Spring (Weak) 3. Shock absorber (Worn)	– 27−4 27−4
Sways/pitches	1. Tire (Worn or improperly inflated) 2. Stabilizer bar (Bent or broken) 3. Shock absorber (Worn)	28−1 27−16 27−4
Rear wheel shimmy	1. Tire (Worn or improperly inflated) 2. Wheel (Out of balance) 3. Shock absorber (Worn) 4. Wheel alignment (Incorrect) 5. Hub bearing (Worn)	28−1 28−1 27−4 26−5 27−3 30−2
Abnormal tire wear	1. Tire (Worn or improperly inflated) 2. Wheel alignment (Incorrect) 3. Shock absorber (Worn) 4. Suspension parts (Worn)	28−1 26−5 27−3 27−4 –

REAR SUSPENSION

COMPONENTS

2704V−08

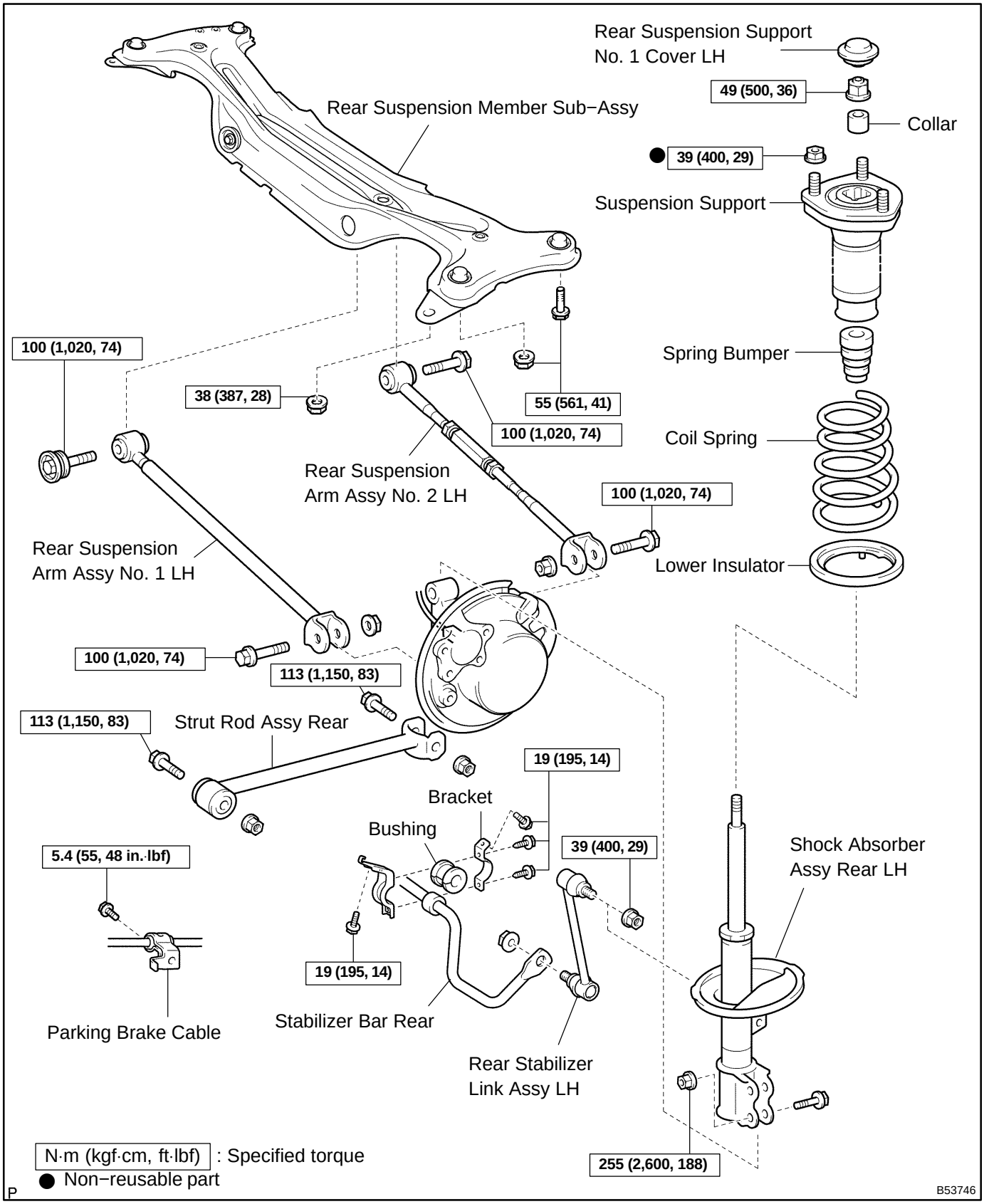

REAR WHEEL ALIGNMENT

2704P−09

ADJUSTMENT

1. INSPECT TIRE (See page 28−1)

2. MEASURE VEHICLE HEIGHT (See page 26−5)

NOTICE:

Before inspecting wheel alignment, adjust the vehicle height to the specified value.

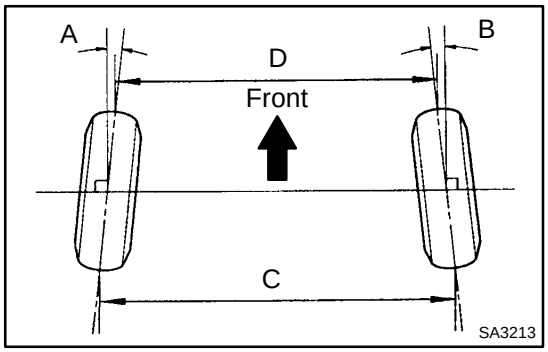

3. INSPECT TOE−IN

Toe−in (total)	A + B: 0°22' ± 11' (0.4° ± 0.2°) C − D: 4 ± 2 mm (0.16 ± 0.08 in.)

HINT:

- Measure "A + B" when "C − D" cannot be measured.
- If toe−in is not within the specified range, adjust No.2 lower suspension arms.

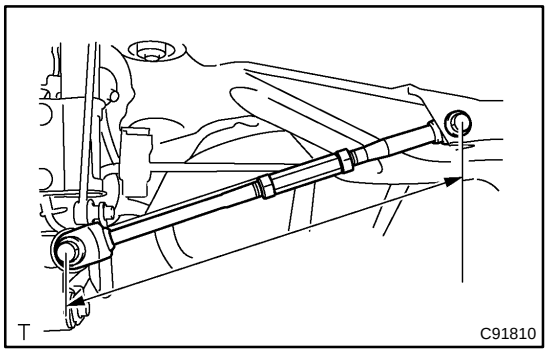

4. ADJUST TOE−IN

(a) Measure the lengths of the right and left No.2 lower suspension arms.

No.2 lower suspension arm length difference:
1.5 mm (0.06 in.) or less

If the left−right difference is larger than 1.5 mm (0.06 in.), adjust it by following the procedures below.

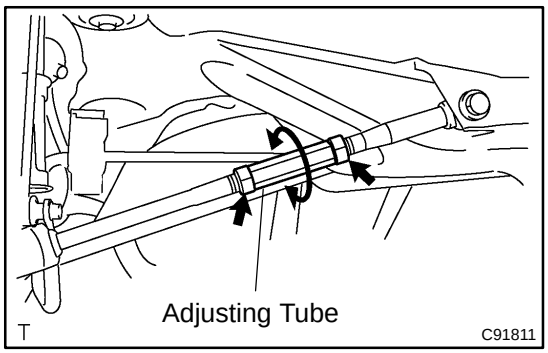

(b) Loosen the 2 lock nuts.

(c) Turn the right and left adjusting tubes by an equal amount to adjust toe−in.

HINT:

- Try to adjust toe−in to the center value.
- One turn of each adjusting tube will adjust toe−in by approximately 1.2 (1 12'), 10.8 mm (0.425 in.).

(d) Torque the 2 lock nuts.

Torque: 56 N·m (570 kgf·cm, 41 ft·lbf)

5. INSPECT CAMBER

	USA, Canada	Mexico
Camber	−1°16' ± 45' (−1.27° ± 0.75°)	−1°09' ± 45' (−1.15° ± 0.75°)
Right−left error	45' (0.75°) or less	45' (0.75°) or less

HINT:

Camber is not adjustable. If the measurement is not within the specification, inspect the suspension parts for damage and/or wear, and replace them if necessary.

SHOCK ABSORBER ASSY REAR LH

2705Y−04

REPLACEMENT

HINT:

COMPONENTS: See page 27−2

1. REMOVE REAR WHEEL

2. REMOVE REAR SEAT CUSHION ASSY (See page 72−32)

3. REMOVE REAR SIDE SEAT BACK ASSY RH (See page 72−32)

4. REMOVE REAR SIDE SEAT BACK ASSY LH

HINT:

Remove the LH side by the same procedures with the RH side.

5. REMOVE ROOF SIDE GARNISH INNER RH (See page 76−22)

6. REMOVE ROOF SIDE GARNISH INNER LH

HINT:

Remove the LH side by the same procedures with the RH side.

7. REMOVE CENTER STOP LAMP ASSY (See page 65−22)

8. REMOVE PACKAGE TRAY TRIM PANEL ASSY

(a) TMC made: (See page 61−13)

(b) TMMK made: (See page 61−16)

9. REMOVE REAR SEAT 3 POINT TYPE BELT ASSY OUTER

(a) TMC made: (See page 61−13)

(b) TMMK made: (See page 61−16)

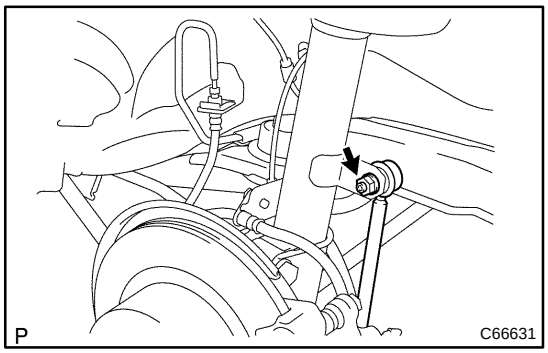

10. SEPARATE REAR STABILIZER LINK ASSY LH

(a) Remove the nut and disconnect the stabilizer bar link from the shock absorber.

HINT:

If the ball joint turns together with the nut, use a hexagon (5 mm) wrench to hold the stud.

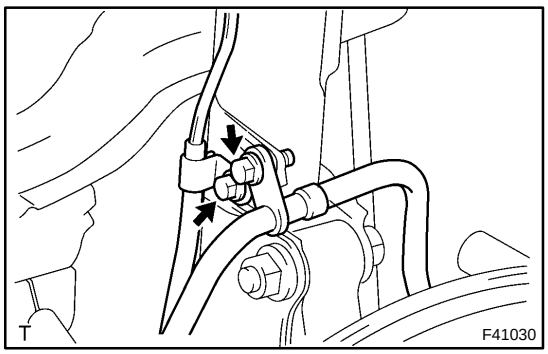

11. REMOVE REAR SHOCK ABSORBER WITH COIL SPRING

(a) Remove the 2 bolts, disconnect the flexible hose and ABS speed sensor wire harness from shock absorber.

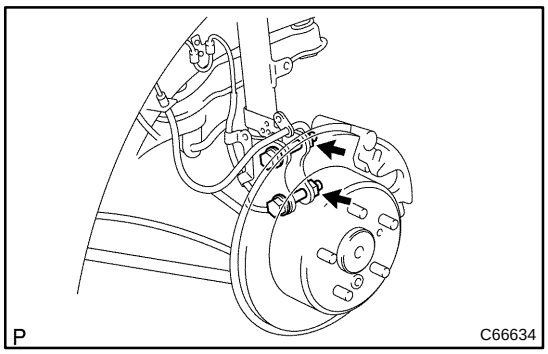

(b) Loosen the 2 nuts on the lower side of the shock absorber.

HINT:

Do not remove the 2 bolts.

(c) Support the rear axle carrier with a jack.

(d) Remove the rear suspension support No. 1 cover LH.

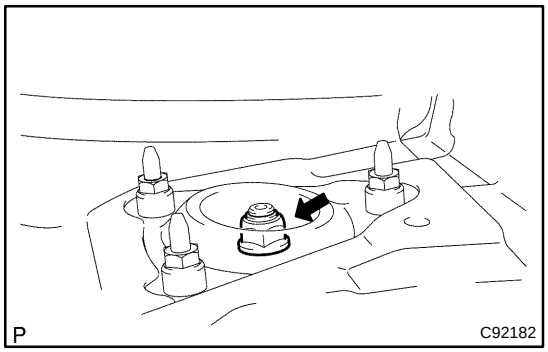

(e) Loosen the suspension support center nut.

NOTICE:

Do not remove the nut.

HINT:

If not disassembling the rear shock absorber, it is not necessary to loosen the nut.

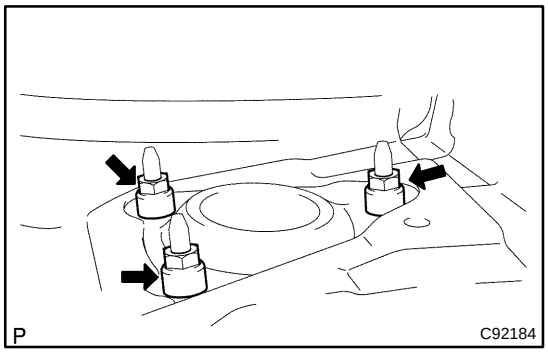

(f) Remove the 3 nuts of the suspension support.

(g) Lower the rear axle carrier and remove the 2 nuts and bolts on the lower side of the shock absorber.

(h) Remove the shock absorber with the coil spring.

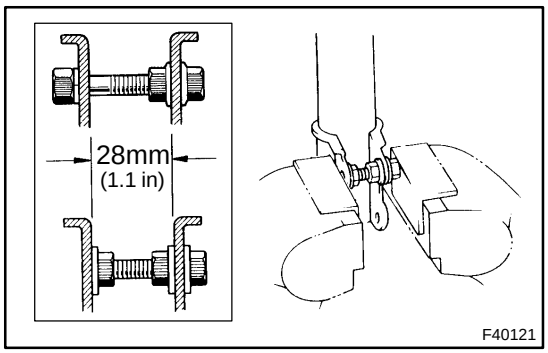

12. FIX REAR SHOCK ABSORBER WITH COIL SPRING

13. REMOVE SHOCK ABSORBER ASSY REAR LH

(a) Install 2 nuts and a bolt to the bracket at the lower part of the shock absorber, and secure it in a vise.

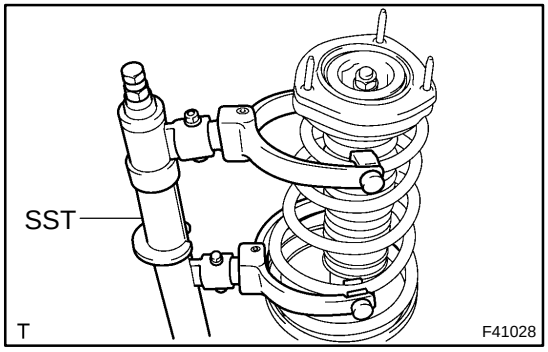

(b) Using SST, compress the coil spring.

SST 09727−30021

NOTICE:

Do not use an impact wrench. It will damage the SST.

(c) Remove the nut, collar and suspension support.

(d) Remove the coil spring, spring bumper and lower insulator.

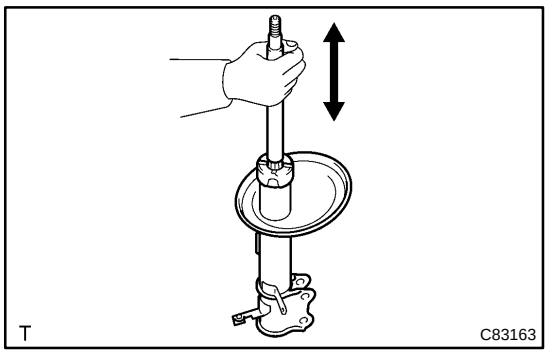

14. INSPECT SHOCK ABSORBER ASSY REAR LH

(a) Compress and extend the shock absorber rod, and check that there is no abnormal resistance or unusual operation sound.

If there is any abnormality, replace the shock absorber with a new one.

NOTICE:

When disposing the shock absorber, see DISPOSAL on page 27−9.

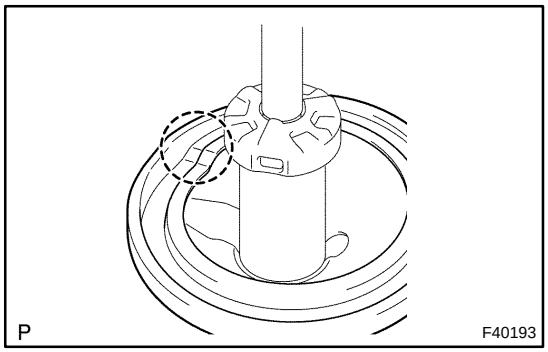

15. INSTALL SHOCK ABSORBER ASSY REAR LH

(a) Install the spring bumper.

(b) Install the lower insulator, as shown in the illustration.

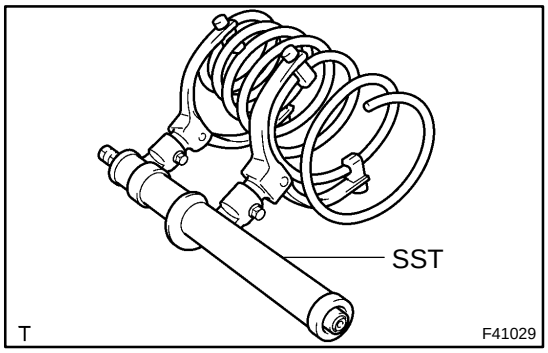

(c) Using SST, compress the coil spring.
SST 09727−30021

NOTICE:

Do not use an impact wrench. It will damage the SST.

(d) Install the coil spring to the shock absorber.

HINT:

- Fit the lower end of the coil spring into the gap of the lower seat.

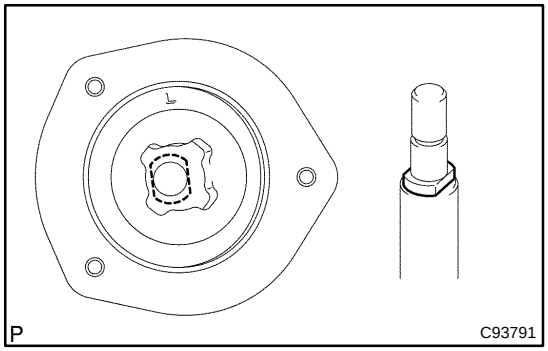

- Check that the 2 flat faces of the piston rod are positioned in parallel with the 2 flat faces of the rear suspension support.

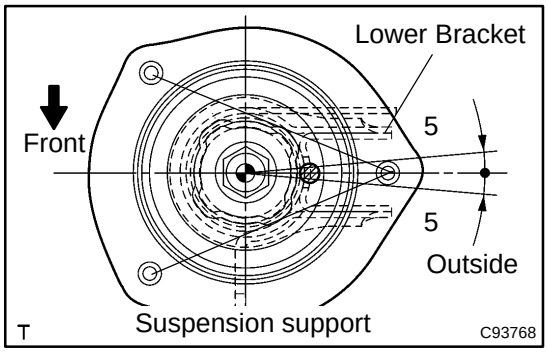

(e) Align the suspension support with the shock absorber lower bracket, as shown in the illustration.

HINT:

Set the suspension support so that the ribbed part of the suspension support faces out side.

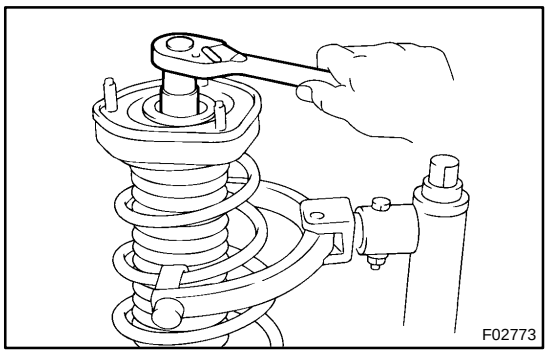

(f) Install the collar to the piston rod.
(g) Temporarily install a new nut.
(h) Remove the SST.
SST 09727−30021

HINT:
After removing SST, recheck the direction of the suspension support.

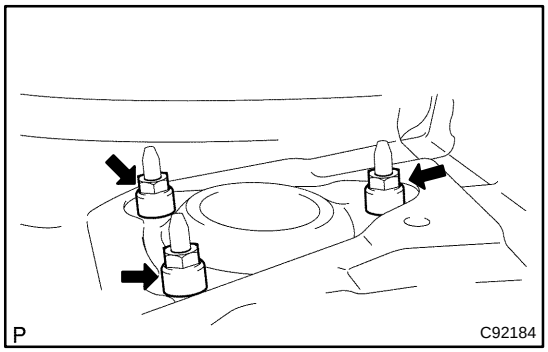

16. INSTALL REAR SHOCK ABSORBER WITH COIL SPRING

(a) Install the shock absorber with the coil spring and 3 nuts.
Torque: 39 N·m (400 kgf·cm, 29 ft·lbf)

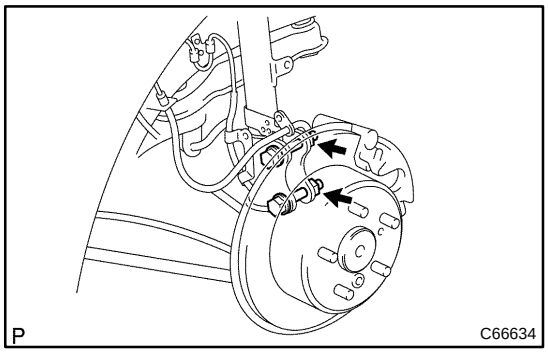

(b) Install the shock absorber with the coil spring, 2 bolts and nuts.
Torque: 255 N·m (2,600 kgf·cm, 188 ft·lbf)

HINT:
Keep the bolt fixed while tightening the nut.

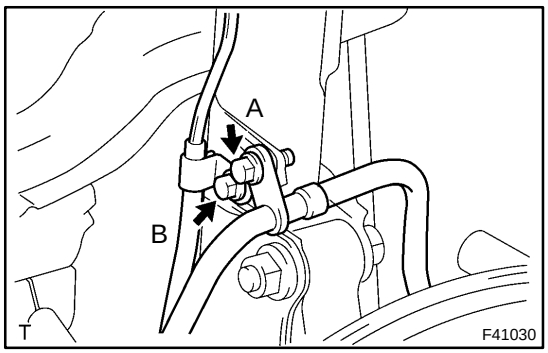

(c) Install the flexible hose and ABS speed sensor wire harness with the 2 bolts.
Torque:
A: Flexible hose: 19 N·m (194 kgf·cm, 14 ft·lbf)
B: ABS speed sensor wire harness:
5.5 N·m (56 kgf·cm, 49 in·lbf)

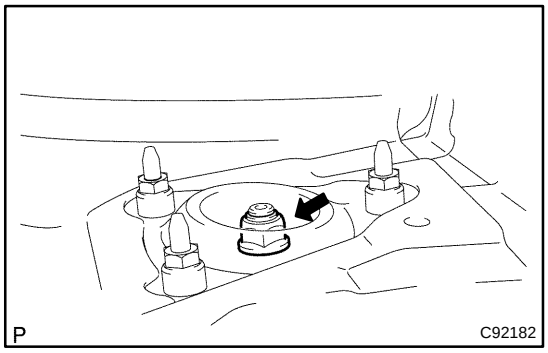

(d) Tighten the nut in the center of suspension support.
Torque: 49 N·m (500 kgf·cm, 36 ft·lbf)

HINT:
If the shock absorber has not been disassembled, it is necessary to torque the nut.

(e) Install the rear suspension support No. 1cover LH.

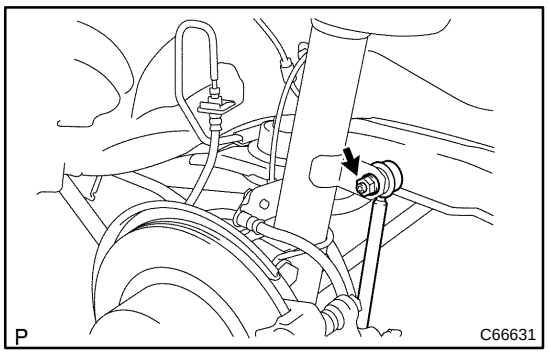

17. INSTALL REAR STABILIZER LINK ASSY LH

(a) Install the stabilizer bar link to the shock absorber with the nut.

Torque: 39 N·m (400 kgf·cm, 29 ft·lbf)

HINT:

If the ball joint turns together with the nut, use a hexagon (5 mm) wrench to hold the stud.

18. INSTALL REAR SEAT 3 POINT TYPE BELT ASSY OUTER

(a) TMC made: (See page 61−13)

(b) TMMK made: (See page 61−16)

19. INSTALL REAR SIDE SEAT BACK ASSY RH (See page 72−32)

20. INSTALL REAR SIDE SEAT BACK ASSY LH

HINT:

Install the LH side by the same procedures with the RH side.

21. INSTALL REAR WHEEL

Torque: 103 N·m (1,050 kgf·cm, 76 ft·lbf)

22. INSPECT REAR WHEEL ALIGNMENT (See page 27−3)

2701L−14

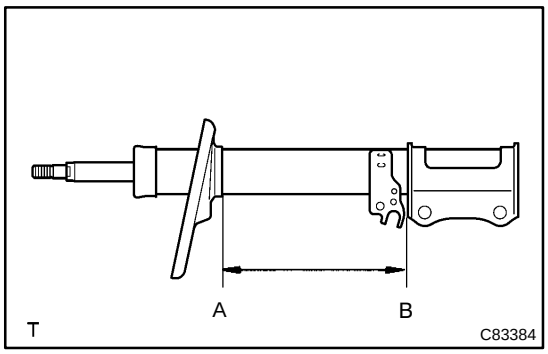

DISPOSAL

1. DISPOSE OF SHOCK ABSORBER ASSY REAR LH

(a) Fully extend the shock absorber rod.

(b) Using a drill, make a hole in the cylinder as shown in the illustration to discharge the gas inside.

CAUTION:

- **When drilling, chips may fly out, work carefully.**
- **The gas is colorless, odorless and non−poisonous.**

REAR SUSPENSION ARM ASSY NO.1 LH

2705Z−06

REPLACEMENT

HINT:

COMPONENTS: See page 27−2

1. REMOVE REAR WHEEL

2. REMOVE EXHAUST PIPE ASSY CENTER

(a) 1MZ−FE / 3MZ−FE engine: See page 15−7

(b) 2AZ−FE engine: See page 15−3

3. REMOVE STABILIZER BAR REAR (See page 27−16)

4. SEPARATE STRUT ROD ASSY REAR (See page 27−18)

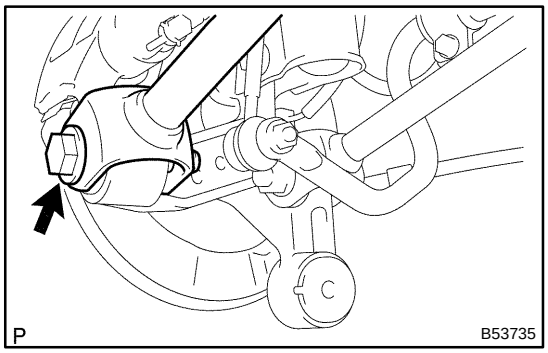

5. SEPARATE REAR SUSPENSION ARM ASSY NO.2 LH

(a) Remove the bolt, nut and rear suspension arm No. 2 (outer side) from the rear carrier.

HINT:

Keep the nut fixed while loosening and removing the bolt.

6. SEPARATE REAR SUSPENSION ARM ASSY NO.2 RH

HINT:

Separate the RH side by the procedures with the LH side.

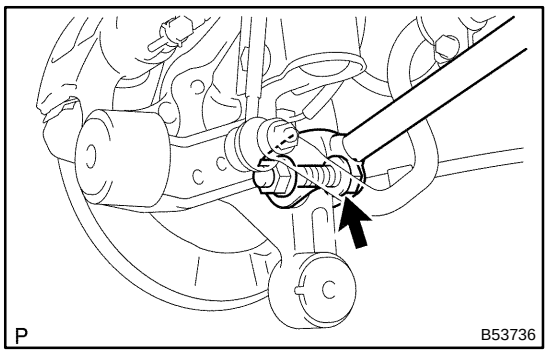

7. SEPARATE REAR SUSPENSION ARM ASSY NO.1 LH

(a) Remove the bolt, nut and rear suspension arm No. 1 (outer side) from rear axle carrier.

HINT:

Keep the nut fixed while loosening and removing the bolt.

8. SEPARATE REAR SUSPENSION ARM ASSY NO.1 RH

HINT:

Separate the RH side by the procedures with the LH side.

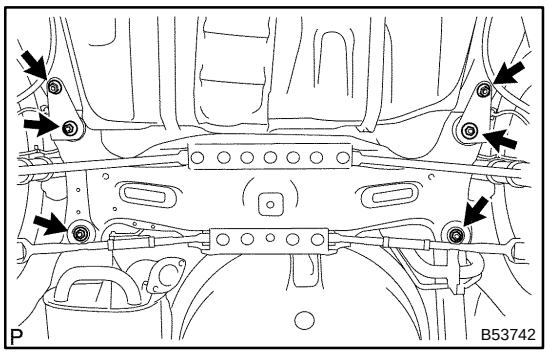

9. REMOVE REAR SUSPENSION MEMBER SUB−ASSY

(a) Support the rear suspension member with a jack.

(b) Remove the 4 nuts, 2 bolts and 4 retainers from the rear suspension member.

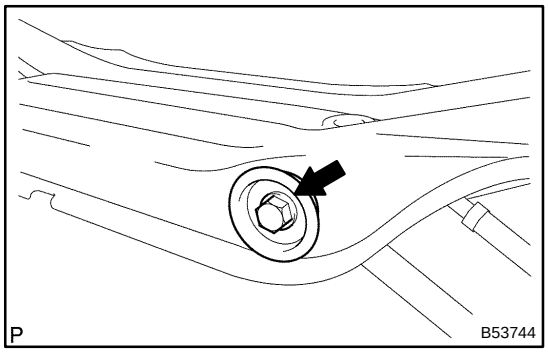

10. REMOVE REAR SUSPENSION ARM ASSY NO.1 LH

(a) Lower the rear suspension member.

(b) Remove the bolt and lower suspension arm No. 1.

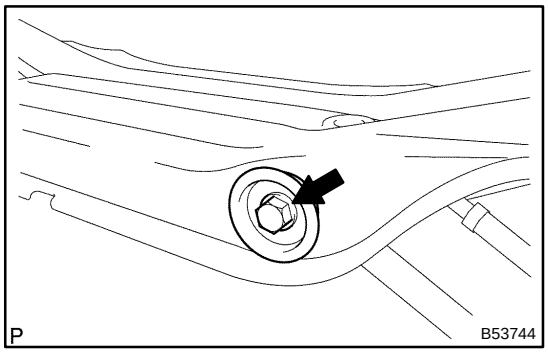

11. INSTALL REAR SUSPENSION ARM ASSY NO.1 LH

(a) Install the lower suspension No. 1 with the bolt, nut and temporary tighten the bolt.

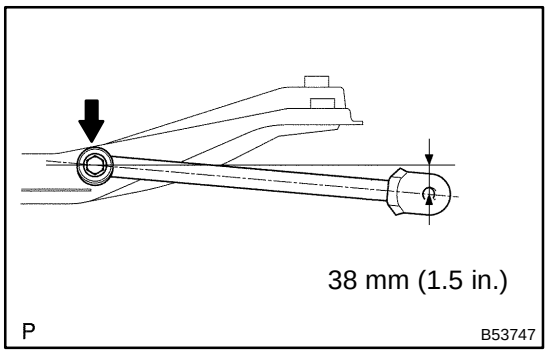

(b) Set suspension arm in the position shown in the illustration and fully tighten the bolt.

Torque: 100 N·m (1,020 kgf·cm, 74 ft·lbf)

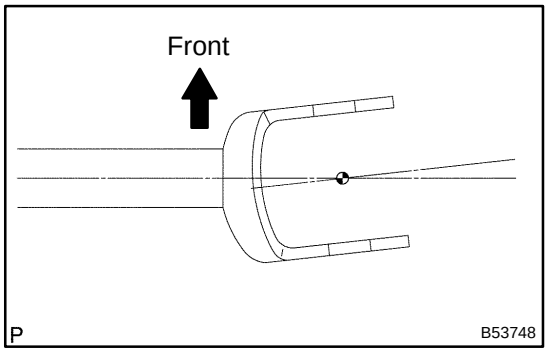

HINT:

Install the lower suspension No. 1 so that the bracket leans toward the front of the vehicle, as shown in the illustration.

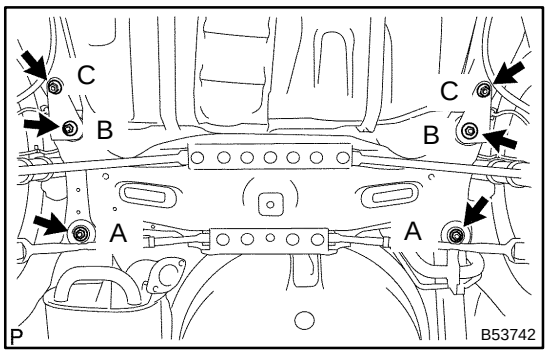

12. INSTALL REAR SUSPENSION MEMBER SUB−ASSY

(a) Support the rear suspension member with a jack.

(b) Install the rear suspension member with the 4 nuts, 2 bolts and 4 retainers.

Torque:
A, B: 55 N·m (561 kgf·cm, 41 ft·lbf)
C: 38 N·m (387 kgf·cm, 28 ft·lbf)

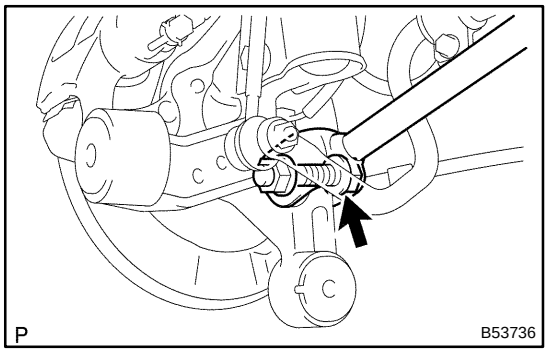

13. TEMPORARILY TIGHTEN REAR SUSPENSION ARM ASSY NO.1 LH

(a) Connect the rear suspension arm No. 1 (outer side) to the rear axle carrier with the bolt and nut, and temporarily tighten the bolt and nut.

HINT:
Insert the bolt from the front side of the vehicle and temporarily install the bolt.

14. TEMPORARILY TIGHTEN REAR SUSPENSION ARM ASSY NO.1 RH

HINT:
Temporarily tighten the RH side by the procedures with the LH side.

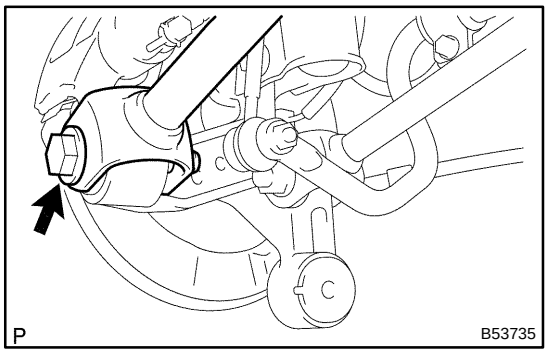

15. TEMPORARILY TIGHTEN REAR SUSPENSION ARM ASSY NO.2 LH

(a) Connect the rear suspension arm No. 2 (outer side) to the rear axle carrier with the bolt and nut, and temporarily tighten the bolt.

HINT:
Insert the bolt from the rear side of the vehicle and temporarily install the bolt.

16. TEMPORARILY TIGHTEN REAR SUSPENSION ARM ASSY NO.2 RH

HINT:
Temporarily tighten the RH side by the procedures with the LH side.

17. TEMPORARILY TIGHTEN STRUT ROD ASSY REAR (See page 27−18)

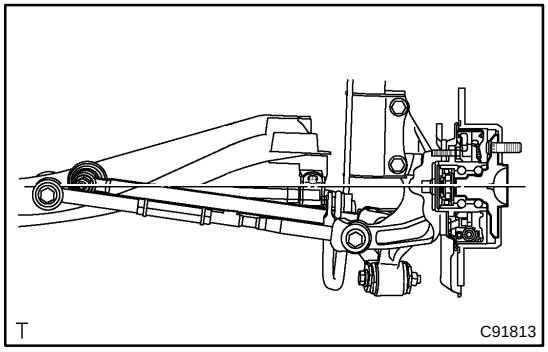

18. STABILIZE SUSPENSION

(a) Jack up the rear axle carrier, placing a wood block between them. Apply load to the suspension so that the installed bolt of the suspension arm assy No. 1 (vehicle side) is horizontally aligned with the center of the rear axle hub.

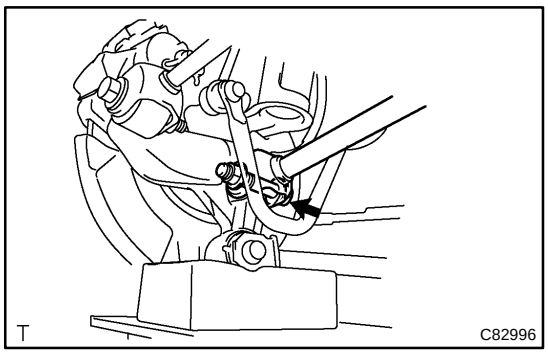

19. FULLY TIGHTEN REAR SUSPENSION ARM ASSY NO.1 LH

(a) Fully tighten the bolt.
Torque: 100 N·m (1,020 kgf·cm, 74 ft·lbf)

HINT:
Keep the nut fixed while tightening the bolt.

20. FULLY TIGHTEN REAR SUSPENSION ARM ASSY NO.1 RH

HINT:
Fully tighten the RH side by the procedures with the LH side.

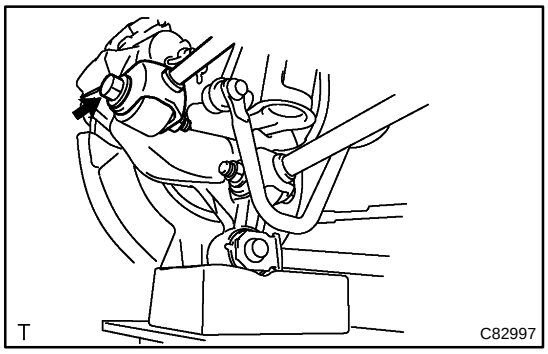

21. FULLY TIGHTEN REAR SUSPENSION ARM ASSY NO.2 LH

(a) Fully tighten the bolt.
Torque: 100 N·m (1,020 kgf·cm, 74 ft·lbf)

HINT:
Keep the nut fixed while tightening the bolt.

22. FULLY TIGHTEN REAR SUSPENSION ARM ASSY NO.2 RH

HINT:
Fully tighten the RH side by the procedures with the LH side.

23. FULLY TIGHTEN STRUT ROD ASSY REAR (See page 27−18)

24. INSTALL STABILIZER BAR REAR (See page 27−16)

25. INSTALL EXHAUST PIPE ASSY CENTER

(a) 1MZ−FE / 3MZ−FE engine: See page 15−7
(b) 2AZ−FE engine: See page 15−3

26. INSTALL REAR WHEEL
Torque: 103 N·m (1,050 kgf·cm, 76 ft·lbf)

27. INSPECT REAR WHEEL ALIGNMENT (See page 27−3)

REAR SUSPENSION ARM ASSY NO.2 LH

27060−06

REPLACEMENT

HINT:

COMPONENTS: See page 27−2

1. REMOVE REAR WHEEL

2. REMOVE EXHAUST PIPE ASSY CENTER

(a) 1MZ−FE / 3MZ−FE engine: See page 15−7

(b) 2AZ−FE engine: See page 15−3

3. REMOVE STABILIZER BAR REAR (See page 27−16)

4. SEPARATE REAR SUSPENSION ARM ASSY NO.1 LH (See page 27−10)

5. SEPARATE REAR SUSPENSION ARM ASSY NO.1 RH

HINT:

Separate the RH side by the procedures with the LH side.

6. SEPARATE REAR SUSPENSION ARM ASSY NO.2 LH (See page 27−10)

7. SEPARATE REAR SUSPENSION ARM ASSY NO.2 RH

HINT:

Separate the RH side by the procedures with the LH side.

8. SEPARATE STRUT ROD ASSY REAR (See page 27−18)

9. REMOVE REAR SUSPENSION MEMBER SUB−ASSY (See page 27−10)

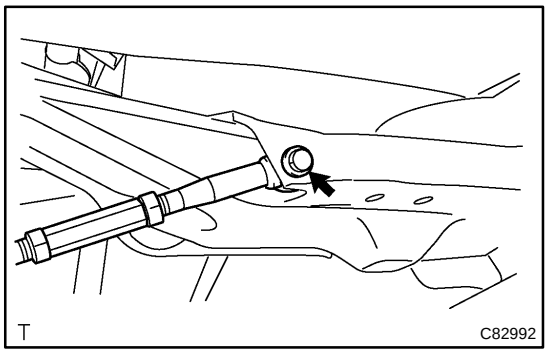

10. REMOVE REAR SUSPENSION ARM ASSY NO.2 LH

(a) Remove the bolt and disconnect the rear suspension arm No. 2 (inner side).

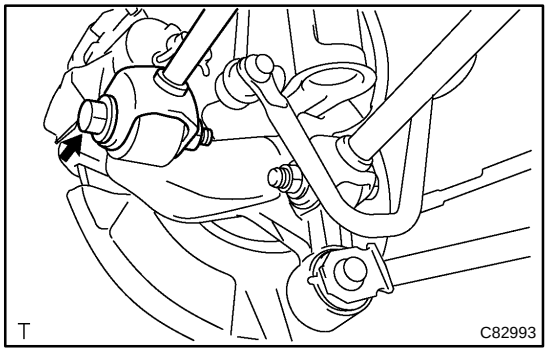

(b) Remove the bolt, nut and the rear suspension arm No. 2 (outer side) from rear axle carrier.

HINT:

Keep the nut fixed while loosening and removing the bolt.

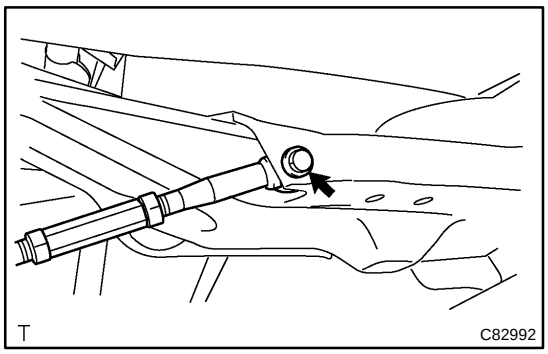

11. INSTALL REAR SUSPENSION ARM ASSY NO.2 LH

(a) Install the rear suspension arm No. 2 (inner side) with the bolt and temporarily tighten the bolt.

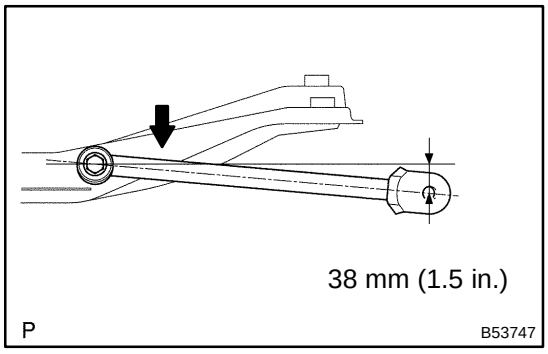

(b) Set the suspension arm in the position in the illustration and fully tighten the bolt.
Torque: 100 N·m (1,020 kgf·cm, 74 ft·lbf)

12. INSTALL REAR SUSPENSION MEMBER SUB−ASSY (See page 27−10)
13. TEMPORARILY TIGHTEN REAR SUSPENSION ARM ASSY NO.1 LH (See page 27−10)
14. TEMPORARILY TIGHTEN REAR SUSPENSION ARM ASSY NO.1 RH
HINT:
Temporarily tighten the RH side by the procedures with the LH side.
15. TEMPORARILY TIGHTEN REAR SUSPENSION ARM ASSY NO.2 LH (See page 27−10)
16. TEMPORARILY TIGHTEN REAR SUSPENSION ARM ASSY NO.2 RH
HINT:
Temporarily tighten the RH side by the procedures with the LH side.
17. TEMPORARILY TIGHTEN STRUT ROD ASSY REAR (See page 27−18)
18. INSTALL STABILIZER BAR REAR (See page 27−16)
19. STABILIZE SUSPENSION (See page 27−10)
20. FULLY TIGHTEN REAR SUSPENSION ARM ASSY NO.1 LH (See page 27−10)
21. FULLY TIGHTEN REAR SUSPENSION ARM ASSY NO.1 RH
HINT:
Fully tighten the RH side by the procedures with the LH side.
22. FULLY TIGHTEN REAR SUSPENSION ARM ASSY NO.2 LH (See page 27−10)
23. FULLY TIGHTEN REAR SUSPENSION ARM ASSY NO.2 RH
HINT:
Fully tighten the RH side by the procedures with the LH side.
24. FULLY TIGHTEN STRUT ROD ASSY REAR (See page 27−18)
25. INSTALL EXHAUST PIPE ASSY CENTER
(a) 1MZ−FE / 3MZ−FE engine: See page 15−7
(b) 2AZ−FE engine: See page 15−3
26. INSTALL REAR WHEEL
Torque: 103 N·m (1,050 kgf·cm, 76 ft·lbf)
27. INSPECT REAR WHEEL ALIGNMENT (See page 27−3)

STABILIZER BAR REAR

REPLACEMENT

27061−04

HINT:

COMPONENTS: See page 27−2

1. REMOVE REAR WHEEL

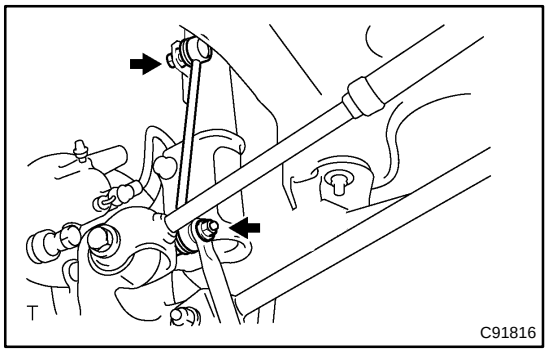

2. REMOVE REAR STABILIZER LINK ASSY LH

(a) Remove the 2 nuts and stabilizer bar link.

HINT:

If the ball joint turns together with the nut, use a hexagon wrench (5 mm) to hold the stud.

3. REMOVE REAR STABILIZER LINK ASSY RH

HINT:

Remove the RH side by the same procedures with the LH side.

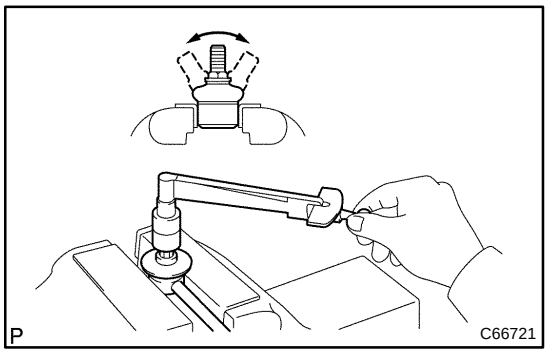

4. INSPECT REAR STABILIZER LINK ASSY LH

(a) As shown in the illustration, flip the ball joint stud back and forth 5 times, before installing the nut.

(b) Using a torque wrench, turn the nut continuously at a rate of 2 − 4 seconds per 1 turn and take the torque reading on the 5th turn.

Turning torque:

0.05 − 1.0 N·m (0.5 − 10 kgf·cm, 0.4 − 8.7 in.·lbf)

5. REMOVE STABILIZER BAR REAR

(a) Remove the 8 bolts, 2 No. 1 brackets and 2 bushings.

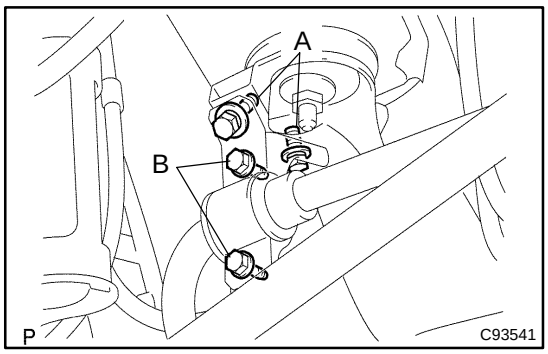

6. INSTALL STABILIZER BAR REAR

(a) Install the bushing and bracket with the 4 bolts (LH side).
Torque: 19 N·m (195 kgf·cm, 14 ft·lbf)

HINT:

- 2 types of bolts (A, B) are used, so make sure the correct bolts are installed.

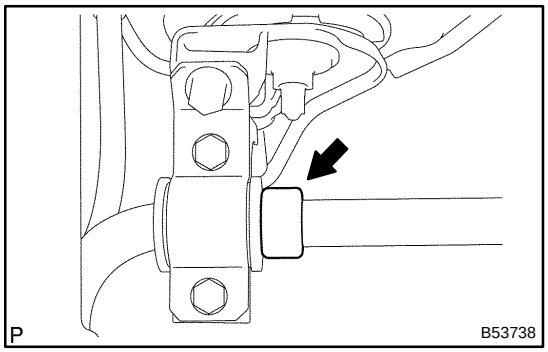

- Install the bushing to the inner side of the bushing stopper on the stabilizer bar.

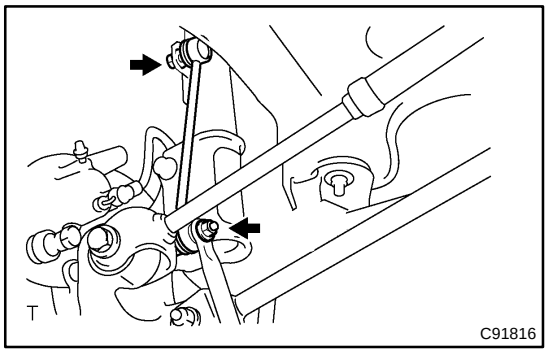

7. INSTALL REAR STABILIZER LINK ASSY LH

(a) Remove the 2 nuts and stabilizer bar link.
Torque: 39 N·m (400 kgf·cm, 29 ft·lbf)

HINT:

If the ball joint turns together with the nut, use a hexagon (5 mm) wrench to hold the stud.

8. INSTALL REAR STABILIZER LINK ASSY RH

HINT:

Install the RH side by the same procedures with the LH side.

9. INSTALL REAR WHEEL
Torque: 103 N·m (1,050 kgf·cm, 76 ft·lbf)

STRUT ROD ASSY REAR

REPLACEMENT

2704T−05

HINT:

COMPONENTS: See page 27−2

1. REMOVE REAR WHEEL

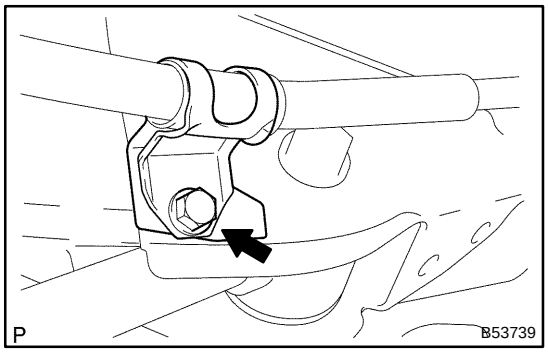

2. REMOVE STRUT ROD ASSY REAR

(a) Remove the bolt, nut and disconnect the parking brake cable.

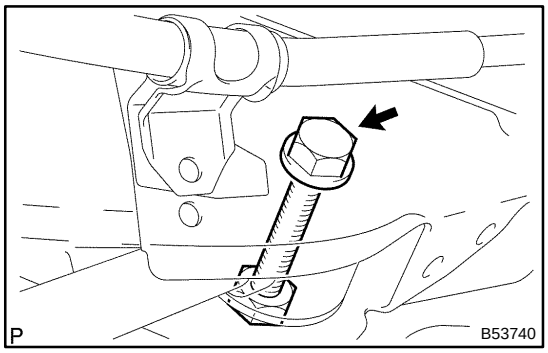

(b) Remove the bolt, nut and disconnect the strut rod (front side).

HINT:

Keep the nut fixed while loosening and removing the bolt.

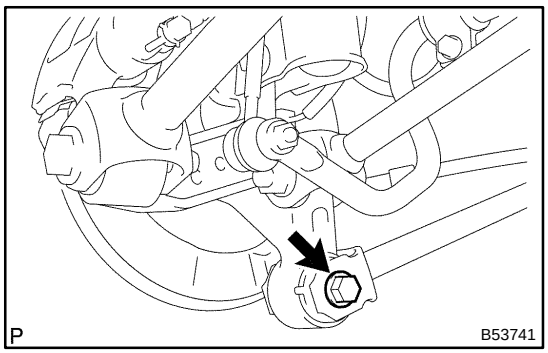

(c) Remove the bolt, nut and strut rod from rear axle carrier.

HINT:

Keep the nut fixed while loosening and removing the bolt.

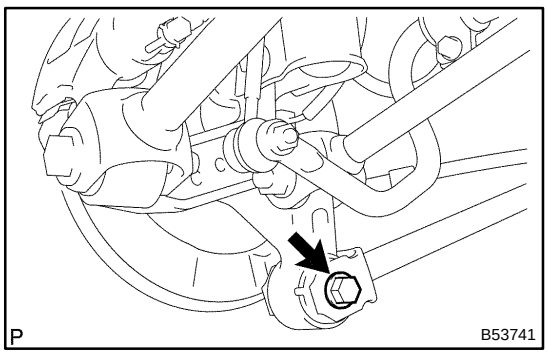

3. TEMPORARILY TIGHTEN STRUT ROD ASSY REAR

(a) Install the strut rod (rear side), bolt nut and temporarily tighten the bolt.

HINT:

- Insert the bolt from the inner side of the vehicle and temporarily install the bolt.
- Keep the nut fixed while tightening the bolt.

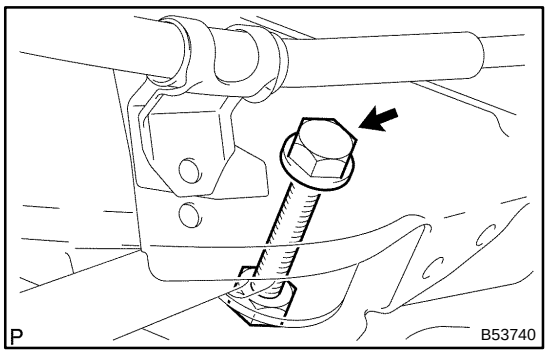

(b) Connect the strut rod (inner side) with the bolt.
Torque: 113 N·m (1,150 kgf·cm, 83 ft·lbf)

HINT:
Keep the nut fixed while tightening the bolt.

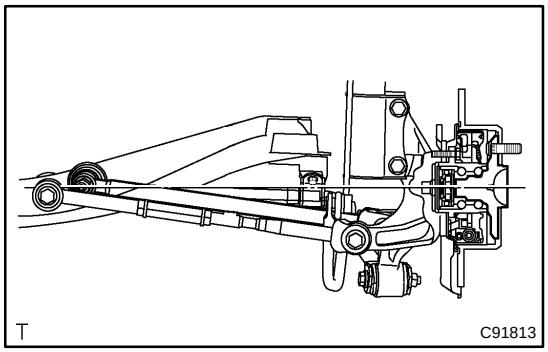

4. STABILIZE SUSPENSION

(a) Jack up the rear axle carrier, placing a wood block between them. Apply load to the suspension so that the installed bolt of the suspension arm assy No. 1 (vehicle side) is horizontally aligned with the center of the rear axle hub.

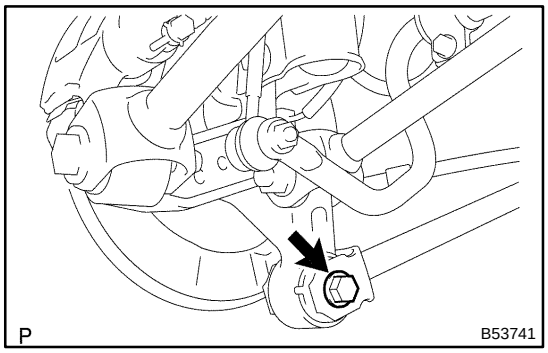

5. FULLY TIGHTEN STRUT ROD ASSY REAR

(a) Fully tighten the bolt.
Torque: 113 N·m (1,152 kgf·cm, 83 ft·lbf)

HINT:
Keep the nut fixed while tightening the bolt.

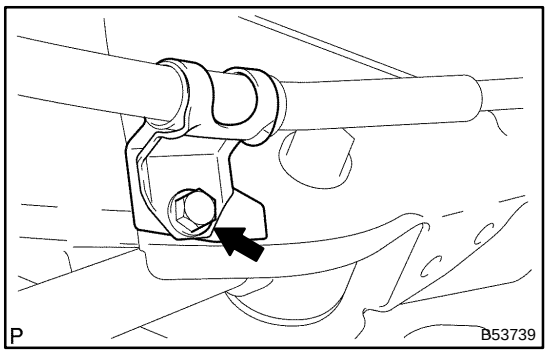

(b) Install the parking brake cable with the bolt and nut.
Torque: 5.4 N·m (55 kgf·cm, 48 in.·lbf)

6. INSTALL REAR WHEEL
Torque: 103 N·m (1,050 kgf·cm, 76 ft·lbf)

7. INSPECT REAR WHEEL ALIGNMENT (See page 27−3)

WHEEL AND TIRE SYSTEM

2805N−01

INSPECTION

1. INSPECT TIRE

(a) Check the tires for wear and proper inflation pressure.
Cold tire inflation pressure:

Tire size	Front, Rear kPa (kgf/cm^2, psi)
P205/65R15 92T P205/65R15 92H 205/65R15 94V P215/60R16 94V	200 (2.0, 29)
P215/55R17 93V	210 (2.1, 30)

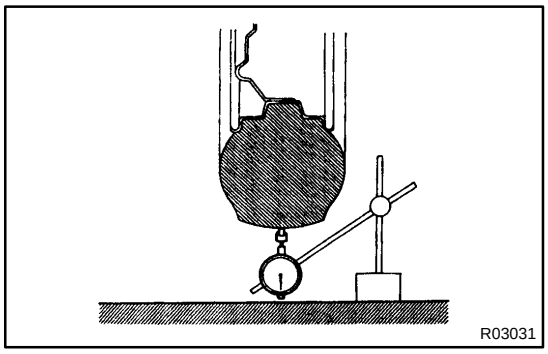

(b) Using a dial indicator, check the tire runout.
Tire runout: 1.0 mm (0.039 in.) or less

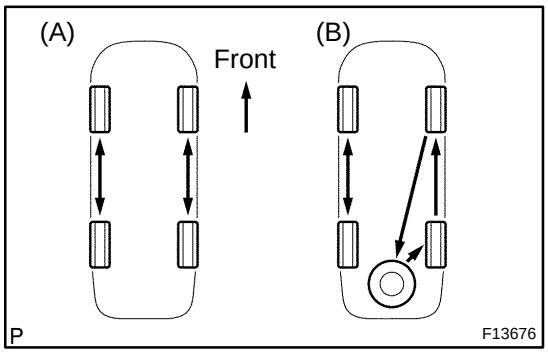

2. ROTATE TIRES

HINT:

- Rotate tires as shown in the illustration.
- Rotate as shown in (B) if the spare tire is included in the rotation.

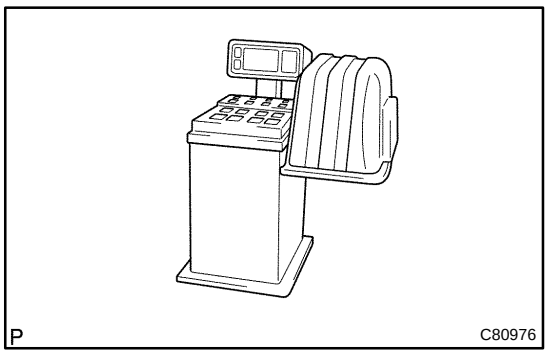

3. INSPECT WHEEL BALANCE

(a) Check and adjust the Off−the−car balance.
(b) If necessary, check and adjust the On−the−car balance.
Imbalance after adjustment: 8.0 g (0.018 lb) or less

4. INSPECT BEARING LOOSENESS (SEE PAGE 30−2)

5. INSPECT AXLE HUB RUNOUT (SEE PAGE 30−2)

2805O−01

HOW TO PROCEED WITH TROUBLESHOOTING

1. VEHICLE PULLING DIAGNOSIS (SEE PAGE 26−2)

2. DIAGNOSIS OF TIRE VIBRATION

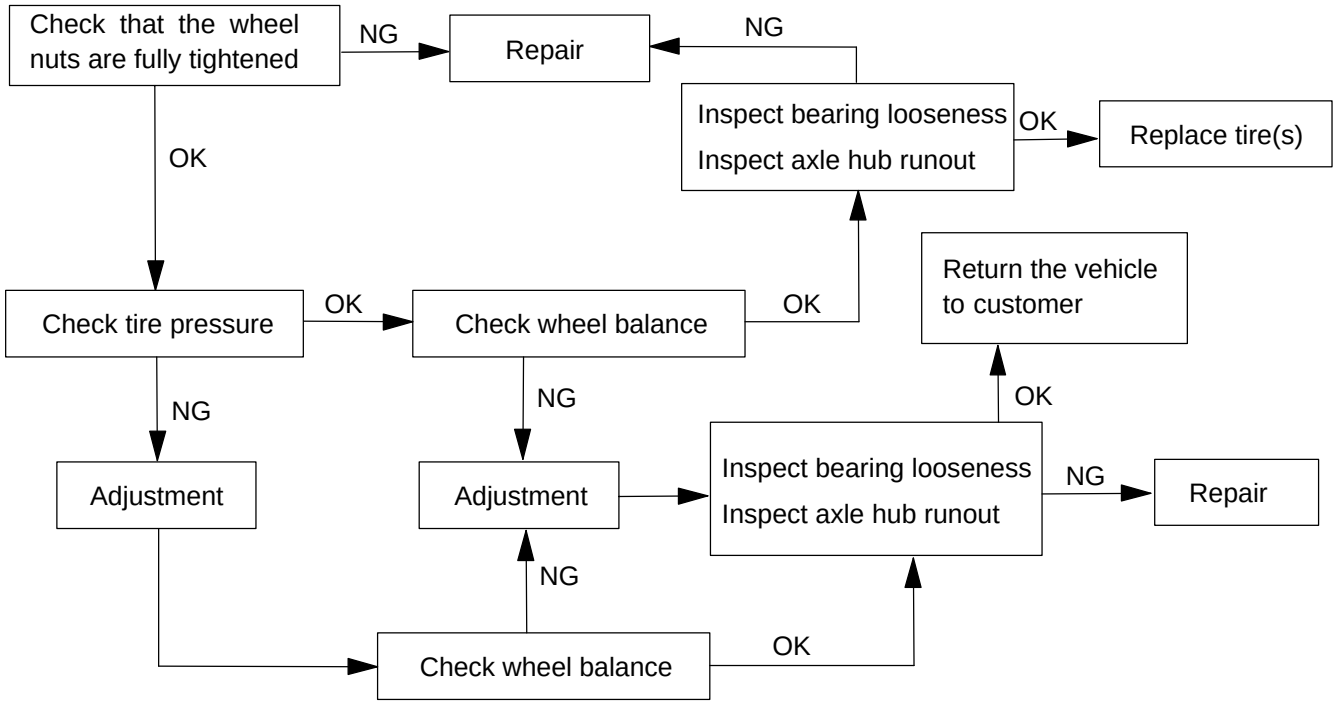

3. DIAGNOSIS OF IRREGULAR TIRE WEAR

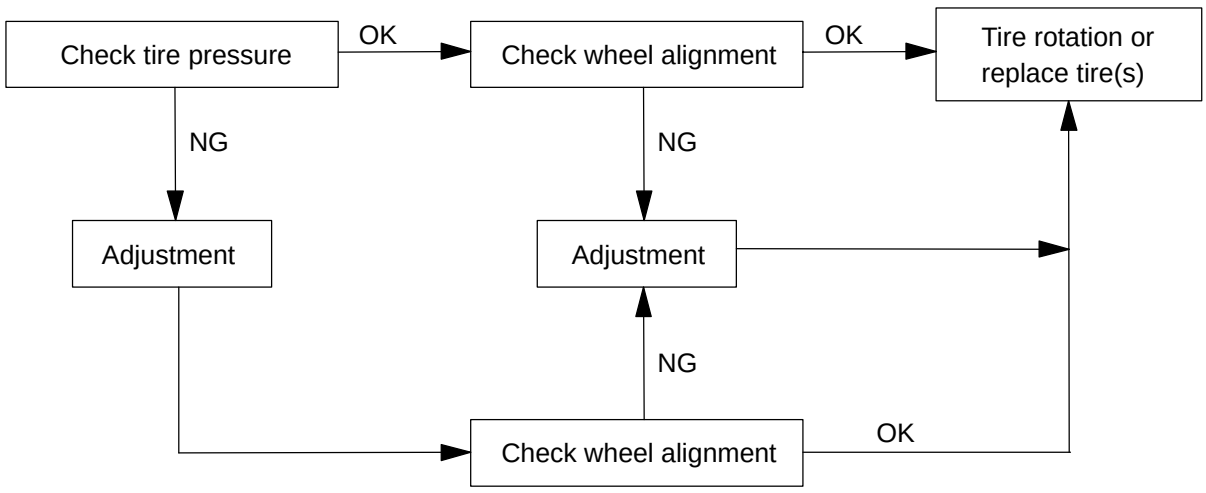

DRIVE SHAFT, PROPELLER SHAFT, AXLE (From July, 2003)

300M2−04

PROBLEM SYMPTOMS TABLE

Use the table below to help determine the cause of the problem. The causes of problem are listed in order of probability in the ”Suspected Area” column. Check each part in order. If necessary, replace these parts.

Symptom	Suspected Area	See page
Wander	1. Wheel alignment	26−5 27−3
	2. Steering linkage (Loosen or worn)	−
	3. Hub bearing (Worn)	30−2
	4. Stabilizer bar	26−20 27−16
Front wheel shimmy	1. Wheel balance	28−1
	2. Shock absorber	26−11 27−4
	3. Ball joint (Worn)	26−19
	4. Hub bearing (Worn)	30−2
Noise	Inboard joint or outboard joint (Worn)	30−8

300M1−01

ON−VEHICLE INSPECTION

1. REMOVE FRONT WHEEL
2. DISCONNECT FRONT DISC BRAKE CALIPER ASSY LH (SEE PAGE 30−8)
3. REMOVE FRONT DISC

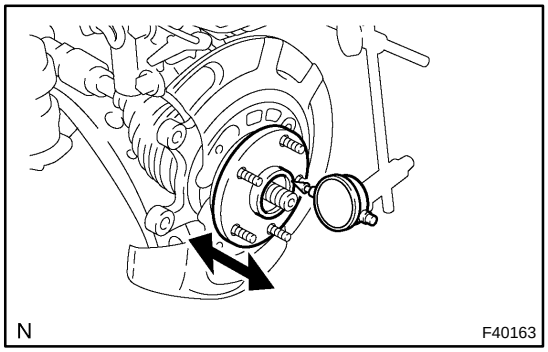

4. INSPECT FRONT AXLE HUB BEARING BACKLASH

(a) Using a dial indicator, check the backlash near the center of the axle hub.

Maximum: 0.05 mm (0.0020 in.)

If the backlash exceeds the maximum, replace the bearing.

NOTICE:

Ensure that the dial indicator is set at a right angle to the measurement surface.

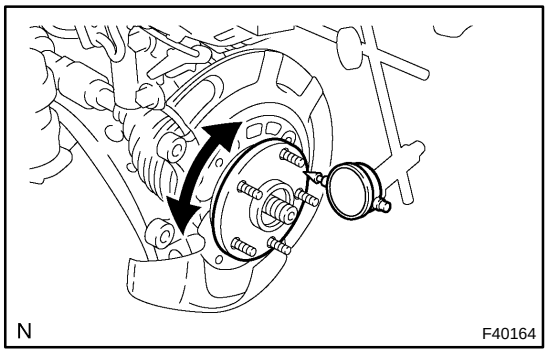

5. INSPECT FRONT AXLE HUB DEVIATION

(a) Using a dial indicator, check the deviation at the surface of the axle hub outside the hub bolt.

Maximum: 0.05 mm (0.0020 in.)

If the deviation exceeds the maximum, replace the axle hub.

NOTICE:

Ensure that the dial indicator is set at a right angle to the measurement surface.

6. INSTALL FRONT DISC
7. INSTALL FRONT DISC BRAKE CALIPER ASSY LH (SEE PAGE 30−8)
8. INSTALL FRONT WHEEL

   Torque: 103 N·m (1,050 kgf·cm, 76 ft·lbf)
9. REMOVE REAR WHEEL
10. DISCONNECT REAR DISC BRAKE CALIPER ASSY LH(DISC REAR BRAKE TYPE) (SEE PAGE 30−29)
11. REMOVE REAR DISC(DISC REAR BRAKE TYPE)
12. REMOVE REAR BRAKE DRUM SUB−ASSY(DRUM REAR BRAKE TYPE)

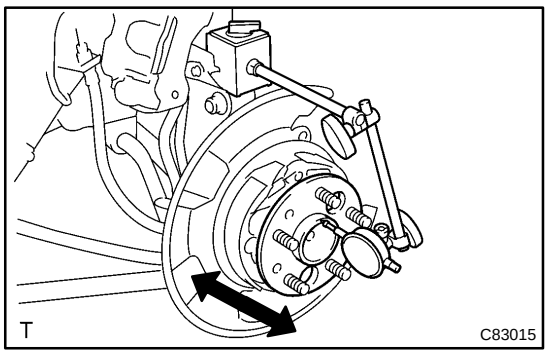

13. INSPECT REAR AXLE HUB BEARING BACKLASH

(a) Set a dial indicator near the center of the axle hub and check the backlash in the bearing shaft direction.

Maximum: 0.05 mm (0.0020 in.)

If the backlash exceeds the maximum, replace the axle hub assembly.

NOTICE:

Ensure that the dial indicator is set at a right angle to the measurement surface.

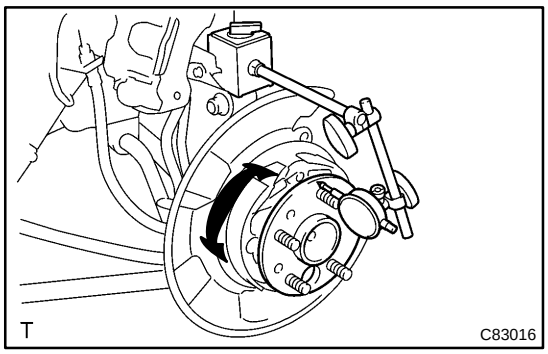

14. INSPECT REAR AXLE HUB DEVIATION

(a) Using a dial indicator, check the deviation at the surface of the axle hub outside the hub bolt.
Maximum: 0.07 mm (0.0027 in.)

If the deviation exceeds the maximum, replace the axle hub assembly.

NOTICE:

Ensure that the dial indicator is set at a right angle to the measurement surface.

15. INSTALL REAR DISC(DISC REAR BRAKE TYPE)

16. INSTALL REAR DISC BRAKE CALIPER ASSY LH (DISC REAR BRAKE TYPE)
(SEE PAGE 30−29)

17. INSTALL REAR BRAKE DRUM SUB−ASSY(DRUM REAR BRAKE TYPE)

18. INSTALL REAR WHEEL
Torque: 103 N·m (1,050 kgf·cm, 76 ft·lbf)

300M0−01

COMPONENTS

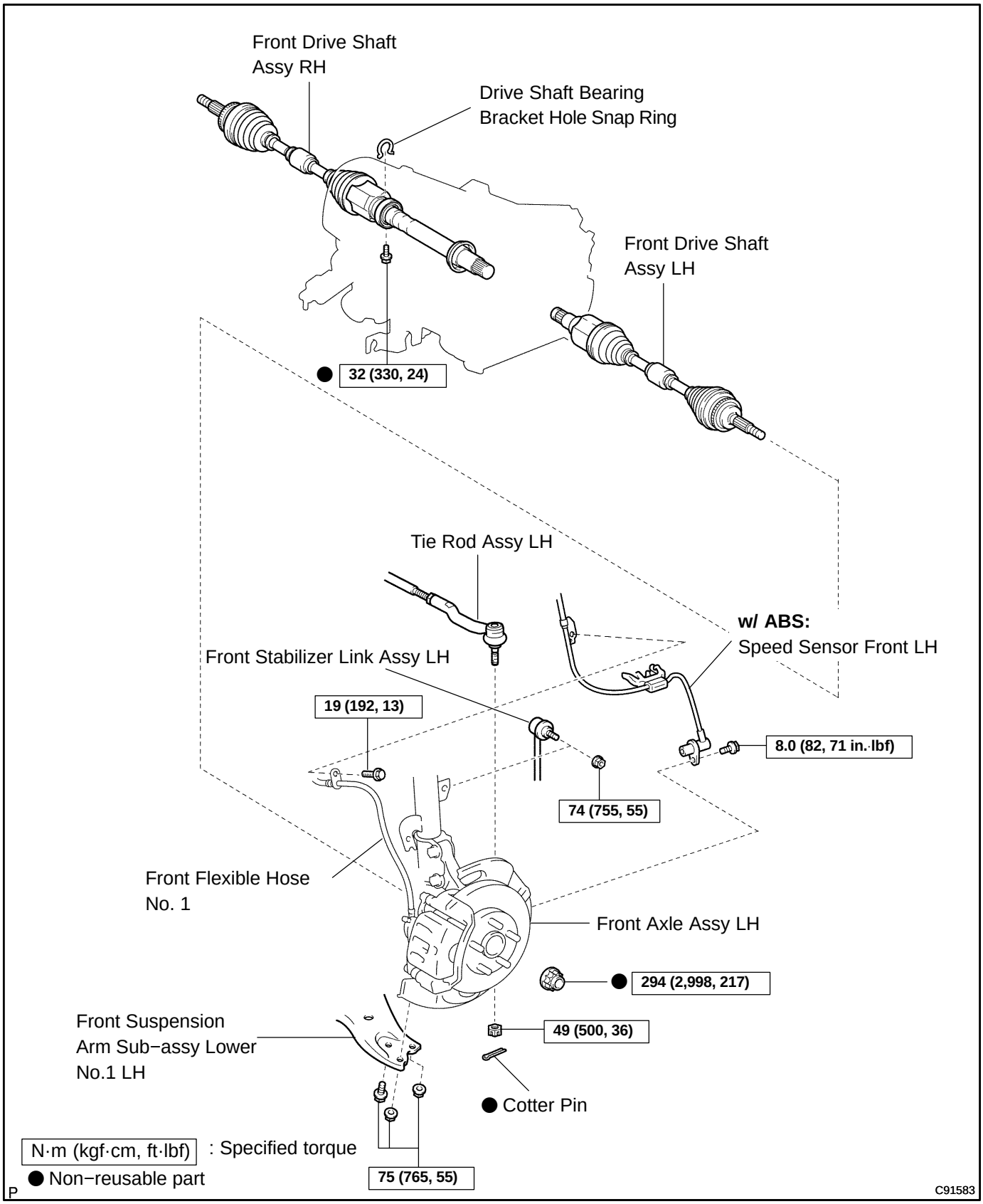

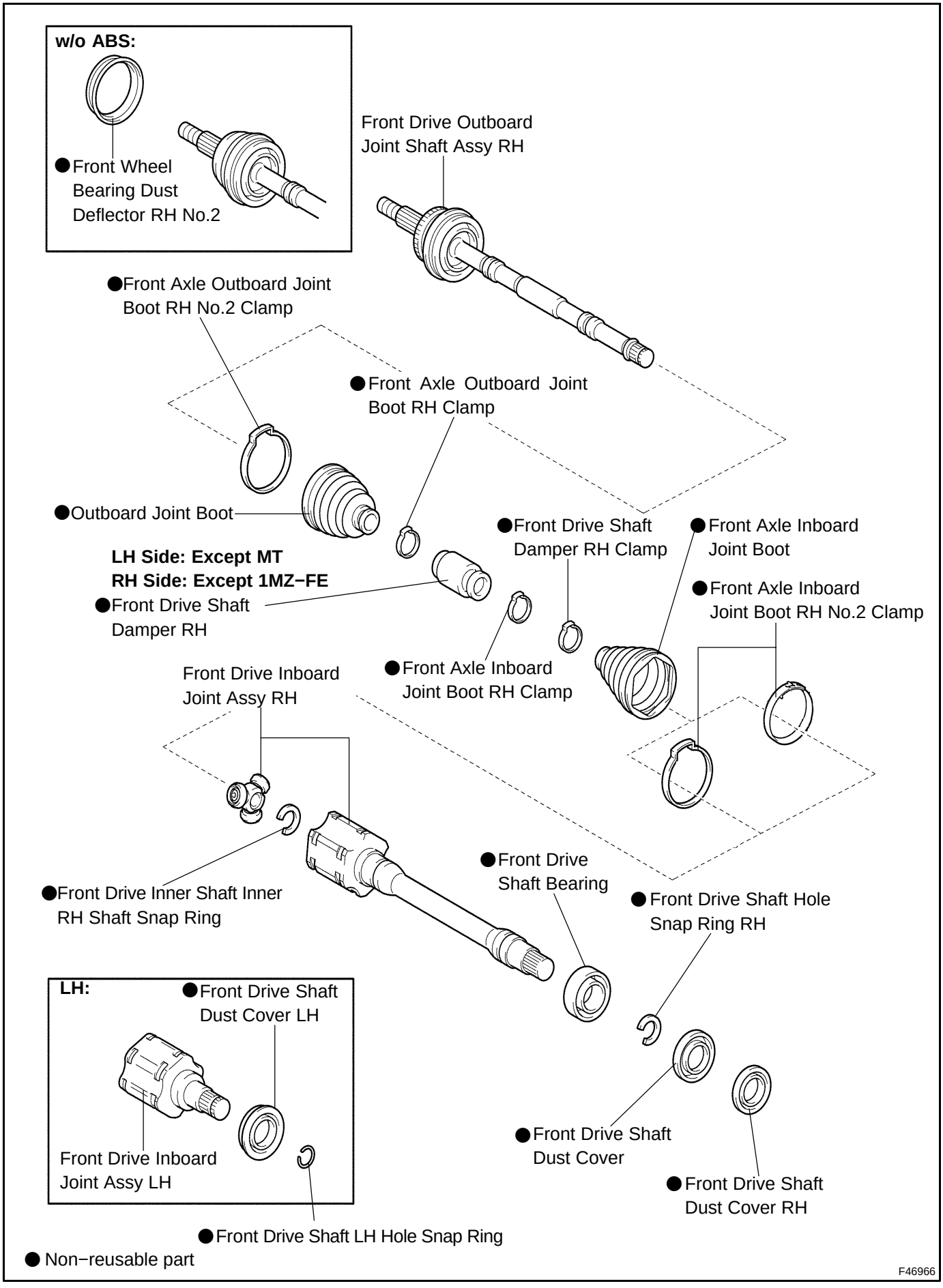
w/o ABS:
● Front Wheel Bearing Dust Deflector RH No.2
Front Drive Outboard Joint Shaft Assy RH
● Front Axle Outboard Joint Boot RH No.2 Clamp
● Front Axle Outboard Joint Boot RH Clamp
● Outboard Joint Boot
LH Side: Except MT
RH Side: Except 1MZ–FE
● Front Drive Shaft Damper RH
● Front Drive Shaft Damper RH Clamp
● Front Axle Inboard Joint Boot
● Front Axle Inboard Joint Boot RH No.2 Clamp
● Front Axle Inboard Joint Boot RH Clamp
Front Drive Inboard Joint Assy RH
● Front Drive Inner Shaft Inner RH Shaft Snap Ring
● Front Drive Shaft Bearing
● Front Drive Shaft Hole Snap Ring RH
LH:
● Front Drive Shaft Dust Cover LH
Front Drive Inboard Joint Assy LH
● Front Drive Shaft Dust Cover
● Front Drive Shaft Dust Cover RH
● Front Drive Shaft LH Hole Snap Ring
● Non–reusable part
F46966

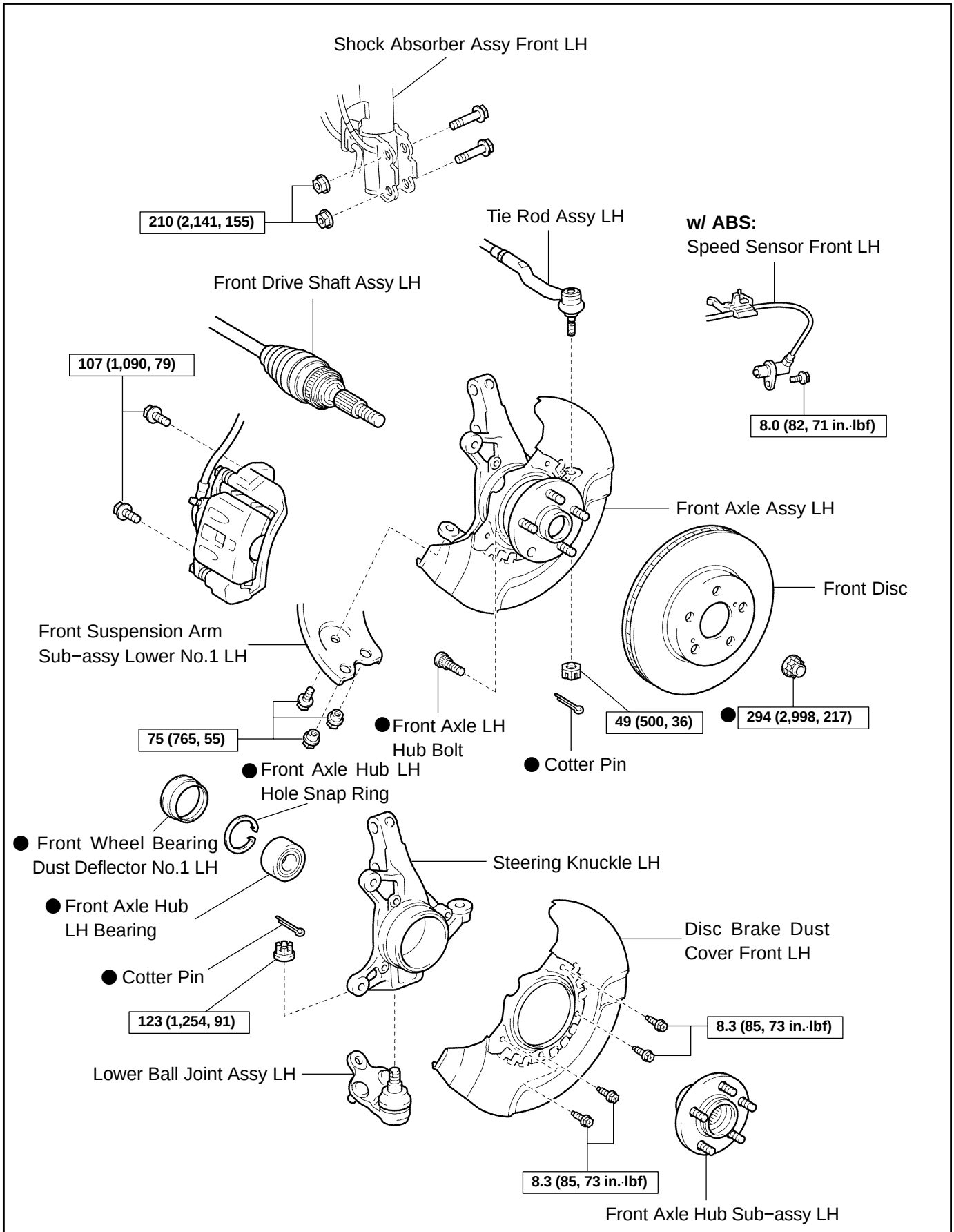
Shock Absorber Assy Front LH
210 (2,141, 155)
Tie Rod Assy LH
w/ ABS:
Speed Sensor Front LH
Front Drive Shaft Assy LH
107 (1,090, 79)
8.0 (82, 71 in.·lbf)
Front Axle Assy LH
Front Disc
Front Suspension Arm
Sub−assy Lower No.1 LH
75 (765, 55)
● Front Axle LH
Hub Bolt
49 (500, 36)
● 294 (2,998, 217)
● Cotter Pin
● Front Axle Hub LH
Hole Snap Ring
● Front Wheel Bearing
Dust Deflector No.1 LH
Steering Knuckle LH
● Front Axle Hub
LH Bearing
Disc Brake Dust
Cover Front LH
● Cotter Pin
123 (1,254, 91)
8.3 (85, 73 in.·lbf)
Lower Ball Joint Assy LH
8.3 (85, 73 in.·lbf)
Front Axle Hub Sub−assy LH
N·m (kgf·cm, ft·lbf) : Specified torque
● Non−reusable part
P
G29148

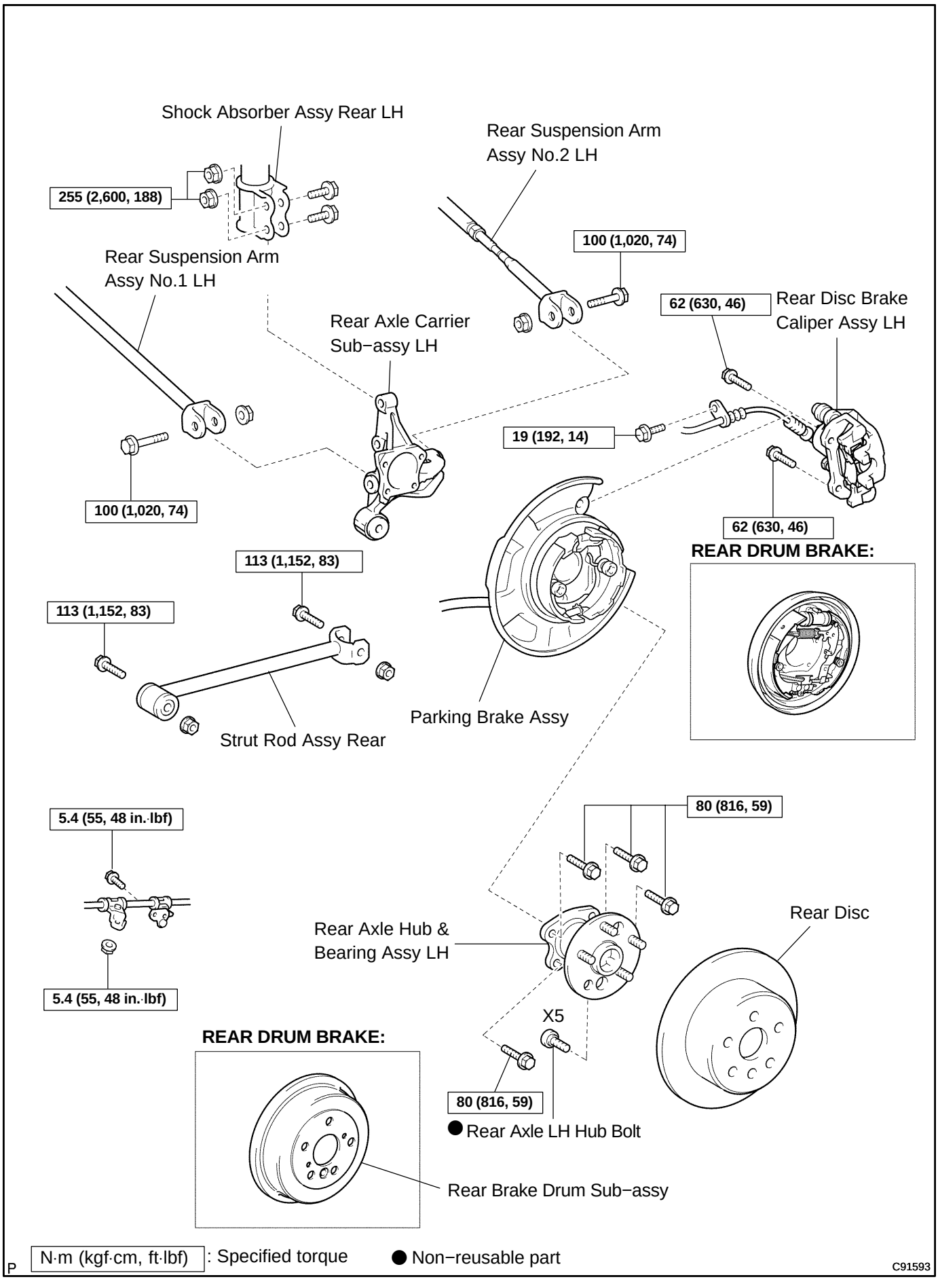

N·m (kgf·cm, ft·lbf) : Specified torque ● Non−reusable part

P C91593

FRONT DRIVE SHAFT (From July, 2003)

300M3−02

OVERHAUL

HINT:

- COMPONENTS: SEE PAGE 30−4
- Use the same procedures for the RH side and LH side.
- The Procedures listed below are for the LH side.

1. DRAIN AUTOMATIC TRANSAXLE FLUID (A/T TRANSAXLE) (SEE PAGE 40−37)

2. DRAIN MANUAL TRANSAXLE OIL (M/T TRANSAXLE) (SEE PAGE 41−3)

3. REMOVE FRONT WHEEL

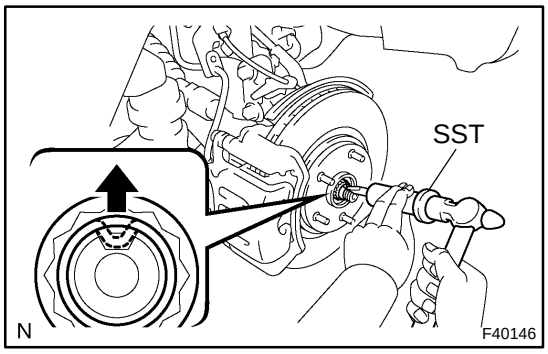

4. REMOVE FRONT AXLE HUB LH NUT

(a) Using SST and a hammer, unstake the staked part of the axle hub LH nut.

SST 09930−00010

NOTICE:

Loosen the staked part of the lock nut completely, otherwise the screw of the drive shaft may be damaged.

(b) While applying the brakes, remove the front axle hub LH nut.

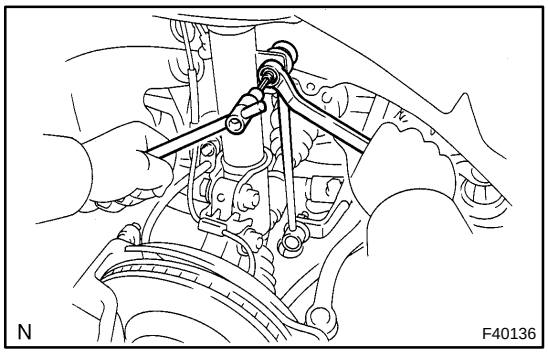

5. DISCONNECT FRONT STABILIZER LINK ASSY LH

(a) Remove the nut, and separate the stabilizer link assy LH.

HINT:

If the ball joint turns together with the nut, use a hexagon wrench (6 mm) to hold the stud.

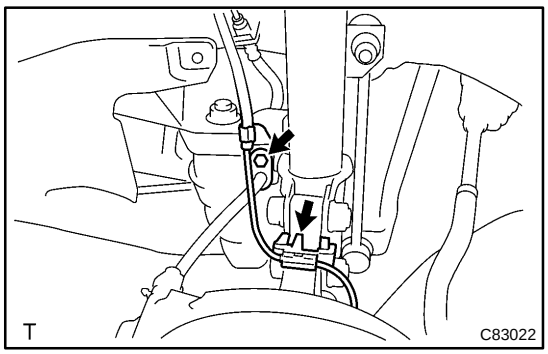

6. DISCONNECT SPEED SENSOR FRONT LH (W/ ABS)

(a) Remove the bolt and clip, and separate the sensor wire and hose from the shock absorber.

NOTICE:

Be careful not to damage the speed sensor.

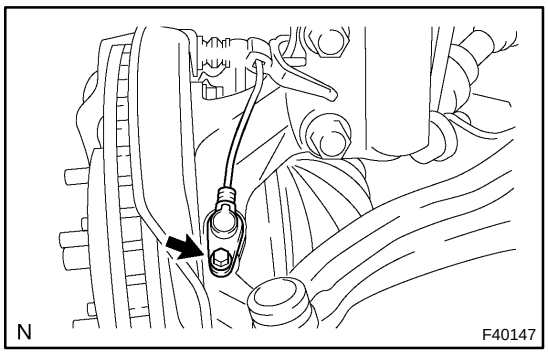

(b) Remove the bolt, and separate the speed sensor front LH from the steering knuckle.

NOTICE:

Prevent foreign matter from adhering to the speed sensor.

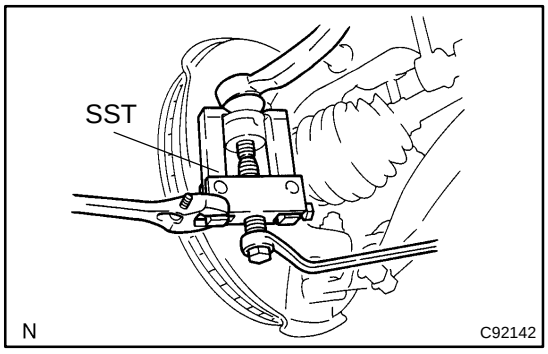

7. DISCONNECT TIE ROD ASSY LH

(a) Remove the cotter pin and nut.

(b) Using SST, separate the tie rod end from the steering knuckle.

SST 09628−62011

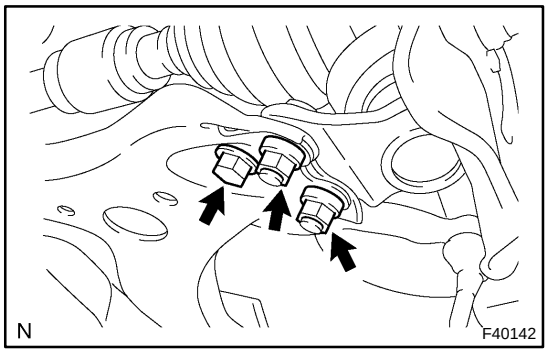

8. DISCONNECT FRONT SUSPENSION ARM SUB−ASSY LOWER NO.1 LH

(a) Remove the bolt and 2 nuts, and disconnect the front suspension arm sub−assy lower No.1 LH from the lower ball joint.

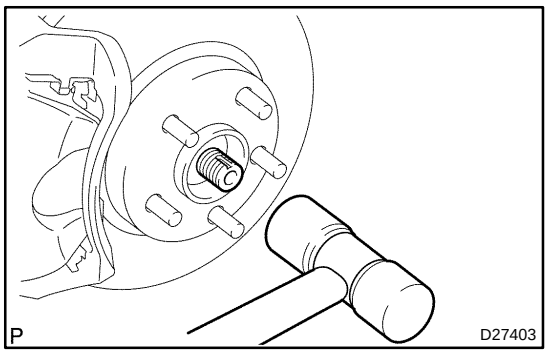

9. DISCONNECT FRONT AXLE ASSY LH

(a) Using a plastic hammer, separate the drive shaft from the axle hub.

NOTICE:

Be careful not to damage the boot and speed sensor rotor. (w/ABS)

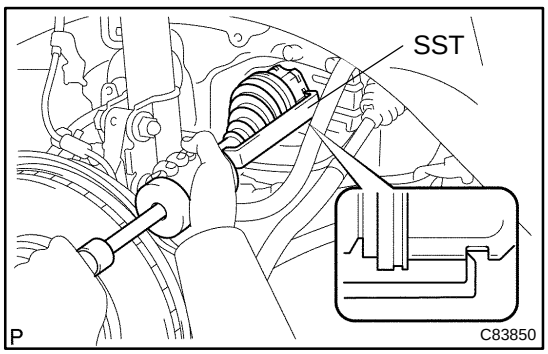

10. REMOVE FRONT DRIVE SHAFT ASSY LH

(a) Using SST, remove the front drive shaft assy LH.

SST 09520−01010, 09520−24010 (09520−32040)

NOTICE:

- **Be careful not to damage the transaxle case oil seal, inboard joint boot and drive shaft dust cover.**
- **Be careful not to drop the drive shaft assy.**

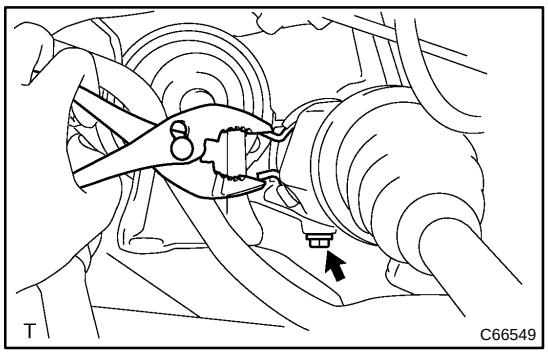

11. REMOVE FRONT DRIVE SHAFT ASSY RH

(a) Using pliers, remove the drive shaft bearing bracket hole snap ring.

(b) Remove the bolt and front drive shaft assy RH from the drive shaft bearing bracket.

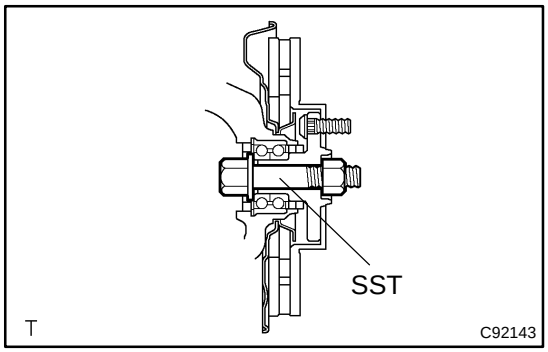

12. FIX FRONT AXLE ASSY LH

SST 09608−16042 (09608−02021, 09608−02041)

NOTICE:

The hub bearing could be damaged if it is subjected to the vehicle's full weight, such as when moving the vehicle with the drive shaft removed.

Therefore, if it is absolutely necessary to place the vehicle weight on the hub bearing, first support it with SST.

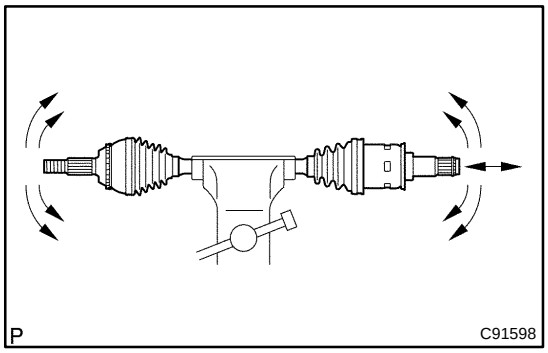

13. INSPECT FRONT DRIVE SHAFT ASSY LH

(a) Check that there is no remarkable play in the radial direction of the outboard joint.

(b) Check that the inboard joint slides smoothly in the thrust direction.

(c) Check that there is no remarkable play in the radial direction of the inboard joint.

(d) Check the boots for damage.

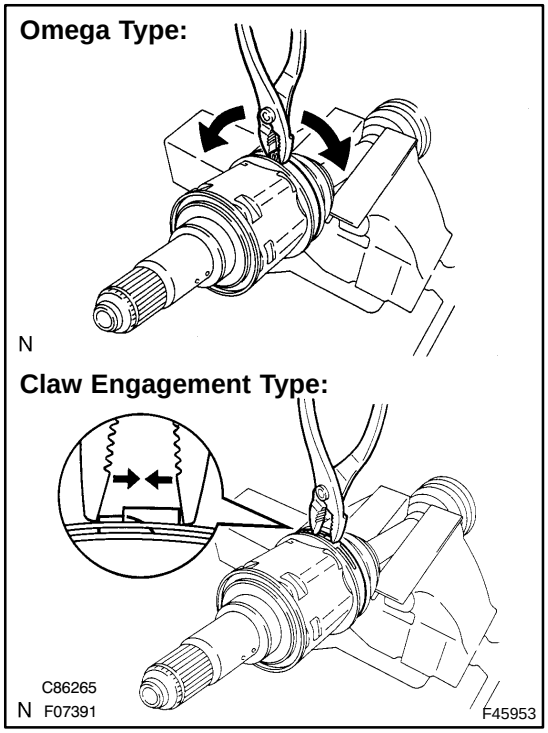

14. REMOVE FRONT AXLE INBOARD JOINT BOOT LH NO.2 CLAMP

(a) Using pliers, remove the inboard joint boot LH No.2 clamp, as shown in the illustration.

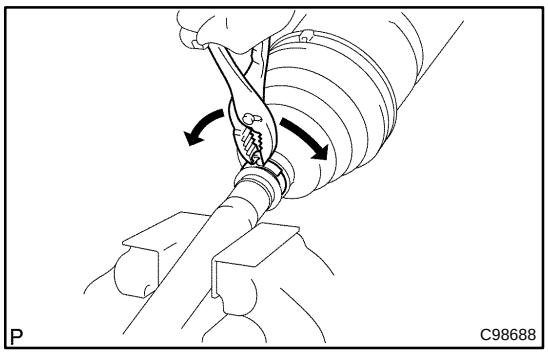

15. REMOVE FRONT AXLE INBOARD JOINT BOOT LH CLAMP

(a) Remove the inboard joint boot LH clamp using the same procedures as for the inboard joint boot LH clamp.

16. DISCONNECT FR AXLE INBOARD JOINT BOOT

(a) Separate the inboard joint boot from the inboard joint assy.

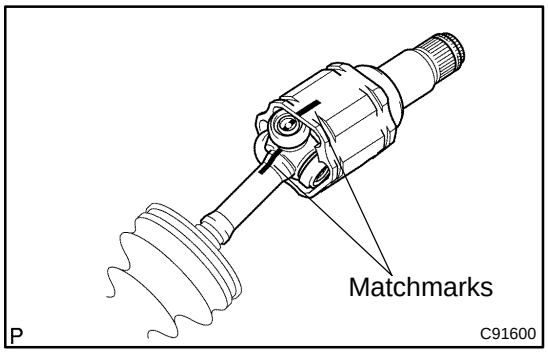

17. REMOVE FRONT DRIVE INBOARD JOINT ASSY LH

(a) Put matchmarks on the inboard joint assy and outboard joint shaft.

NOTICE:

Do not use a punch for the marks.

(b) Remove the inboard joint assy from the outboard joint shaft.

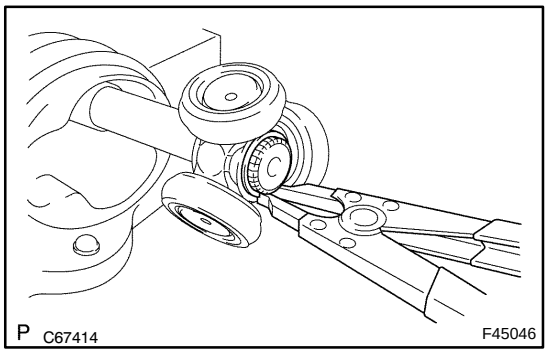

(c) Using a snap ring expander, remove the front drive inner shaft inner RH shaft snap ring.

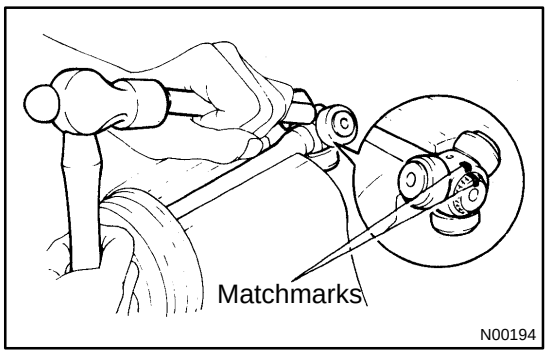

(d) Put matchmarks on the outboard joint shaft and tripod joint.

NOTICE:

Do not use a punch for the marks.

(e) Using a brass bar and a hammer, remove the tripod joint from the outboard joint shaft.

NOTICE:

Do not tap the roller.

HINT:

This procedure is unnecessary for a manual transaxle vehicle because it does not have a drive shaft damper.

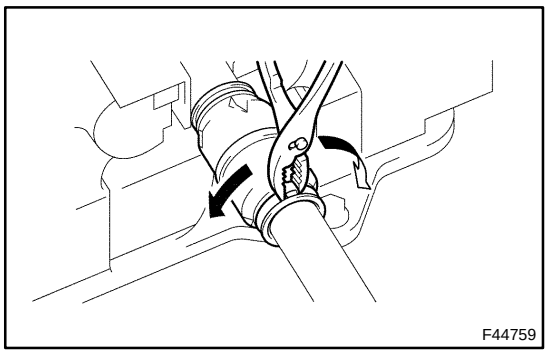

18. REMOVE FRONT DRIVE SHAFT DAMPER LH (EXCEPT MANUAL TRANSAXLE)

(a) Using pliers, remove the drive shaft damper clamp, as shown in the illustration.

(b) Remove the drive shaft damper.

19. REMOVE FRONT DRIVE SHAFT DAMPER RH (EXCEPT 1MZ−FE ENGINE TYPE)

(a) Using pliers, remove the drive shaft damper clamp, as shown in the illustration.

(b) Remove the drive shaft damper.

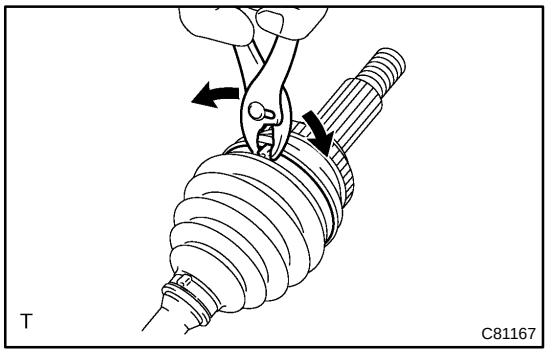

20. REMOVE FRONT AXLE OUTBOARD JOINT BOOT LH NO.2 CLAMP

(a) Using pliers, remove the outboard joint boot LH No.2 clamp, as shown in the illustration.

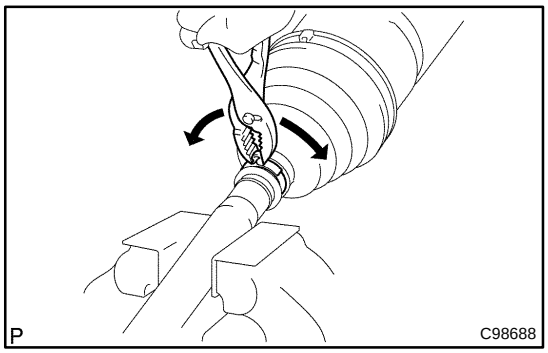

21. REMOVE FRONT AXLE OUTBOARD JOINT BOOT LH CLAMP

(a) Remove the outboard joint boot LH clamp using the same procedures as for the outboard joint boot LH No.2 clamp.

22. REMOVE OUTBOARD JOINT BOOT

(a) Remove the outboard joint boot from the outboard joint shaft.

(b) Remove the old grease from the outboard joint.

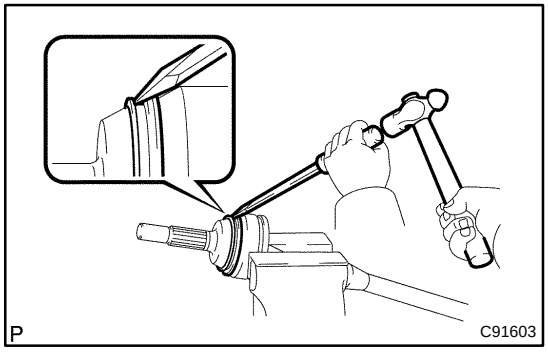

23. REMOVE FRONT WHEEL BEARING DUST DEFLECTOR LH NO.2 (W/O ABS)

(a) Mount the front drive outboard joint shaft assy LH in a soft jaw vise.

(b) Using a screwdriver and a hammer, remove the front wheel bearing dust deflector LH No.2.

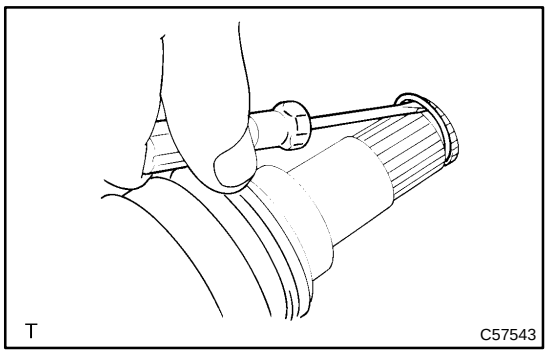

24. REMOVE FRONT DRIVE SHAFT LH HOLE SNAP RING

(a) Using a screwdriver, remove the hole snap ring.

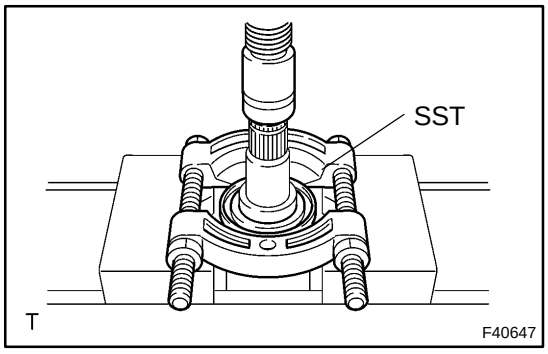

25. REMOVE FRONT DRIVE SHAFT DUST COVER LH

(a) Using SST and a press, remove the front drive shaft dust cover LH.

SST 09950−00020

NOTICE:

Be careful not to drop the inboard joint assy.

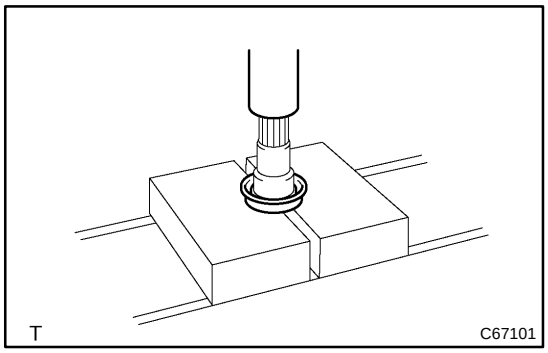

26. REMOVE FRONT DRIVE SHAFT DUST COVER RH

(a) Using a press, remove the front drive shaft dust cover RH.

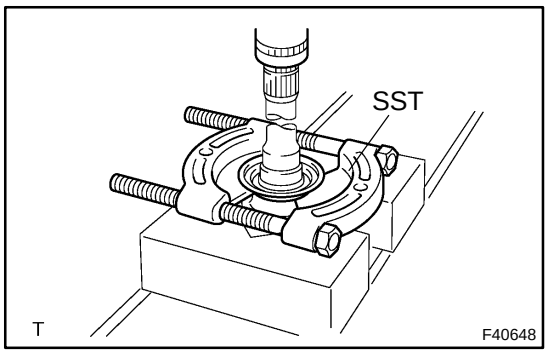

27. REMOVE FRONT DRIVE SHAFT DUST COVER

(a) Using SST and a press, remove the front drive shaft dust cover.

SST 09950−00020

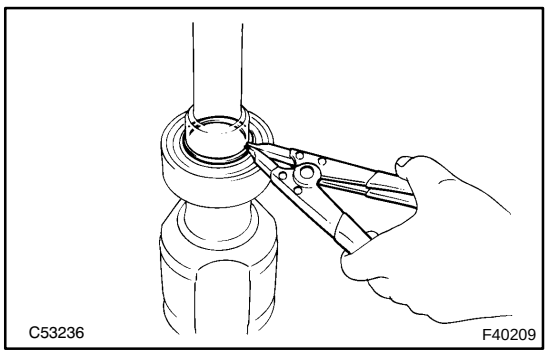

28. REMOVE FRONT DRIVE SHAFT BEARING

(a) Using snap ring pliers, remove the front drive shaft hole snap ring RH.

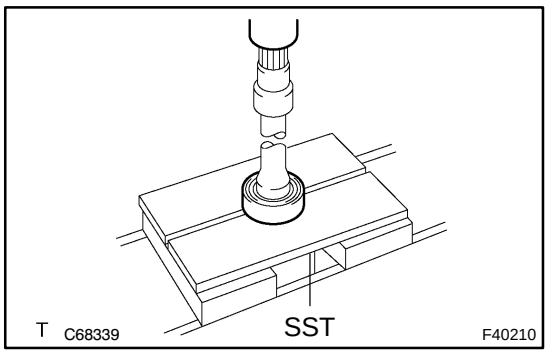

(b) Using SST and a press, remove the bearing.
SST 09527−10011

NOTICE:

Be careful not to drop the inboard joint assy.

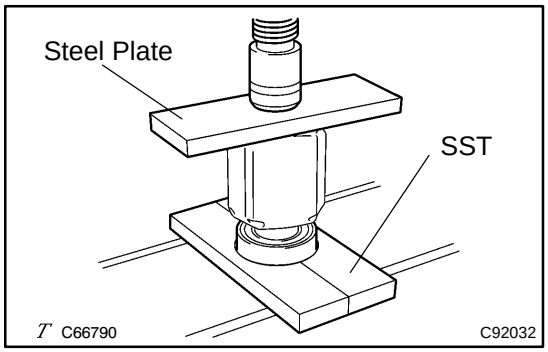

29. INSTALL FRONT DRIVE SHAFT BEARING

(a) Using SST and a steel plate, install a new front drive shaft bearing.
SST 09527−30010, 09527−10011

NOTICE:

Bearing should be completely installed.

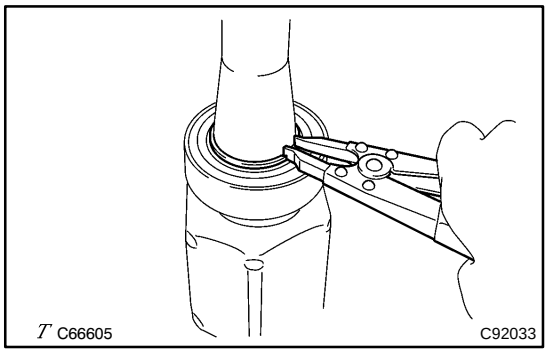

(b) Using a snap ring expander, install a new front drive shaft hole snap ring RH.

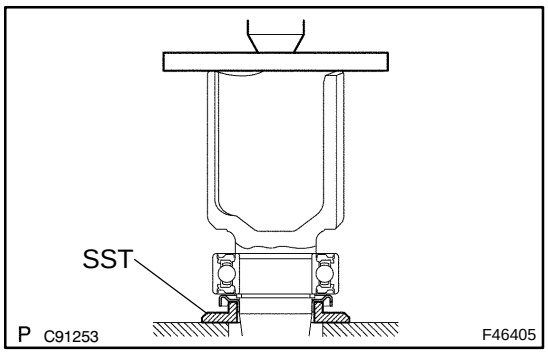

30. INSTALL FRONT DRIVE SHAFT DUST COVER

(a) Using SST and a press, install a new drive shaft dust cover.
SST 09726−40010

NOTICE:

- **Dust cover should be completely installed.**
- **Be careful not to damage the dust cover.**

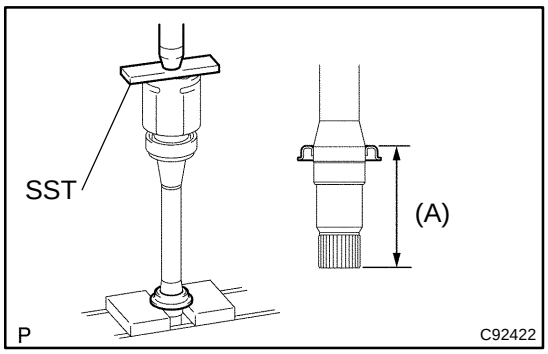

31. INSTALL FRONT DRIVE SHAFT DUST COVER RH

(a) Using SST and a press, install a new drive shaft dust cover RH until the distance from the tip of the center drive shaft to the drive shaft dust cover RH meets the specification, as shown in the illustration.

SST 09527−10011

Distance (A):

1MZ−FE, 3MZ−FE: 110.5 ± 0.5 mm (4.3 ± 0.02 in.)

2AZ−FE: 91.5 ± 0.5 mm (3.6 ± 0.02 in.)

NOTICE:

- **Dust cover should be completely installed.**
- **Be careful not to damage the dust cover.**

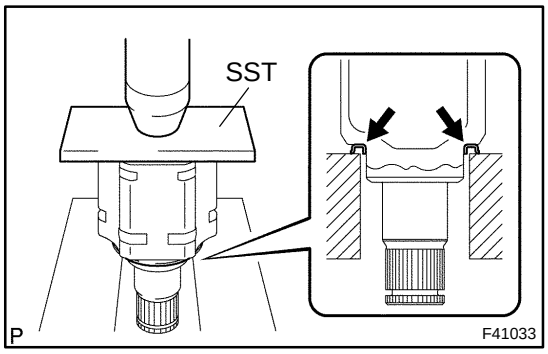

32. INSTALL FRONT DRIVE SHAFT DUST COVER LH

(a) Using SST and a press, install a new front drive shaft dust cover LH.

SST 09527−10011

NOTICE:

- **Dust cover should be completely installed.**
- **Be careful not to damage the dust cover.**

33. INSTALL FRONT DRIVE SHAFT LH HOLE SNAP RING

(a) Install a new front drive shaft LH hole snap ring.

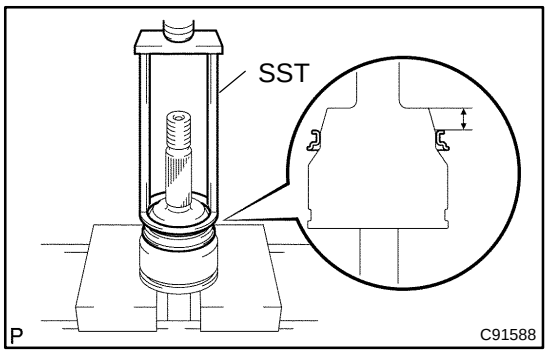

34. INSTALL FRONT WHEEL BEARING DUST DEFLECTOR LH NO.2 (W/O ABS)

(a) Using SST and a press, install a new front wheel bearing dust deflector LH No.2 until the distance from the tip of front drive outboard joint shaft assy LH to the front wheel bearing dust deflector LH No.2 reaches the specification, as shown in the illustration.

SST 09387−00020

Distance: 13.5 − 13.8 mm (0.531 − 0.543 in.)

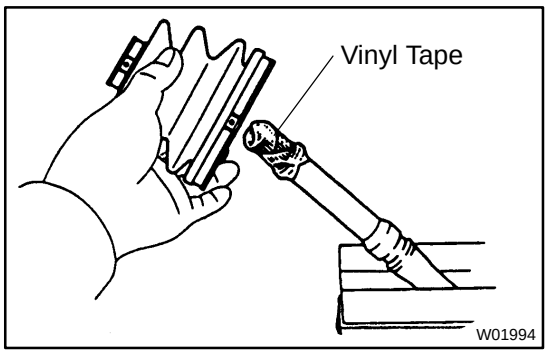

35. INSTALL OUTBOARD JOINT BOOT

HINT:

Before installing the boots, wrap the spline of the drive shaft with vinyl tape to prevent the boots from being damaged.

(a) Hold the drive shaft lightly in a soft vise.

(b) Temporarily install a new outboard joint boot with 2 clamps to the drive shaft.

(c) Pack the outboard joint shaft and boot with grease.

Grease capacity:

Drive type	Grease capacity
2AZ−FE (AT)	100 to 120 g (3.5 to 4.2 oz.)
2AZ−FE (MT)	105 to 125 g (3.7 to 4.4 oz.)
1MZ−FE 3MZ−FE	195 to 225 g (6.9 to 7.9 oz.)

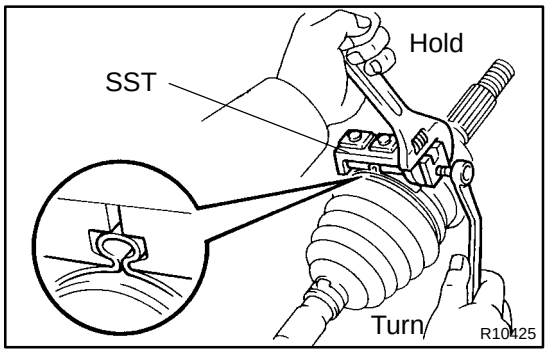

36. INSTALL FRONT AXLE OUTBOARD JOINT BOOT LH NO.2 CLAMP

(a) Install the 2 outboard joint boot clamps onto the boot.

(b) Place SST onto the outboard joint boot LH No.2 clamp.
SST 09521−24010

(c) Tighten the SST so that the outboard joint boot LH No.2 clamp is pinched.

NOTICE:

Do not overtighten the SST.

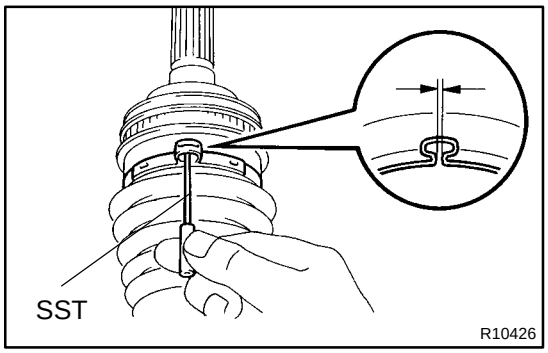

(d) Using SST, measure the clearance of the outboard joint boot LH No.2 clamp.
SST 09240−00020
Clearance: 3.0 to 4.0 mm (0.118 to 0.157 in.)

NOTICE:

When the measured value is greater than the specified value, retighten the clamp.

37. INSTALL FRONT AXLE OUTBOARD JOINT BOOT LH CLAMP

(a) The procedure for the outboard joint boot LH clamp is the same as above.
SST 09521−24010, 09240−00020
Clearance: 1.5 to 2.5 mm (0.059 to 0.098 in.)

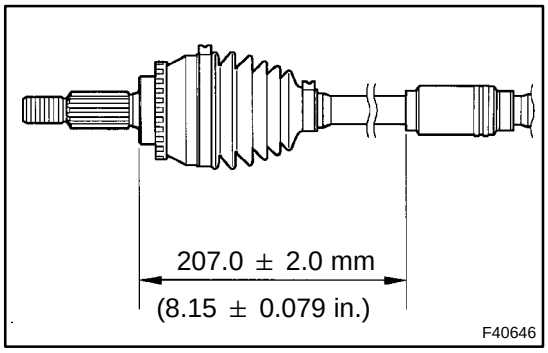

38. INSTALL FRONT DRIVE SHAFT DAMPER LH (EXCEPT MANUAL TRANSAXLE)

(a) Install the drive shaft damper LH to the drive shaft.

(b) Make sure that the damper is on the shaft groove.

(c) Set the distance, as described below.
Distance: 207 ± 2.0 mm (8.15 ± 0.079 in.)

HINT:

This procedure is unnecessary for a manual transaxle vehicle because it does not have a drive shaft damper.

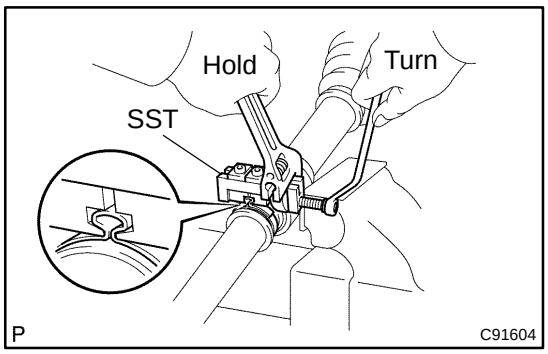

(d) Place SST onto the front drive shaft damper LH clamp.
SST 09521−24010

(e) Tighten the SST so that the front drive shaft damper LH clamp is pinched.

NOTICE:
Do not overtighten the SST.

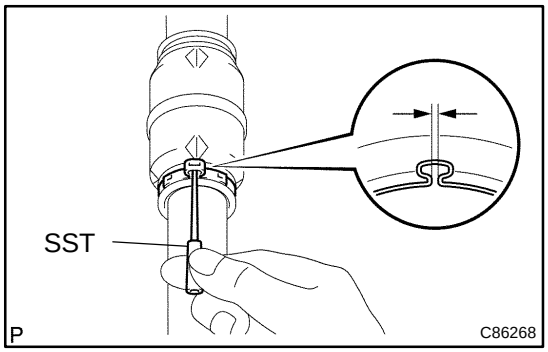

(f) Using SST, measure the clearance of the drive shaft damper clamp.
SST 09240−00020
Clearance: 0.5 to 1.2 mm (0.020 to 0.047 in.)

NOTICE:
When the measured value is greater than the specified value, retighten the clamp.

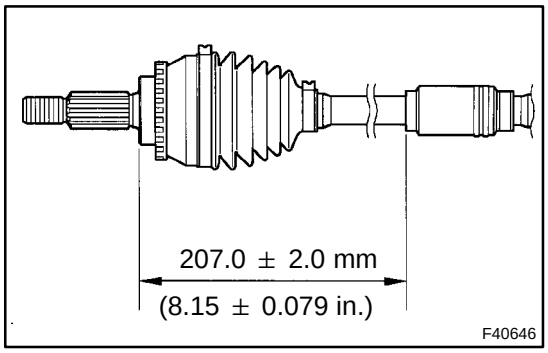

39. INSTALL FRONT DRIVE SHAFT DAMPER RH (EXCEPT 1MZ−FE ENGINE TYPE)

(a) Install the drive shaft damper RH to the drive shaft.

(b) Make sure that the damper is on the shaft groove.

(c) Set the distance, as described below.
Distance: 207 ± 2.0 mm (8.15 ± 0.079 in.)

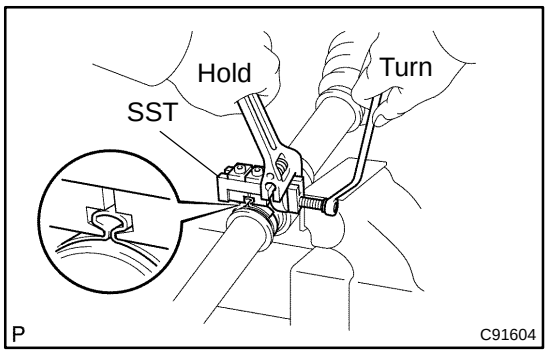

(d) Place SST onto the front drive shaft damper RH clamp.
SST 09521−24010

(e) Tighten the SST so that the front drive shaft damper RH clamp is pinched.

NOTICE:
Do not overtighten the SST.

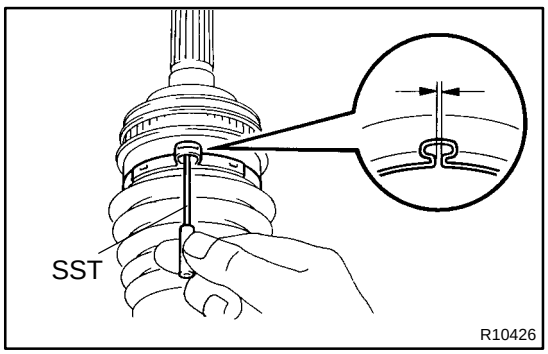

(f) Using SST, measure the clearance of the outboard joint boot RH No.2 clamp.
SST 09240−00020
Clearance: 0.5 to 1.2 mm (0.020 to 0.047 in.)

NOTICE:
When the measured value is greater than the specified value, retighten the clamp.

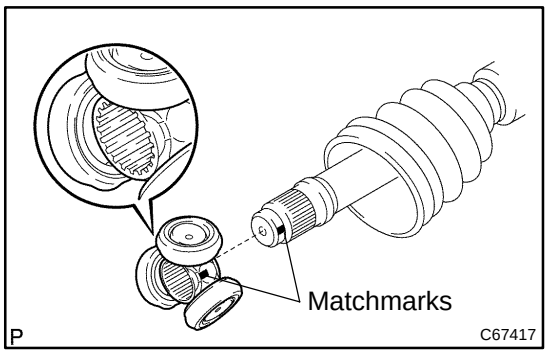

40. INSTALL FRONT DRIVE INBOARD JOINT ASSY LH

(a) Temporarily install a new inboard joint boot with 2 clamps to the drive shaft.

(b) Place the beveled side of the tripod joint axial spline toward the outboard joint shaft.

(c) Align the matchmarks.

(d) Using a brass bar and a hammer, tap in the tripod joint to the outboard joint shaft.

NOTICE:

- **Do not tap the roller.**
- **Be sure to install the tripod joint assy in the correct direction.**

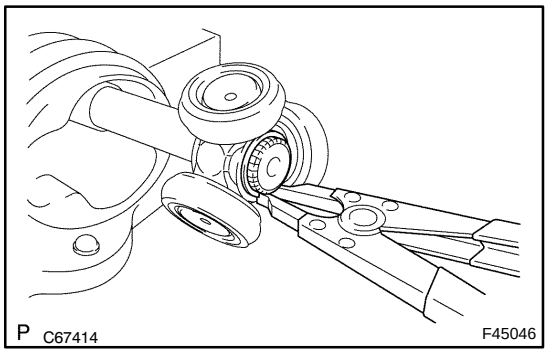

(e) Using a snap ring expander, install a new shaft snap ring.

(f) Pack the outboard joint shaft and boot with grease.

Grease capacity:

2AZ−FE	170 to 190 g (6.0 to 6.7 oz.)
1MZ−FE 3MZ−FE	155 to 175 g (5.5 to 6.2 oz.)

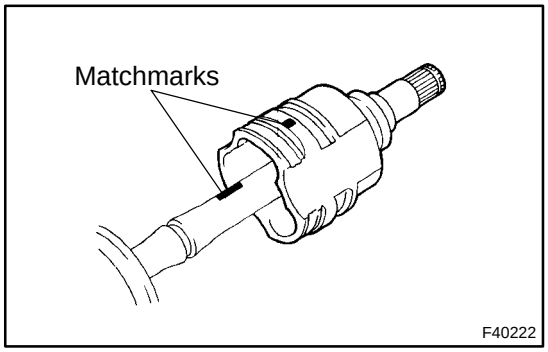

(g) Align the matchmarks and install the inboard joint assy to the outboard joint shaft assy.

41. INSTALL FR AXLE INBOARD JOINT BOOT

(a) Install the inboard joint boot to the inboard joint assy.

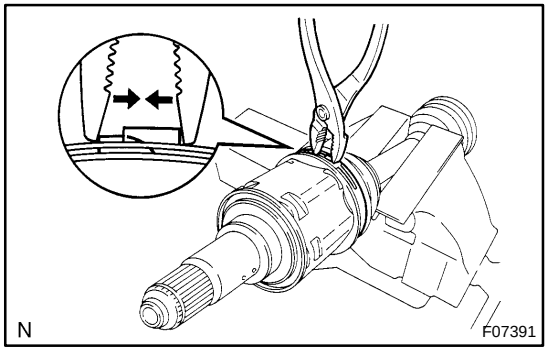

42. INSTALL FRONT AXLE INBOARD JOINT BOOT LH NO.2 CLAMP

(a) Claw Engagement

(1) Using pliers, install the inboard joint boot LH No.2 clamp, as shown in the illustration.

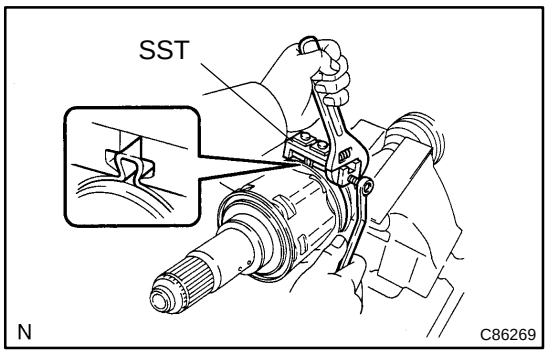

(b) Omega Clamp Type:
Install new inboard joint boot clamps.
(1) Hold the drive shaft lightly in a soft vise.
(2) Install 2 new inboard joint boot clamps to the boot.
(3) Place SST onto the inboard joint boot LH No.2 clamp.
SST 09521−24010
(4) Tighten the SST so that the inboard joint boot LH No.2 clamp is pinched.

NOTICE:
Do not overtighten the SST.

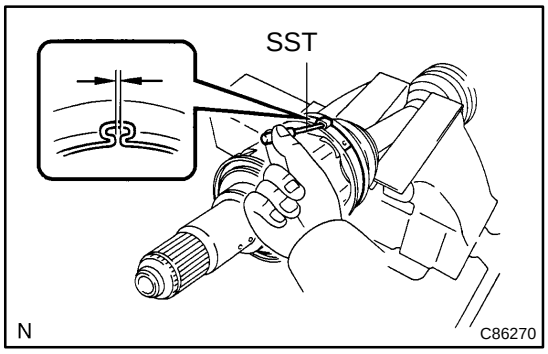

(5) Using SST, measure the clearance of the inboard joint boot LH No.2 clamp.
SST 09240−00020
Clearance: 1.9 mm (0.075 in.) or less

NOTICE:
When the measured value is greater than the specified value, retighten the clamp.

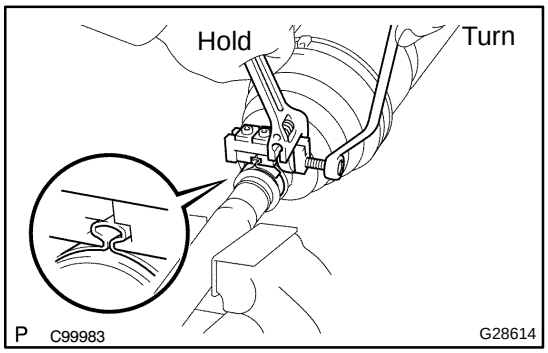

43. INSTALL FRONT AXLE INBOARD JOINT BOOT LH CLAMP

(a) Install new inboard joint boot clamps.
(1) Hold the drive shaft lightly in a soft vise.
(2) Install 2 new inboard joint boot clamps to the boot.
(3) Place SST onto the inboard joint boot LH clamp.
SST 09521−24010, 09240−00020
(4) Tighten the SST so that the inboard joint boot LH clamp is pinched.

NOTICE:
Do not overtighten the SST.

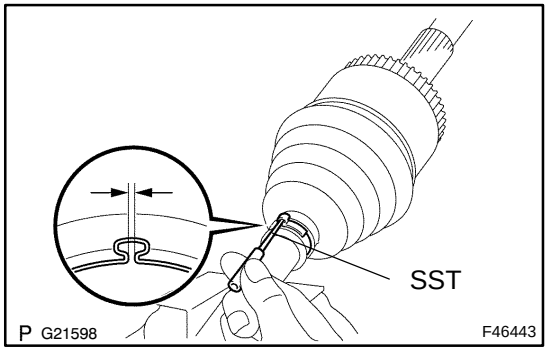

(5) Using SST, measure the clearance of the inboard joint boot LH clamp.
SST 09240−00020
Clearance: 1.9 mm (0.075 in.) or less

NOTICE:
When the measured value is greater than the specified value, retighten the clamp.

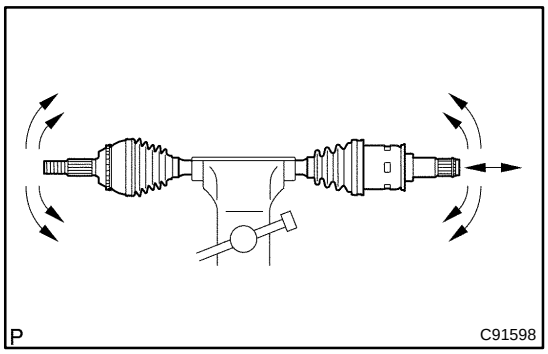

44. INSPECT FRONT DRIVE SHAFT

(a) Check that there is no remarkable play in the radial direction of the outboard joint.

(b) Check that the inboard joint slides smoothly in the thrust direction.

(c) Check that there is no remarkable play in the radial direction of the inboard joint.

(d) Check the boots for damage.

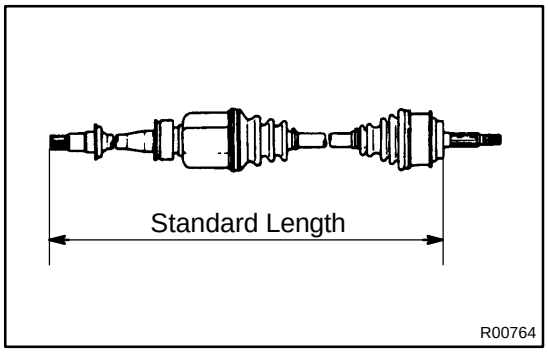

(e) Make sure that the 2 boots are on the shaft groove.

(f) Make sure that the 2 boots are not stretched or contracted when the drive shaft is at standard length.

Drive shaft standard length: mm (in.)

1MZ−FE, 3MZ−FE:

LH	580.76 ± 2.0 (22.864 ± 0.079)
RH	898.0 ± 2.0 (35.354 ± 0.079)

2AZ−FE:

LH	591.2 ± 2.0 (23.276 ± 0.079)
RH	890 ± 2.0 (35.039 ± 0.079)

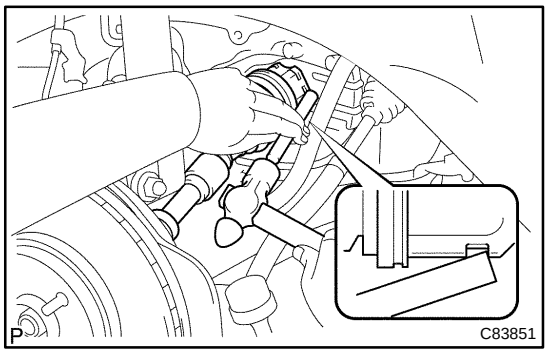

45. INSTALL FRONT DRIVE SHAFT ASSY LH

(a) Coat the spline of the inboard joint shaft assy with ATF.

(b) Align the shaft splines and install the drive shaft assy with a brass bar and a hammer.

NOTICE:

- **Set the snap ring with the opening side facing downward.**
- **Be careful not to damage the oil seal boot and dust cover.**
- **Move the drive shaft assy while keeping it level.**

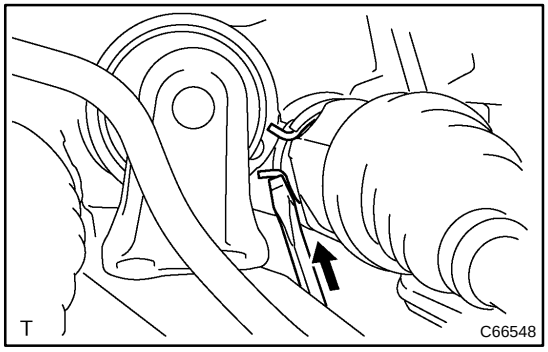

46. INSTALL FRONT DRIVE SHAFT ASSY RH

(a) Using a screwdriver, install a new bearing bracket hole snap ring.

NOTICE:

Do not damage the oil seal and boot.

(b) Install the bolt.

Torque: 32 N·m (330 kgf·cm, 24 ft·lbf)

47. INSTALL FRONT AXLE ASSY LH

(a) Install the front drive shaft assy LH to the front axle assy LH.

NOTICE:

- **Be careful not to damage the outboard joint boot.**
- **w/ ABS:**
  Be careful not to damage the speed sensor rotor.

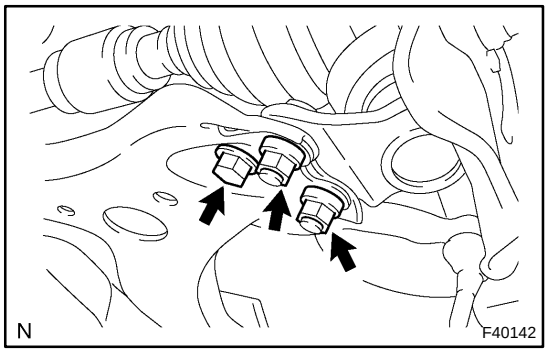

48. INSTALL FRONT SUSPENSION ARM SUB−ASSY LOWER NO.1 LH

(a) Install the lower ball joint to the front suspension arm sub−assy lower with the bolt and nuts.
Torque: 75 N·m (765 kgf·cm, 55 ft·lbf)

49. INSTALL TIE ROD ASSY LH

(a) Install the tie rod end to the steering knuckle with the nut.
Torque: 49 N·m (500 kgf·cm, 36 ft·lbf)

(b) Install a new cotter pin.

NOTICE:

If the holes for the cotter pin are not aligned, further tighten the nut up to 60 .

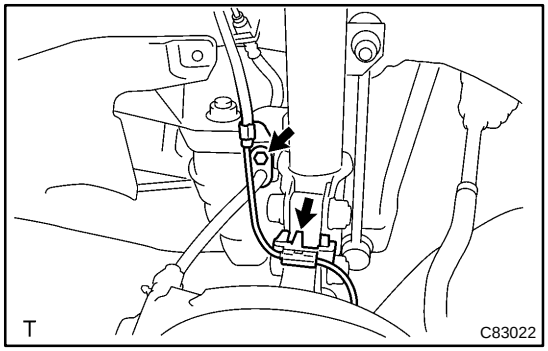

50. INSTALL SPEED SENSOR FRONT LH (W/ ABS)

(a) Install the flexible hose and the speed sensor to the shock absorber with the bolt and set the clip of sensor on knuckle.
Torque: 19 N·m (192 kgf·cm, 13 ft·lbf)

NOTICE:

- **Be careful not to damage the speed sensor.**
- **Prevent foreign matter from adhering to the speed sensor.**
- **Do not twist the sensor wire when installing the speed sensor.**

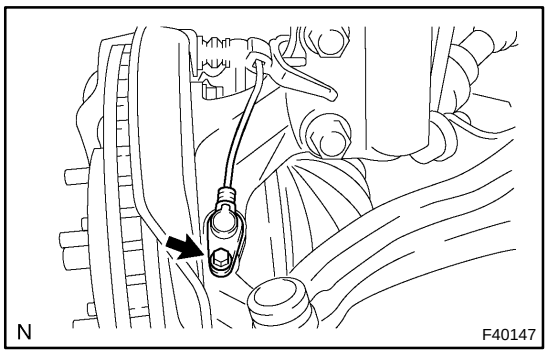

(b) Install the speed sensor to the steering knuckle with the bolt.

Torque: 8.0 N·m (82 kgf·cm, 71 in.·lbf)

NOTICE:

Prevent foreign matter from adhering to the speed sensor.

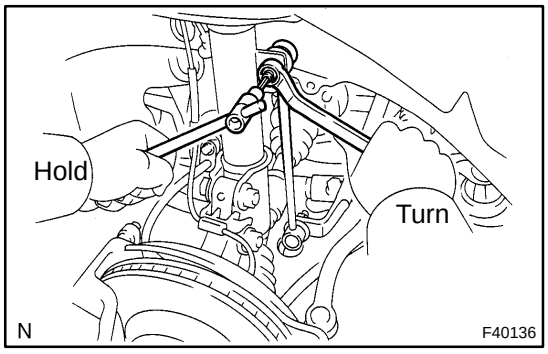

51. INSTALL FRONT STABILIZER LINK ASSY LH

(a) Install the front stabilizer link assy LH with the nut.

Torque: 74 N·m (755 kgf·cm, 55 ft·lbf)

HINT:

If the ball joint turns together with the nut, use a hexagon (6 mm) wrench to hold the stud.

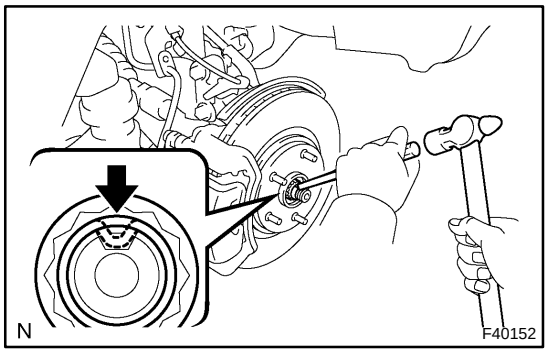

52. INSTALL FRONT AXLE HUB LH NUT

(a) Using a socket wrench (30 mm), install a new axle hub LH nut.

Torque: 294 N·m (2,998 kgf·cm, 217 ft·lbf)

(b) Using a chisel and a hammer, stake the front axle hub LH nut.

53. INSTALL FRONT WHEEL

54. ADD AUTOMATIC TRANSAXLE FLUID (A/T TRANSAXLE)

55. INSPECT AUTOMATIC TRANSAXLE FLUID (A/T TRANSAXLE) (SEE PAGE 40−2)

56. ADD MANUAL TRANSAXLE OIL (M/T TRANSAXLE) (SEE PAGE 41−3)

57. INSPECT MANUAL TRANSAXLE OIL (M/T TRANSAXLE) (SEE PAGE 41−2)

58. INSPECT AND ADJUST FRONT WHEEL ALIGNMENT (SEE PAGE 26−5)

59. CHECK ABS SPEED SENSOR SIGNAL (W/ ABS)

(a) ABS WITH EBD SYSTEM (BOSCH MADE) (SEE PAGE 05−873)

(b) ABS WITH EBD SYSTEM (DENSO MADE) (SEE PAGE 05−933)

(c) ABS WITH EBD & BA & TRAC & VSC SYSTEM (SEE PAGE 05−990)

FRONT AXLE HUB SUB−ASSY LH (From July, 2003)

300M4−03

REPLACEMENT

HINT:

- COMPONENTS: SEE PAGE 30−4
- Use the same procedures for the RH side and LH side.
- The Procedures listed below are for the LH side.

1. REMOVE FRONT WHEEL

2. REMOVE FRONT AXLE HUB LH NUT (SEE PAGE 30−8)

SST 09930−00010

3. DISCONNECT SPEED SENSOR FRONT LH (W/ ABS) (SEE PAGE 30−8)

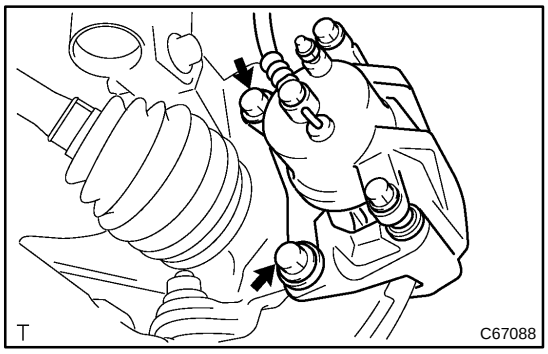

4. SEPARATE FRONT DISC BRAKE CALIPER ASSY LH

(a) Remove the 2 bolts and separate the front disc brake caliper assy LH from the steering knuckle LH.

NOTICE:

Use a string or other device to keep the brake caliper from hanging down by the flexible hose.

5. REMOVE FRONT DISC

6. SEPARATE TIE ROD ASSY LH (SEE PAGE 30−8)

SST 09628−62011

7. SEPARATE FRONT SUSPENSION ARM SUB−ASSY LOWER NO.1 LH (SEE PAGE 30−8)

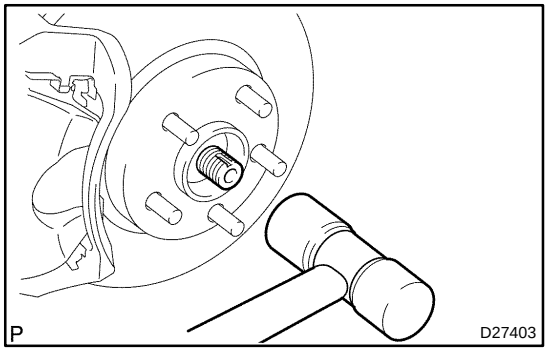

8. REMOVE FRONT AXLE ASSY LH

(a) Using a plastic hammer, separate the front drive shaft assy LH from the front axle hub sub−assy LH.

NOTICE:

Be careful not to damage the boot and speed sensor rotor. (w/ABS)

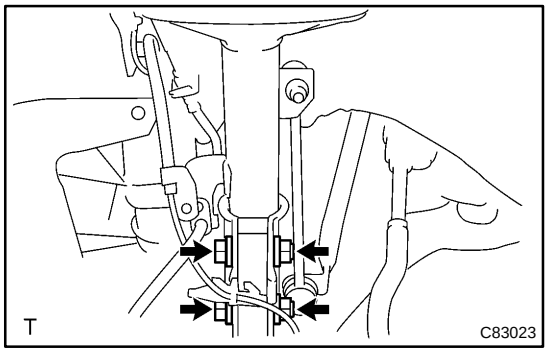

(b) Remove the 2 bolts, nuts and steering knuckle LH with the front axle hub sub−assy LH.

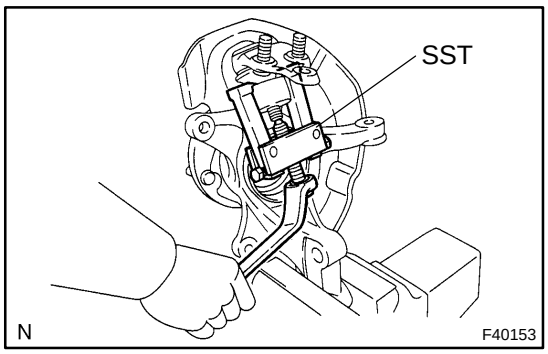

9. REMOVE LOWER BALL JOINT ASSY FRONT LH

(a) Remove the cotter pin and nut.

(b) Using SST, remove the lower ball joint assy front LH.
SST 09628−62011

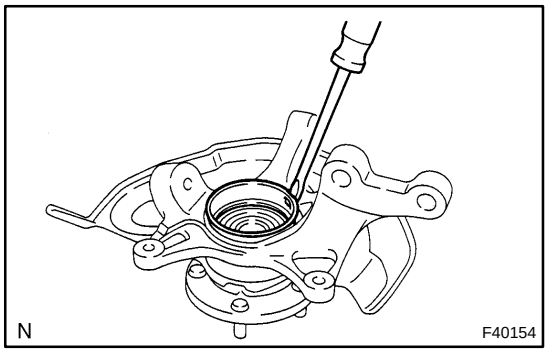

10. REMOVE FRONT WHEEL BEARING DUST DEFLECTOR NO.1 LH

(a) Using a screwdriver, remove the bearing dust deflector No.1 LH.

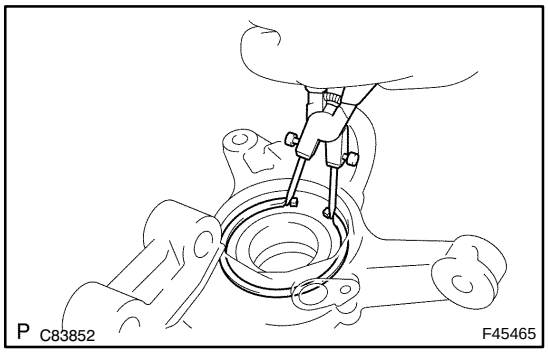

11. REMOVE FRONT AXLE HUB LH HOLE SNAP RING

(a) Using snap ring pliers, remove the front axle hub LH hole snap ring.

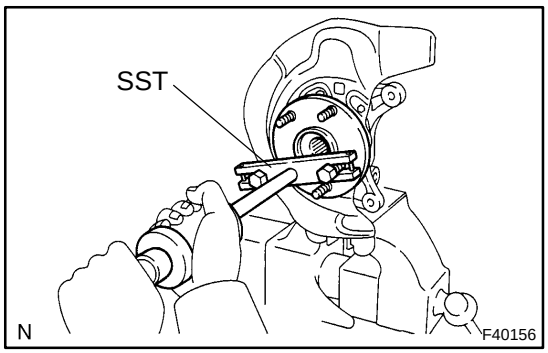

12. REMOVE FRONT AXLE HUB SUB−ASSY LH

(a) Using SST, remove the front axle hub sub−assy LH.
SST 09520−00031

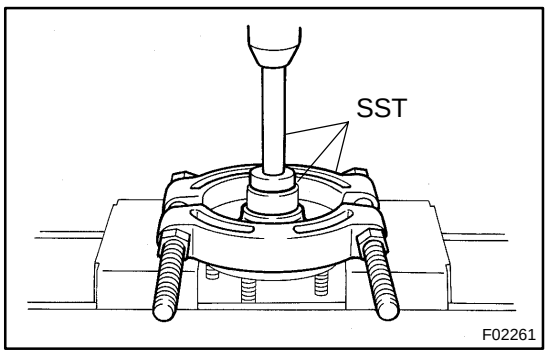

(b) Using SST and a press, remove the bearing inner race (outside) from the front axle hub sub−assy LH.
SST 09950−00020, 09950−60010 (09951−00410), 09950−70010 (09951−07100)

13. REMOVE DISC BRAKE DUST COVER FRONT LH

(a) Using a torx® wrench (T30), remove the 4 bolts and disc brake dust cover front LH.

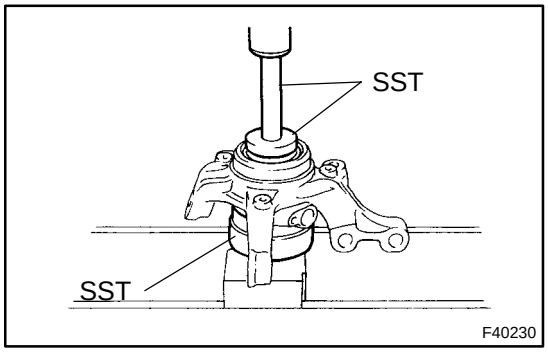

14. REMOVE FRONT AXLE HUB LH BEARING

(a) Place the bearing inner race (outside) on the front axle hub LH bearing.

(b) Using SST and a press, press the front axle hub LH bearing until it contacts the SST.

SST 09527−17011, 09950−60010 (09951−00600), 09950−70010 (09951−07100)

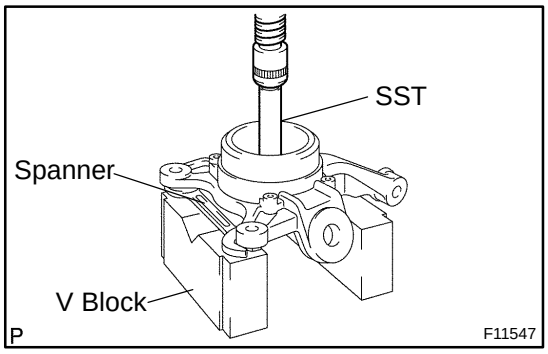

(c) Using a spanner to make the steering knuckle LH horizontal, fix it to the V block, as shown in the illustration.

NOTICE:

Be sure the steering knuckle is horizontally positioned.

(d) Using SST and a press, remove the front axle hub LH bearing.

SST 09527−17011, 09950−60010 (09951−00600), 09950−70010 (09951−07100)

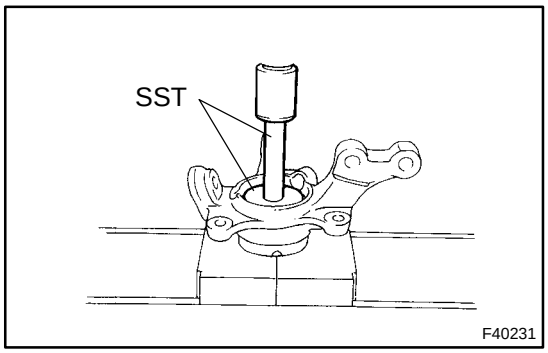

15. INSTALL FRONT AXLE HUB LH BEARING

(a) Using SST and a press, install a new front axle hub LH bearing to the steering knuckle LH.

SST 09950−60020 (09951−00790), 09950−70010 (09951−07100)

16. INSTALL DISC BRAKE DUST COVER FRONT LH

(a) Place the disc brake dust cover front LH and using a torx® wrench (T30), torque the 4 bolts.

Torque: 8.3 N·m (85 kgf·cm, 73 in.·lbf)

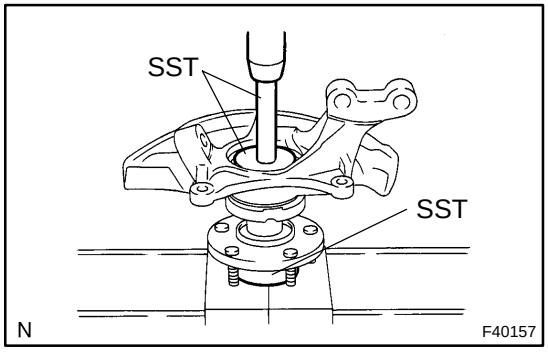

17. INSTALL FRONT AXLE HUB SUB−ASSY LH

(a) Using SST and a press, install the front axle hub sub−assy LH.

SST 09608−32010, 09950−60020 (09951−00790), 09950−70010 (09951−07100)

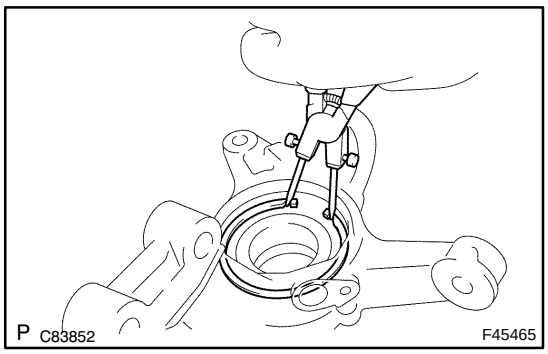

18. INSTALL FRONT AXLE HUB LH HOLE SNAP RING

(a) Using snap ring pliers, install a new front axle hub LH hole snap ring.

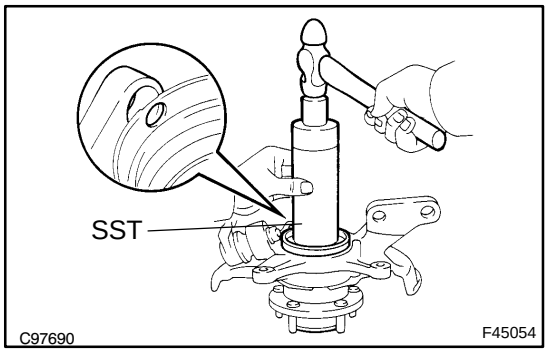

19. FRONT WHEEL BEARING DUST DEFLECTOR NO.1 LH

(a) Using SST and a hammer, install the bearing dust deflector No.1 LH.

SST 09316−60011 (09316−00011, 09316−00031), 09608−32010

HINT:

Align the hole for the speed sensor in the bearing dust deflector No.1 LH with the steering knuckle.

20. INSTALL LOWER BALL JOINT ASSY FRONT LH

(a) Install the lower ball joint assy front LH and tighten the nut.

Torque: 123 N·m (1,254 kgf·cm, 91 ft·lbf)

(b) Install a new cotter pin.

NOTICE:

If the holes for the cotter pin are not aligned, further tighten the nut up to 60 .

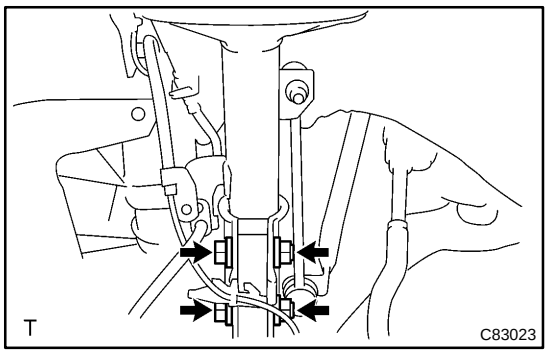

21. INSTALL FRONT AXLE ASSY LH

(a) Install front axle assy LH with the 2 bolts and nuts to the shock absorber assy front LH.

Torque: 210 N·m (2,141 kgf·cm, 155 ft·lbf)

NOTICE:

- **Only when reusing the bolts and nuts, apply the small amount of engine oil to the screw part of the nuts.**
- **Do not excessively push out the front axle assy LH.**
- **Be careful not to damage the outboard joint boot.**
- **Be careful not to damage the speed sensor rotor.**

22. INSTALL FRONT SUSPENSION ARM SUB−ASSY LOWER NO.1 LH (SEE PAGE 30−8)

23. INSTALL TIE ROD ASSY LH (SEE PAGE 30−8)

24. INSTALL FRONT DISC

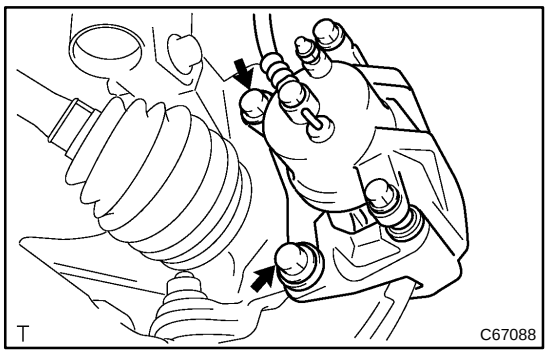

25. INSTALL FRONT DISC BRAKE CALIPER ASSY LH

(a) Install the front disc brake caliper assy LH with the 2 bolts to the steering knuckle LH.
Torque: 107 N·m (1,090 kgf·cm, 79 ft·lbf)

26. INSTALL FRONT AXLE HUB LH NUT

(a) Using a socket wrench (30 mm), install a new axle hub LH nut.
Torque: 294 N·m (2,998 kgf·cm, 217 ft·lbf)

27. SEPARATE FRONT DISC BRAKE CALIPER ASSY LH

(a) Remove the 2 bolts and separate the front disc brake caliper assy LH from the steering knuckle LH.

NOTICE:

Use a string or other device to keep the brake caliper from hanging down.

28. REMOVE FRONT DISC

29. INSPECT BEARING BACKLASH (SEE PAGE 30−2)

30. INSPECT AXLE HUB DEVIATION (SEE PAGE 30−2)

31. INSTALL FRONT DISC

32. INSTALL FRONT DISC BRAKE CALIPER ASSY LH

(a) Install the front disc brake caliper assy LH with the 2 bolts to the steering knuckle LH.
Torque: 107 N·m (1,090 kgf·cm, 79 ft·lbf)

33. INSTALL SPEED SENSOR FRONT LH (W/ ABS) (SEE PAGE 30−8)

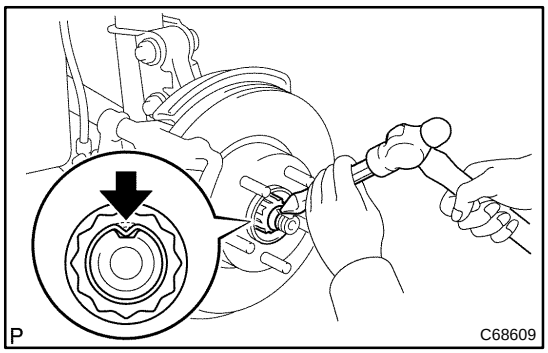

34. INSTALL FRONT AXLE HUB LH NUT

(a) Using a socket wrench (30 mm), install a new axle hub LH nut.
Torque: 294 N·m (2,998 kgf·cm, 217 ft·lbf)

(b) Using a chisel and a hammer, stake the axle hub LH nut.

35. INSTALL FRONT WHEEL

36. INSPECT AND ADJUST FRONT WHEEL ALIGNMENT (SEE PAGE 26−5)

37. CHECK ABS SPEED SENSOR SIGNAL (W/ ABS)

(a) ABS WITH EBD SYSTEM (BOSCH MADE) (SEE PAGE 05−873)

(b) ABS WITH EBD SYSTEM (DENSO MADE) (SEE PAGE 05−933)

(c) ABS WITH EBD & BA & TRAC & VSC SYSTEM (SEE PAGE 05−990)

FRONT AXLE LH HUB BOLT

30020−08

REPLACEMENT

HINT:

- COMPONENTS: SEE PAGE 30−4
- Replace the RH side by the same procedures with LH side.

1. REMOVE FRONT WHEEL

2. DISCONNECT FRONT DISC BRAKE CALIPER ASSY LH(SEE PAGE 30−8)

3. REMOVE FRONT DISC

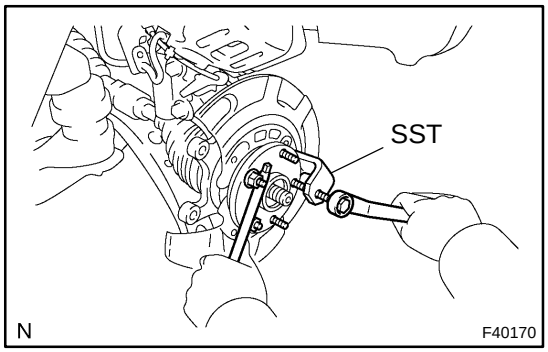

4. REMOVE FRONT AXLE LH HUB BOLT

(a) Using SST and a screwdriver or an equivalent to hold, remove the front axle LH hub bolt.
SST 09628−10011

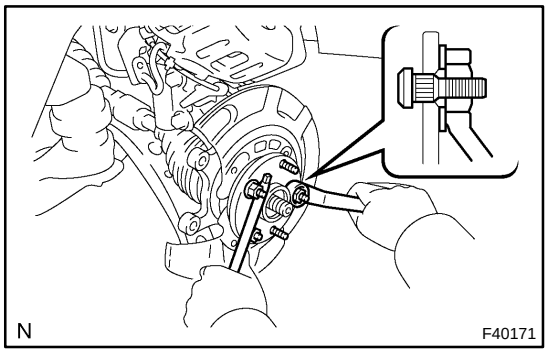

5. INSTALL FRONT AXLE LH HUB BOLT

(a) Install a washer and nut to a new front axle LH hub bolt as shown in the illustration.

(b) Using a screwdriver to hold, install the hub bolt by torquing the nut.

6. INSTALL FRONT DISC

7. INSTALL FRONT DISC BRAKE CALIPER ASSY LH(SEE PAGE 30−8)

8. INSTALL FRONT WHEEL
Torque: 103 N·m (1,050 kgf·cm, 76 ft·lbf)

REAR AXLE HUB & BEARING ASSY LH

3006I−05

REPLACEMENT

HINT:

- COMPONENTS: SEE PAGE 30−4
- Replace the RH side by the same procedures with the LH side.

1. REMOVE REAR WHEEL

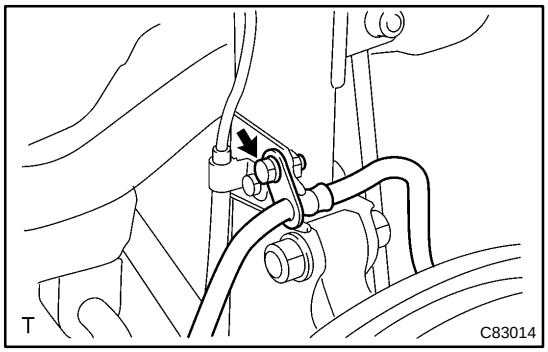

2. DISCONNECT REAR DISC BRAKE CALIPER ASSY LH (DISC REAR BRAKE TYPE)

(a) Remove the bolt and disconnect the rear flexible hose.

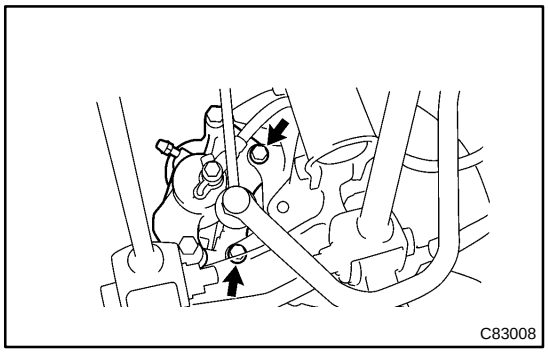

(b) Remove the 2 bolts and rear disc brake caliper assy LH.

(c) Support the brake caliper assy LH securely.

3. REMOVE REAR DISC (DISC REAR BRAKE TYPE)

4. REMOVE REAR BRAKE DRUM SUB−ASSY (DRUM REAR BRAKE TYPE)

5. DISCONNECT SKID CONTROL SENSOR WIRE (W/ ABS)

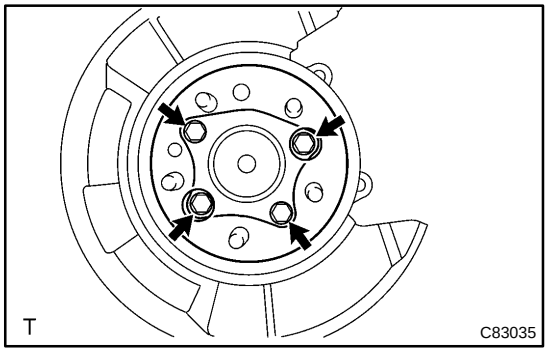

6. REMOVE REAR AXLE HUB & BEARING ASSY LH

(a) Remove the 4 bolts and rear axle hub LH & bearing assy LH.

7. REMOVE SKID CONTROL SENSOR (W/ ABS)(SEE PAGE 32−68)

8. INSTALL SKID CONTROL SENSOR (W/ ABS)(SEE PAGE 32−68)

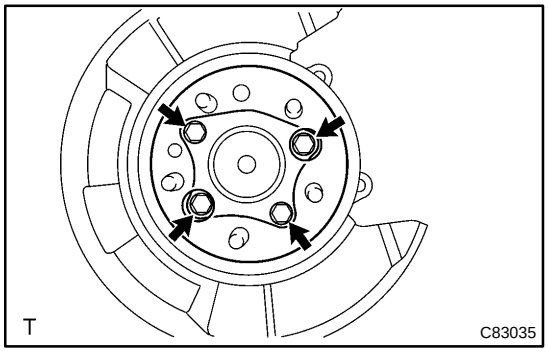

9. INSTALL REAR AXLE HUB & BEARING ASSY LH

(a) Install the rear axle hub LH & bearing assy LH with the 4 bolts.

Torque: 80 N·m (816 kgf·cm, 59 ft·lbf)

10. INSTALL SKID CONTROL SENSOR WIRE (W/ ABS)

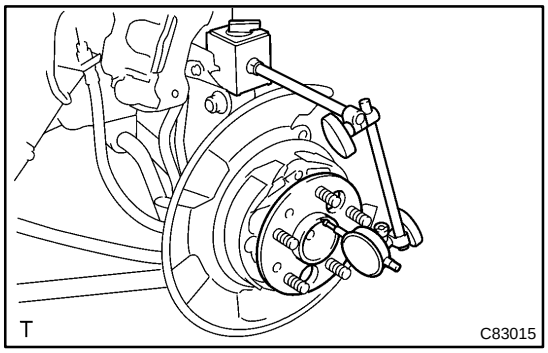

11. INSPECT BEARING BACKLASH

(a) Set a dial indicator near the center of the axle hub and check the backlash in the bearing shaft direction.

Maximum: 0.05 mm (0.0020 in.)

If the backlash exceeds the maximum, replace the axle hub assembly.

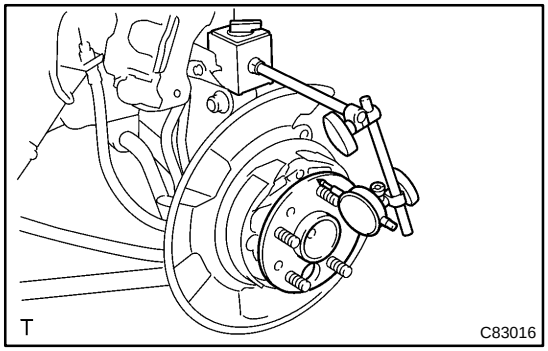

12. INSPECT AXLE HUB DEVIATION

(a) Using a dial indicator, check the deviation at the surface of the axle hub outside the hub bolt.

Maximum: 0.07 mm (0.0028 in.)

If the backlash exceeds the maximum, replace the axle hub assembly.

13. INSTALL REAR DISC (DISC REAR BRAKE TYPE)

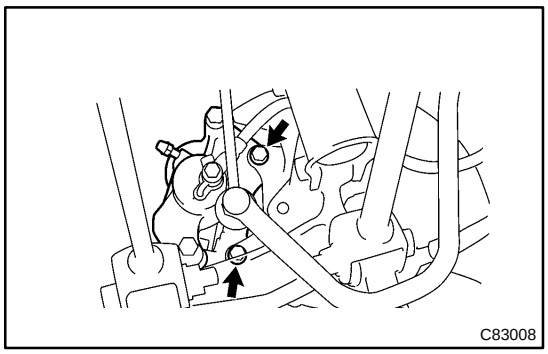

14. INSTALL REAR DISC BRAKE CALIPER ASSY LH (DISC REAR BRAKE TYPE)

(a) Install the rear disc brake caliper assy LH with the 2 bolts.
Torque: 62 N·m (630 kgf·cm, 46 ft·lbf)

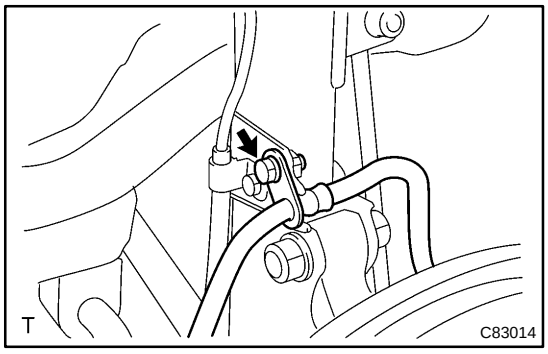

(b) Install the rear flexible hose with the bolt.
Torque: 19 N·m (192 kgf·cm, 14 ft·lbf)

15. INSTALL REAR BRAKE DRUM SUB−ASSY (DRUM REAR BRAKE TYPE)

16. INSTALL REAR WHEEL
Torque: 103 N·m (1,050 kgf·cm, 76 ft·lbf)

17. INSPECT AND ADJUST REAR WHEEL ALIGNMENT(SEE PAGE 27−3)

18. CHECK ABS SPEED SENSOR SIGNAL (W/ ABS)

(a) ABS WITH EBD SYSTEM (BOSCH MADE) (SEE PAGE 05−873)

(b) ABS WITH EBD SYSTEM (DENSO MADE) (SEE PAGE 05−933)

(c) ABS WITH EBD & BA & TRAC & VSC SYSTEM (SEE PAGE 05−990)

REAR AXLE LH HUB BOLT

30024−06

REPLACEMENT

HINT:

- COMPONENTS: SEE PAGE 30−4
- Replace the RH side by the same procedures with the LH side.

1. REMOVE REAR WHEEL

2. REMOVE REAR DISC BRAKE CALIPER ASSY LH (DISC REAR BRAKE TYPE) (SEE PAGE 30−29)

3. REMOVE REAR DISC (DISC REAR BRAKE TYPE)

4. REMOVE REAR BRAKE DRUM SUB−ASSY (DRUM REAR BRAKE TYPE)

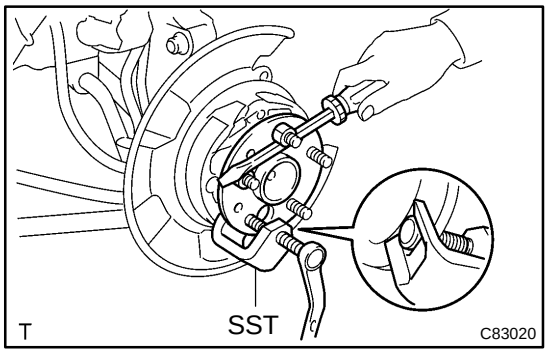

5. REMOVE REAR AXLE LH HUB BOLT

(a) Using SST and a screwdriver or an equivalent to hold, remove the rear axle LH hub bolt.
SST 09628−10011

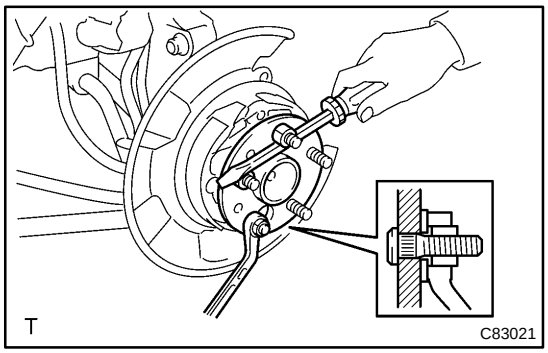

6. INSTALL REAR AXLE LH HUB BOLT

(a) Install a washer and nut to a new rear axle LH hub bolt as shown in the illustration.

(b) Using a screwdriver to hold, install the rear axle LH hub bolt by torquing the nut.

7. INSTALL REAR DISC (DISC REAR BRAKE TYPE)

8. INSTALL REAR DISC BRAKE CALIPER ASSY LH (DISC REAR BRAKE TYPE) (SEE PAGE 30−29)

9. INSTALL REAR BRAKE DRUM SUB−ASSY (DRUM REAR BRAKE TYPE)

10. INSTALL REAR WHEEL
Torque: 103 N·m (1,050 kgf·cm, 76 ft·lbf)

REAR AXLE CARRIER SUB−ASSY LH

3006J−07

REPLACEMENT

HINT:

- COMPONENTS: SEE PAGE 30−4
- Replace the RH side by the same procedures with the LH side.

1. REMOVE REAR WHEEL

2. REMOVE STRUT ROD ASSY REAR(SEE PAGE 27−18)

3. DISCONNECT REAR DISC BRAKE CALIPER ASSY LH (DISC REAR BRAKE TYPE) (SEE PAGE 30−29)

4. REMOVE REAR DISC (DISC REAR BRAKE TYPE)

5. REMOVE REAR BRAKE DRUM SUB−ASSY (DRUM REAR BRAKE TYPE)

6. DISCONNECT SKID CONTROL SENSOR WIRE (W/ ABS)

7. DISCONNECT REAR BRAKE TUBE NO.4 (DRUM REAR BRAKE TYPE)

(a) Using SST, disconnect the rear brake tube No.4 from the LH front or upper rear wheel brake cylinder assy.

SST 09023−00101

8. REMOVE REAR AXLE HUB & BEARING ASSY LH(SEE PAGE 30−29)

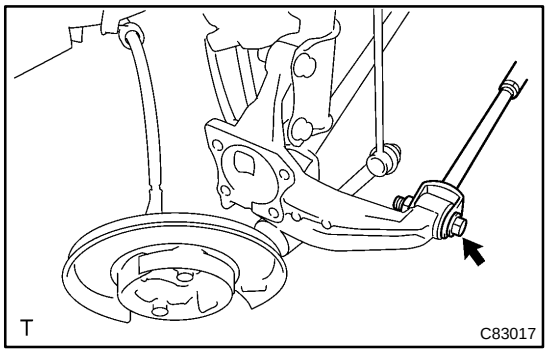

9. DISCONNECT REAR SUSPENSION ARM ASSY NO.2 LH

(a) Remove the bolt, nut and rear suspension arm assy No.2 LH from the rear axle carrier sub−assy LH.

HINT:

While fixing the nut, turn and remove the bolt.

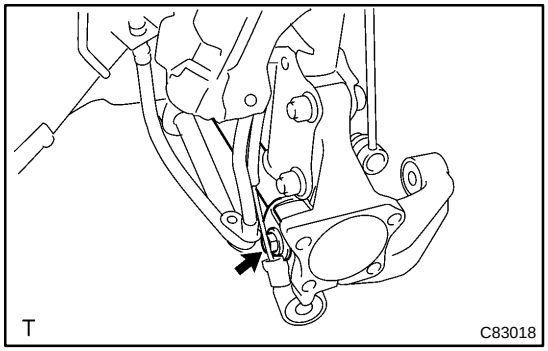

10. DISCONNECT REAR SUSPENSION ARM ASSY NO.1 LH

(a) Remove the bolt, nut and rear suspension arm assy No.1 LH from the rear axle carrier sub−assy LH.

HINT:

While fixing the nut, turn and remove the bolt.

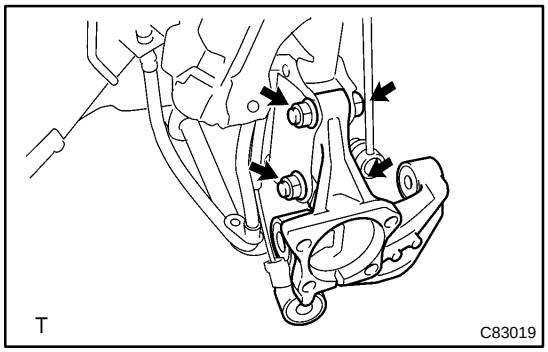

11. REMOVE REAR AXLE CARRIER SUB−ASSY LH

(a) Remove the 2 bolts, nuts and rear axle carrier sub−assy LH from the shock absorber assy rear LH.

NOTICE:

When removing bolt, stop the bolt from rotating and loosen the nut.

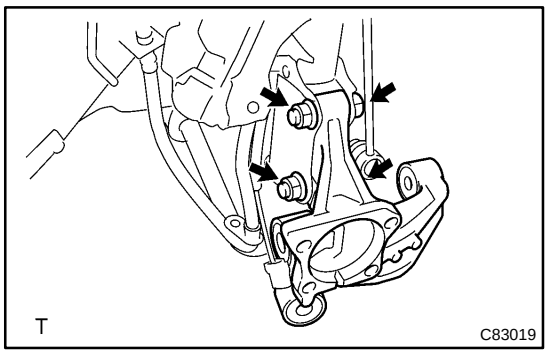

12. INSTALL REAR AXLE CARRIER SUB−ASSY LH

(a) Install the rear axle carrier sub−assy LH with the 2 bolts and nuts.

Torque: 255 N·m (2,600 kgf·cm, 188 ft·lbf)

NOTICE:

When installing bolt, stop the bolt from rotating and torque the nut.

HINT:

Insert the bolt from the rear side of the vehicle and install the nut.

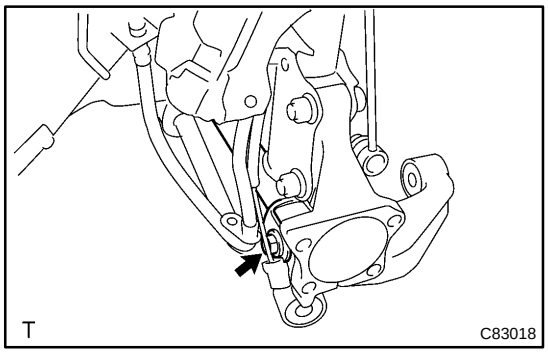

13. TEMPORARILY TIGHTEN REAR SUSPENSION ARM ASSY NO.1 LH

(a) Install the rear suspension arm No.1 to the rear axle carrier sub−assy LH with the bolt and nut, temporarily tighten the bolt.

HINT:

Insert the bolt from the front side of the vehicle and while fixing the nut, turn and install the bolt.

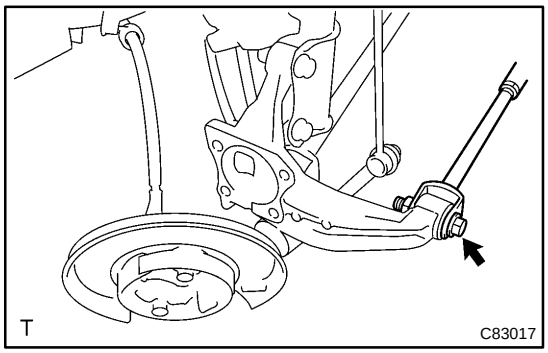

14. TEMPORARILY TIGHTEN REAR SUSPENSION ARM ASSY NO.2 LH

(a) Install the rear suspension arm No.2 to the rear axle carrier sub−assy LH with the bolt and nut, temporarily tighten the bolt.

HINT:

Insert the bolt from the rear side of the vehicle and while fixing the nut, turn and install the bolt.

15. INSTALL REAR AXLE HUB & BEARING ASSY LH(SEE PAGE 30−29)

16. INSTALL REAR BRAKE TUBE NO.4 (DRUM REAR BRAKE TYPE)

(a) Using SST, install the rear brake tube No.4 to the LH front or upper rear wheel brake cylinder assy.

Torque: 15 N·m (155 kgf·cm,11 ft·lbf)

SST 09023−00101

17. INSTALL SKID CONTROL SENSOR WIRE (W/ ABS)

18. INSTALL REAR DISC (DISC REAR BRAKE TYPE)

19. INSTALL REAR DISC BRAKE CALIPER ASSY LH (DISC REAR BRAKE TYPE) (SEE PAGE 30−29)

20. INSTALL REAR BRAKE DRUM SUB−ASSY (DRUM REAR BRAKE TYPE)

21. TEMPORARILY TIGHTEN STRUT ROD ASSY REAR(SEE PAGE 27−18)

22. STABILIZE SUSPENSION(SEE PAGE 27−18)

23. FULLY TIGHTEN REAR SUSPENSION ARM ASSY NO.1 LH(SEE PAGE 27−10)

24. FULLY TIGHTEN REAR SUSPENSION ARM ASSY NO.2 LH(SEE PAGE 27−14)

25. FULLY TIGHTEN STRUT ROD ASSY REAR(SEE PAGE 27−18)

26. FILL RESERVOIR WITH BRAKE FLUID (DRUM REAR BRAKE TYPE)

27. BLEED MASTER CYLINDER (DRUM REAR BRAKE TYPE)(SEE PAGE 32−4)

SST 09023−00101

28. BLEED BRAKE LINE (DRUM REAR BRAKE TYPE)

29. CHECK FLUID LEVEL IN RESERVOIR (DRUM REAR BRAKE TYPE)

30. CHECK BRAKE FLUID LEAKAGE (DRUM REAR BRAKE TYPE)

31. INSTALL REAR WHEEL

Torque: 103 N·m (1,050 kgf·cm, 76 ft·lbf)

32. INSPECT AND ADJUST REAR WHEEL ALIGNMENT(SEE PAGE 27−3)

33. CHECK ABS SPEED SENSOR SIGNAL (W/ ABS)

(a) ABS WITH EBD SYSTEM (BOSCH MADE) (SEE PAGE 05−873)

(b) ABS WITH EBD SYSTEM (DENSO MADE) (SEE PAGE 05−933)

(c) ABS WITH EBD & BA & TRAC & VSC SYSTEM (SEE PAGE 05−990)

BRAKE SYSTEM

32038−12

PRECAUTION

- **Care must be taken to replace each part properly as it could affect the performance of the brake system and result in a driving hazard. Replace the parts with parts having the same part number or equivalent.**
- **It is very important to keep parts and the area clean when repairing the brake system.**
- **If the vehicle is equipped with a mobile communication system, refer to the precaution in the INTRODUCTION section.**

32039−17

PROBLEM SYMPTOMS TABLE

Use the table below to help you find the cause of the problem. The numbers indicate the priority of the likely cause of the problem. Check each part in order. If necessary, replace these parts.

Symptom	Suspect Area	See page
Low pedal or spongy pedal	1. Fluid leaks for brake system	−
	2. Air in brake system	32−4
	3. Piston seals (Worn or damaged)	32−35
		32−44
	4. Rear brake shoe clearance (Out of adjustment)	32−50
	5. Master cylinder (Fauly)	32−23
	6. Booster push rod (Out of adjustment)	32−23
Brake drag	1. Brake pedal freeplay (Minimal)	32−8
		32−14
	2. Parking brake pedal travel (Out of adjustment)	33−19
	3. Parking brake wire (Sticking)	33−10
		33−14
		33−17
	4. Rear brake shoe clearance (Out of adjustment)	32−50
	5. Parking brake shoe clearance (Out of adjustment)	33−19
	6. Pad or lining (Cracked or distorted)	32−35
		32−44
		32−50
	7. Piston (Stuck)	32−35
		32−44
	8. Piston (Frozen)	32−35
		32−44
	9. Anchor, tension or return spring (Faulty)	33−19
		32−50
	10. Booster push rod (Out adjustment)	32−23
	11. Master cylinder (Faulty)	32−23
Brake pull	1. Piston (Stuck)	32−35
		32−44
	2. Pad or lining (Oily)	32−35
		32−44
		32−50
	3. Piston (Frozen)	32−35
		32−44
	4. Disc (Scored)	32−35
		32−44
	5. Pad or lining (Cracked or distorted)	32−35
		32−44
		32−50

Hard pedal but brake inefficient	1. Fluid leaks for brake system	−
	2. Air in brake system	32−4
	3. Pad or lining (Worn)	32−35 32−44 32−50
	4. Pad or lining (Cracked or distorted)	32−35 32−44 32−50
	5. Rear brake shoe clearance (Out of adjustment)	32−50
	6. Pad or lining (Oily)	32−35 32−44 32−50
	7. Pad or lining (Glanzed)	32−35 32−44 32−50
	8. Disc (Scored)	32−35 32−44
	9. Booster push rod (Out of adjustment)	32−23
Noise from brakes	1. Pad on lining (Cracked or distorted)	32−35 32−44 32−50
	2. Installation bolt (Loose)	32−35 32−44
	3. Disc (Scored)	32−35 32−44
	4. Pad support plate (Loose)	32−35 32−44
	5. Sliding pin (Worn)	32−35 32−44
	6. Pad or lining (dirty)	32−35 32−44 32−50
	7. Pad or lining (Glanzed)	32−35 32−44 32−50
	8. Anchor, tension or return spring (Faulty)	32−50 33−19
	9. Anti−squeal shim (Damaged)	32−35 32−44
	10.Shoe hold−down spring (Damaged)	32−50 33−19

BRAKE FLUID

3211S−02

BLEEDING

HINT:

If any work is done on the brake system or if air in the brake lines is suspected, bleed the air from the system.

NOTICE:

Wash off the brake fluid immediately if it comes into contact with a painted surface.

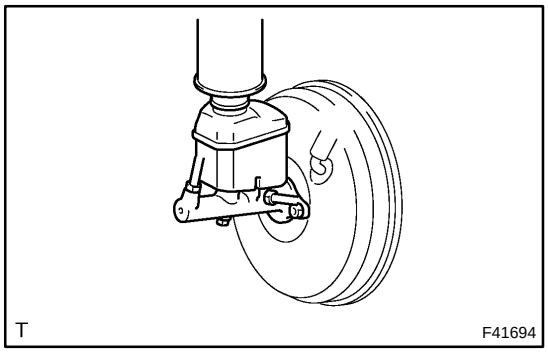

1. FILL RESERVOIR WITH BRAKE FLUID

Fluid: SAE J1703 or FMVSS No. 116 DOT3

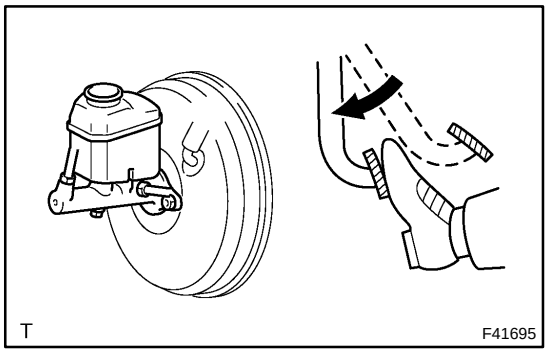

2. BLEED MASTER CYLINDER

HINT:

If the master cylinder has been disassembled or if the reservoir becomes empty, bleed the air from the master cylinder.

(a) Remove the air cleaner assembly with hose.

(b) Disconnect the brake lines from the master cylinder.
SST 09023−00101

(c) Slowly depress the brake pedal and hold it.

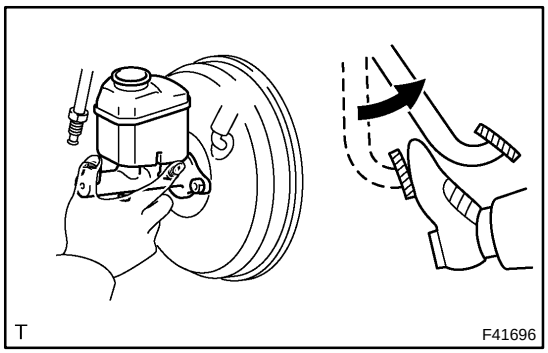

(d) Block off the outer holes with your fingers, and release the brake pedal.

(e) Repeat (c) and (d) 3 or 4 times.

(f) Install the air cleaner assembly with hose.

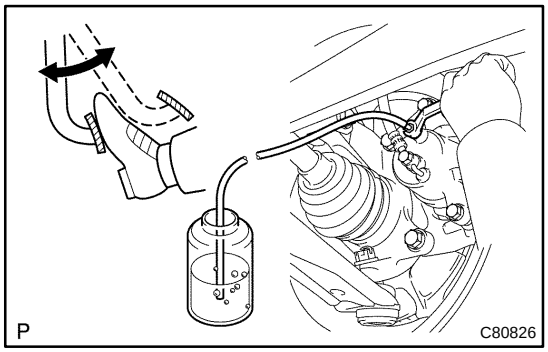

3. BLEED BRAKE LINE

(a) Connect the vinyl tube to the brake caliper.

(b) Depress the brake pedal several times, then loosen the bleeder plug with the pedal held down.

(c) At the point when fluid stops coming out, tighten the bleeder plug, then release the brake pedal.

(d) Repeat (b) and (c) until all the air in the fluid has been bled out.

(e) Tighten the bleeder plug completely.
Torque: 8.3 N·m (85 kgf·cm, 74 in.·lbf)

(f) Repeat the above procedure to bleed the air out of the brake line for each wheel.

4. BLEED BRAKE ACTUATOR ASSY (W/ VSC)

NOTICE:

After performing the usual air bleeding in the brake system, if the height or feel of the brake pedal cannot be obtained, perform air bleeding in the BRAKE actuator assy with a hand−held tester by following procedures below.

(a) Depress the brake pedal more than 20 times with the engine off.

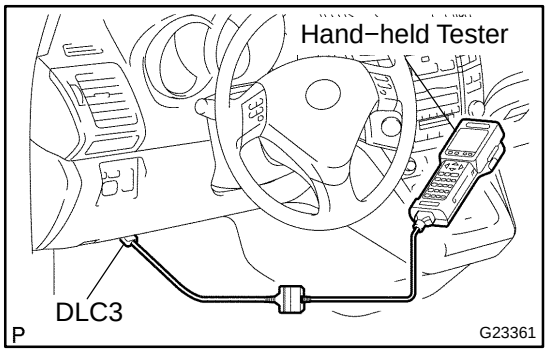

(b) Connect the hand−held tester to the DLC3, then turn the ignition switch to the ON position.

NOTICE:

Do not start the engine.

(c) Select ”AIR BLEEDING” on the hand−held tester.

HINT:

Please refer to the Hand−Held Tester Operator’s Manual for further details.

(d) Bleed the air out of the regular brake line in ”Step1: Increase” on the hand−held tester display.

NOTICE:

- **Perform the air bleeding by following the steps displayed on the hand−held tester.**
- **Make sure that the brake fluid in the master cylinder reservoir tank does not become empty.**

(1) Connect the vinyl tube to either one of the bleeder plugs.

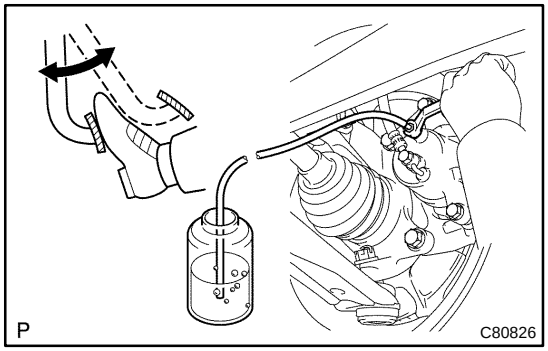

(2) Depress the brake pedal several times, then loosen the bleeder plug of one of the above wheels with the pedal depressed.

(3) When fluid stops coming out, tighten the bleeder plug, then release the brake pedal.

(4) Repeat (2) and (3) until all air in the fluid is completely bled out.

(5) Tighten the bleeder plug completely.

Torque: 8.3 N·m (85 kgf·cm, 73 in.·lbf)

(6) Repeat the above procedure to bleed the air out of the brake line for each wheel.

(e) Bleed the air out of the suction line in ”Step2: Inhalation” on the hand−held tester display.

NOTICE:

- **Perform the air bleeding by following the steps displayed on the hand−held tester.**
- **Make sure that the brake fluid in the master cylinder reservoir tank does not become empty.**

(1) Connect the vinyl tube to the bleeder plug at the right front wheel or the right rear wheel and loosen the bleeder plug.
(2) Operate the BRAKE actuator assy using the hand−held tester to bleed the air.

NOTICE:

- **The operation stops automatically in 4 seconds.**
- **At this time, be sure to release the brake pedal.**

(3) Check that the operation has stopped, by referring to the hand−held tester display.
(4) Repeat (2) and (3) until all the air in the fluid is completely bled out.
(5) Tighten the bleeder plug completely.

Torque: 8.3 N·m (85 kgf·cm, 73 in.·lbf)

(6) For the rest of the wheels, bleed the air in the same way as stated in the above procedure.

(f) Bleed the air out of the pressure reduction line in ”Step3: Decrease” on the hand−held tester display.

NOTICE:

- **Perform air bleeding by following the steps displayed on the hand−held tester.**
- **Make sure that the brake fluid in the master cylinder reservoir tank does not become empty.**

(1) Connect a vinyl tube to either one of the bleeder plugs.
(2) Loosen the bleeder plug.
(3) Using the hand−held tester, operate the BRAKE actuator assy using hand−held tester, completely depress the brake pedal and keep it.

NOTICE:

- **The operation stops automatically in 4 seconds. When performing this procedure continuously, an interval of at least 20 seconds is required.**
- **When the operation is completed, the brake pedal slightly goes down. This is a normal phenomenon caused when the solenoid opens.**
- **During this procedure, the pedal seems heavy, but completely depress it so that the brake fluid comes out from the bleeder plug.**
- **Be sure to keep depressing the brake pedal. Never depress and release the pedal repeatedly.**

(4) Tighten the bleeder plug, then release the brake pedal.
(5) Repeat (2) to (4) until all the air in the fluid is completely bled out.
(6) Tighten the bleeder plug completely.

Torque: 8.3 N·m (85 kgf·cm, 73 in.·lbf)

(7) Repeat the above procedure to bleed the air out of the brake line for each wheel.

(g) Bleed the air out of the regular brake line again in ”Step4: Increase” on the hand−held tester display.

NOTICE:

- **Perform air bleeding by following the steps displayed on the hand−held tester.**
- **Make sure that the brake fluid in the master cylinder reservoir tank does not become empty.**

(1) Connect the vinyl tube to either one of the bleeder plug.

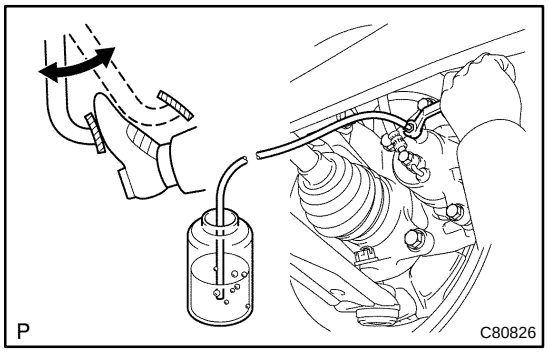

(2) Depress the brake pedal several times, then loosen the bleeder plug of one of the above wheels with the pedal depressed.
(3) When fluid stops coming out, tighten the bleeder plug, then release the brake pedal.
(4) Repeat (2) and (3) until all the air in the fluid is completely bled out.
(5) Tighten the bleeder plug completely.

Torque: 8.3 N·m (85 kgf·cm, 73 in.·lbf)

(6) Repeat the above procedure to bleed the air out of the brake line for each wheel.

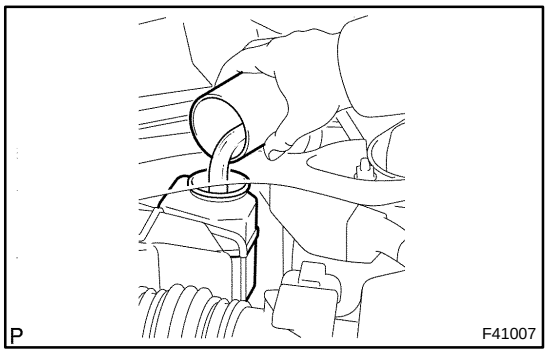

5. CHECK FLUID LEVEL IN RESERVOIR

(a) Check the fluid level and add fluid if necessary.
Fluid: SAE J1703 or FMVSS No. 116 DOT3

BRAKE PEDAL SUPPORT ASSY

321BV−01

ADJUSTMENT

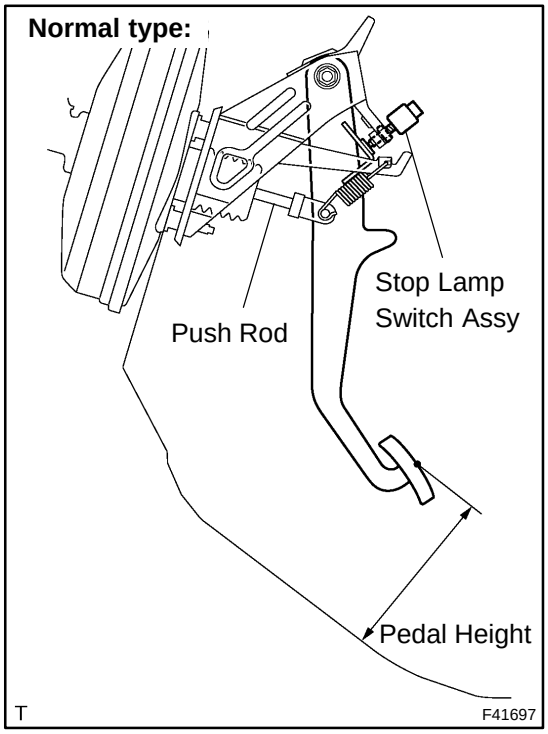

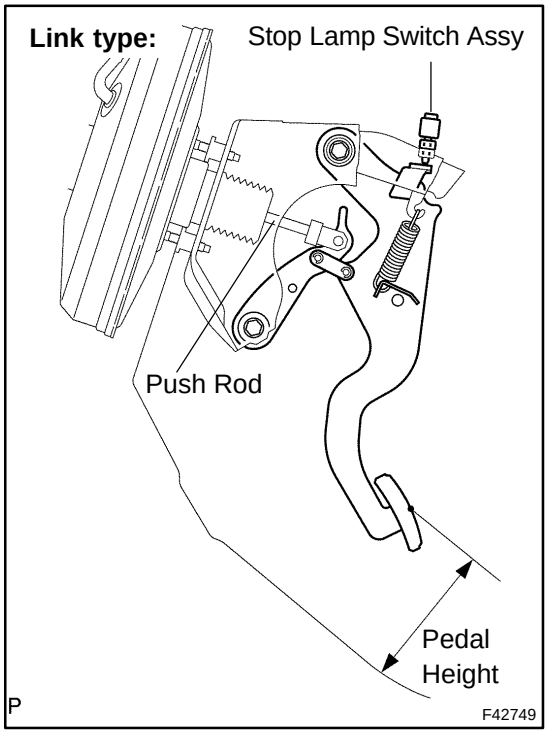

1. CHECK AND ADJUST BRAKE PEDAL HEIGHT

(a) Inspect brake pedal height.

Pedal height from asphalt sheet:
144.1 − 154.1 mm (5.673 − 6.067 in.)

(b) Adjust brake pedal height.

(1) Remove the instrument panel finish panel sub−assy lower and instrument panel insert sub−assy lower LH.

(2) Disconnect the connector from the stop lamp switch assy.

(3) Loosen the stop lamp switch lock nut and remove the stop lamp switch assy.

(4) Loosen the clevis lock nut.

(5) Adjust the pedal height by turning the pedal push rod.

(6) Tighten the push rod lock nut.

Torque: 26 N·m (265 kgf·cm, 19 ft·lbf)

(7) Install the stop lamp switch assy.

(8) Connect the connector to the stop lamp switch assy.

(9) Push the brake pedal in 5 − 10 mm (0.20 − 0.39 in.), turn the stop lamp switch assy to lock the nut in the position where the stop lamp goes off.

(10) After installation, push the brake pedal in 5 − 10 mm (0.20 − 0.39 in.), check that stop lamp lights up.

(11) Install the instrument panel insert sub−assy lower LH and instrument panel finish panel sub−assy lower.

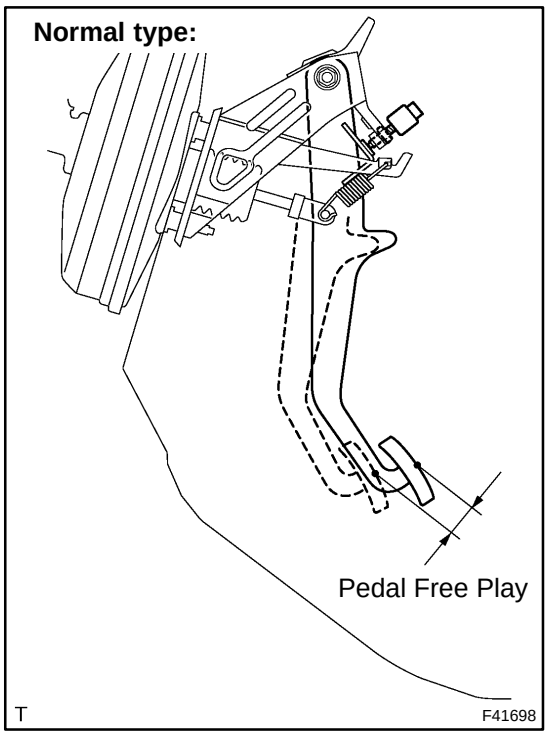

2. CHECK PEDAL FREE PLAY

(a) Stop the engine and depress the brake pedal several times until there is no more vacuum left in the booster.

(b) Push in the pedal until the beginning of the resistance is felt. Measure the distance, as shown.

Pedal free play: 1 − 6 mm (0.04 − 0.24 in.)

If incorrect, check the stop lamp switch assy clearance.

If the clearance is OK, then troubleshoot the brake system.

Stop lamp switch clearance:
0.5 − 2.5 mm (0.020 − 0.098 in.)

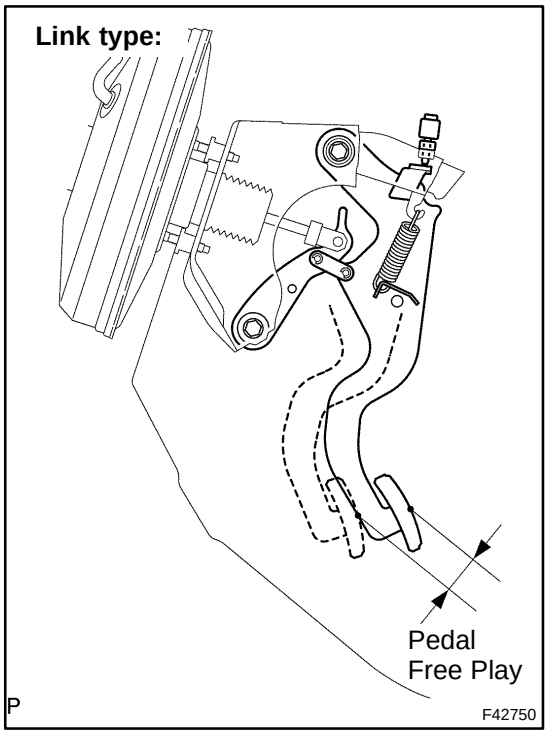

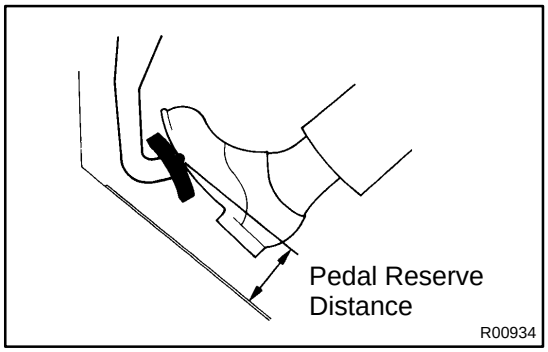

3. CHECK PEDAL RESERVE DISTANCE

(a) Release the parking brake pedal.
With engine running, depress the pedal and measure the pedal reserve distance, as shown.

Pedal reserve distance from asphalt sheet at 490 N (50 kgf, 110.2 lbf): More than 63 mm (2.48 in.)

If incorrect, troubleshoot the brake system.

321BW−01

COMPONENTS

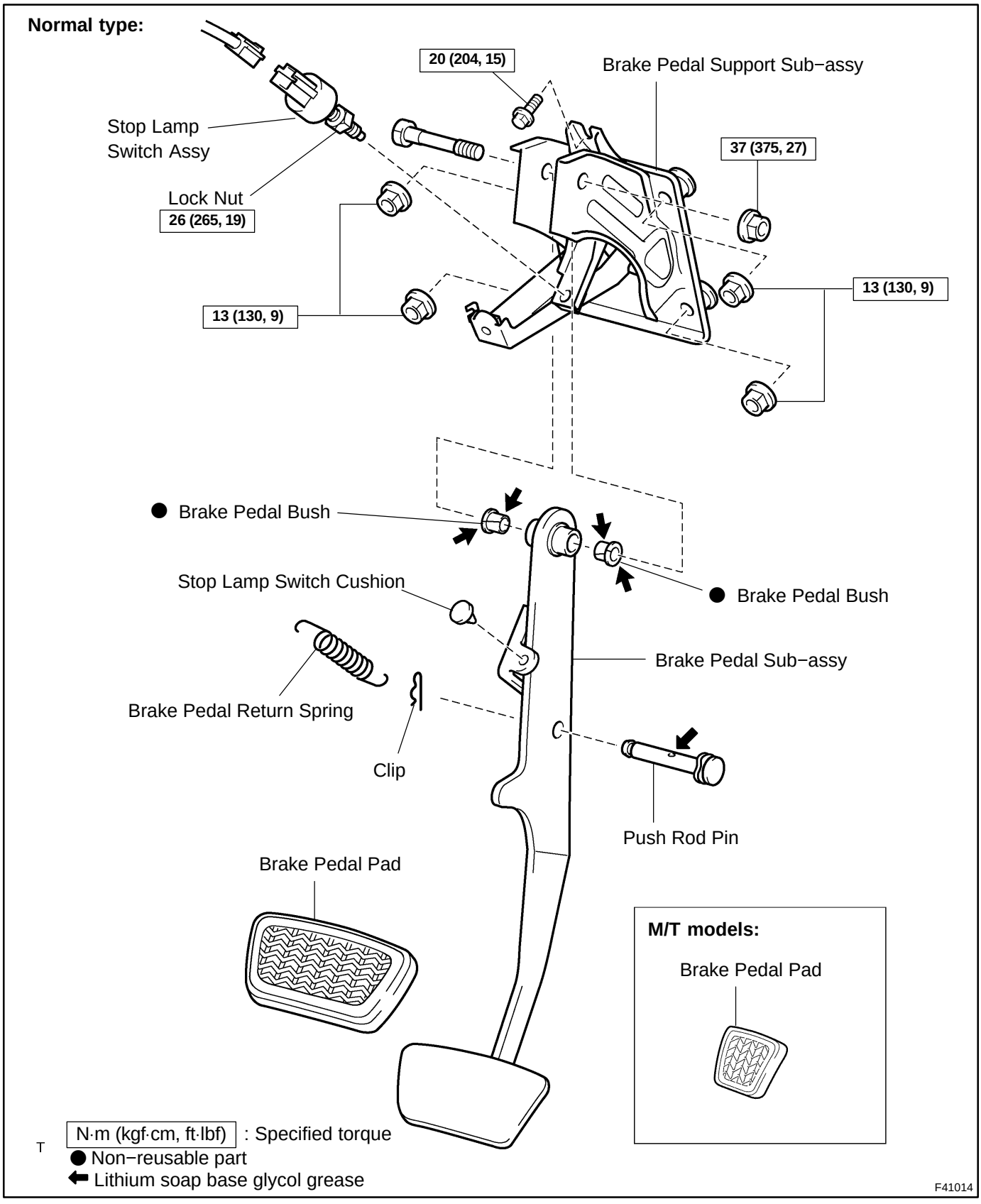

Link type:

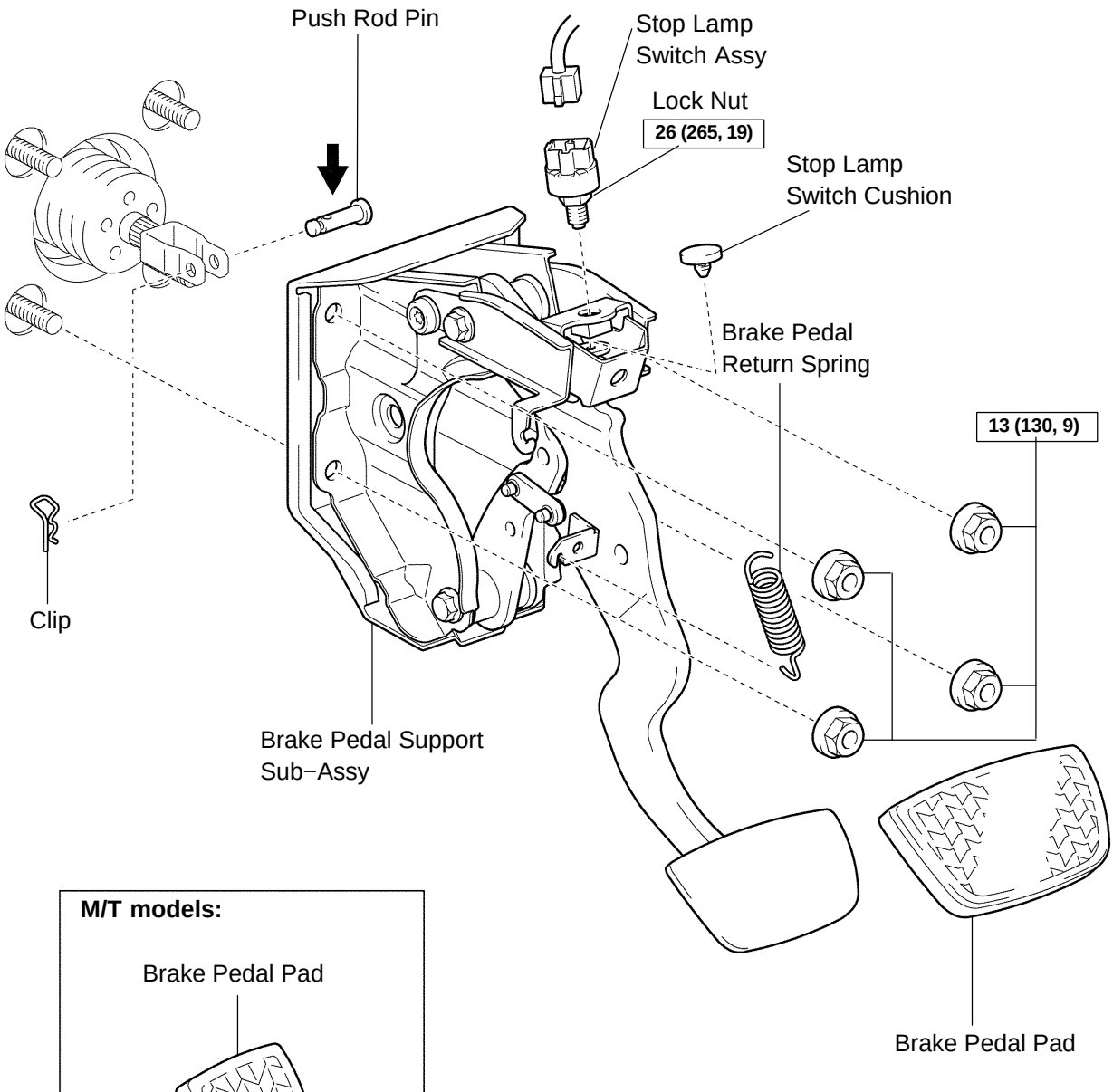

M/T models:

N·m (kgf·cm, ft·lbf) : Specified torque

P ⬅ Lithium soap base glycol grease

F42751

321BX−02

OVERHAUL

1. REMOVE INSTRUMENT PANEL REINFORCEMENT (See page 55−34)

2. REMOVE BRAKE PEDAL RETURN SPRING

3. REMOVE PUSH ROD PIN

(a) Remove the clip and push rod pin.

4. REMOVE BRAKE PEDAL SUPPORT ASSY

(a) Disconnect the stop lamp switch connector.

(b) Normal type:
Remove the bolt, 4 nuts and brake pedal support assy.

(c) Link type:
Remove the 4 nuts and brake pedal support assy.

5. REMOVE STOP LAMP SWITCH ASSY

(a) Loosen the lock nut and remove the stop lamp switch.

6. REMOVE BRAKE PEDAL SUB−ASSY (NORMAL TYPE BRAKE PEDAL)

(a) Remove the nut, bolt and brake pedal sub−assy from brake pedal support sub−assy.

7. REMOVE BRAKE PEDAL PAD

8. REMOVE BRAKE PEDAL BUSH (NORMAL TYPE BRAKE PEDAL)

(a) Remove the 2 brake pedal bushes from brake pedal sub−assy.

9. REMOVE STOP LAMP SWITCH CUSHION

10. INSTALL STOP LAMP SWITCH CUSHION

11. INSTALL BRAKE PEDAL BUSH (NORMAL TYPE BRAKE PEDAL)

(a) Install the new 2 brake pedal bushes to brake pedal sub−assy.

HINT:

Apply the lithium soap base glycol grease to the parts indicates by arrows (See page 32−10).

12. INSTALL BRAKE PEDAL PAD

13. INSTALL BRAKE PEDAL SUB−ASSY (NORMAL TYPE BRAKE PEDAL)

(a) Install the brake pedal sub−assy with the bolt and nut.
Torque: 37 N·m (375 kgf·cm, 27 ft·lbf)

14. INSTALL STOP LAMP SWITCH ASSY

(a) Install the stop lamp switch with the lock nut.
Torque: 26 N·m (265 kgf·cm, 19 ft·lbf)

15. INSTALL BRAKE PEDAL SUPPORT ASSY

(a) Normal type:
Install the brake pedal support assy with the bolt and 4 nuts.
Torque:
Bolt: 20 N·m (204 kgf·cm, 15 ft·lbf)
Nut: 13 N·m (130 kgf·cm, 9 ft·lbf)

(b) Link type:
Install the brake pedal support assy with the 4 nuts.
Torque:
13 N·m (130 kgf·cm, 9 ft·lbf)

16. INSTALL PUSH ROD PIN

(a) Install the push rod pin and clip.

HINT:

Apply the lithium soap base glycol grease to the parts indicates by arrows (See page 32−10).

17. INSTALL BRAKE PEDAL RETURN SPRING

18. INSTALL INSTRUMENT PANEL REINFORCEMENT (See page 55−34)

19. CHECK AND ADJUST BRAKE PEDAL HEIGHT (See page 32−8)

20. CHECK PEDAL FREE PLAY (See page 32−8)

21. CHECK PEDAL RESERVE DISTANCE (See page 32−8)

ACCELERATOR & BRAKE PEDAL ASSY

320MZ−03

ADJUSTMENT

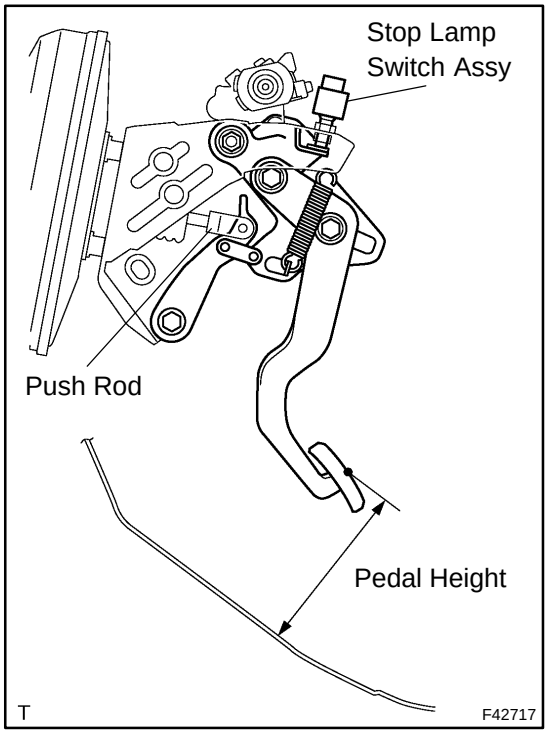

1. CHECK AND ADJUST BRAKE PEDAL HEIGHT

(a) Inspect brake pedal height.

Pedal height from asphalt sheet:
144.1 − 154.1 mm (5.673 − 6.067 in.)

(b) Adjust brake pedal height.

(1) Remove the instrument panel finish panel sub−assy lower and instrument panel insert sub−assy lower LH.

(2) Disconnect the connector from the stop lamp switch assy.

(3) Loosen the stop lamp switch lock nut and remove the stop lamp switch assy.

(4) Loosen the clevis lock nut.

(5) Adjust the pedal height by turning the pedal push rod.

(6) Tighten the push rod lock nut.

Torque: 26 N·m (265 kgf·cm, 19 ft·lbf)

(7) Install the stop lamp switch assy.

(8) Connect the connector to the stop lamp switch assy.

(9) Push the brake pedal in 5 − 10 mm (0.20 − 0.39 in.), turn the stop lamp switch assy to lock the nut in the position where the stop lamp goes off.

(10) After installation, push the brake pedal in 5 − 10 mm (0.20 − 0.39 in.), check that stop lamp lights up.

(11) Install the instrument panel insert sub−assy lower LH and instrument panel finish panel sub−assy lower.

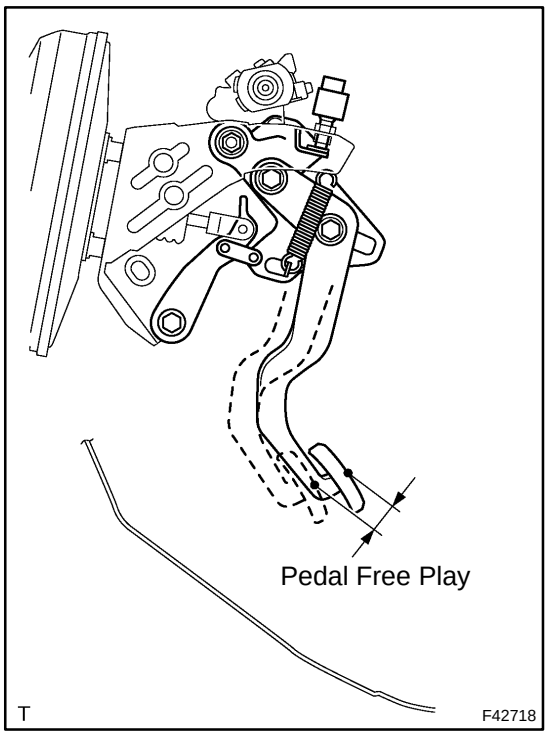

2. CHECK PEDAL FREE PLAY

(a) Stop the engine and depress the brake pedal several times until there is no more vacuum left in the booster.

(b) Push in the pedal until the beginning of the resistance is felt. Measure the distance, as shown.

Pedal free play: 1 − 6 mm (0.04 − 0.24 in.)

If incorrect, check the stop lamp switch assy clearance.

If the clearance is OK, then troubleshoot the brake system.

Stop lamp switch clearance:
0.5 − 2.5 mm (0.020 − 0.098 in.)

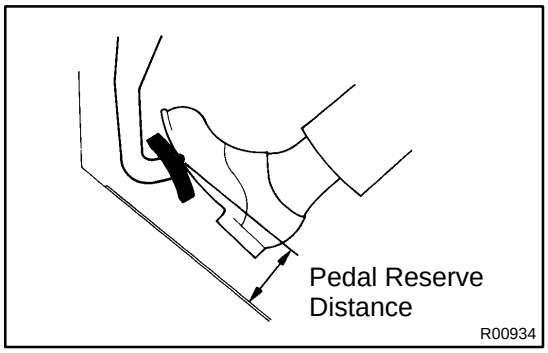

3. CHECK PEDAL RESERVE DISTANCE

(a) Release the parking brake pedal.

With engine running, depress the pedal and measure the pedal reserve distance, as shown.

Pedal reserve distance from asphalt sheet at 490 N (50 kgf, 110.2 lbf): More than 63 mm (2.48 in.)

If incorrect, troubleshoot the brake system.

320N0−03

COMPONENTS

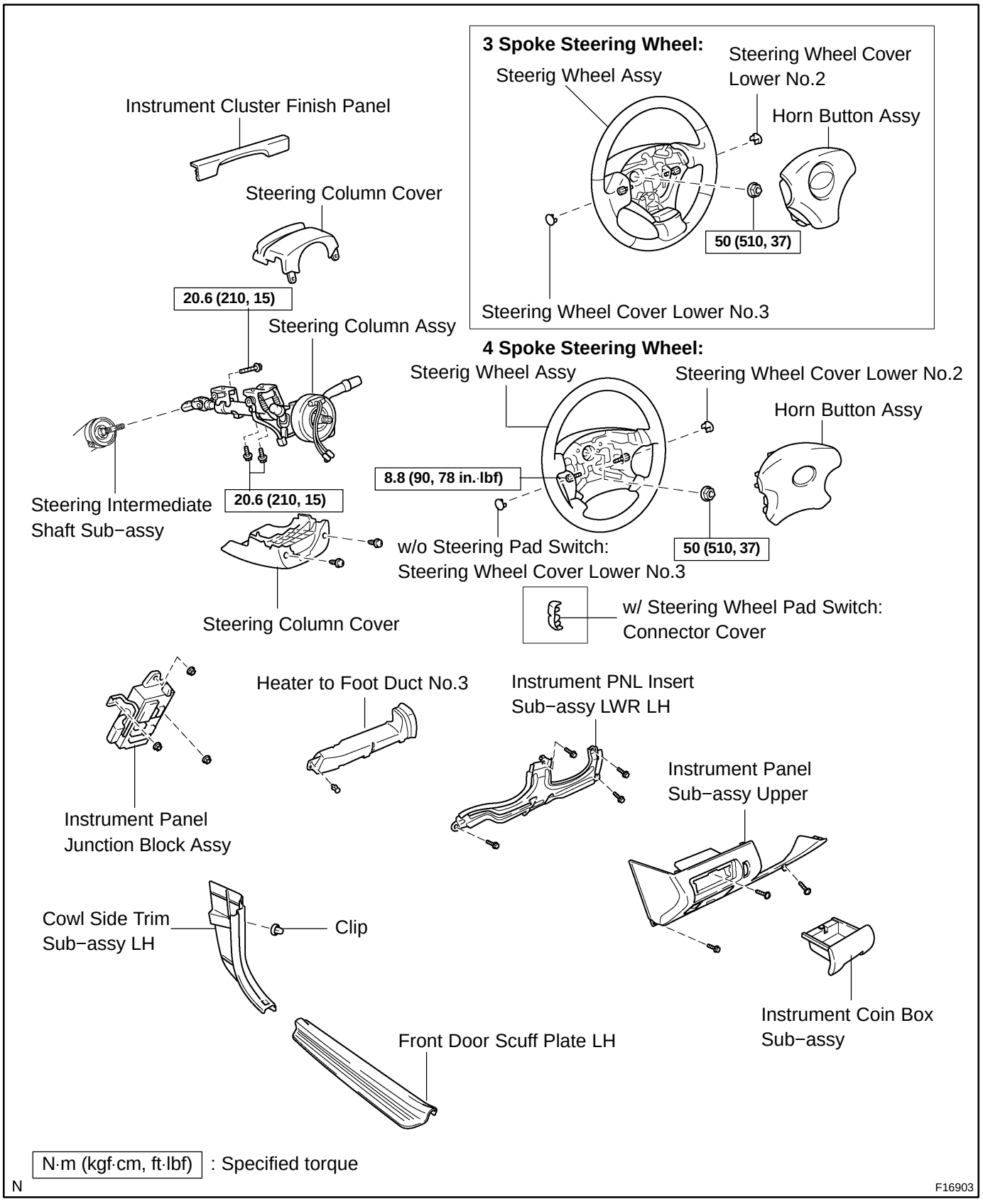

N

F16903

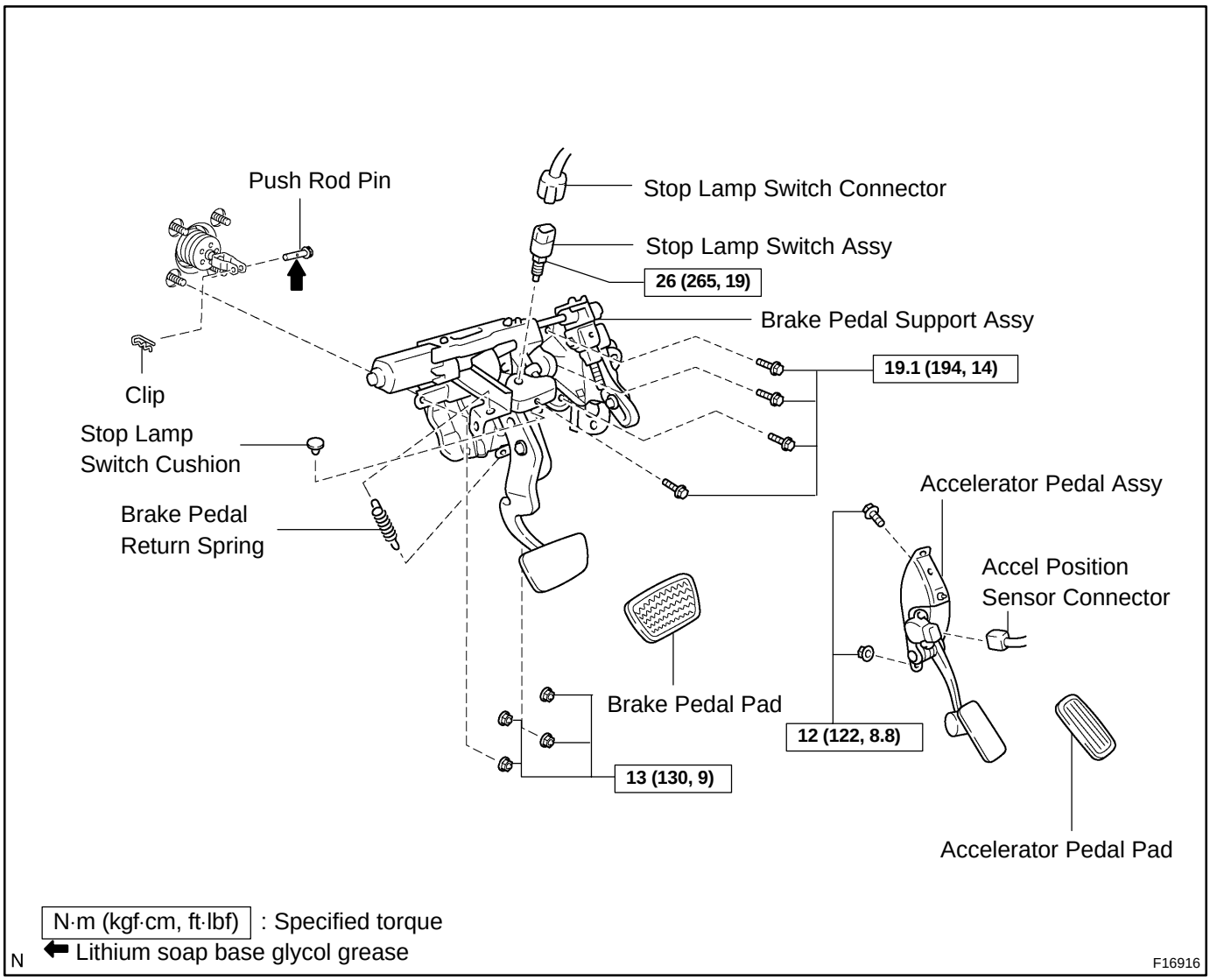
Push Rod Pin
Stop Lamp Switch Connector
Stop Lamp Switch Assy
26 (265, 19)
Brake Pedal Support Assy
19.1 (194, 14)
Clip
Stop Lamp
Switch Cushion
Brake Pedal
Return Spring
Accelerator Pedal Assy
Accel Position
Sensor Connector
Brake Pedal Pad
12 (122, 8.8)
13 (130, 9)
Accelerator Pedal Pad
N·m (kgf·cm, ft·lbf) : Specified torque
Lithium soap base glycol grease
N
F16916

320N1−07

OVERHAUL

1. PRECAUTION (See page 60−1)
2. DISCONNECT BATTERY NEGATIVE TERMINAL
3. REMOVE STEERING WHEEL COVER LOWER NO.2
4. REMOVE STEERING WHEEL COVER LOWER NO.2 (W/O STEERING PAD SWITCH 4 SPOKE STEERING WHEEL)
5. REMOVE POWER WINDOW LOCK SWITCH BULB (W/ STEERING PAD SWITCH 4 SPOKE STEERING WHEEL)
   (See page 50−6)
6. REMOVE STEERING WHEEL COVER LOWER NO.3 (3 SPOKE STEERING WHEEL ASSY)
   (See page 50−6)
7. INSPECT PLACE FRONT WHEELS FACING STRAIGHT AHEAD
8. REMOVE HORN BUTTON ASSY (See page 60−25)
9. REMOVE STEERING WHEEL ASSY (See page 50−9)
   SST 09950−50013 (09951−05010, 09952−05010, 09953−05020, 09954−05021)
10. REMOVE INSTRUMENT CLUSTER FINISH PANEL (See page 71−16)
11. REMOVE STEERING COLUMN COVER (See page 50−9)
12. DISCONNECT FLOOR SHIFT PARKING LOCK CABLE ASSY (See page 50−9)
13. REMOVE FRONT DOOR SCUFF PLATE LH (See page 71−16)
14. REMOVE COWL SIDE TRIM SUB−ASSY LH (See page 71−16)
15. REMOVE INSTRUMENT PANEL COIN BOX SUB−ASSY (See page 71−16)
16. REMOVE INSTRUMENT PANEL SUB−ASSY UPPER (See page 71−16)
17. REMOVE INSTRUMENT PNL INSERT SUB−ASSY LWR LH (See page 71−16)
18. REMOVE DUCT, FR VENTILATOR, LH (See page 71−16)
19. DISCONNECT STEERING INTERMEDIATE SHAFT SUB−ASSY (See page 50−9)
20. REMOVE STEERING COLUMN ASSY (See page 50−9)

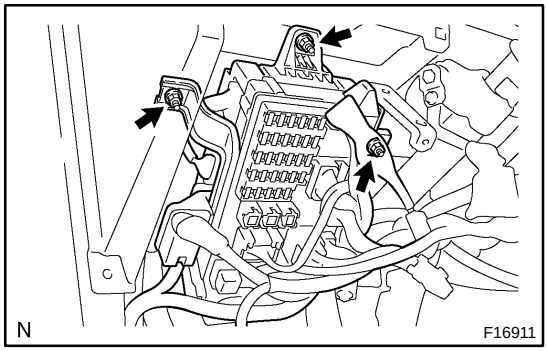

21. REMOVE INSTRUMENT PANEL JUNCTION BLOCK ASSY
(a) Remove the 3 nuts and junction block assy, then disconnect the connector.

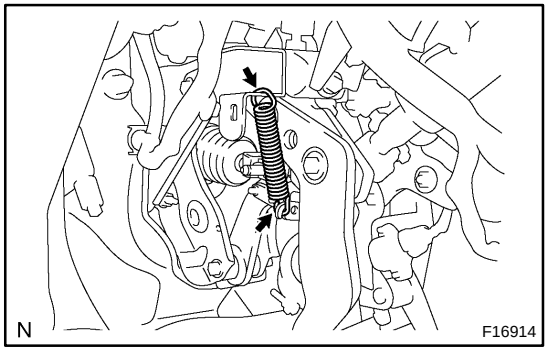

22. REMOVE BRAKE PEDAL RETURN SPRING

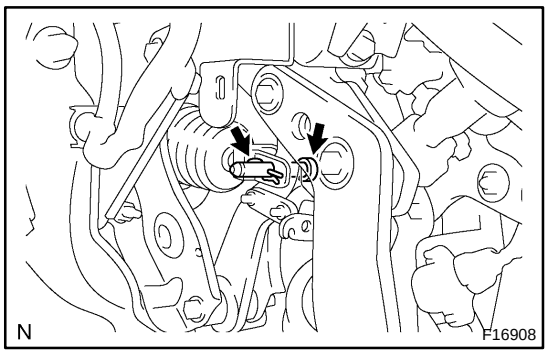

23. REMOVE PUSH ROD PIN

(a) Remove the clip and push rod pin.

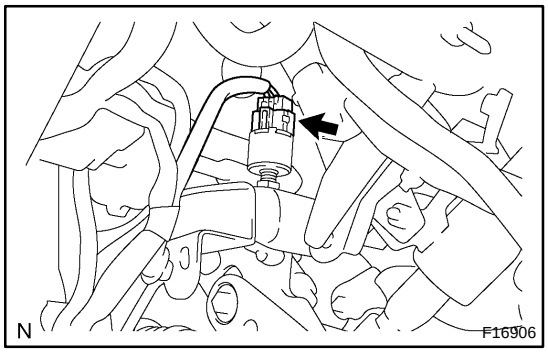

24. REMOVE ACCELERATOR & BRAKE PEDAL ASSY

(a) Disconnect the stop lamp switch connector.

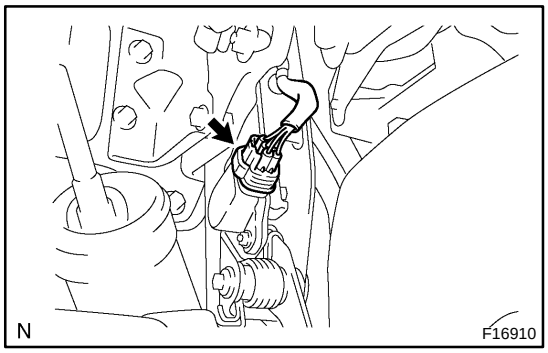

(b) Disconnect the accel position sensor connector.

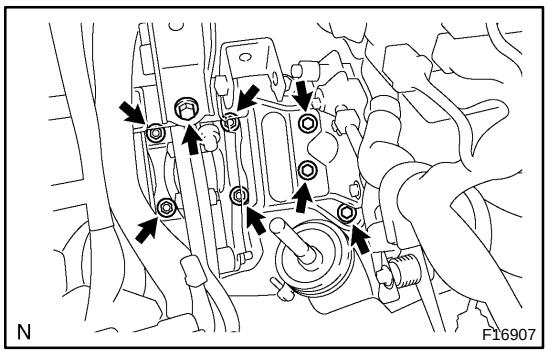

(c) Remove the 4 bolts, 4 nuts and accelerator & brake pedal assy.

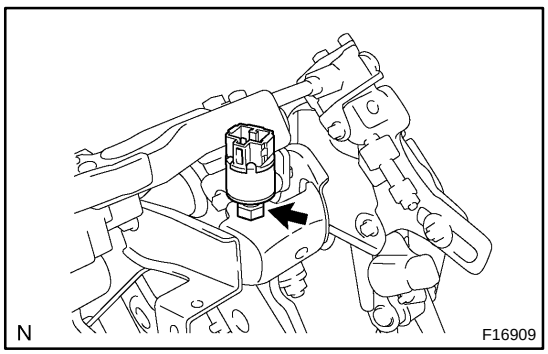

25. REMOVE STOP LAMP SWITCH ASSY

(a) Loosen the nut and remove the stop lamp switch assy.

26. REMOVE BRAKE PEDAL PAD

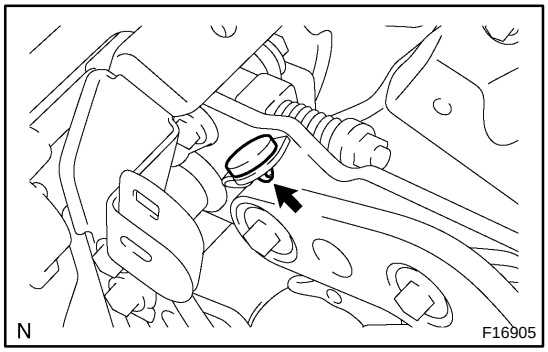

27. REMOVE STOP LAMP SWITCH CUSHION

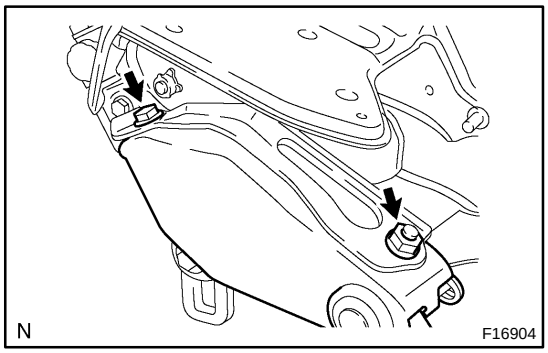

28. REMOVE ACCELERATOR PEDAL ASSY

(a) Remove the bolt, nut and accelerator pedal assy.

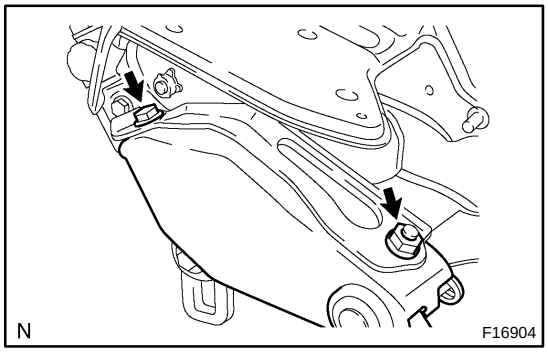

29. INSTALL ACCELERATOR PEDAL ASSY

(a) Install the accelerator pedal assy with nut and bolt.
Torque: 12 N·m (122 kgf·cm, 8.8 ft·lbf)

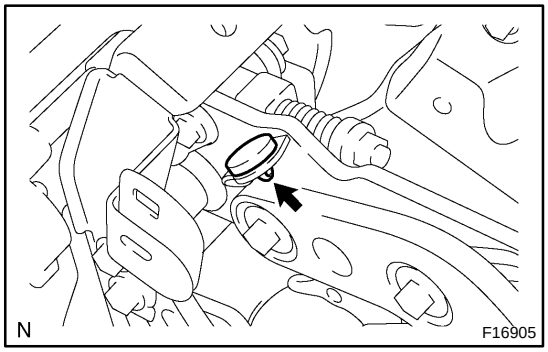

30. INSTALL STOP LAMP SWITCH CUSHION

31. INSTALL BRAKE PEDAL PAD

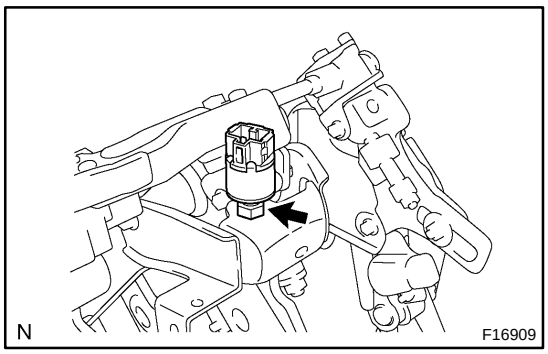

32. INSTALL STOP LAMP SWITCH ASSY

(a) Install the stop lamp switch assy with a nut.
Torque: 26 N·m (265 kgf·cm, 19 ft·lbf)

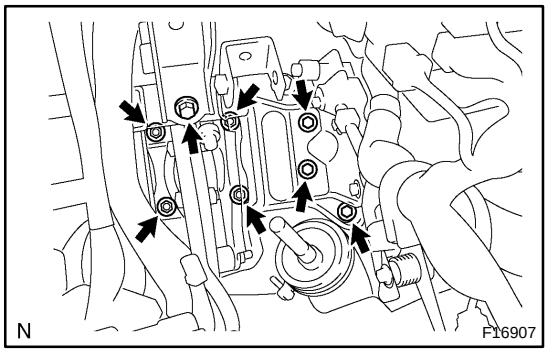

33. INSTALL ACCELERATOR & BRAKE PEDAL ASSY

(a) Install the accelerator & brake pedal assy with the 4 nuts and 4 bolts.
Torque:
Nut: 13 N·m (130 kgf·cm, 9 ft·lbf)
Bolt: 19.1 N·m (194 kgf·cm, 14 ft·lbf)

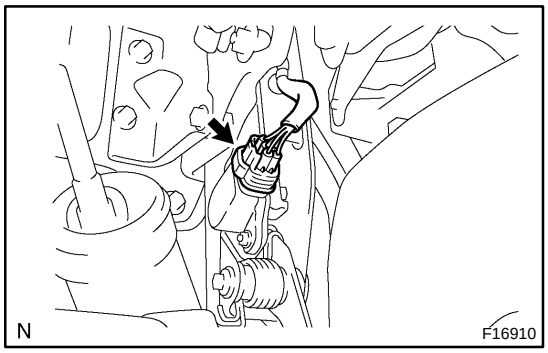

(b) Connect the accel position sensor connector.

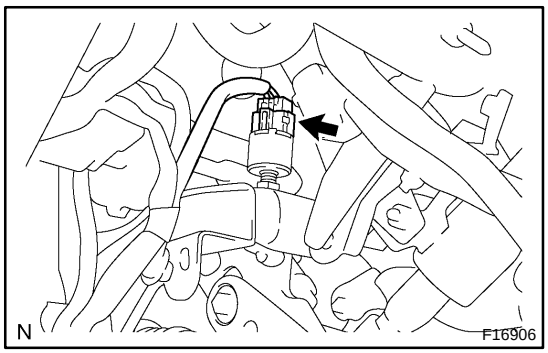

(c) Connect the stop lamp switch connector.

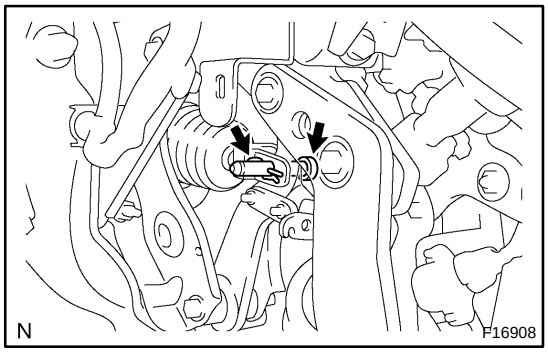

34. INSTALL PUSH ROD PIN

(a) Install the push rod pin and clip.

HINT:

Apply the lithium soap base glycol grease to the parts indicates by arrows (See page 32−16).

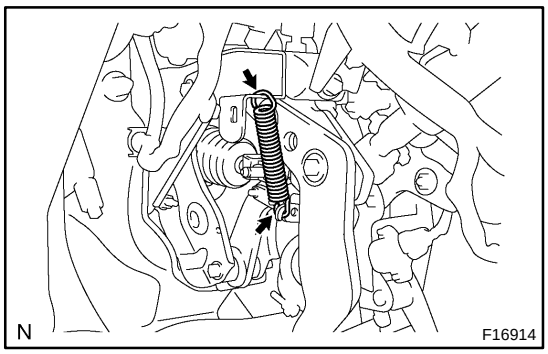

35. INSTALL BRAKE PEDAL RETURN SPRING

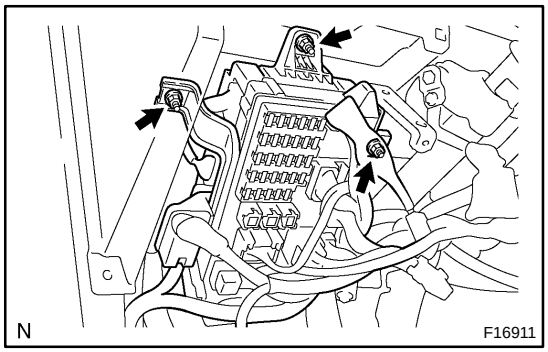

36. INSTALL INSTRUMENT PANEL JUNCTION BLOCK ASSY

(a) Install the junction block assy with the 3 nuts, then connect the each connector.

37. INSTALL STEERING COLUMN ASSY (See page 50−9)
38. CONNECT STEERING INTERMEDIATE SHAFT SUB−ASSY (See page 50−9)
39. PLACE FRONT WHEELS FACING STRAIGHT AHEAD
40. CONNECT FLOOR SHIFT PARKING LOCK CABLE ASSY (See page 50−9)
41. CHECK KEY INTERLOCK OPERATION
42. INSTALL STEERING COLUMN COVER (See page 50−9)
43. INSTALL INSTRUMENT CLUSTER FINISH PANEL (See page 71−16)
44. INSTALL DUCT, FR VENTILATOR, LH (See page 71−16)
45. INSTALL INSTRUMENT PNL INSERT SUB−ASSY LWR LH (See page 71−16)
46. INSTALL INSTRUMENT PANEL SUB−ASSY UPPER (See page 71−16)
47. INSTALL INSTRUMENT PANEL COIN BOX SUB−ASSY (See page 71−16)
48. INSTALL COWL SIDE TRIM SUB−ASSY LH (See page 71−16)
49. INSTALL FRONT DOOR SCUFF PLATE LH (See page 71−16)
50. CENTER SPIRAL CABLE (See page 60−34)
51. INSTALL STEERING WHEEL ASSY (See page 50−9)
52. INSPECT HORN BUTTON ASSY (See page 60−25)
53. INSTALL HORN BUTTON ASSY (See page 60−25)
54. INSTALL STEERING WHEEL COVER LOWER NO.2
55. INSTALL STEERING WHEEL COVER LOWER NO.3 (W/O STEERING PAD SWITCH 4 SPOKE STEERING WHEEL)
56. INSTALL POWER WINDOW LOCK SWITCH BULB (W/ STEERING PAD SWITCH 4 SPOKE STEERING WHEEL)
57. INSTALL STEERING WHEEL COVER LOWER NO.3 (3 SPOKE STEERING WHEEL ASSY)
58. INSPECT STEERING WHEEL CENTER POINT
59. INSPECT SRS WARNING LIGHT (See page 05−1464)

BRAKE MASTER CYLINDER SUB−ASSY

321BY−02

OVERHAUL

1. DRAIN BRAKE FLUID

NOTICE:

Wash off the brake fluid immediately if it comes into contact with a painted surface.

2. REMOVE AIR CLEANER ASSY

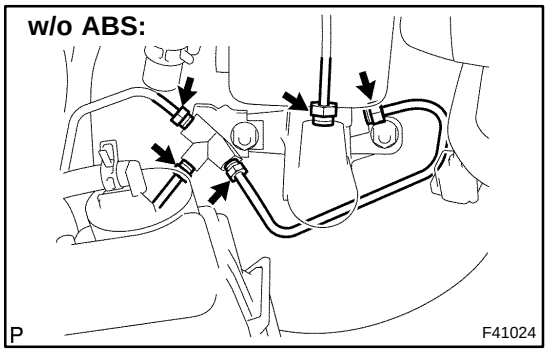

3. REMOVE BRAKE MASTER CYLINDER SUB−ASSY

(a) Disconnect the level warning switch connector.

(b) w/o ABS:
Using SST, disconnect the 5 brake tubes from the brake master cylinder.
SST 09023−00101

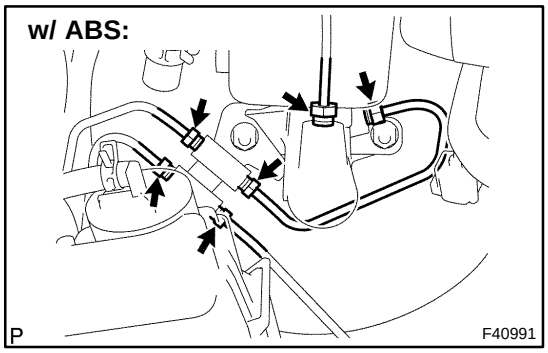

(c) w/ ABS:
Using SST, disconnect the 6 brake tubes from the brake master cylinder.
SST 09023−00101

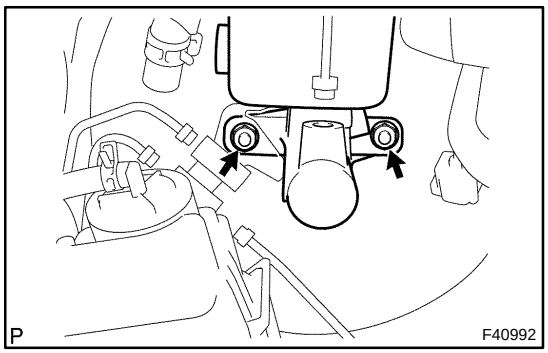

(d) w/o ABS:
Remove the 2 nuts, pull out the 3−way and brake master cylinder sub−assy.

(e) w/ ABS:
Remove the 2 nuts, pull out the 2−way and brake master cylinder sub−assy.

4. REMOVE BRAKE MASTER CYLINDER RESERVOIR FILLER CAP ASSY

(a) Pull out the master cylinder reservoir filler cap assy.

5. REMOVE BRAKE MASTER CYLINDER RESERVOIR STRAINER

(a) Pull out the master cylinder reservoir strainer.

6. REMOVE BRAKE MASTER CYLINDER RESERVOIR SUB−ASSY

(a) Remove the screw and pull out the master cylinder reservoir sub−assy.

7. REMOVE MASTER CYLINDER RESERVOIR GROMMET

(a) Remove the 2 master cylinder reservoir grommets.

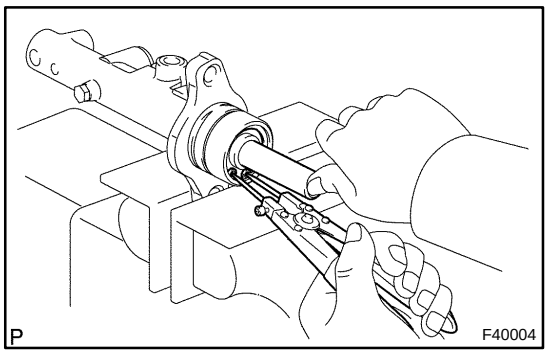

8. REMOVE BRAKE MASTER CYLINDER KIT (W/O VSC)

(a) Place master cylinder in vise.

(b) Remove the O−ring.

(c) Push in the piston and remove the snap ring with snap ring pliers.

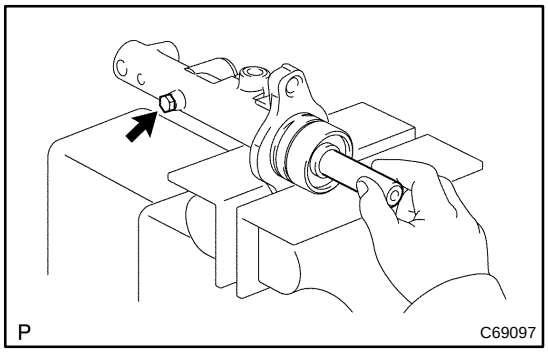

(d) Push in the piston and remove the piston stopper bolt and gasket.

(e) Remove the No.1 piston sub−assy, pulling straight out not at an angle.

NOTICE:

If pulled out at an angle, there is a possibility that the cylinder bore could be damaged.

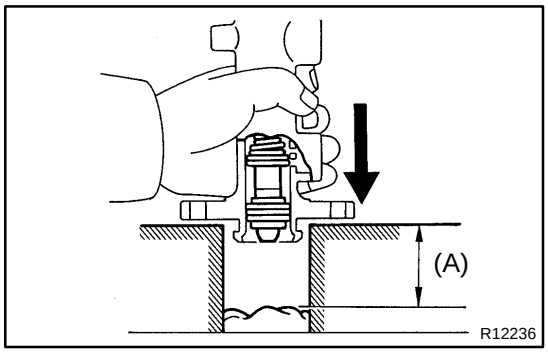

(f) Place a waste cloth and 2 wooden blocks on the work table and lightly edges until the No.2 piston sub−assy drops out of the cylinder.

HINT:

Make sure the distance (A) from the rag the top of the blocks is at least 100 mm (3.94 in.).

NOTICE:

If pulled out at an angle, there is a possibility that the cylinder bore could be damaged.

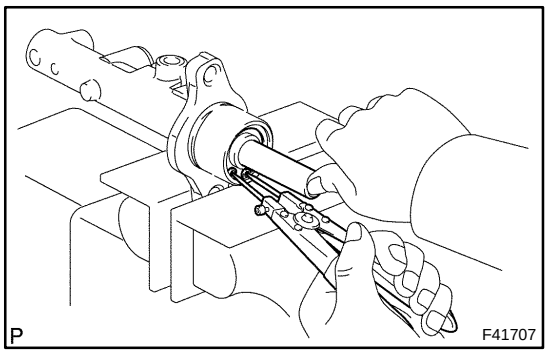

9. REMOVE BRAKE MASTER CYLINDER KIT (W/ VSC)

(a) Place master cylinder in vise.

(b) Remove the O−ring.

(c) Push in the piston and remove the snap ring with snap ring pliers.

NOTICE:

If pulled out at an angle, there is a possibility that the cylinder bore could be damaged.

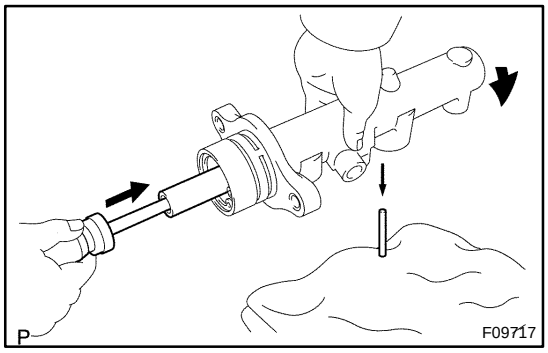

(d) Push in the piston with a screwdriver, and remove the straight pin by turning over the cylinder body.

HINT:

Tape the screwdriver tip before use.

(e) Remove the No.1 and No.2 piston sub−assy and 2 springs by hand, pulling straight out, not at an angle.

10. INSPECT MASTER CYLINDER BODY

(a) Check the cylinder bore for rust or scoring.

11. INSTALL BRAKE MASTER CYLINDER KIT (W/O VSC)

(a) Place master cylinder in vise.

(b) Apply the lithium soap base grycol grease on new No.1 and No.2 piston sub−assy.

(c) Install the No.2 and No.1 piston sub−assy.

NOTICE:

- **If the piston is inserted at an angle, there is a possibility that the cylinder bore could be damaged.**
- **Be careful not to damage the rubber lips on the pistons.**

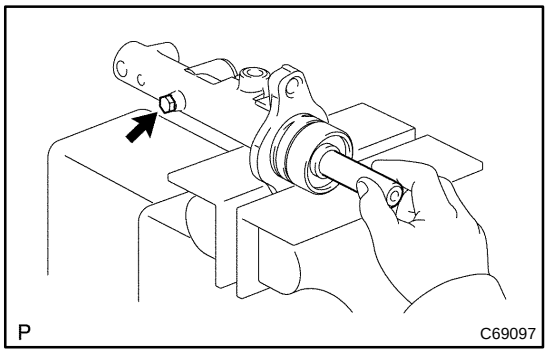

(d) Push in the piston and install a new gasket and a new piston stopper bolt.
Torque: 10 N·m (100 kgf·cm, 7 ft·lbf)

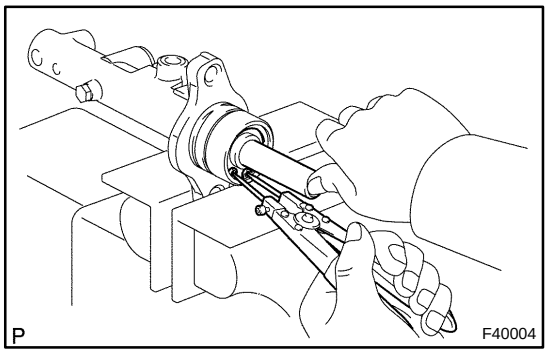

(e) Push in the piston and install the snap ring with snap ring pliers.

(f) Apply the lithium soap base grycol grease on a new O−ring and install the O−ring to the master cylinder.

12. INSTALL BRAKE MASTER CYLINDER KIT (W/ VSC)

(a) Place master cylinder in vise.

(b) Apply the lithium soap base glycol grease on new No.1 and No.2 piston sub−assy.

(c) Install the No.2 and No.1 piston sub−assy.

NOTICE:

- **If the piston is inserted at an angle, there is a possibility that the cylinder bore could be damaged.**
- **Be careful not to damage the rubber lips on the pistons.**

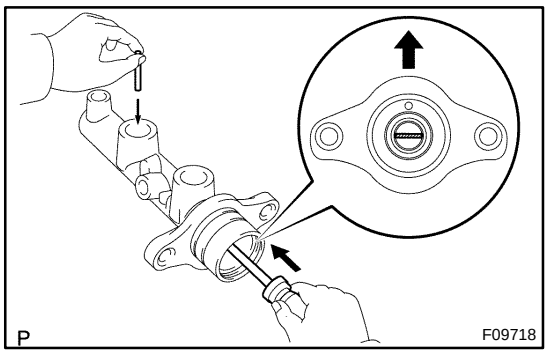

(d) Install the straight pin.

HINT:

Insert the No.2 piston with the groove positioning horizontally.

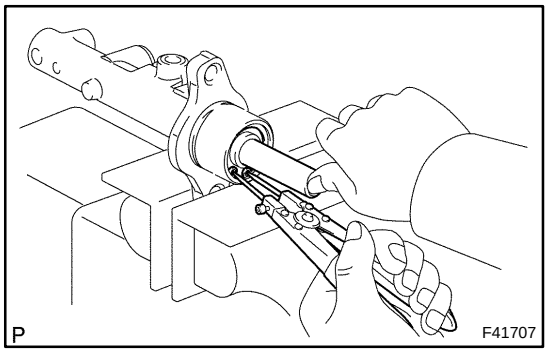

(e) Push in the piston and install the snap ring with snap ring pliers.

(f) Apply the lithium soap base glycol grease on a new O−ring and install the O−ring to the master cylinder.

13. INSTALL MASTER CYLINDER RESERVOIR GROMMET

(a) Apply the lithium soap base glycol grease on the 2 master cylinder reservoir grommets.

(b) Install the 2 master cylinder reservoir grommets to the master cylinder reservoir sub−assy.

14. INSTALL BRAKE MASTER CYLINDER RESERVOIR SUB−ASSY

(a) Install the master cylinder reservoir sub−assy to the master cylinder with the screw.

15. INSTALL BRAKE MASTER CYLINDER RESERVOIR STRAINER

(a) Install the brake master cylinder reservoir strainer.

16. INSTALL BRAKE MASTER CYLINDER RESERVOIR FILLER CAP ASSY

(a) Install the brake master cylinder reservoir filler cap assy.

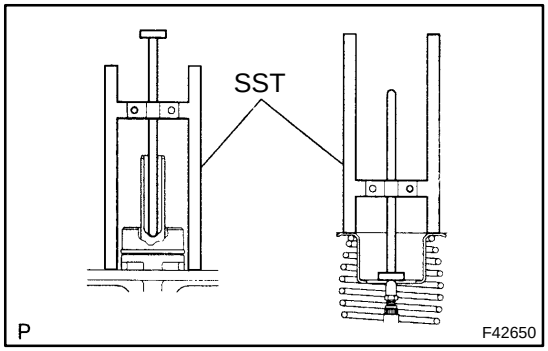

17. INSPECT AND ADJUST BRAKE BOOSTER PUSH ROD

(a) Apply SST to the master cylinder.
SST 09737−00013

(b) Set SST, on the master cylinder, lower the pin of the SST until it slightly touches the piston.

(c) Apply the chalk to the flat surfaced tip of the SST pin.

(d) Turn SST upside down and place it clearance between the brake booster and SST.
Clearance: 0 mm (0 in.)

HINT:

- If there is a clearance between the SST main body and the booster shell. It means that the specified value, and no chalk attachment on the booster push rod means that it is more than the specified value.
- Brake booster push rod clearance before shipment is adjusted to be ± 0.105 mm (± 0.004 in.).

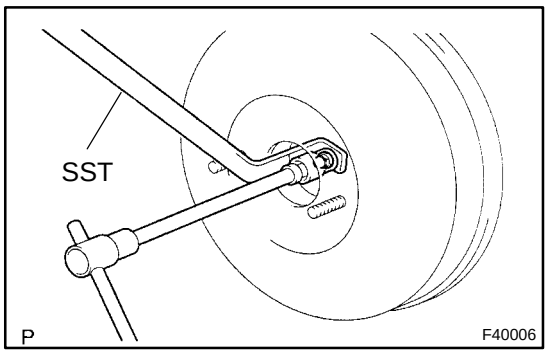

(e) Using SST, adjust the booster push rod length until the push rod lightly touches the pin head.
SST 09737−00020

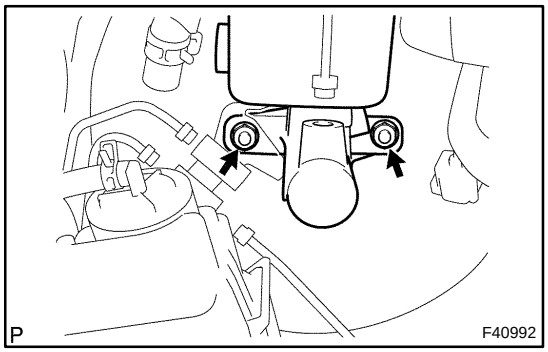

18. INSTALL BRAKE MASTER CYLINDER SUB−ASSY

(a) w/o ABS:
Install the master cylinder sub−assy and 3−way with the 2 nuts.
Torque: 13 N·m (130 kgf·cm, 9 ft·lbf)

(b) w/ ABS:
Install the master cylinder sub−assy and 2−way with the 2 nuts.
Torque: 13 N·m (130 kgf·cm, 9 ft·lbf)

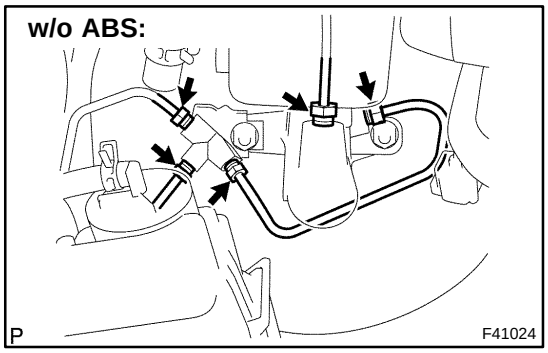

(c) w/o ABS:
Using SST and connect the 5 brake tubes to the master cylinder sub−assy.
SST 09023−00101
Torque: 15 N·m (155 kgf·cm, 11 ft·lbf)

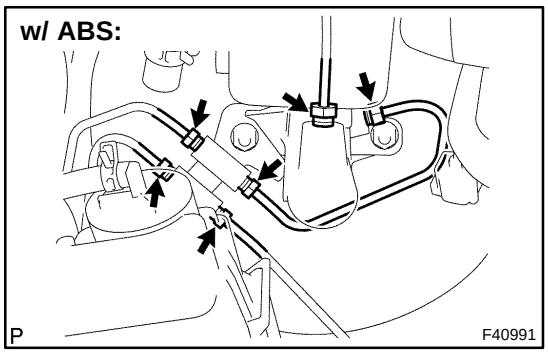

(d) w/ ABS:
Using SST and connect the 6 brake tubes to the master cylinder sub−assy.
SST 09023−00101
Torque: 15 N·m (155 kgf·cm, 11 ft·lbf)

(e) Connect the level warning switch connector.

19. FILL RESERVOIR WITH BRAKE FLUID
20. BLEED MASTER CYLINDER (See page 32−4)
SST 09023−00101
21. BLEED BRAKE LINE (See page 32−4)
22. INSTALL AIR CLEANER ASSY
23. CHECK FLUID LEVEL IN RESERVOIR (See page 32−4)
24. CHECK BRAKE FLUID LEAKAGE

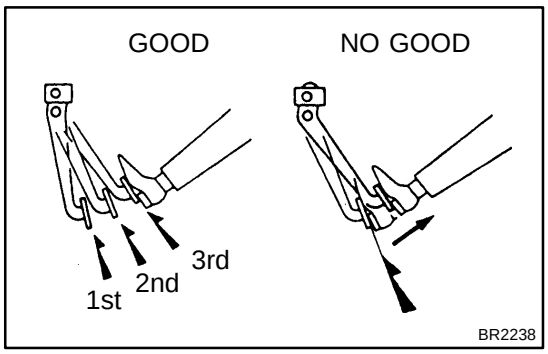

BRAKE BOOSTER ASSY

320CU−06

ON−VEHICLE INSPECTION

1. INSPECT BRAKE BOOSTER

(a) Air tightness check.

(1) Start the engine and stop it after 1 or 2 minutes. Depress the brake pedal several times slowly.

HINT:

If the pedal goes down farthest the 1st time, but gradually rises after the 2nd or 3rd time, the booster is air tight.

(2) Depress the brake pedal while the engine is running, and stop the engine with the pedal depressed.

HINT:

If there is no change in the pedal reserve distance after holding the pedal for 30 seconds, the booster is air−tight.

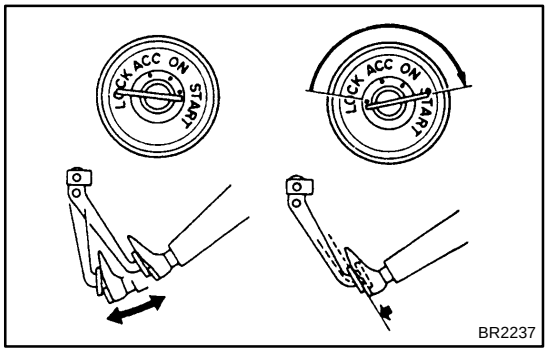

(b) Operating check.

(1) Depress the brake pedal several times with the ignition switch OFF and check that there is no change in the pedal reserve distance.

(2) Depress the brake pedal and start the engine.

HINT:

If the pedal goes down slightly, operation is normal.

2. INSPECT VACUUM CHECK VALVE

(a) Check vacuum check valve.

(1) Slide the clip and disconnect the vacuum hose.

(2) Remove the vacuum check valve.

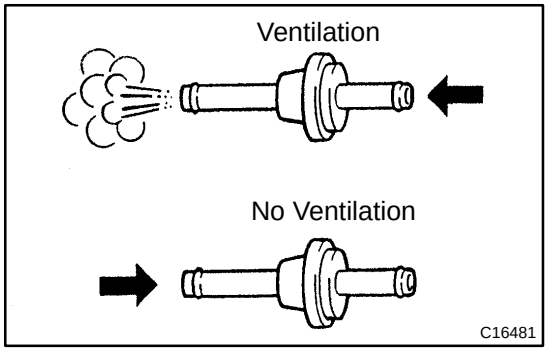

(3) Check that there is ventilation from the booster to engine, and no ventilation from the engine to the booster.

(4) If any fault is found, replace the vacuum check valve.

320CV−06

COMPONENTS

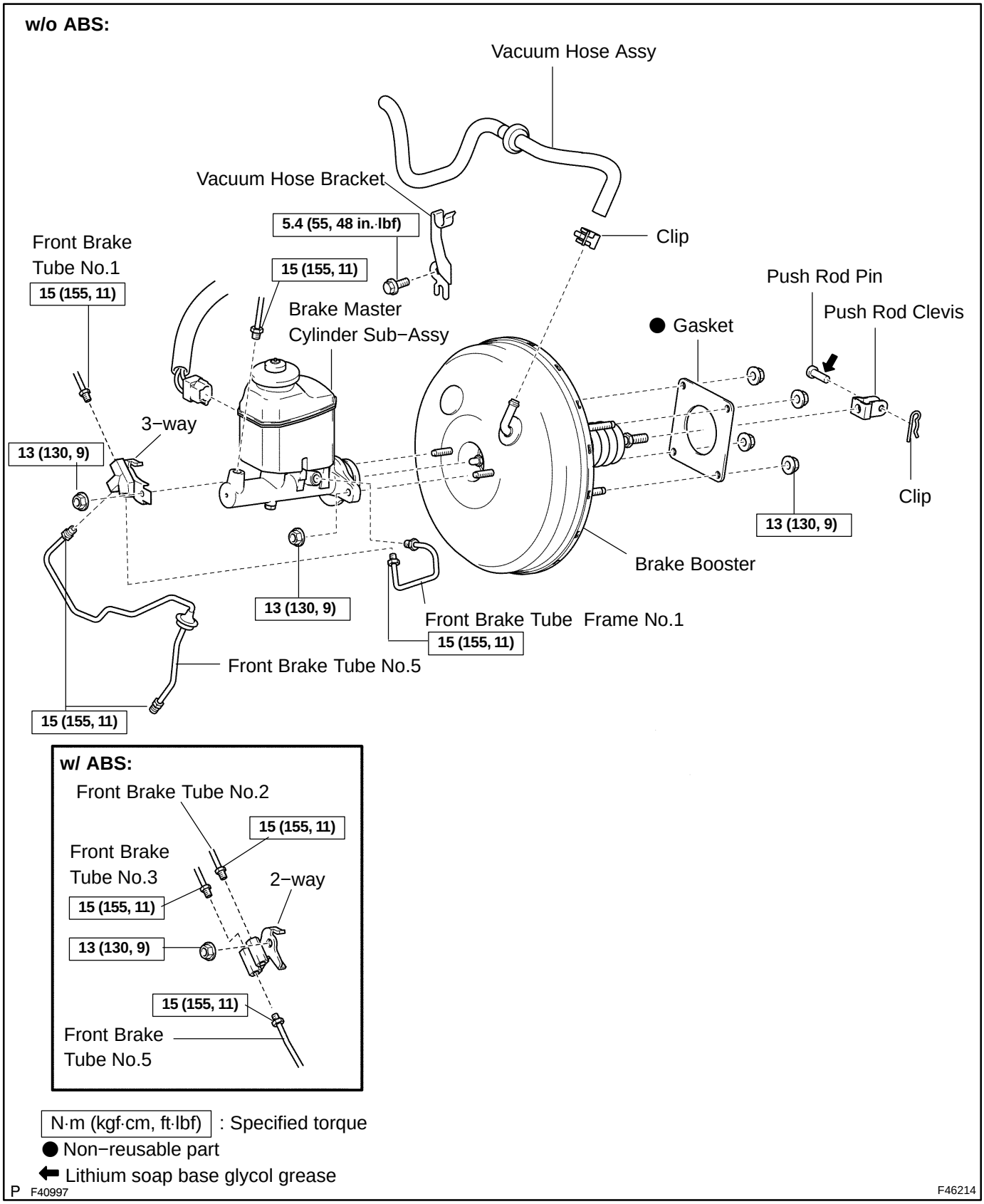

3211T−05

REPLACEMENT

HINT:

COMPONENTS: See page 32−29

1. DRAIN BRAKE FLUID

NOTICE:

Wash off the brake fluid immediately if it comes into contact with a painted surface.

2. REMOVE AIR CLEANER ASSY

3. REMOVE BRAKE MASTER CYLINDER SUB−ASSY (See page 32−23)

SST 09023−00101

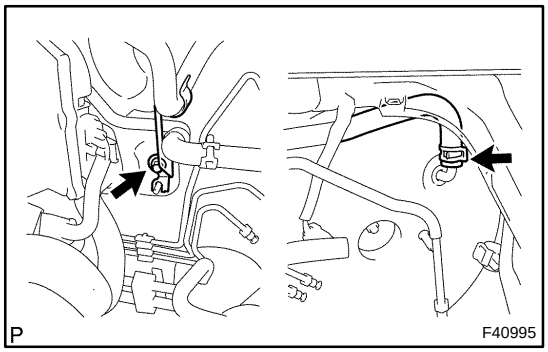

4. DISCONNECT VACUUM HOSE ASSY

(a) Remove the bolt and separate the vacuum hose from the vacuum hose bracket.

(b) Slide the clip and disconnect the vacuum hose from the brake booster.

5. REMOVE FRONT DOOR SCUFF PLATE LH (See page 71−16)

6. REMOVE COWL SIDE TRIM SUB−ASSY LH (See page 71−16)

7. REMOVE INSTRUMENT PANEL SUB−ASSY UPPER (See page 71−16)

8. REMOVE PUSH ROD PIN

(a) Remove the clip and push rod pin.

9. REMOVE BRAKE MASTER CYLINDER PUSH ROD CLEVIS

(a) Loosen the lock nut and remove the push rod clevis.

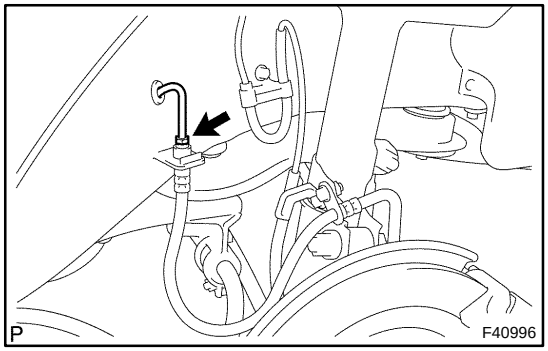

10. REMOVE FRONT BRAKE TUBE NO.5

(a) Using SST and remove the front brake tube No.5.

SST 09023−00101

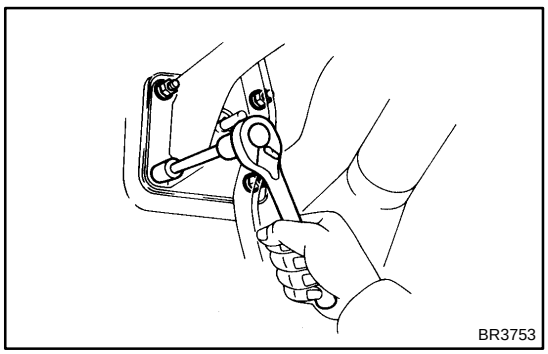

11. REMOVE BRAKE BOOSTER ASSY

(a) Remove the 4 nuts.

(b) Pull out the brake booster assy.

12. REMOVE BRAKE BOOSTER GASKET

13. INSTALL BRAKE BOOSTER GASKET

(a) Install a new brake booster gasket to the brake booster.

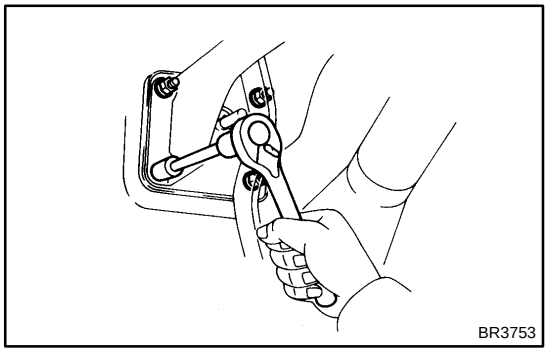

14. INSTALL BRAKE BOOSTER ASSY

(a) Install the brake booster with the 4 nuts.
Torque: 13 N·m (130 kgf·cm, 9 ft·lbf)

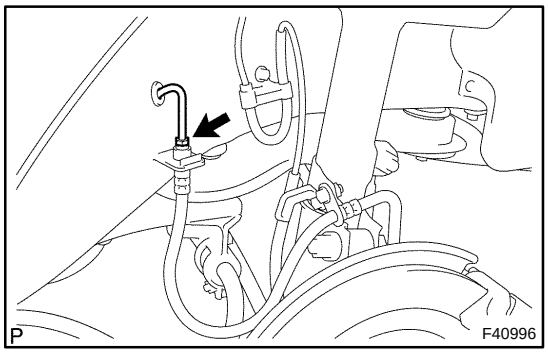

15. INSTALL FRONT BRAKE TUBE NO.5

(a) Using SST and install the front brake tube No.5.
Torque: 15 N·m (155 kgf·cm, 11 ft·lbf)
SST 09023−00101

16. INSTALL BRAKE MASTER CYLINDER PUSH ROD CLEVIS

(a) Install the push rod clevis and lock nut.

17. INSTALL PUSH ROD PIN

(a) Install the push rod pin and clip.

HINT:

Apply the lithium soap base glycol grease to the part indicate by arrow (See page 32−29).

18. INSTALL INSTRUMENT PANEL SUB−ASSY UPPER (See page 71−16)

19. INSTALL COWL SIDE TRIM SUB−ASSY LH (See page 71−16)

20. INSTALL FRONT DOOR SCUFF PLATE LH (See page 71−16)

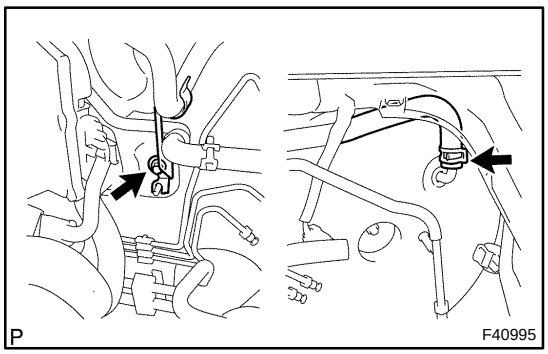

21. INSTALL VACUUM HOSE ASSY

(a) Install the vacuum hose and vacuum hose bracket to the body with a bolt.
Torque: 5.4 N·m (55 kgf·cm, 48 in.·lbf)

(b) Connect the vacuum hose to the brake booster with the clip.

22. INSPECT AND ADJUST BRAKE BOOSTER PUSH ROD
SST 09737−00013, 09737−00020

23. INSTALL BRAKE MASTER CYLINDER SUB−ASSY (See page 32−23)
SST 09023−00101

24. INSTALL AIR CLEANER ASSY

25. FILL RESERVOIR WITH BRAKE FLUID

26. BLEED MASTER CYLINDER (See page 32−4)

SST 09023−00101

27. BLEED BRAKE LINE (See page 32−4)

28. CHECK FLUID LEVEL IN RESERVOIR

29. CHECK BRAKE FLUID LEAKAGE

30. CHECK AND ADJUST BRAKE PEDAL HEIGHT (See page 32−8 or 32−14)

FRONT BRAKE

COMPONENTS

321BZ−01

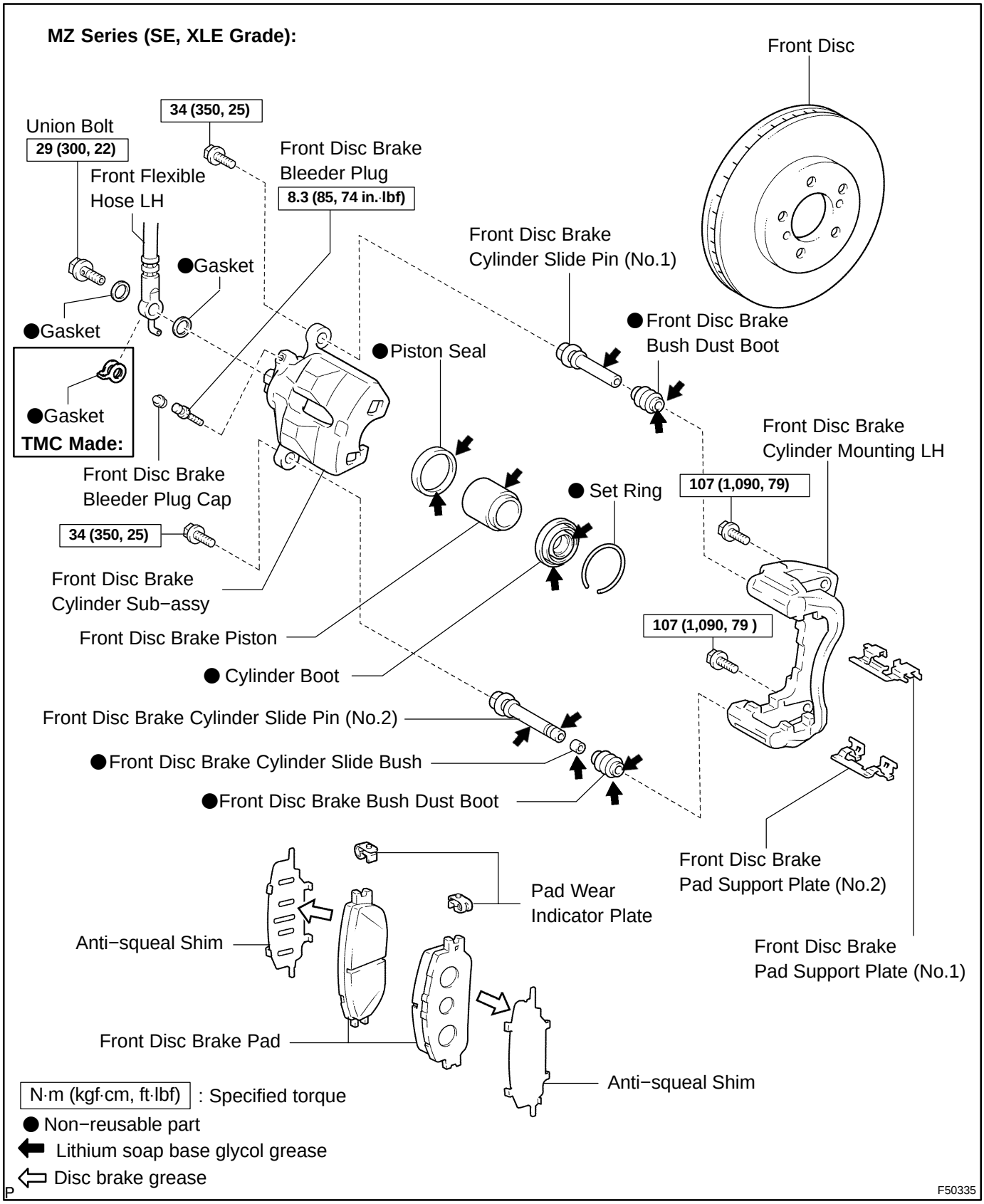

Except MZ Series (SE, XLE Grade):

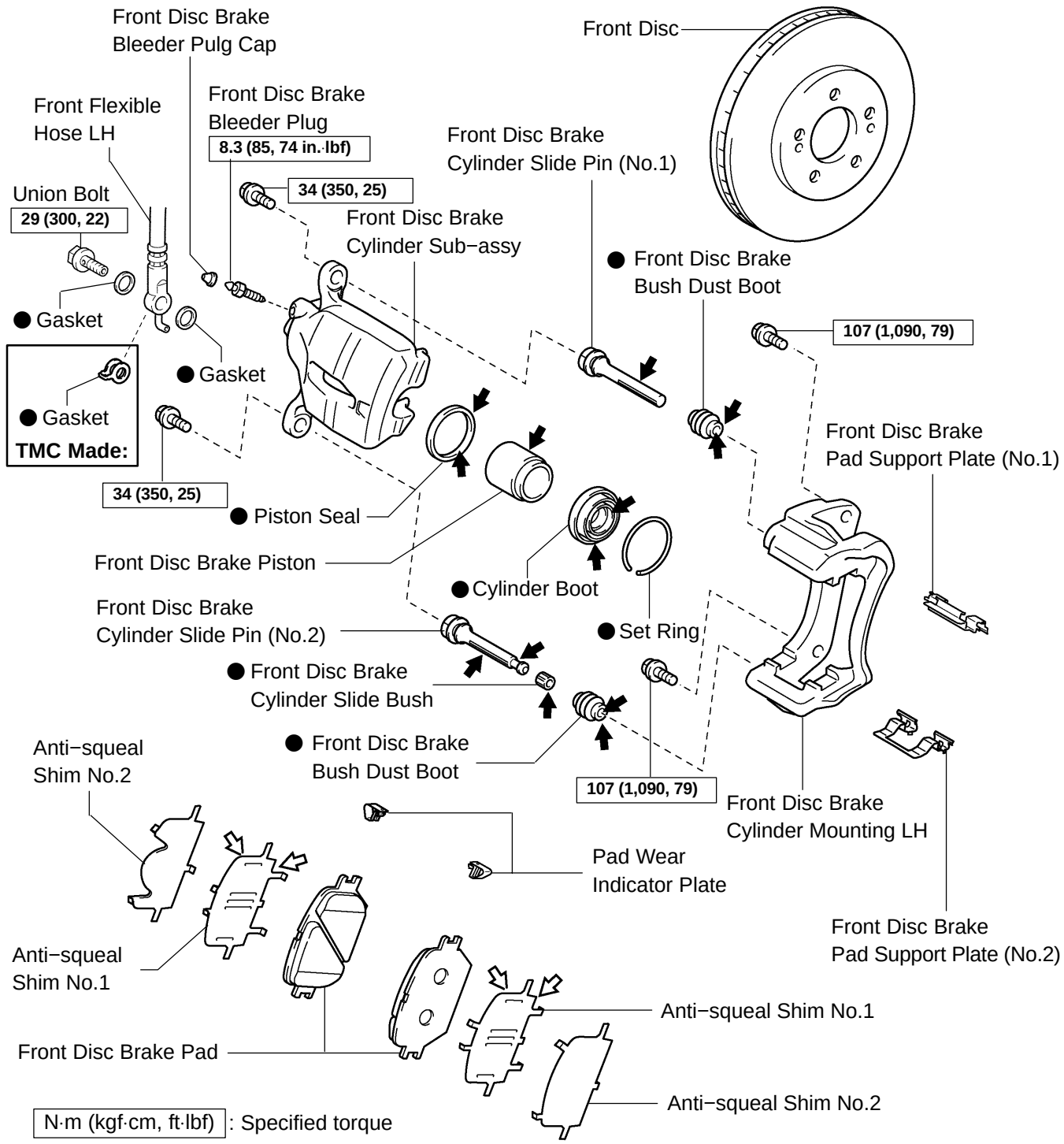

N·m (kgf·cm, ft·lbf) : Specified torque
● Non−reusable part
⬅ Lithium soap base glycol grease
T ⇦ Disc brake grease

F50749

321C0−03

OVERHAUL

HINT:

- Use the same procedures for the RH side and LH side.
- The procedures listed below are for the LH side.

1. REMOVE FRONT WHEEL

2. DRAIN BRAKE FLUID

NOTICE:

Wash brake fluid off immediately if it adheres to any painted surface.

3. DISCONNECT FRONT FLEXIBLE HOSE

(a) Remove the union bolt and the gasket(s) from the disc brake cylinder sub−assy, then disconnect the flexible hose.

HINT:

Gasket has 2 types: 2−piece type and 1−piece type.

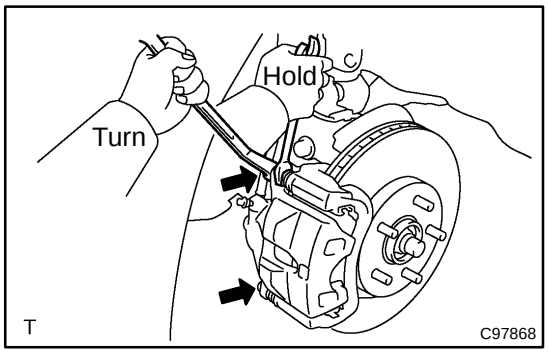

4. REMOVE FRONT DISC BRAKE CYLINDER SUB−ASSY

(a) Hold the front disc brake cylinder slide pin (No.1) and slide pin (No.2), and remove the 2 bolts.

5. REMOVE DISC BRAKE PAD KIT FRONT (PAD ONLY)

(a) Remove the 2 disc brake pads with anti−squeal shims from the front disc brake cylinder mounting LH.

6. REMOVE ANTI SQUEAL SHIM KIT FRONT

(a) MZ Series (SE, XLE Grade):
Remove the 2 anti−squeal shims from each pad.

(b) Except MZ Series (SE, XLE Grade):
Remove the 4 anti−squeal shims from each pad.

(c) Using a screwdriver, remove the pad wear indicator plates from each pad.

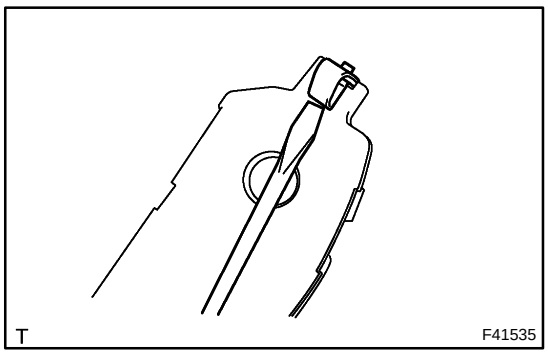

7. REMOVE FRONT DISC BRAKE PAD SUPPORT PLATE

(a) Remove the front disc brake pad support plate (No.1) and front disc brake pad support plate (No.2) from the front disc brake cylinder mounting LH.

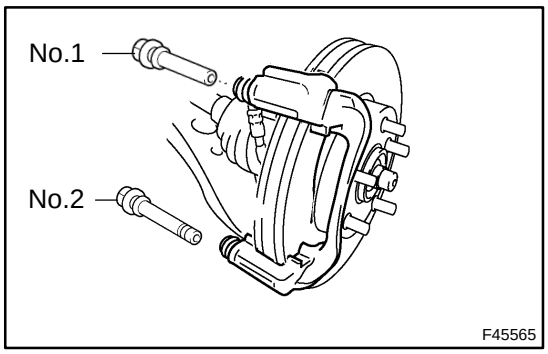

8. REMOVE FRONT DISC BRAKE CYLINDER SLIDE PIN

(a) Remove the front disc brake cylinder slide pin (No.1) and front disc brake cylinder slide pin (No.2) from the front disc brake cylinder mounting LH.

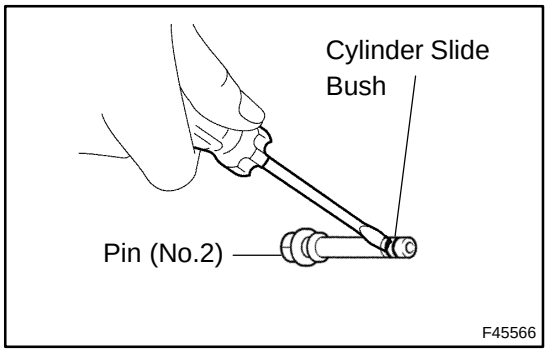

9. REMOVE FRONT DISC BRAKE CYLINDER SLIDE BUSH

(a) Using a screwdriver, remove the front disc brake cylinder slide bush from the front disc brake cylinder slide pin (No.2).

NOTICE:

Do not damage the front disc brake cylinder slide pin (No.2).

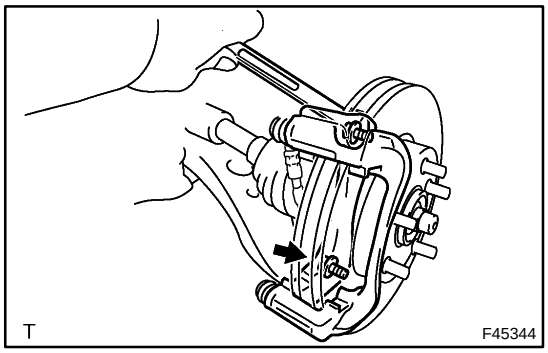

10. REMOVE FRONT DISC BRAKE CYLINDER MOUNTING

(a) Remove the 2 bolts and front disc brake cylinder mounting LH.

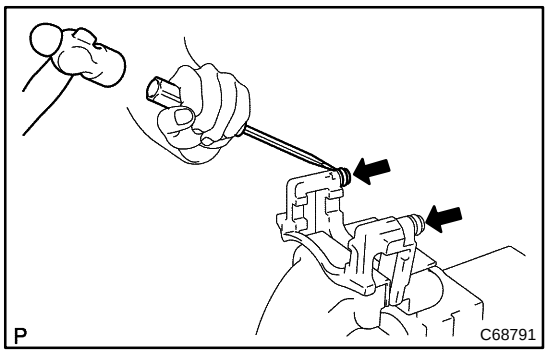

11. REMOVE FRONT DISC BRAKE BUSH DUST BOOT

(a) Hold the front disc brake cylinder mounting LH in the vise through the soft jaws.

(b) Using a screwdriver and a hammer, remove the 2 front disc brake bush dust boots from the front disc brake cylinder mounting LH.

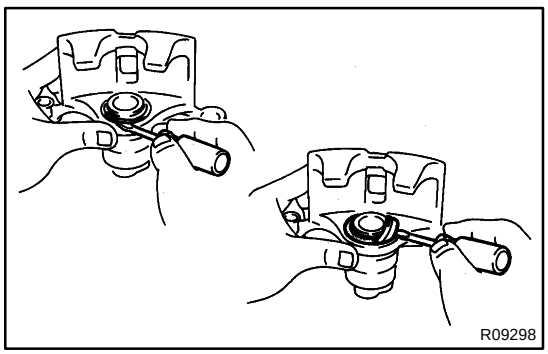

12. REMOVE CYLINDER BOOT

(a) Using a screwdriver, remove the set ring and cylinder boot.

NOTICE:

Do not damage the piston groove and cylinder groove.

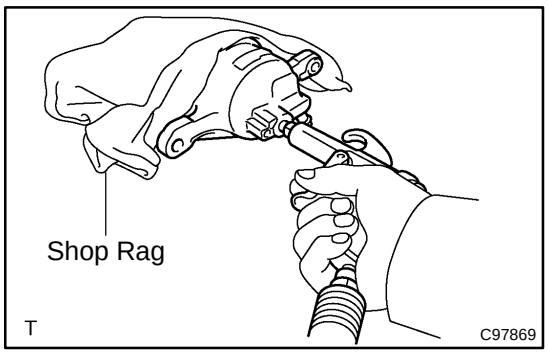

13. REMOVE FRONT DISC BRAKE PISTON

(a) Place a shop rag between the front disc brake piston and the disc brake cylinder sub−assy.

(b) Use compressed air to remove the front disc brake piston from the disc brake cylinder sub−assy.

CAUTION:

Do not place your fingers in front of the piston when using compressed air.

NOTICE:

Do not spatter the brake fluid.

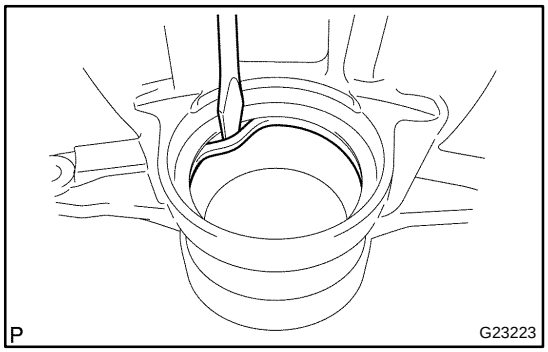

14. REMOVE PISTON SEAL

(a) Using a screwdriver, remove the piston seal from the front disc brake cylinder sub−assy.

NOTICE:

Do not damage the inner cylinder and cylinder groove.

15. REMOVE FRONT DISC BRAKE BLEEDER PLUG CAP

16. REMOVE FRONT DISC BRAKE BLEEDER PLUG

17. INSPECT BRAKE CYLINDER AND PISTON

(a) Check the brake cylinder bore and front disc brake piston for rust or scoring.

If necessary, replace the brake cylinder and piston.

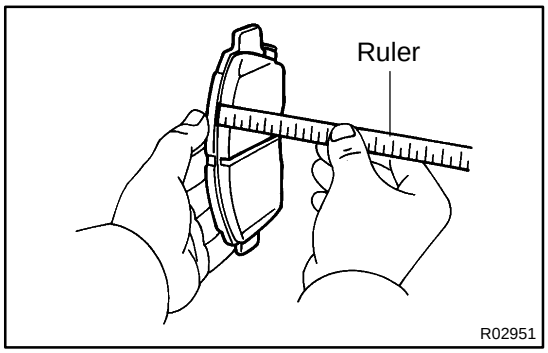

18. INSPECT PAD LINING THICKNESS

(a) Using a ruler, measure the pad lining thickness.

Standard thickness: 12.0 mm (0.472 in.)

Minimum thickness: 1.0 mm (0.039 in.)

If the pad lining thickness is equal to the minimum thickness or less, replace the brake pad.

19. INSPECT FRONT DISC BRAKE PAD SUPPORT PLATE

(a) Inspect the front disc brake pad support plate (No.1) and front disc brake pad support plate (No.2).

HINT:

Make sure that both have sufficient rebound, have no deformation, cracks or wear, and that all rust and dirt is cleaned off.

If necessary, replace the brake pad support plate.

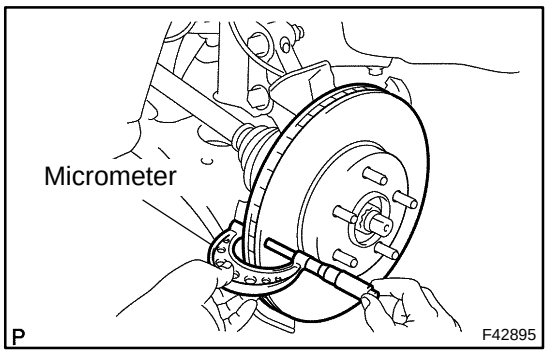

20. INSPECT DISC THICKNESS

(a) Using a micrometer, measure the disc thickness.

Standard thickness: 28.0 mm (1.102 in.)

Minimum thickness: 26.0 mm (1.024 in.)

If the disc thickness is less than the minimum, replace the disc.

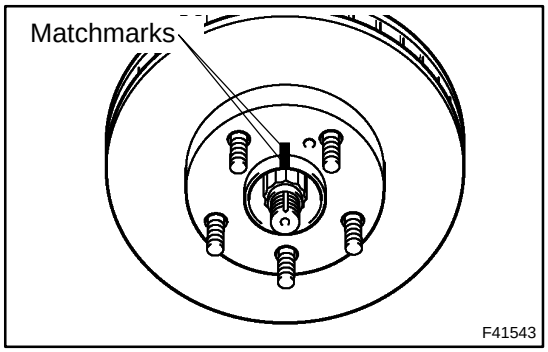

21. REMOVE FRONT DISC

(a) Put matchmarks on the front disc and the axle hub.

(b) Remove the front disc.

22. INSTALL FRONT DISC

(a) Aligning the matchmarks, install the front disc.

HINT:

When replacing the disc with a new one, select the installation position where the front disc has the minimum runout.

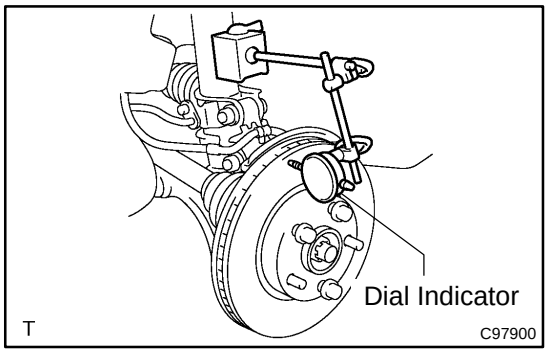

23. INSPECT DISC RUNOUT

(a) Check the bearing play in the axial direction and check for the axle hub runout (see page 30−2).

(b) Temporarily fasten the front disc together with the hub nuts.

Torque: 103 N·m (1,050 kgf·cm, 76 ft·lbf)

(c) Using a dial indicator, measure the disc runout 10 mm (0.39 in.) away from the outer edge of the front disc.

Maximum disc runout: 0.05 mm (0.0020 in.)

If the runout exceeds the maximum value, change the installation positions of the disc and axle so that the runout will become minimal. If the runout exceeds the maximum even when the installation positions are changed, grind the disc. If the disc thickness is less than the minimum, replace the front disc.

24. TEMPORARILY TIGHTEN FRONT DISC BRAKE BLEEDER PLUG

25. INSTALL FRONT DISC BRAKE BLEEDER PLUG CAP

26. INSTALL PISTON SEAL

(a) Apply lithium soap base glycol grease to a new piston seal.

(b) Install the piston seal to the front disc brake cylinder sub−assy.

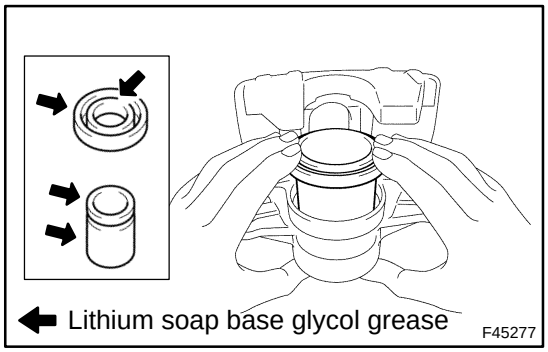

27. INSTALL FRONT DISC BRAKE PISTON

(a) Apply lithium soap base glycol grease to the front disc brake piston and new cylinder boot.

(b) Install the cylinder boot to the front disc brake piston.

(c) Install the front disc brake piston to the front disc brake cylinder sub−assy.

NOTICE:

Do not install the piston forcibly in the front disc brake cylinder sub−assy.

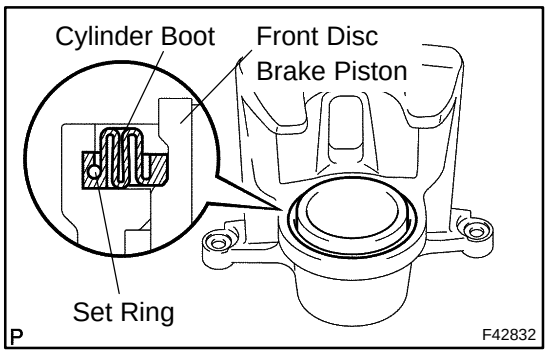

28. INSTALL CYLINDER BOOT

(a) Install the cylinder boot to the front disc brake cylinder sub−assy.

NOTICE:

Install the boot securely to the grooves of the cylinder and piston.

(b) Using a screwdriver, install the set ring.

NOTICE:

Do not damage the cylinder boot.

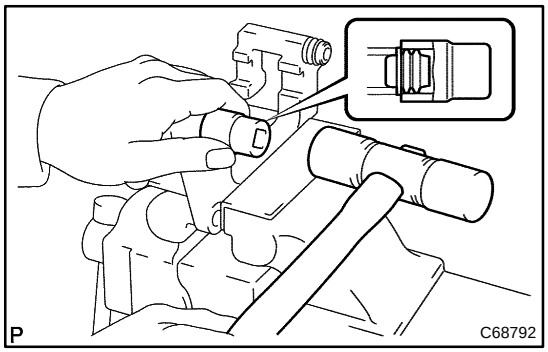

29. INSTALL FRONT DISC BRAKE BUSH DUST BOOT

(a) Hold the front disc brake cylinder mounting LH in the vise through the soft jaws.

(b) Place the front disc brake cylinder mounting LH in the vise.

(c) Apply lithium soap base glycol grease to the sealing surface of 2 new front disc brake bush dust boots (see page 32−33).

(d) Using a socket wrench (19 mm) and a hammer, drive the 2 front disc brake bush dust boots to the front disc brake cylinder mounting LH.

30. INSTALL FRONT DISC BRAKE CYLINDER SLIDE BUSH

(a) Apply lithium soap base glycol grease to a new front disc brake cylinder slide bush (see page 32−33).

(b) Install the cylinder slide bush to the bottom side of the front disc brake cylinder slide pin (No.2).

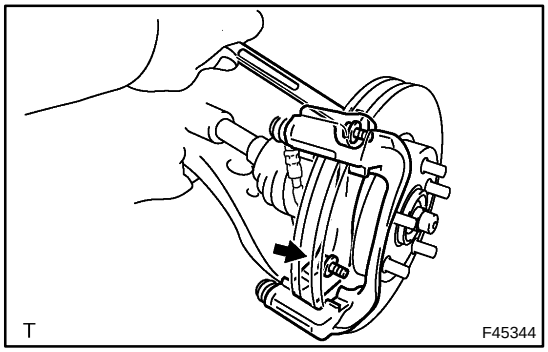

31. INSTALL FRONT DISC BRAKE CYLINDER MOUNTING

(a) Install the front disc brake cylinder mounting with the 2 bolts.

Torque: 107 N·m (1,090 kgf·cm, 79 ft·lbf)

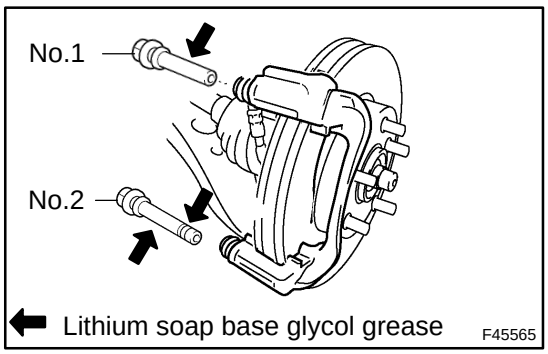

32. INSTALL FRONT DISC BRAKE CYLINDER SLIDE PIN

(a) Apply lithium soap base glycol grease to the sliding part and the sealing surface of the front disc brake cylinder slide pin (No.1) and front disc brake cylinder slide pin (No.2).

(b) Install the front disc brake cylinder slide pin (No.1) and front disc brake cylinder slide pin (No.2) to the front disc brake cylinder mounting LH.

33. INSTALL FRONT DISC BRAKE PAD SUPPORT PLATE

(a) Install the front disc brake pad support plate (No.1) and front disc brake pad support plate (No.2) to the front disc brake cylinder mounting LH.

NOTICE:

Install the pad support plates in the correct position and direction.

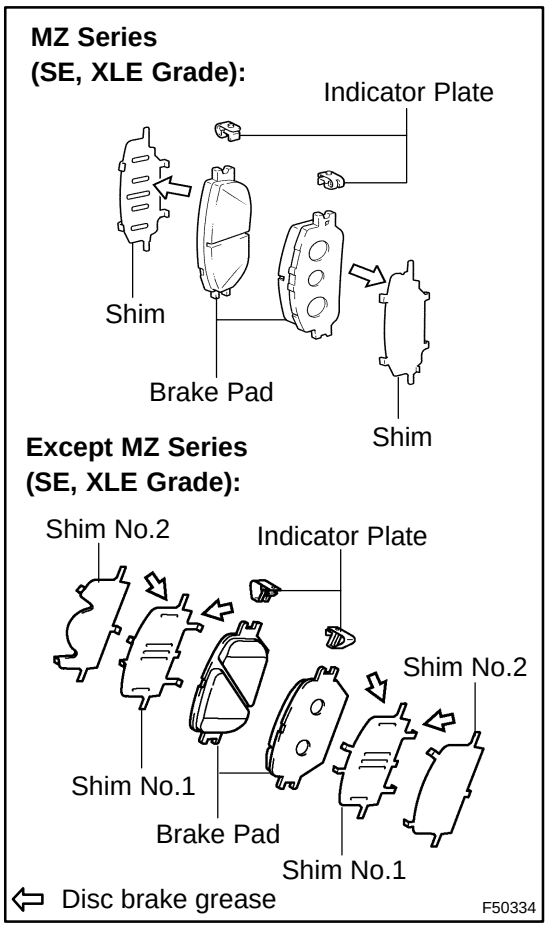

34. INSTALL ANTI SQUEAL SHIM KIT FRONT

NOTICE:

- **When replacing worn pads, the anti−squeal shims must be replaced together with the pads.**
- **Install the shims and pad wear indicator plates in the correct position and direction.**

(a) Apply disc brake grease to the anti−squeal shims as shown in the illustration.

(b) Install the anti−squeal shims on each pad as shown in the illustration.

(c) Install the pad wear indicator plates to each pad.

35. INSTALL DISC BRAKE PAD KIT FRONT (PAD ONLY)

(a) Install the disc brake pad kit front to the front disc brake cylinder mounting LH.

NOTICE:

- **There should be no oil or grease on the friction surface of the pads and the disc.**
- **Brake pads are installed with indicator plates facing upward.**

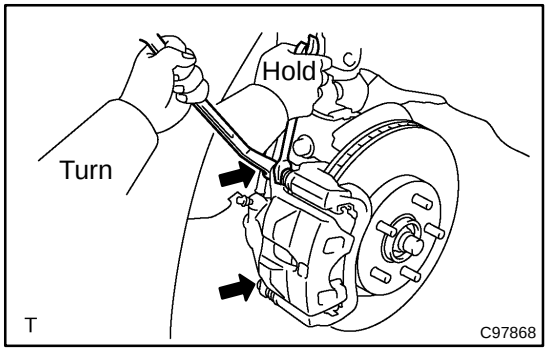

36. INSTALL FRONT DISC BRAKE CYLINDER SUB−ASSY

(a) Install the front disc brake cylinder sub−assy with the 2 bolts.

Torque: 34 N·m (350 kgf·cm, 25 ft·lbf)

37. INSTALL FRONT FLEXIBLE HOSE

(a) Install new gasket(s) and flexible hose with the union bolt.

Torque: 29 N·m (300 kgf·cm, 22 ft·lbf)

NOTICE:

Install the flexible hose lock securely in the lock hole in the disc brake cylinder.

HINT:

Gasket has 2 types: 2−piece type and 1−piece type.

38. FILL RESERVOIR WITH BRAKE FLUID (SEE PAGE 32−4)

39. BLEED MASTER CYLINDER (SEE PAGE 32−4)

SST 09023−00101

40. BLEED BRAKE LINE (SEE PAGE 32−4)
41. CHECK FLUID LEVEL IN RESERVOIR (SEE PAGE 32−4)
42. CHECK FOR BRAKE FLUID LEAKAGE
43. INSTALL FRONT WHEEL
Torque: 103 N·m (1,050 kgf·cm, 76 ft·lbf)

REAR DISC BRAKE

320D2−03

COMPONENTS

TMC made:

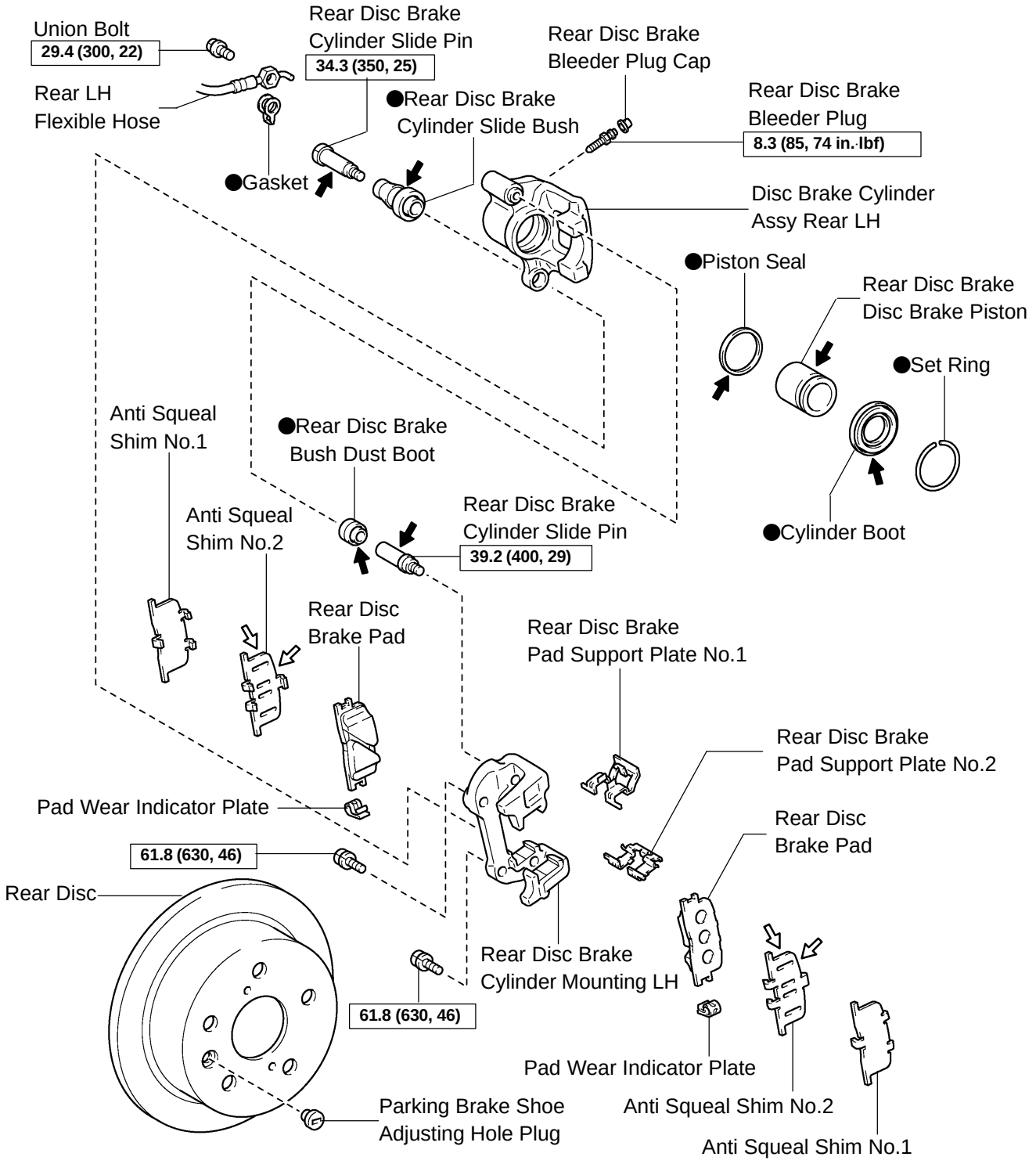

N·m (kgf·cm, ft·lbf) : Specified torque
● Non−reusable part
T ⬅ Lithium soap base glycol grease
⇦ Disc brake grease

F41546

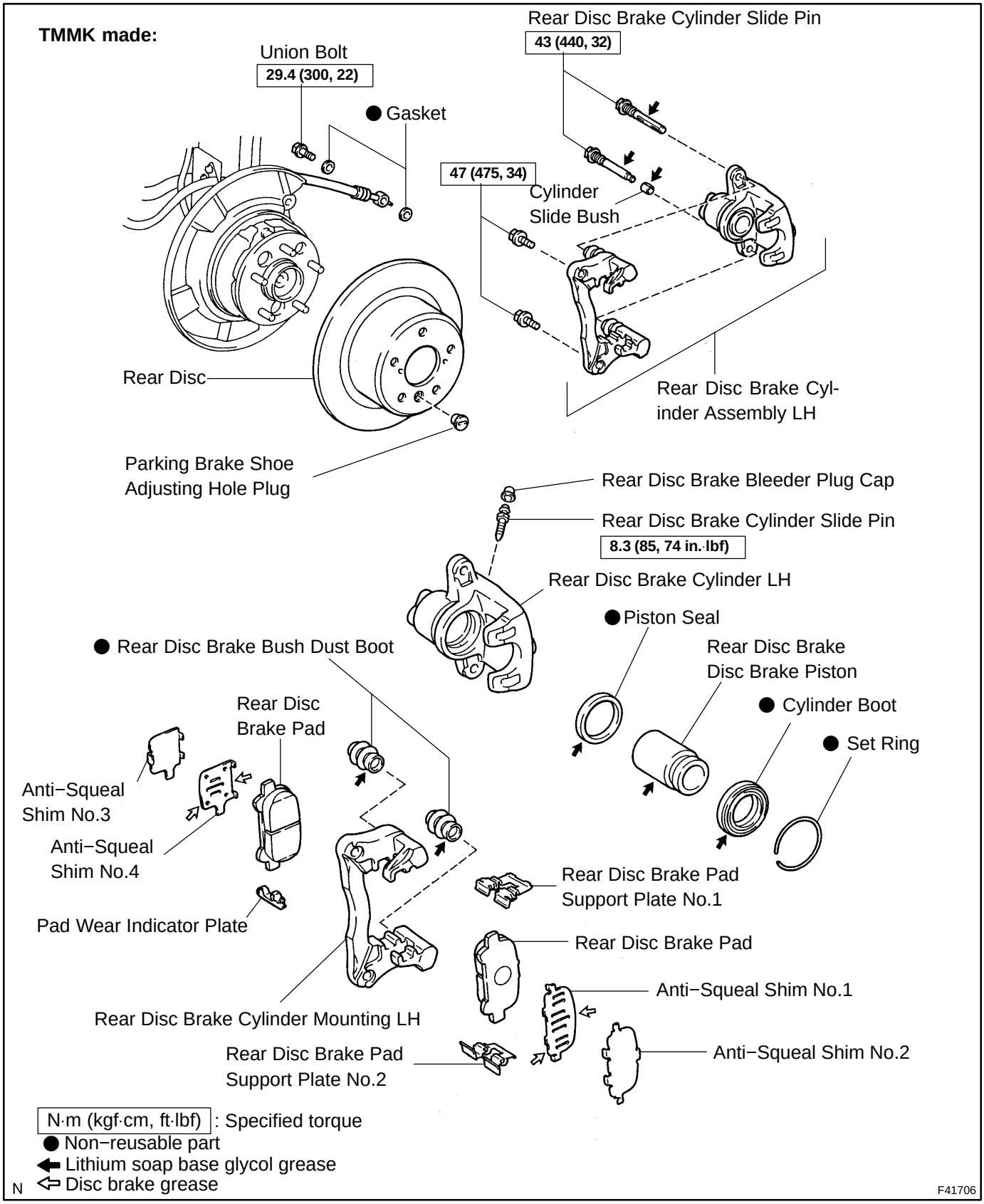
TMMK made:
Rear Disc Brake Cylinder Slide Pin
43 (440, 32)
Union Bolt
29.4 (300, 22)
● Gasket
47 (475, 34)
Cylinder Slide Bush
Rear Disc
Rear Disc Brake Cylinder Assembly LH
Parking Brake Shoe Adjusting Hole Plug
Rear Disc Brake Bleeder Plug Cap
Rear Disc Brake Cylinder Slide Pin
8.3 (85, 74 in.·lbf)
Rear Disc Brake Cylinder LH
● Piston Seal
● Rear Disc Brake Bush Dust Boot
Rear Disc Brake Disc Brake Piston
● Cylinder Boot
● Set Ring
Rear Disc Brake Pad
Anti−Squeal Shim No.3
Anti−Squeal Shim No.4
Rear Disc Brake Pad Support Plate No.1
Pad Wear Indicator Plate
Rear Disc Brake Pad
Anti−Squeal Shim No.1
Rear Disc Brake Cylinder Mounting LH
Rear Disc Brake Pad Support Plate No.2
Anti−Squeal Shim No.2
N·m (kgf·cm, ft·lbf) : Specified torque
● Non−reusable part
Lithium soap base glycol grease
Disc brake grease
N
F41706

320D3−05

OVERHAUL

HINT:

- COMPONENTS: See page 32−42
- Overhaul the RH side by the same procedures with LH side.
- Two types of brake pad exist; one is with slit and the other without slit.

1. REMOVE REAR WHEEL

2. DRAIN BRAKE FLUID

NOTICE:

Wash off the brake fluid immediately if it comes into contact with a painted surface.

3. DISCONNECT REAR LH FLEXIBLE HOSE

(a) Remove the union bolt and a gasket from the disc brake cylinder, then disconnect the flexible hose from the disc brake cylinder.

HINT:

Gasket has 2 types: 2−piece type and 1−piece type.

4. REMOVE REAR DISC BRAKE CYLINDER SLIDE PIN

(a) TMC made:
Remove the cylinder slide pin.

(b) TMMK made:
Remove the cylinder slide pin and cylinder slide bush.

5. REMOVE REAR DISC BRAKE CYLINDER ASSY LH

(a) TMC made:
Lift up the disc brake cylinder and remove the disc brake cylinder.

(b) TMMK made:
Remove the cylinder slide pin and disc brake cylinder.

6. REMOVE DISC BRAKE PAD KIT REAR (PAD ONLY)

(a) Remove the 2 brake pads with the anti−squeal shim.

7. REMOVE REAR DISC BRAKE ANTI SQUEAL SHIM KIT

(a) Remove the 2 anti−squeal shims and pad wear indicator from each of 2 brake pads.

(b) TMC made:
Remove the 2 pad wear indicator plates from each of 2 brake pads.

(c) TMMK made:
Remove the pad wear indicator plate from inner pad.

8. REMOVE REAR DISC BRAKE PAD SUPPORT PLATE

(a) Remove the rear disc brake pad support plate No.1.

9. REMOVE REAR DISC BRAKE PAD SUPPORT PLATE

(a) Remove the rear disc brake pad support plate No.2.

10. REMOVE REAR DISC BRAKE BUSH DUST BOOT

(a) TMC made:
Remove the rear disc brake bush dust boot.

(b) TMMK made:
Remove the 2 rear disc brake bush dust boots.

11. REMOVE REAR DISC BRAKE CYLINDER MOUNTING LH

(a) TMC made:
Using a hexagon wrench (ϕ8 mm), remove the cylinder slide pin.

(b) Remove the 2 bolts and cylinder mounting LH.

12. REMOVE CYLINDER BOOT

(a) Using a screwdriver, remove the set ring and disc cylinder boot.

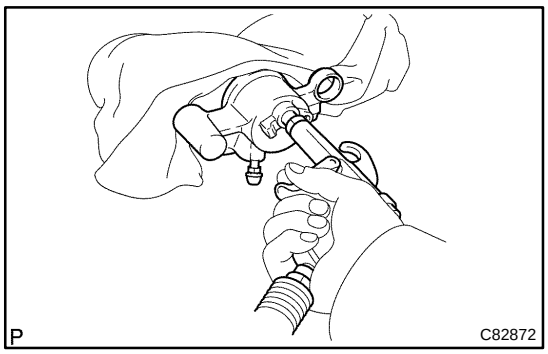

13. REMOVE REAR DISC BRAKE PISTON

(a) Place a piece of cloth or similar, between the piston and the disc brake cylinder.

(b) Use compressed air to remove the piston from the disc brake cylinder.

CAUTION:

Do not place your fingers in front of the piston when using compressed air.

NOTICE:

Do not spatter the brake fluid.

14. REMOVE PISTON SEAL

(a) Using a screwdriver, remove the piston seal from the brake cylinder.

NOTICE:

Do not damage the inner cylinder and the cylinder groove.

15. REMOVE REAR DISC BRAKE BLEEDER PLUG CAP

16. REMOVE REAR DISC BRAKE BLEEDER PLUG

17. INSPECT BRAKE CYLINDER AND PISTON

(a) Check the cylinder bore and piston for rust or scoring.

18. INSPECT PAD LINING THICKNESS

(a) Using a ruler, measure the pad lining thickness.
Standard thickness: 10.0 mm (0.394 in.)
Minimum thickness: 1.0 mm (0.039 in.)

19. INSPECT REAR DISC BRAKE PAD SUPPORT PLATE

(a) Make sure that they have sufficient rebound, no deformation cracks or wear, and have had all rust and dirt cleaned off.

20. INSPECT REAR DISC BRAKE PAD SUPPORT PLATE

(a) Make sure that they have sufficient rebound, no deformation cracks or wear, and have had all rust and dirt and cleaned off.

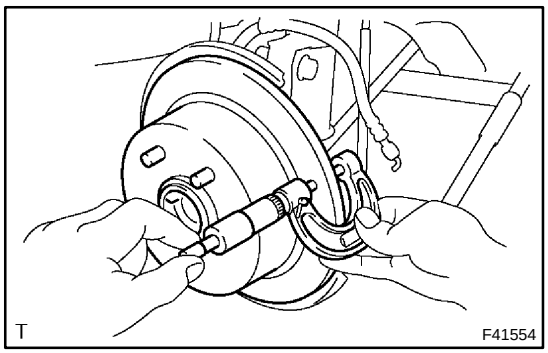

21. INSPECT DISC THICKNESS

(a) Using a micrometer, measure the disc thickness.
Standard thickness: 12.0 mm (0.472 in.)
Minimum thickness: 10.5 mm (0.413 in.)

22. REMOVE PARKING BRAKE SHOE ADJUSTING HOLE PLUG

23. REMOVE REAR DISC

(a) Put matchmarks on the disc and the axle hub.

(b) Remove the disc.

24. INSTALL REAR DISC

(a) Aligning the matchmarks, install the rear disc.

HINT:

When replacing the disc with new one, select the installation position where the disc has the minimum runout.

25. INSTALL PARKING BRAKE SHOE ADJUSTING HOLE PLUG

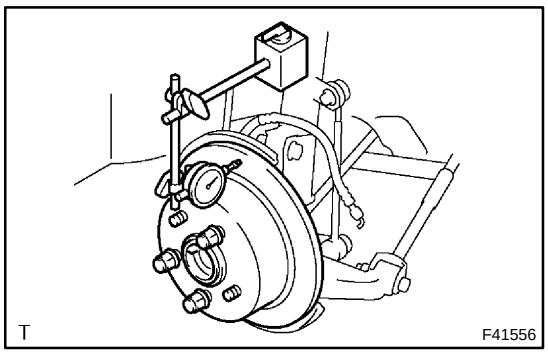

26. INSPECT DISC RUNOUT

(a) Temporarily fasten the disc with hub nuts.
Torque: 103 N·m (1,050 kgf·cm, 76 ft·lbf)

(b) Using dial indicator, measure the disc runout 10 mm (0.39 in.) away from the outer edge of the disc.
Maximum disc runout: 0.15 mm (0.0059 in.)

(c) If the disc's runout is maximum value or greater, check the bearing play in the axial direction and check the axle hub runout. (See page 30−2)If the bearing play and axle hub runout are not abnormal, adjust the disc runout or grind it on a "On−car" brake lathe.

27. ADJUST PARKING BRAKE SHOE CLEARANCE (See page 33−19)

28. TEMPORARILY TIGHTEN REAR DISC BRAKE BLEEDER PLUG

(a) Temporarily tighten the bleeder plug to the disc brake cylinder.

29. INSTALL REAR DISC BRAKE BLEEDER PLUG CAP

30. INSTALL PISTON SEAL

(a) Apply the lithium soap base glycol grease on a new piston seal.

(b) Install the piston seal to the disc brake cylinder.

31. INSTALL REAR DISC BRAKE PISTON

(a) Apply the lithium soap base glycol grease on the piston.

(b) Install the piston to the disc brake cylinder.

NOTICE:

Do not screw the piston forcedly in the disc brake cylinder.

32. INSTALL CYLINDER BOOT

(a) Apply the lithium soap base glycol grease on a new cylinder boot.

(b) Install the cylinder boot to the disc brake cylinder.

HINT:

Install the boot securely to the grooves of the cylinder and piston.

(c) Using a screwdriver, install a new set ring.

NOTICE:

Do not damage the cylinder boot.

33. INSTALL REAR DISC BRAKE CYLINDER MOUNTING LH

(a) Install the cylinder mounting LH with the 2 bolts.
Torque:
TMC made: 61.8 N·m (630 kgf·cm, 46 ft·lbf)
TMMK made: 47 N·m (475 kgf·cm, 34 ft·lbf)

34. INSTALL REAR DISC BRAKE CYLINDER SLIDE PIN

(a) TMC made:
Using a hexagon wrench (8 mm), install the cylinder slide pin.
Torque: 39.2 N·m (400 kgf·cm, 29 ft·lbf)

(b) TMMK made:
Install the cylinder slide pin with the cylinder slide bush.
Torque: 43 N·m (440 kgf·cm, 32 ft·lbf)

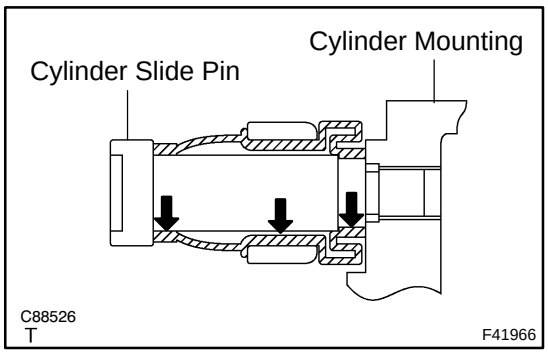

35. INSTALL REAR DISC BRAKE CYLINDER SLIDE BUSH (TMC MADE)

(a) Apply the lithium soap base glycol grease on a new cylinder slide bush.

(b) Install the cylinder slide bush to the disc brake cylinder assy.

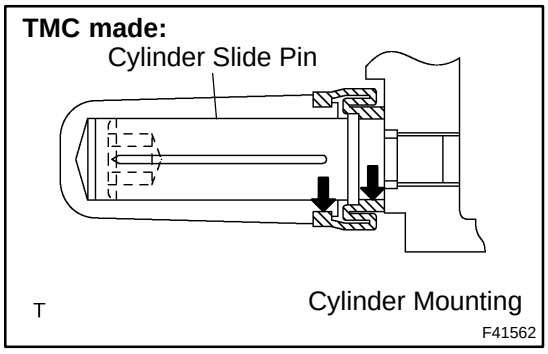

36. INSTALL REAR DISC BRAKE BUSH DUST BOOT

(a) TMC made:

Install the rear disc brake bush dust boot.

(1) Apply the lithium soap base glycol grease to seal surface of a new bush dust boot.

(2) Install the bush dust boot to the cylinder slide pin.

(b) TMMK made:

Install the rear disc brake bush dust boot.

(1) Apply the lithium soap base glycol grease to seal surface of a 2 new bush dust boots.

(2) Install the 2 bush dust boots to the each cylinder slide pin.

37. INSTALL REAR DISC BRAKE PAD SUPPORT PLATE

(a) Install the rear disc brake pad support plate No.1.

38. INSTALL REAR DISC BRAKE PAD SUPPORT PLATE

(a) Install the rear disc brake pad support plate No.2.

39. INSTALL REAR DISC BRAKE ANTI SQUEAL SHIM KIT

(a) Coat the both sides of No.1 anti−squeal shim with pad grease all over, and install the shim together with No.2 anti−squeal shim to each pad.

(b) TMC made:

Install the 2 pad wear indicator plates to the each of 2 brake pads.

NOTICE:

When replacing worn pads, the anti−squeal shims must be replaced together with the pads.

(c) TMMK made:

Install the pad wear indicator plate to the inner pad.

NOTICE:

When replacing worn pads, the anti−squeal shims must be replaced together with the pads.

40. INSTALL DISC BRAKE PAD KIT REAR (PAD ONLY)

(a) Install the 2 brake pads with the anti−squeal shim.

NOTICE:

There should be no oil or grease on to the friction surface of the pads and the disc.

41. INSTALL REAR DISC BRAKE CYLINDER ASSY LH (TMC MADE)

(a) Apply the lithium soap base glycol grease to the cylinder slide pin.

(b) Install the disc brake cylinder assembly rear LH to the cylinder slide pin.

42. INSTALL REAR DISC BRAKE CYLINDER SLIDE PIN

(a) Apply the lithium soap base glycol grease to the cylinder slide pin.

(b) Install and torque the cylinder slide pin to the disc brake cylinder assembly.

Torque:

TMC made: 34.3 N·m (350 kgf·cm, 25 ft·lbf)

TMMK made: 43 N·m (440 kgf·cm, 32 ft·lbf)

43. CONNECT REAR LH FLEXIBLE HOSE

(a) Connect a new gasket and flexible hose with the union bolt.
Torque: 29.4 N·m (300 kgf·cm, 22 ft·lbf)

44. FILL RESERVOIR WITH BRAKE FLUID

45. BLEED MASTER CYLINDER (See page 32−4)
SST 09023−00101

46. BLEED BRAKE LINE (See page 32−4)

47. CHECK FLUID LEVEL IN RESERVOIR

48. CHECK BRAKE FLUID LEAKAGE

49. INSTALL REAR WHEEL
Torque: 103 N·m (1,050 kgf·cm, 76 ft·lbf)

REAR DRUM BRAKE

320D4−03

COMPONENTS

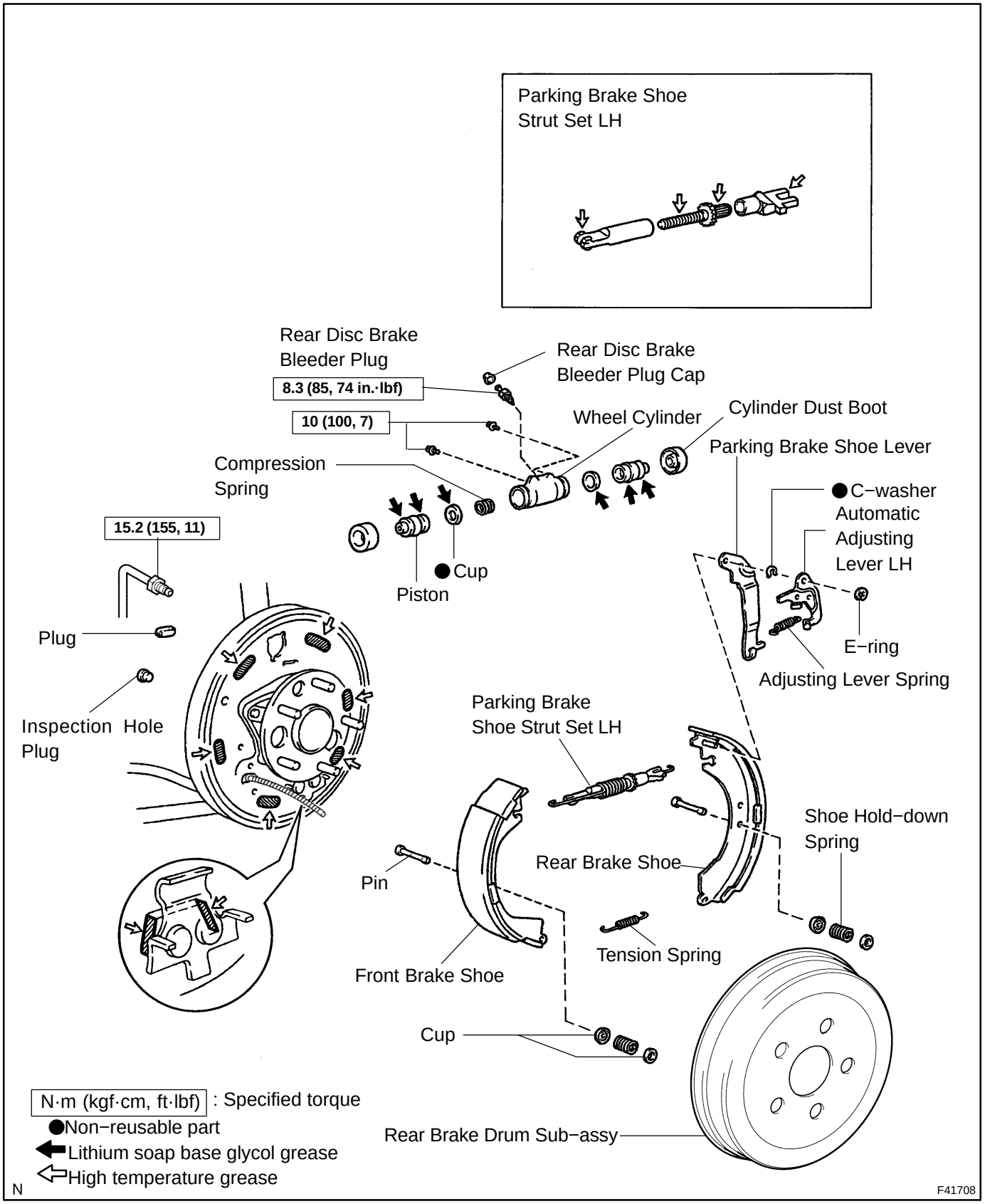

BRAKE ACTUATOR ASSY (W/O VSC)

3203J−10

ON−VEHICLE INSPECTION

1. CONNECT HAND−HELD TESTER:

(a) Connect the hand−held tester to the DLC3.

(b) Start the engine and run it at idle.

(c) Select the ACTIVE TEST mode on the hand−held tester.

HINT:

Please refer to the hand−held tester operator's manual for further details.

2. INSPECT ACTUATOR MOTOR OPERATION

(a) With the motor relay ON, check the actuator motor operation noise.

(b) Turn the motor relay OFF.

(c) Depress the brake pedal and hold it for about 15 seconds. Check that the brake pedal cannot be depressed.

(d) With the motor relay ON, check that the pedal does not pulsate.

NOTICE:

Do not keep motor relay ON for more than 5 seconds continuously. When operating it continuously, set the interval of more than 20 seconds.

(e) Turn the motor relay OFF and release the brake pedal.

3. INSPECT RIGHT FRONT WHEEL OPERATION

NOTICE:

Never turn ON the solenoid which is not described below.

(a) With the brake pedal depressed, perform the following operations.

(b) Turn the SFRH and SFRR solenoid ON simultaneously, and check that the pedal cannot be depressed.

NOTICE:

Do not keep solenoid ON for more than 10 seconds continuously. When operating it continuously, set the interval of more than 20 seconds.

(c) Turn the SFRH and SFRR solenoid OFF simultaneously, and check that the pedal can be depressed.

(d) Turn the motor relay ON, and check that the pedal returns.

NOTICE:

Do not keep motor relay ON for more than 5 seconds continuously. When operating it continuously, set the interval of more than 20 seconds.

(e) Turn the motor relay OFF and release the brake pedal.

4. INSPECT OTHER WHEEL OPERATION

(a) As in the same procedure, check the solenoids of other wheels.

HINT:

Left front wheel: SFLH, SFLR

Right rear wheel: SRRH, SRRR

Left rear wheel: SRLH, SRLR

320CQ−05

REPLACEMENT

1. DRAIN BRAKE FLUID

NOTICE:

Wash off the brake fluied immediately if it comes into contact with a painted surface.

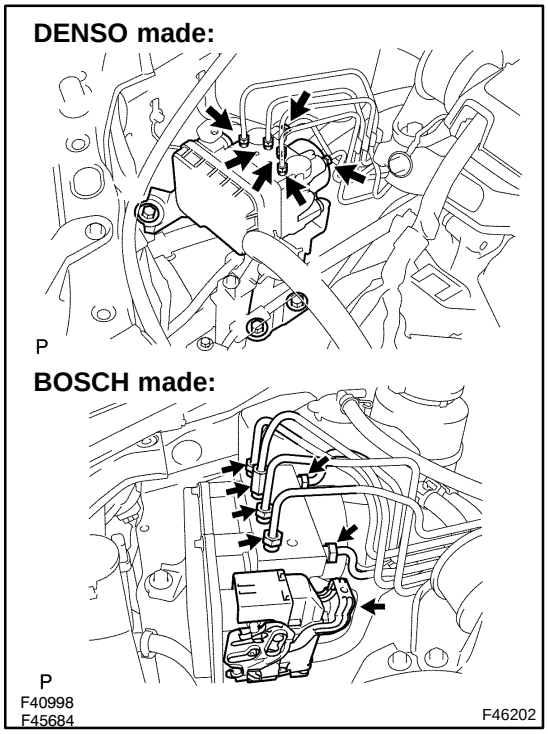

2. REMOVE BRAKE ACTUATOR WITH BRACKET

(a) Using SST, disconnect the 6 brake lines from the actuator.
SST 09023−00101

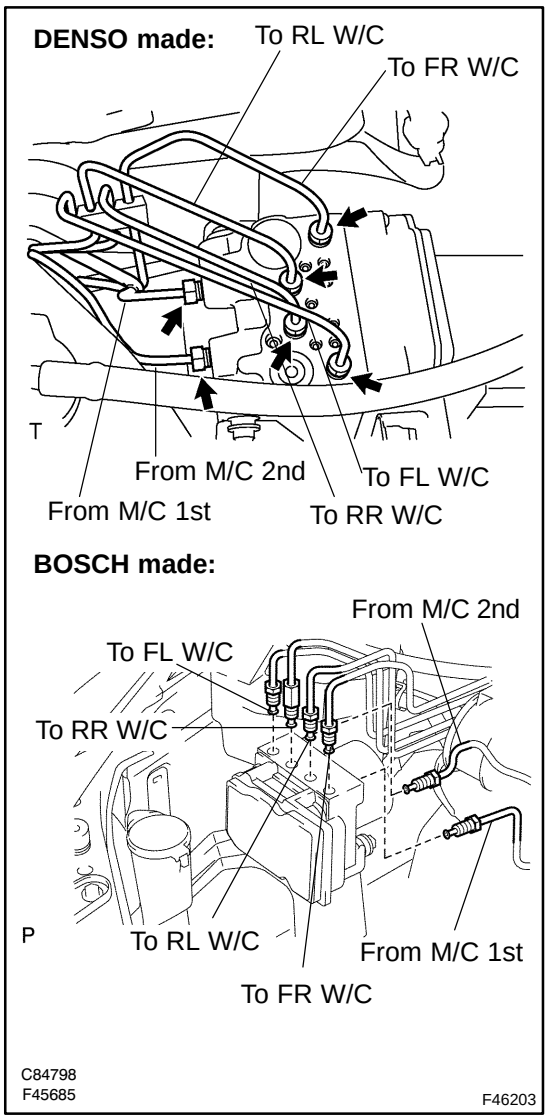

(b) Use tags or make a memo to identify the place to reconnect.
(c) Disconnect the brake actuator connector.
(d) Remove the 3 nuts and brake actuator with bracket.

3. REMOVE BRAKE ACTUATOR ASSY

(a) Remove the 2 nuts and brake actuator from the bracket.

4. INSTALL BRAKE ACTUATOR ASSY

(a) Install the brake actuator to the bracket with the 2 nuts.

Torque:
DENSO made: 5.4 N·m (55 kgf·cm, 48 in.·lbf)
BOSCH made: 8.0 N·m (82 kgf·cm, 71 in.·lbf)

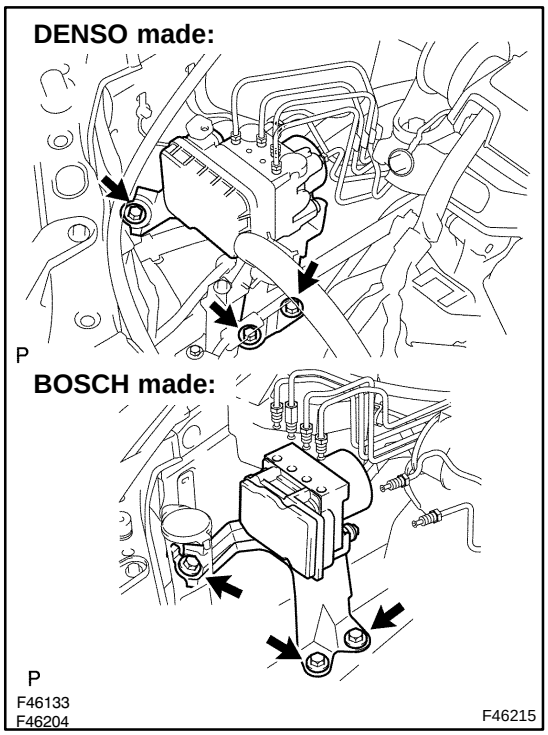

5. INSTALL BRAKE ACTUATOR WITH BRACKET

(a) Install the brake actuator with the 3 nuts.
Torque: 19 N·m (194 kgf·cm, 14 ft·lbf)

(b) Connect the brake actuator connector.

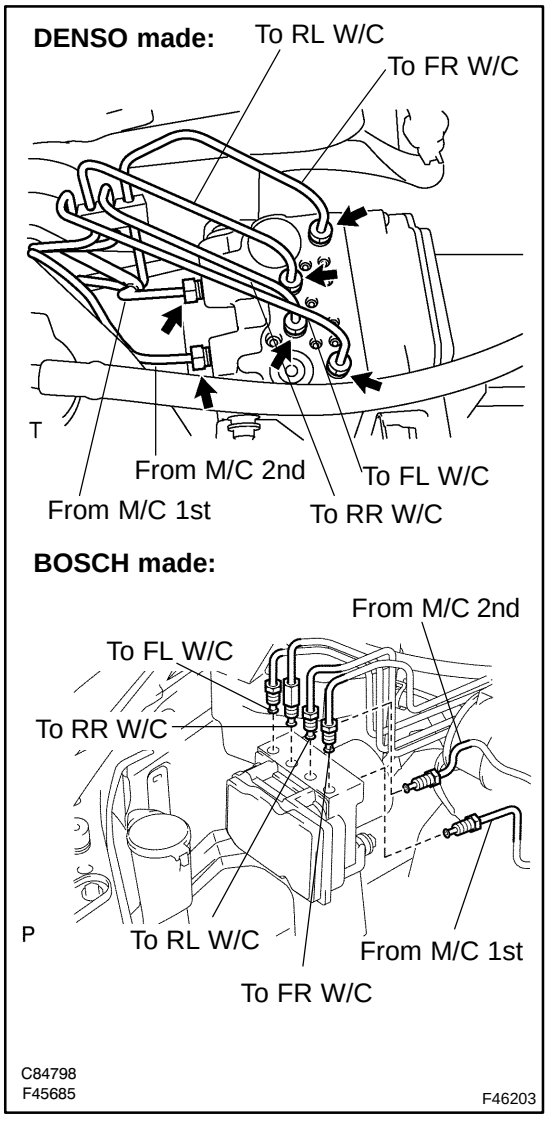

(c) Using SST, connect the each brake line to the correct position of brake actuator, as shown in the illustration.
SST 09023−00101
Torque: 15 N·m (155 kgf·cm, 11 ft·lbf)

6. **FILL RESERVOIR WITH BRAKE FLUID**
7. **BLEED MASTER CYLINDER (See page 32−4)**
   SST 09023−00101
8. **BLEED BRAKE LINE (See page 32−4)**
9. **CHECK FLUID LEVEL IN RESERVOIR**
10. **CHECK BRAKE FLUID LEAKAGE**
11. **CHECK OPERATION OF BRAKE ACTUATOR (See page 32−4)**

BRAKE ACTUATOR ASSY (W/ VSC)

3203L−07

ON−VEHICLE INSPECTION

1. CONNECT HAND−HELD TESTER:

(a) Connect the hand−held tester to the DLC3.

(b) Start the engine and run it at idle.

(c) Select the ACTIVE TEST mode on the hand−held tester.

HINT:

Please refer to the hand−held tester operator's manual for further details.

2. INSPECT ACTUATOR MOTOR OPERATION

(a) With the motor relay ON, check the actuator motor operation noise.

(b) Turn the motor relay OFF.

(c) Depress the brake pedal and hold it for about 15 seconds. Check that the brake pedal cannot be depressed.

(d) With the motor relay ON, check that the pedal does not pulsate.

NOTICE:

Do not keep motor relay ON for more than 5 seconds continuously. When operating it continuously, set the interval of more than 20 seconds.

(e) Turn the motor relay OFF and release the brake pedal.

3. INSPECT RIGHT FRONT WHEEL OPERATION

NOTICE:

Never turn ON the solenoid which is not described below.

(a) With the brake pedal depressed, perform the following operations.

(b) Turn the SFRH and SFRR solenoid ON simultaneously, and check that the pedal cannot be depressed.

NOTICE:

Do not keep solenoid ON for more than 10 seconds continuously. When operating it continuously, set the interval of more than 20 seconds.

(c) Turn the SFRH and SFRR solenoid OFF simultaneously, and check that the pedal can be depressed.

(d) Turn the motor relay ON, and check that the pedal returns.

NOTICE:

Do not keep motor relay ON for more than 5 seconds continuously. When operating it continuously, set the interval of more than 20 seconds.

(e) Turn the motor relay OFF and release the brake pedal.

4. INSPECT OTHER WHEEL OPERATION

(a) As in the same procedure, check the solenoids of other wheels.

HINT:

Left front wheel: SFLH, SFLR

Right rear wheel: SRRH, SRRR

Left rear wheel: SRLH, SRLR

3211U−04

REPLACEMENT

1. DRAIN BRAKE FLUID

NOTICE:

Wash off the brake fluied immediately if it comes into contact with a painted surface.

2. REMOVE BRAKE ACTUATOR WITH BRACKET

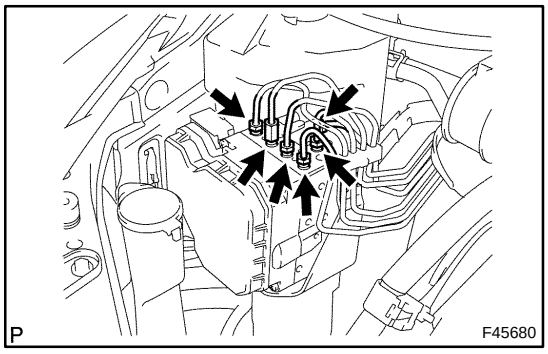

(a) Using SST, disconnect the 6 brake lines from the actuator.
SST 09023−00101

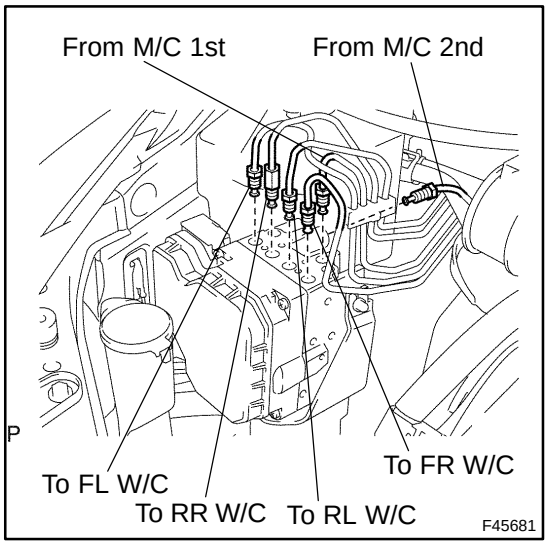

(b) Use tags or make a memo to identify the place to reconnect.

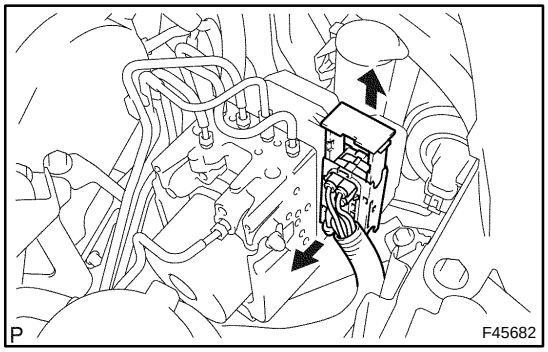

(c) Disconnect the actuator connector.

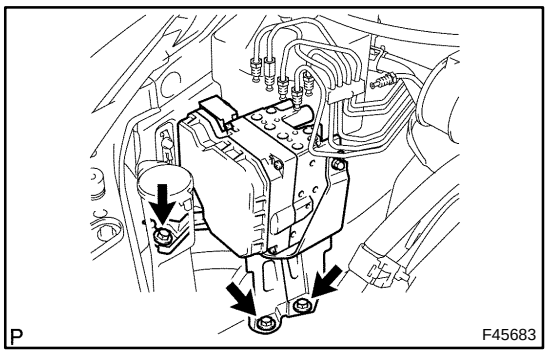

(d) Remove the 3 nuts and brake actuator with bracket.

3. REMOVE BRAKE ACTUATOR ASSY

(a) Remove the 2 nuts and BRAKE actuator from the bracket.

4. INSTALL BRAKE ACTUATOR ASSY

(a) Install the BRAKE actuator to the bracket with the 2 nuts.
Torque: 5.4 N·m (55 kgf·cm, 48 in.·lbf)

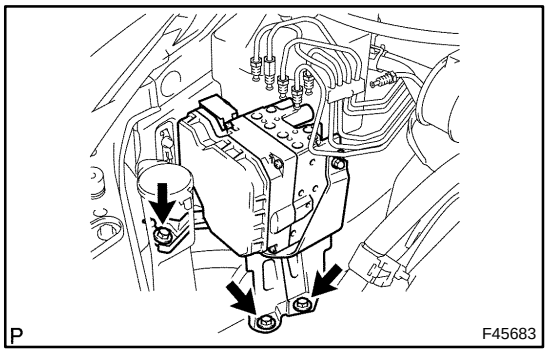

5. INSTALL BRAKE ACTUATOR WITH BRACKET

(a) Install the brake actuator with the 3 nuts.
Torque: 19 N·m (194 kgf·cm, 14 ft·lbf)

(b) Connect the brake actuator connector.

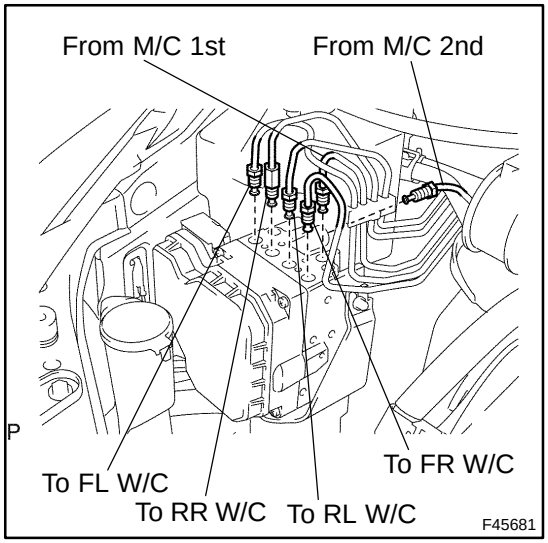

(c) Using SST, connect the each brake line to the correct position of brake actuator, as shown in the illustration.
SST 09023−00101
Torque: 15 N·m (155 kgf·cm, 11 ft·lbf)

6. FILL RESERVOIR WITH BRAKE FLUID

7. BLEED MASTER CYLINDER (See page 32−4)
SST 09023−00101

8. BLEED BRAKE LINE (See page 32−4)

9. BLEED BRAKE ACTUATOR ASSY (See page 32−4)
SST 09992−00242, 09992−00350
10. CHECK FLUID LEVEL IN RESERVOIR
11. CHECK BRAKE FLUID LEAKAGE
12. CHECK OPERATION OF BRAKE ACTUATOR (See page 32−28)

SPEED SENSOR FRONT LH

3203N−12

REPLACEMENT

HINT:

Replace the RH side by the same procedures with LH side.

1. REMOVE FRONT WHEEL

2. REMOVE FRONT FENDER LINER LH

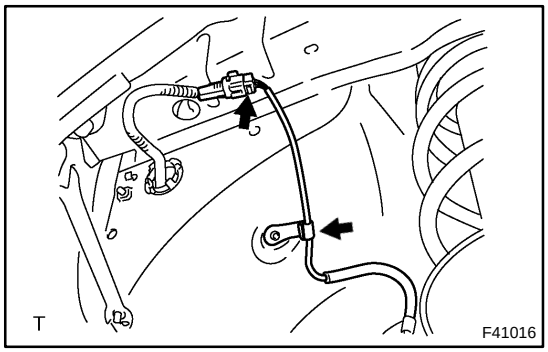

3. REMOVE SPEED SENSOR FRONT LH

(a) Disconnect the speed sensor connector and clamp.

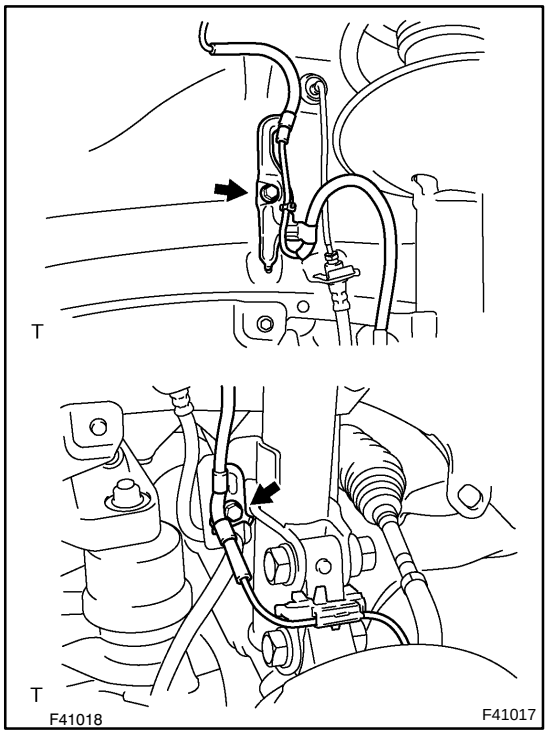

(b) Remove the 2 clamp bolts holding the sensor harness and clamp from the body and shock absorber.

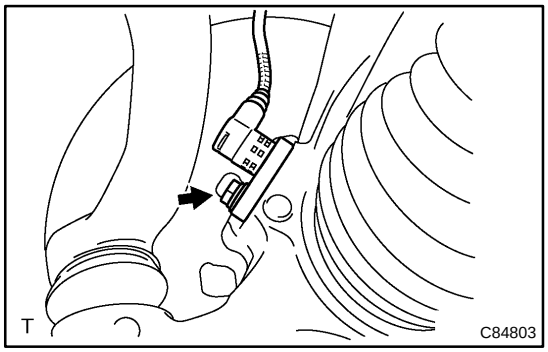

(c) Remove the bolt and speed sensor FR LH.

NOTICE:

Do not stick and foreign matter on the sensor tip.

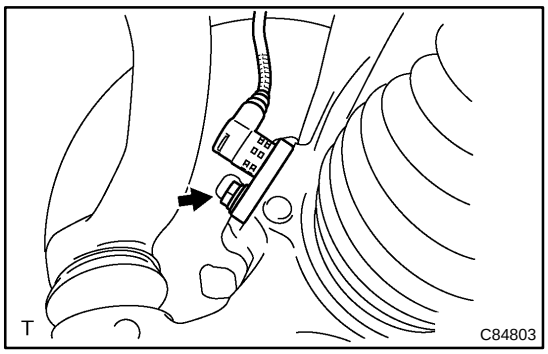

4. INSTALL SPEED SENSOR FRONT LH

(a) Install the speed sensor FR LH with the bolt.
Torque: 8.0 N·m (82 kgf·cm, 71 in.·lbf)

NOTICE:
Make sure the sensor tip is clean.

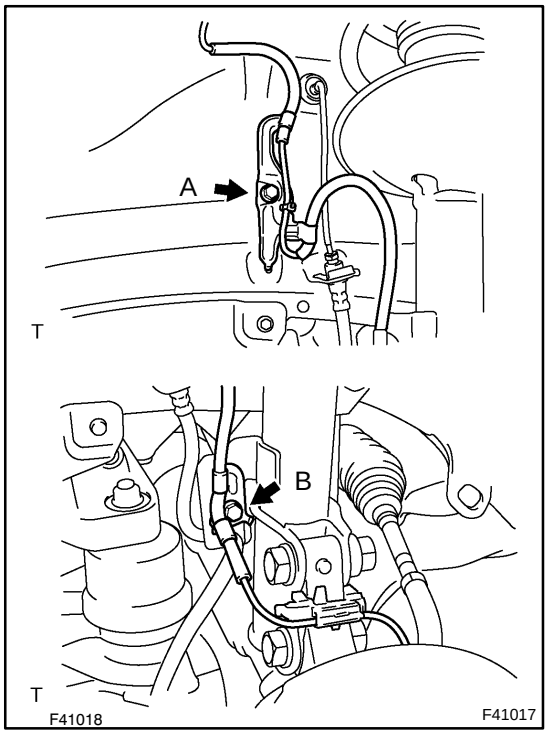

(b) Install the sensor harness clamps with the 2 bolts ”A” and ”B” to the body and shock absorber.
Torque:
Bolt A: 5.0 N·m (51 kgf·cm, 44 in.·lbf)
Bolt B: 18.8 N·m (192 kgf·cm, 14 ft·lbf)

(c) Connect the clamp to the knuckle.

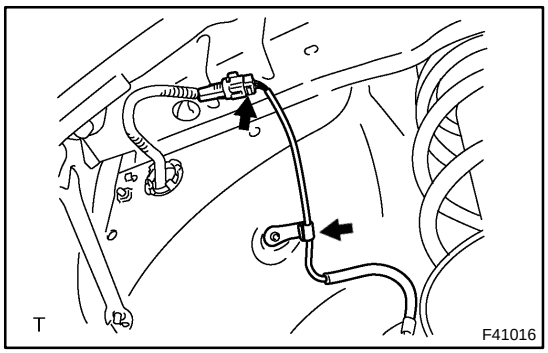

(d) Connect the speed sensor connector and clamp.

5. INSTALL FRONT FENDER LINER LH

6. INSTALL FRONT WHEEL
Torque: 103 N·m (1,050 kgf·cm, 76 ft·lbf)

7. CHECK ABS SPEED SENSOR SIGNAL (See page 05−873, 05−933 or 05−990)

SKID CONTROL SENSOR

320CS−06

REPLACEMENT

HINT:

Replace the RH side by the same procedure with LH side.

1. REMOVE REAR WHEEL

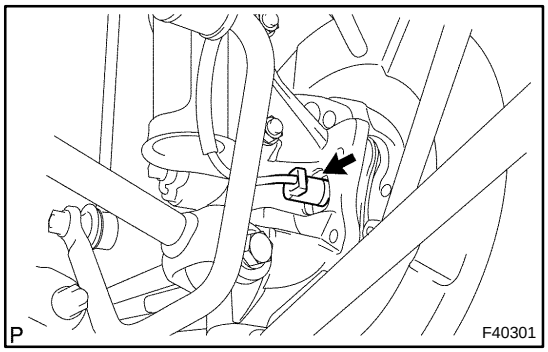

2. DISCONNECT SKID CONTROL SENSOR WIRE

(a) Disconnect the connector from the skid control sensor.

3. REMOVE REAR DISC BRAKE CALIPER ASSY LH (See page 32−44)

4. REMOVE REAR DISC

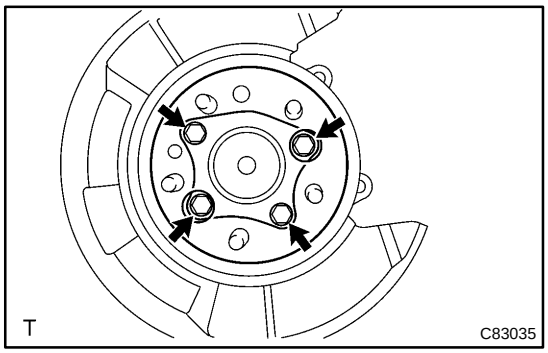

5. REMOVE REAR AXLE HUB & BEARING ASSY LH

(a) Remove the 4 bolts and rear axle hub & bearing assy.

6. REMOVE SKID CONTROL SENSOR

(a) Mount the rear axle hub in a soft jaw vise.

NOTICE:

Replace the axle hub assembly if it is dropped or a strong shock is given to it.

(b) Using a pin punch and hammer, drive out the 2 pins and remove the 2 attachments from SST.

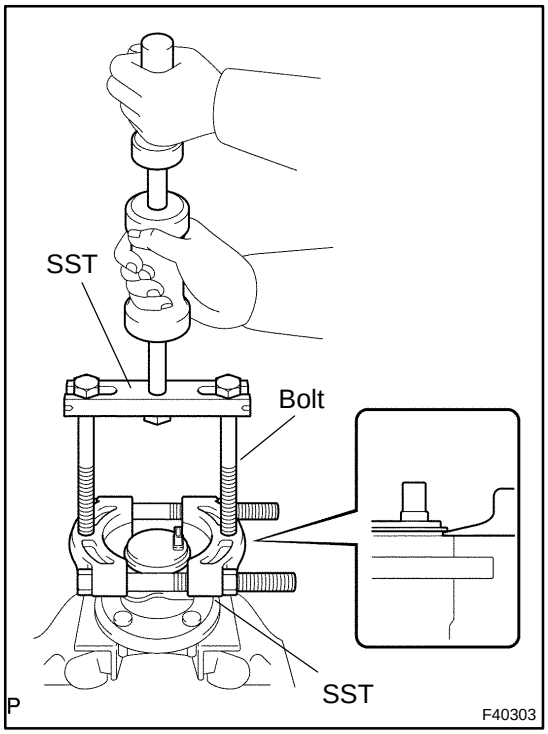

(c) Using SST and 2 bolts (Diameter: 12 mm, pitch: 1.5 mm), remove the skid control sensor from the rear axle hub.

SST 09520−00031 (09520−00040), 09521−00020, 09950−00020

NOTICE:

- **If a damage is inflicted to the sensor rotor, replace the axle hub assembly.**
- **Do not scratch the contacting surface of axle hub and speed sensor.**

7. INSTALL SKID CONTROL SENSOR

(a) Clean the contacting surface of the axle hub and a new skid control sensor.

NOTICE:

Make sure the sensor rotor is clean.

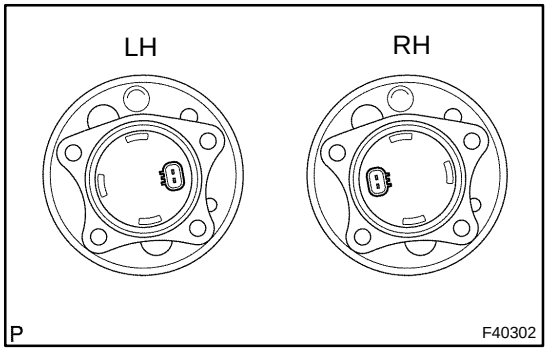

(b) Place the speed sensor on the axle hub so that the connector is positioned, as shown in the illustration.

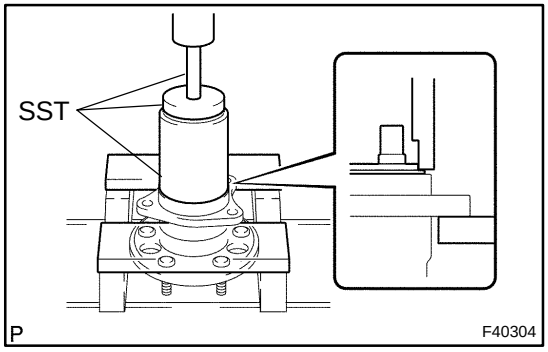

(c) Using SST and a press, install the skid control sensor to the axle hub.

SST 09830−36010, 09950−60010 (09951−00650), 09950−70010 (09951−07100)

NOTICE:

- **Do not tap the skid control sensor with a hammer directly.**
- **Check that the skid control sensor detection part is clean.**
- **Press in the skid control sensor straight and slowly.**

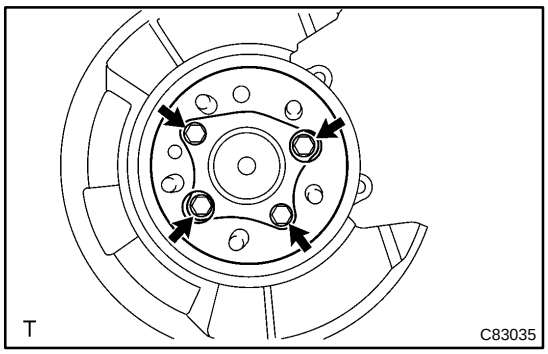

8. INSTALL REAR AXLE HUB & BEARING ASSY LH

(a) Install the rear axle hub & bearing assy with the 4 bolts.
Torque: 80 N·m (816 kgf·cm, 59 ft·lbf)

9. INSTALL REAR DISC

10. INSTALL REAR DISC BRAKE CALIPER ASSY LH (See page 32−44)

11. CONNECT SKID CONTROL SENSOR WIRE

12. INSTALL REAR WHEEL
Torque: 103 N·m (1,050 kgf·cm, 76 ft·lbf)

13. INSPECT TIRE (See page 28−1)

14. MEASURE VEHICLE HEIGHT (See page 26−5)

15. INSPECT SIDE SLIP (See page 27−3)

16. INSPECT CAMBER (See page 27−3)

17. INSPECT TOE−IN (See page 27−3)

18. ADJUST CAMBER AND TOE−IN (See page 27−3)

19. CHECK ABS SPEED SENSOR SIGNAL (See page 05−873, 05−938 or 05−1002)

YAWRATE SENSOR

320D6−07

REPLACEMENT

NOTICE:

Do not separate the sensor from the bracket.

1. **REMOVE CONSOLE PANEL UPPER REAR (See page 71−16)**
2. **REMOVE RR CONSOLE BOX (See page 71−16)**

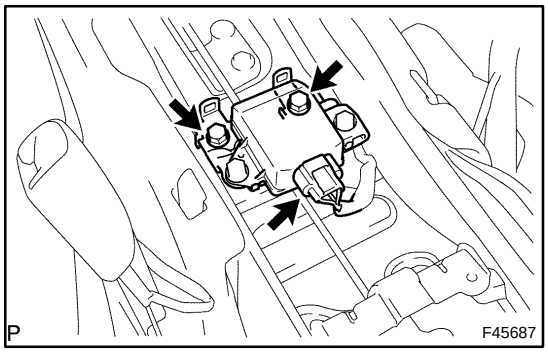

3. **REMOVE YAWRATE SENSOR**

(a) Disconnect the yawrate sensor connector.

(b) Remove the 2 bolts and yawrate sensor.

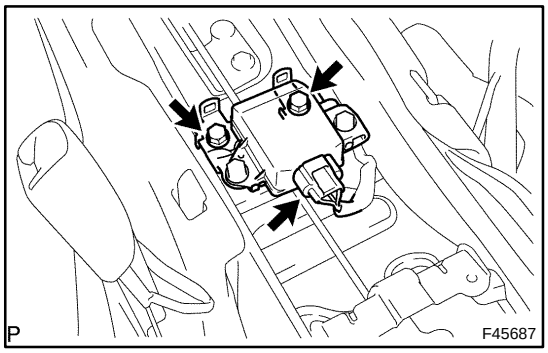

4. **INSTALL YAWRATE SENSOR**

(a) Install the yawrate sensor with the 2 bolts.

Torque: 12.5 N·m (127 kgf·cm, 9 ft·lbf)

(b) Connect the yawrate sensor connector.

5. **INSTALL RR CONSOLE BOX (See page 71−16)**
6. **INSTALL CONSOLE PANEL UPPER REAR (See page 71−16)**
7. **PERFORM YAWRATE SENSOR ZERO POINT CALIBRATION (See page 05−987)**

STEERING SENSOR

3203S−10

REPLACEMENT

1. **PRECAUTION (See page 60−1)**
2. **SEPARATE BATTERY NEGATIVE TERMINAL**
3. **PLACE FRONT WHEELS FACING STRAIGHT AHEAD**
4. **REMOVE STEERING WHEEL COVER LOWER NO.2**
5. **REMOVE STEERING WHEEL COVER LOWER NO.2 (4 SPOKE STEERING WHEEL ASSY)**
6. **REMOVE STEERING WHEEL COVER LOWER NO.3 (3 SPOKE STEERING WHEEL ASSY)**
7. **REMOVE HORN BUTTON ASSY (See page 60−25)**
8. **REMOVE STEERING WHEEL ASSY (See page 50−9 or 50−21)**
   SST 09950−50013 (09951−05010, 09952−05010, 09953−05020, 09954−05021)
9. **REMOVE INSTRUMENT CLUSTER FINISH PANEL (See page 71−16)**
10. **REMOVE STEERING COLUMN COVER (See page 50−9)**
11. **REMOVE SPIRAL CABLE SUB−ASSY (See page 60−34)**
12. **REMOVE STEERING SENSOR**
13. **INSTALL STEERING SENSOR**
14. **INSPECT SPIRAL CABLE SUB−ASSY**

(a) If the following condition is identified, replace the spiral cable sub−assy with new one.
Condition:
Scratches or cracks on the connector
Cracks, dents or chipping of the spiral cable sub−assy

15. **PLACE FRONT WHEELS FACING STRAIGHT AHEAD**
16. **INSTALL SPIRAL CABLE SUB−ASSY (See page 60−34)**
17. **CENTER SPIRAL CABLE (See page 60−34)**
18. **INSTALL STEERING WHEEL ASSY (See page 50−9)**
19. **INSTALL HORN BUTTON ASSY (See page 60−25)**
20. **INSPECT HORN BUTTON ASSY (See page 60−25)**
21. **INSPECT SRS WARNING LIGHT (See page 05−1464)**

ADJUSTABLE PEDAL SWITCH

INSPECTION

320N2−03

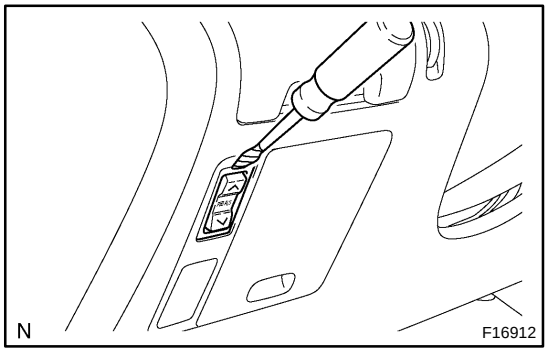

1. REMOVE ADJUSTABLE PEDAL SWITCH

(a) Using a screwdriver, remove the adjustable pedal switch, then disconnect the connector.

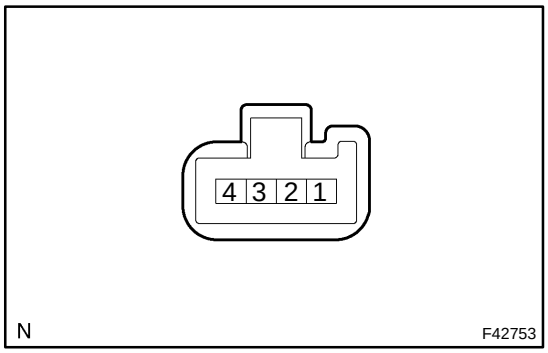

2. INSPECT ADJUSTABLE PEDAL SWITCH

Switch position	Tester connection	Specified condition
OFF	1 − 2 − 3	Continuity
FRONT	1 − 3	Continuity
	2 − 4	
REAR	1 − 2	Continuity
	3 − 4	

3. INSTALL ADJUSTABLE PEDAL SWITCH

(a) Connect the connector.

(b) Install the adjustable pedal switch.

ADJUSTABLE PEDAL RELAY

INSPECTION

320N3−03

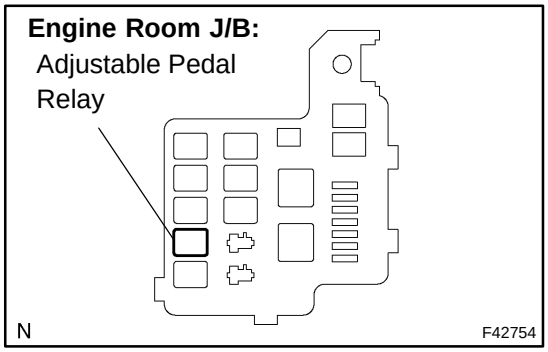

1. REMOVE ADJUSTABLE PEDAL RELAY

(a) Remove the adjustable pedal relay from the engine room J/B.

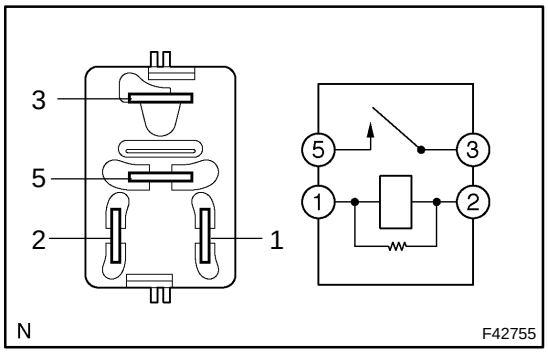

2. INSPECT ADJUSTABLE PEDAL RELAY

Condition	Tester condition	Specified condition
Constant	1 − 2	Continuity
	3 − 5	No continuity
Apply +B between terminals 1 and 2	3 − 5	continuity

3. INSTALL ADJUSTABLE PEDAL RELAY

(a) Install the adjustable pedal relay to the engine room J/B.

PARKING BRAKE SYSTEM

PROBLEM SYMPTOMS TABLE

3304S−02

Use the table below to help you find the cause of the problem. The numbers indicate the priority of the likely cause of the problem. Check each part in order. If necessary, replace these parts.

Symptom	Suspect Area	See page
Brake drag	1. Parking brake pedal or lever travel (Out of adjustment)	33−2
	2. Parking brake wire (Sticking)	33−10 33−14 33−17
	3. Parking brake shoe clearance (Out of adjustment)	33−19
	4. Parking brake shoe lining (Cracked or distorted)	33−19
	5. Tension or return spring (Damaged)	33−19

3304T−02

ADJUSTMENT

1. REMOVE REAR WHEEL

2. ADJUST PARKING BRAKE SHOE CLEARANCE(See page 33−19)

3. INSTALL REAR WHEEL

Torque: 103 N·m (1,050 kgf·cm, 76 ft·lbf)

4. INSPECT PARKING BRAKE PEDAL TRAVEL (PEDAL TYPE PARKING BRAKE)

(a) Slowly depress the parking brake pedal all the way, and count the number of clicks.

Parking brake pedal travel: 3 − 6 clicks at 300 N (31 kgf, 68.3 lbf)

5. INSPECT PARKING BRAKE LEVER TRAVEL (LEVER TYPE PARKING BRAKE)

(a) Pull the parking brake lever all the way up, and count the number of clicks.

Parking brake lever travel: 6 − 9 clicks at 200 N (20 kgf, 44.1 lbf)

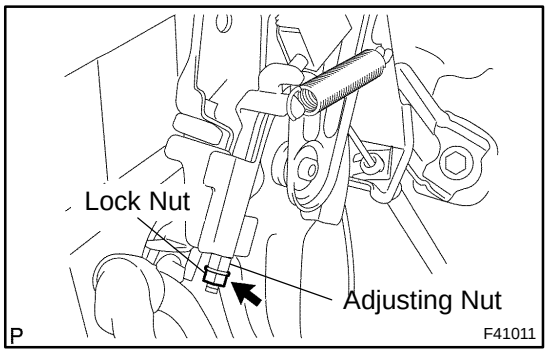

6. ADJUST PARKING BRAKE PEDAL TRAVEL (PEDAL TYPE PARKING BRAKE)

(a) Depress the parking brake pedal 3 notches to make a room for the procedure, and loosen the lock nut.

(b) Return the parking brake pedal to the original position.

(c) Turn the adjusting nut until the parking brake pedal travel is correct.

(d) Depress the parking brake pedal 3 notches to make a room for the procedure, and tighten the lock nut.

Torque: 5.4 N·m (55 kgf·cm, 48 in.·lbf)

(e) Return the parking brake pedal to the original position.

(f) Check whether parking brake drags or not.

(g) When operating the parking brake pedal, check that the parking brake pedal indicator light lights up.

7. ADJUST PARKING BRAKE LEVER TRAVEL (LEVER TYPE PARKING BRAKE)

(a) Remove the console panel upper.

(b) Remove the air duct rear No. 1.

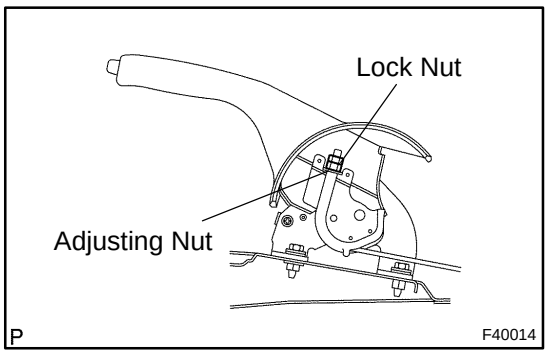

(c) Loosen the lock nut and turn the adjusting nut until the lever travel is correct.

(d) Tighten the lock nut.

Torque: 5.0 N·m (51 kgf·cm, 44 in.·lbf)

(e) Install the air duct rear No.1.

(f) Install the console panel upper.

PARKING BRAKE (From August, 2002)

3304Z−02

COMPONENTS

Parking Brake Lever Sub−assy:

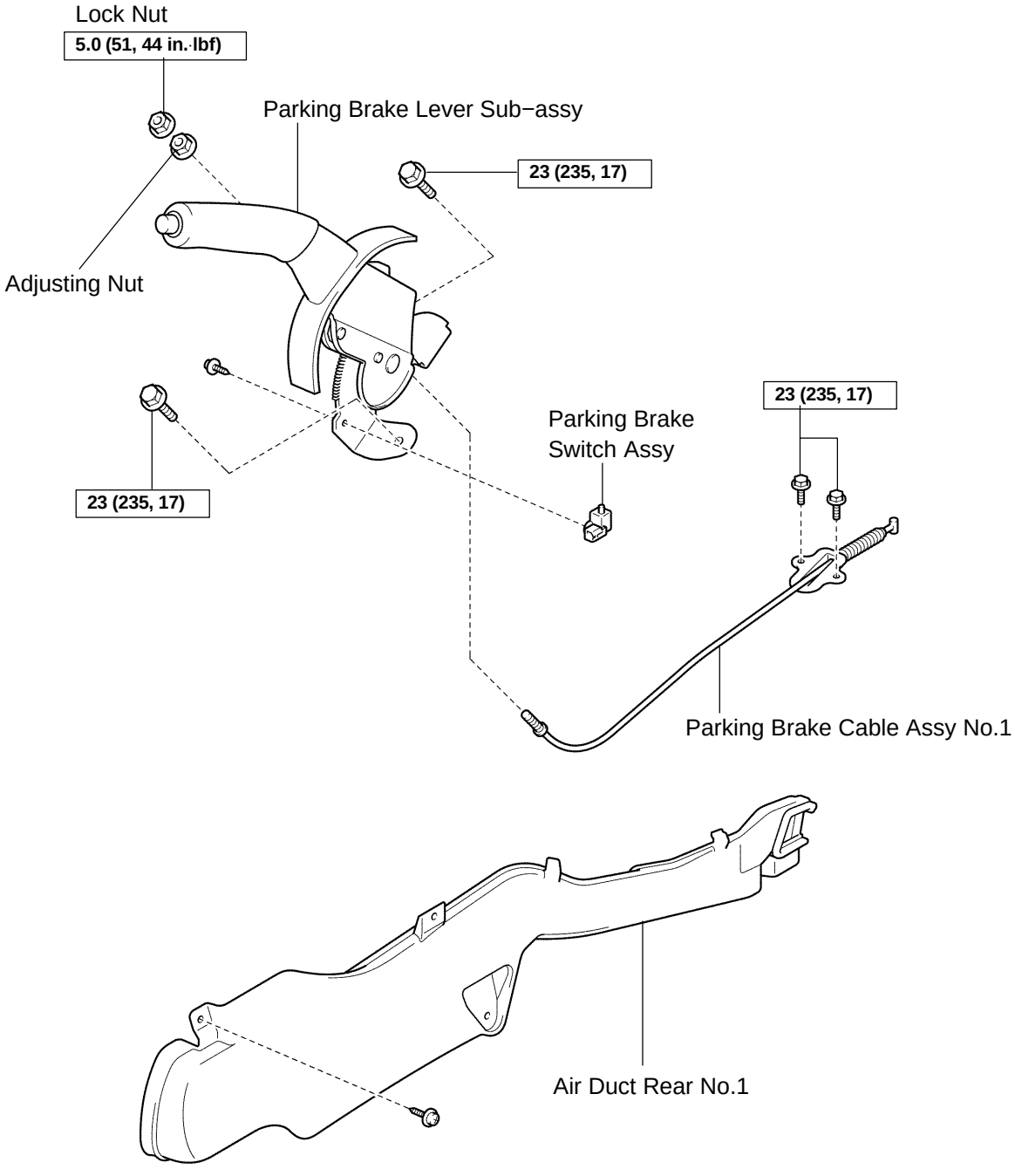

N·m (kgf·cm, ft·lbf) : Specified torque

P

F41002

Parking Brake Control Pedal Assy:

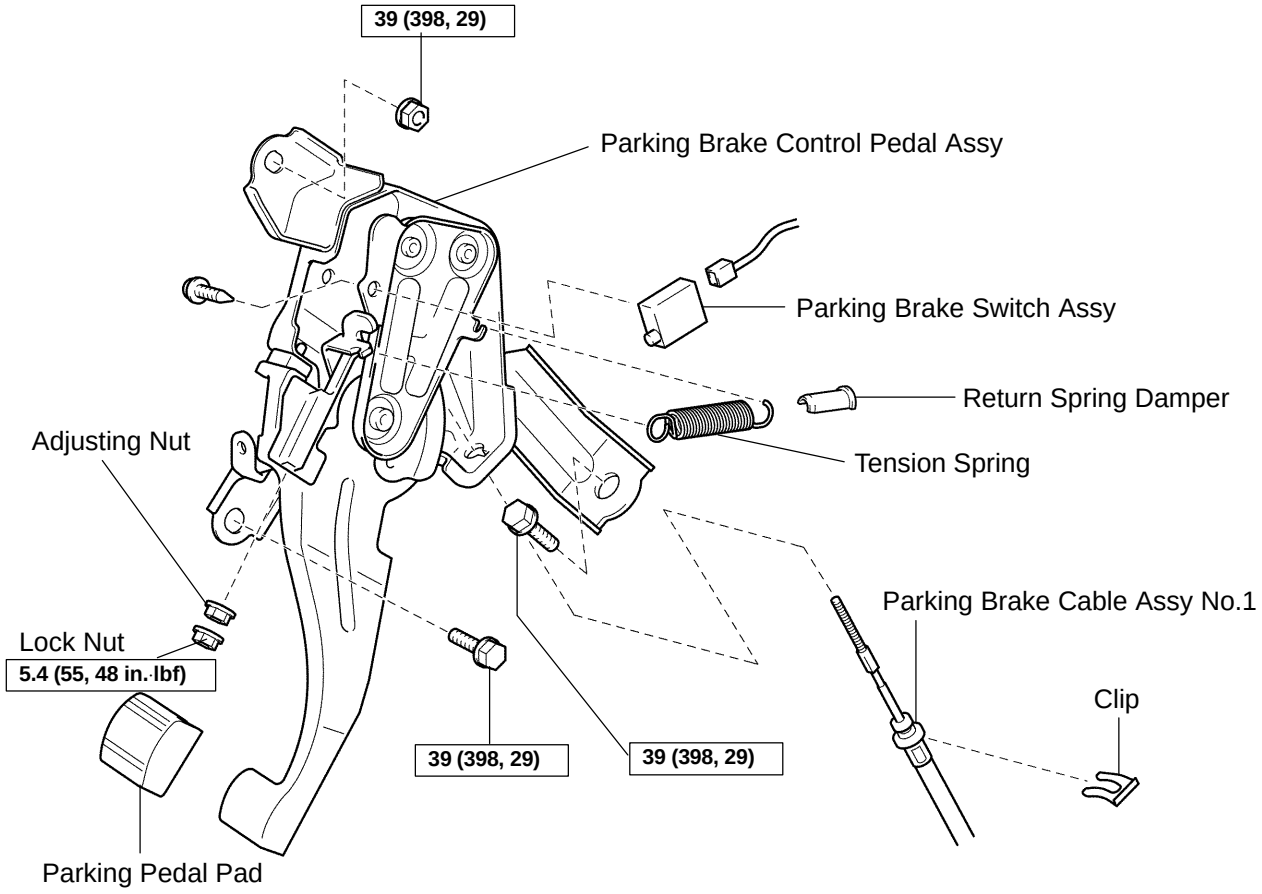

P 39 (398, 29) N·m (kgf·cm, ft·lbf) : Specified torque

F41008

Parking Brake Cable:

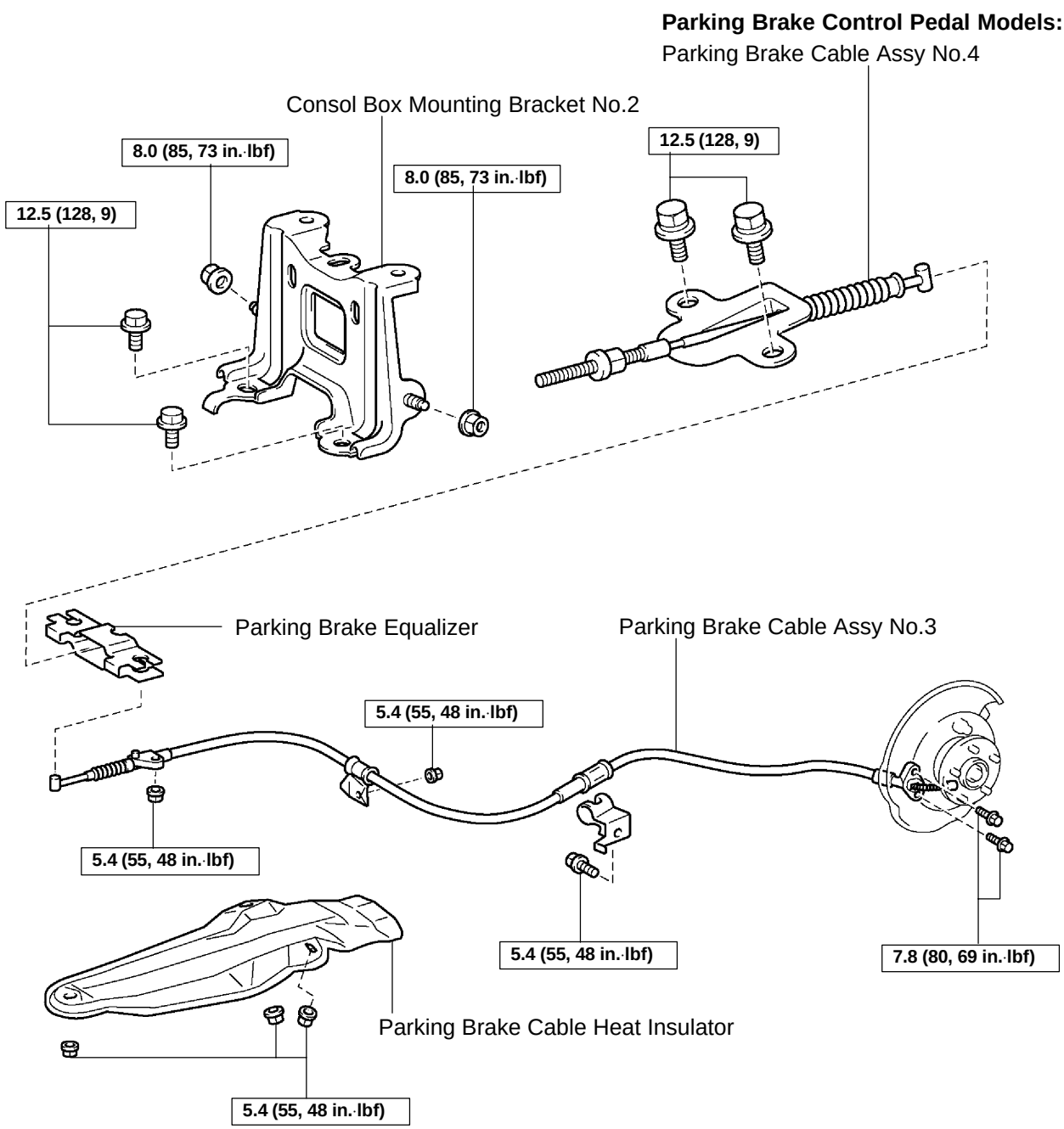

N·m (kgf·cm, ft·lbf) : Specified torque

C90467 F41686

Parking Brake Assy:

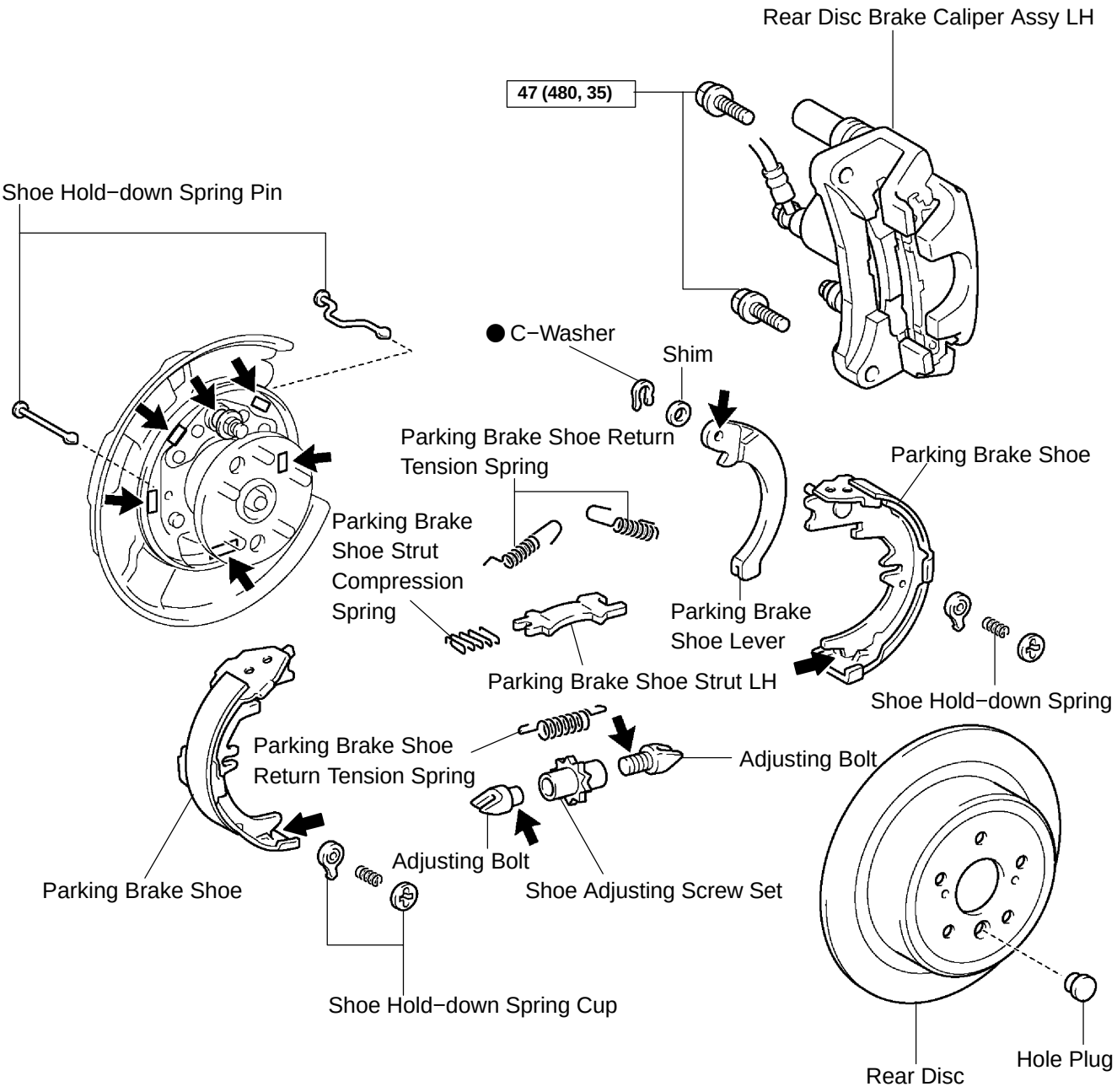

N·m (kgf·cm, ft·lbf) : Specified torque
● Non−reusable part
⬅ High Temperature grease

C90458 F41967

PARKING BRAKE LEVER SUB−ASSY (From August, 2002)

3304U−05

REPLACEMENT

HINT:

COMPONENTS: See page 33−3 and 71−9

1. REMOVE CONSOLE PANEL UPPER(See page 71−16)

2. REMOVE AIR DUCT REAR NO.1(See page 71−16)

3. REMOVE PARKING BRAKE LEVER SUB−ASSY

(a) Disconnect the parking brake switch connector.

(b) Remove the lock nut and adjusting nut.

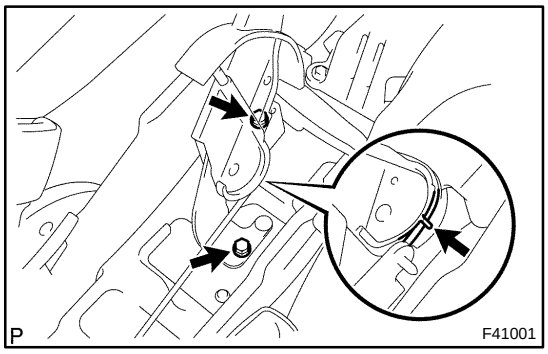

(c) Remove the 2 bolts.

(d) Using a screwdriver, disconnect the parking brake cable No. 1 and remove the parking brake lever sub−assy.

4. REMOVE PARKING BRAKE SWITCH ASSY

(a) Remove the screw and parking brake switch assy.

5. INSTALL PARKING BRAKE SWITCH ASSY

(a) Install the parking brake switch assy with the screw.

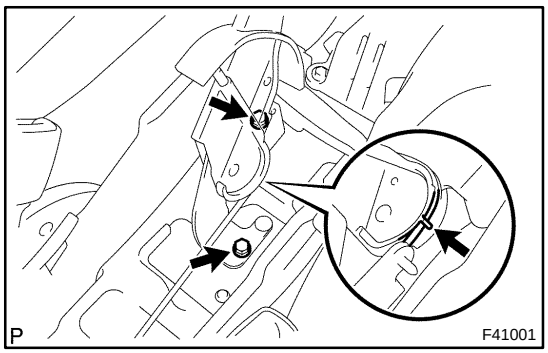

6. INSTALL PARKING BRAKE LEVER SUB−ASSY

(a) Connect the parking brake cable to the lever and install the adjusting nut and lock nut.

(b) Install the paking brake lever sub−assy with the 2 bolts.
Torque: 23 N·m (235 kgf·cm, 17 ft·lbf)

(c) Connect the parking brake switch connector.

7. INSTALL AIR DUCT REAR NO.1(See page 71−16)

8. INSTALL CONSOLE PANEL UPPER(See page 71−16)

9. CHECK PARKING BRAKE LEVER TRAVEL(See page 33−2)

10. ADJUST PARKING BRAKE LEVER TRAVEL(See page 33−2)

PARKING BRAKE CONTROL PEDAL ASSY

3304V−03

OVERHAUL

HINT:

COMPONENTS: See page 33−3 and 71−9

1. **REMOVE INSTRUMENT CLUSTER FINISH PANEL(See page 71−16)**
2. **REMOVE COMBINATION METER ASSY(See page 71−16)**
3. **REMOVE FRONT DOOR SCUFF PLATE LH(See page 71−16)**
4. **REMOVE COWL SIDE TRIM SUB−ASSY LH(See page 71−16)**
5. **REMOVE INSTRUMENT PANEL SUB−ASSY UPPER(See page 71−16)**
6. **REMOVE INSTRUMENT PNL INSERT SUB−ASSY LWR LH(See page 71−16)**

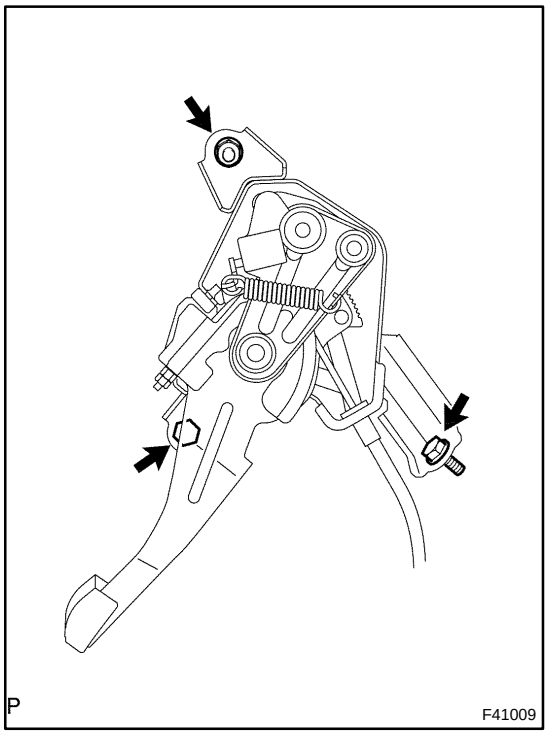

7. **REMOVE PARKING BRAKE CONTROL PEDAL ASSY**

(a) Disconnect the parking brake switch connector.

(b) Remove the 2 bolts, nut and parking brake control pedal assy.

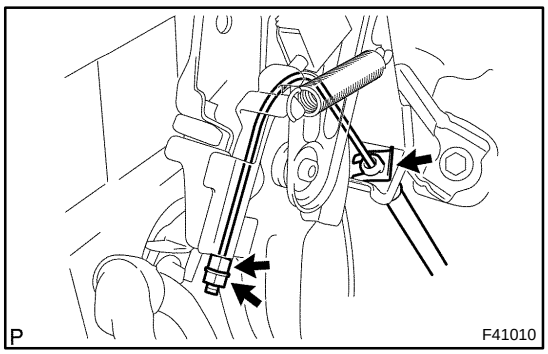

8. **REMOVE PARKING BRAKE CABLE ASSY NO.1**

(a) Remove the lock nut, adjusting nut, clip and parking brake assy No. 1.

9. **REMOVE PARKING BRAKE SWITCH ASSY**

(a) Remove the screw and parking brake switch assy.

10. **REMOVE TENSION SPRING**
11. **REMOVE RETURN SPRING DAMPER**
12. **REMOVE PARKING PEDAL PAD**

13. INSTALL PARKING PEDAL PAD

14. INSTALL RETURN SPRING DAMPER

15. INSTALL TENSION SPRING

16. INSTALL PARKING BRAKE SWITCH ASSY

(a) Install the parking brake switch assy with the screw.

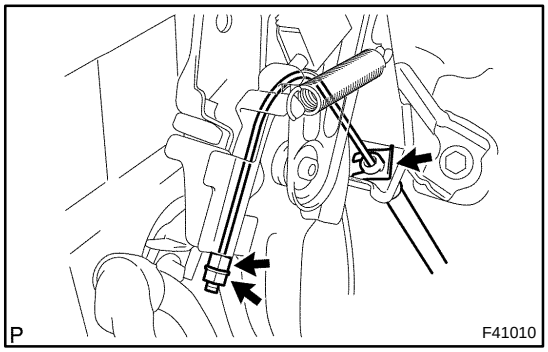

17. INSTALL PARKING BRAKE CABLE ASSY NO.1

(a) Install the parking brake cable assy No.1 with the clip, adjusting nut and lock nut.

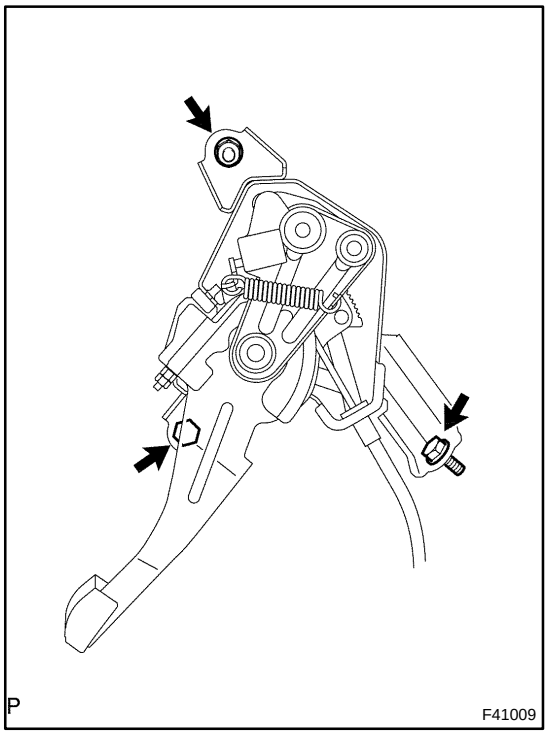

18. INSTALL PARKING BRAKE CONTROL PEDAL ASSY

(a) Install the parking brake control pedal assy with the 2 bolts and nut.

Torque: 39 N·m (398 kgf·cm, 29 ft·lbf)

(b) Connect the parking brake switch connector.

19. INSTALL INSTRUMENT PNL INSERT SUB−ASSY LWR LH(See page 71−16)

20. INSTALL INSTRUMENT PANEL SUB−ASSY UPPER(See page 71−16)

21. INSTALL COWL SIDE TRIM SUB−ASSY LH(See page 71−16)

22. INSTALL FRONT DOOR SCUFF PLATE LH(See page 71−16)

23. INSTALL COMBINATION METER ASSY(See page 71−16)

24. INSTALL INSTRUMENT CLUSTER FINISH PANEL(See page 71−16)

25. INSPECT AND ADJUST PARKING BRAKE PEDAL TRAVEL(See page 33−2)

PARKING BRAKE CABLE ASSY NO.1 (From August, 2002)

3304W−03

REPLACEMENT

HINT:

COMPONENTS: See page 33−3 and 71−9

1. **REMOVE FRONT DOOR SCUFF PLATE LH (PEDAL TYPE PARKING BRAKE)(See page 71−16)**
2. **REMOVE COWL SIDE TRIM SUB−ASSY LH (PEDAL TYPE PARKING BRAKE)(See page 71−16)**
3. **REMOVE INSTRUMENT PANEL SUB−ASSY UPPER (PEDAL TYPE PARKING BRAKE)(See page 71−16)**
4. **REMOVE INSTRUMENT PNL INSERT SUB−ASSY LWR LH (PEDAL TYPE PARKING BRAKE)(See page 71−16)**
5. **REMOVE CONSOLE PANEL UPPER REAR(See page 71−16)**
6. **REMOVE CONSOLE BOX CARPET(See page 71−16)**
7. **REMOVE RR CONSOLE BOX(See page 71−16)**
8. **REMOVE INSTRUMENT PANEL ASH RECEPTACLE ASSY(See page 71−16)**
9. **REMOVE CONSOLE PANEL UPPER(See page 71−16)**
10. **REMOVE CONSOLE BOX FRONT(See page 71−16)**
11. **REMOVE AIR DUCT REAR NO.1(See page 71−16)**
12. **REMOVE AIR DUCT REAR NO.2(See page 71−16)**
13. **REMOVE CONSOLE BOX DUCT NO.1(See page 71−16)**
14. **REMOVE SHIFT LEVER SHAFT HOUSING ASSY(See page 71−16)**
15. **REMOVE YAWRATE SENSOR (W/ VSC)(See page 32−71)**

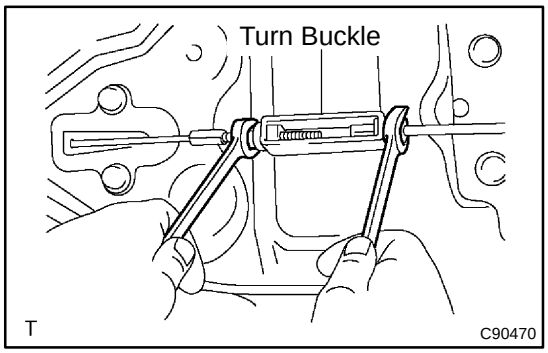

16. REMOVE PARKING BRAKE CABLE ASSY NO.1 (PEDAL TYPE PARKING BRAKE)

(a) Loosen the turn buckle, disconnect the parking brake cable assy No.1 from the parking brake cable assy No.4.

(b) Remove the 2 bolts and console box mounting bracket No.2.

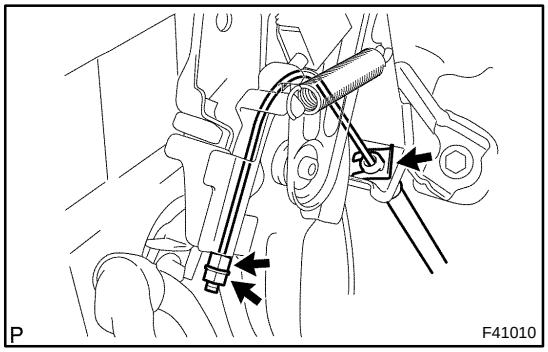

(c) Remove the lock nut, adjusting nut, clip and disconnect the parking brake cable assy No.1 from the parking brake control pedal assy.

(d) Remove the 2 nuts, 2 bolts, clip and parking brake cable assy No.1.

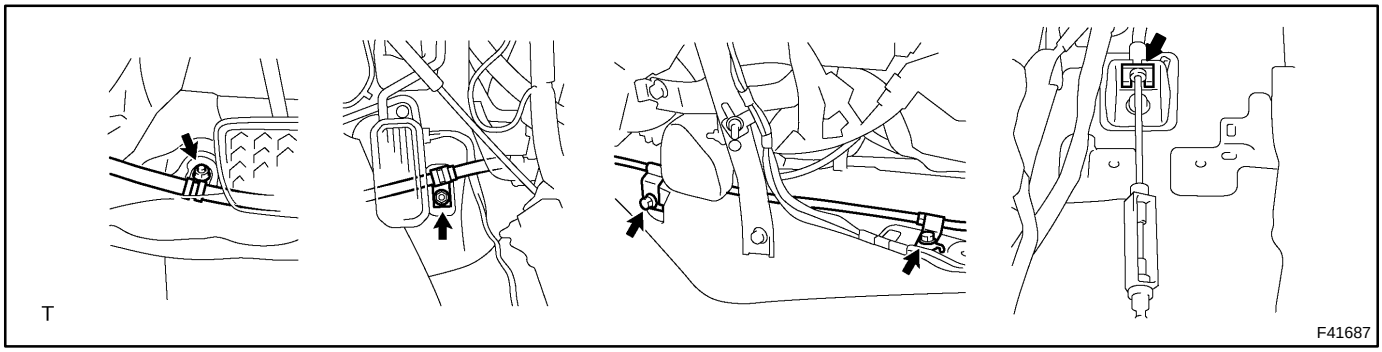

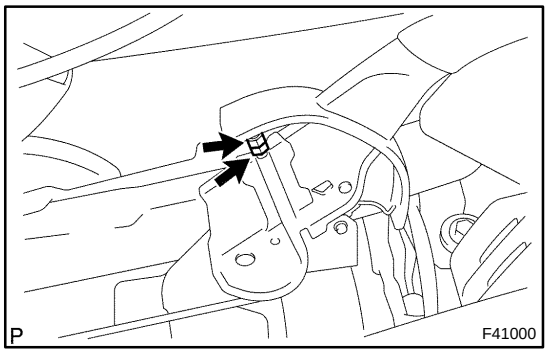

17. REMOVE PARKING BRAKE CABLE ASSY NO.1 (LEVER TYPE PARKING BRAKE)

(a) Remove the lock nut and adjusting nut from the parking brake cable assy No.1.

(b) Remove the 2 bolts and console box mounting bracket No.2.

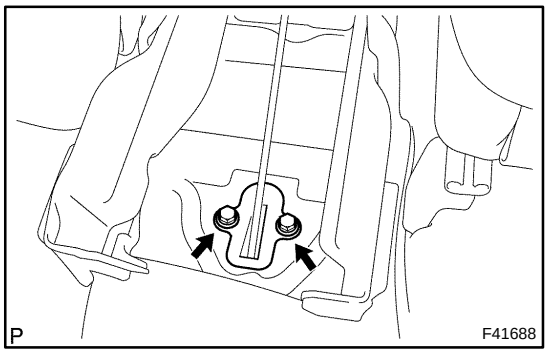

(c) Remove the 2 bolts and separate the parking brake cable No.1 from the parking brake equalizer.

18. INSTALL PARKING BRAKE CABLE ASSY NO.1 (PEDAL TYPE PARKING BRAKE)

(a) Install the parking brake cable assy No.1 with the 2 nuts, 2 bolts and clip.

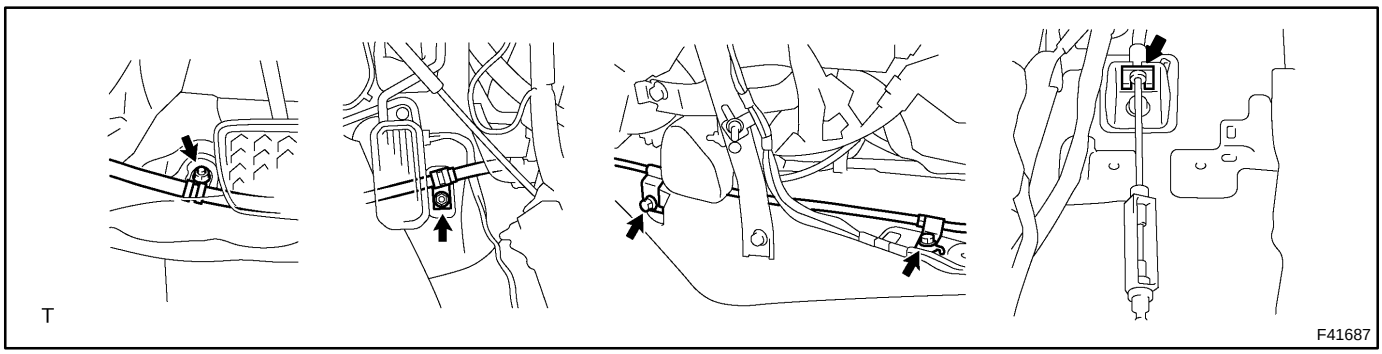

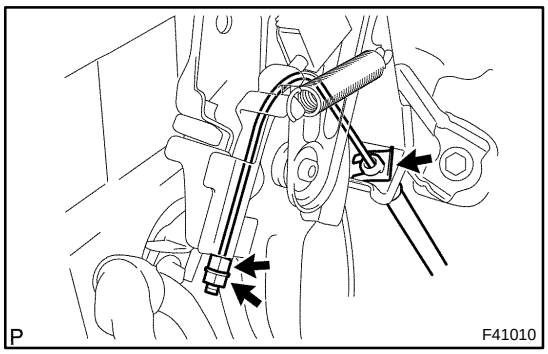

(b) Install the parking brake cable assy No.1 with the clip, adjusting nut and lock nut to the parking brake control pedal assy.
Torque: 5.4 N·m (55 kgf·cm, 48 in.·lbf)

(c) Install the console box mounting bracket No.2 with the 2 bolts.
Torque: 12.5 N·m (128 kgf·cm, 9 ft·lbf)

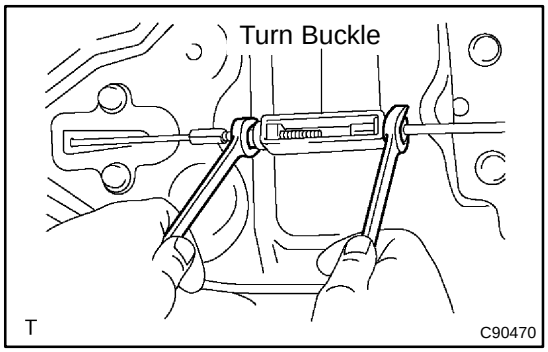

(d) Tighten the turn buckle, connect the parking brake cable assy No. 1 to the parking brake cable assy No.4.
Torque: 5.4 N·m (55 kgf·cm, 48 in.·lbf)

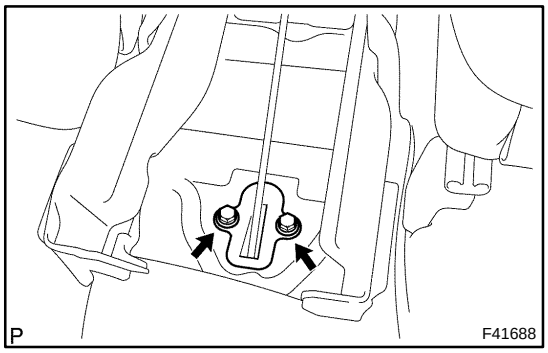

19. INSTALL PARKING BRAKE CABLE ASSY NO.1 (LEVER TYPE PARKING BRAKE)

(a) Install the parking brake cable assy No.1 with the 2 bolts to the parking brake equalizer.
Torque: 23 N·m (235 kgf·cm, 17 ft·lbf)

(b) Install the console box mounting bracket No.2 with the 2 bolts.
Torque: 12.5 N·m (128 kgf·cm, 9 ft·lbf)

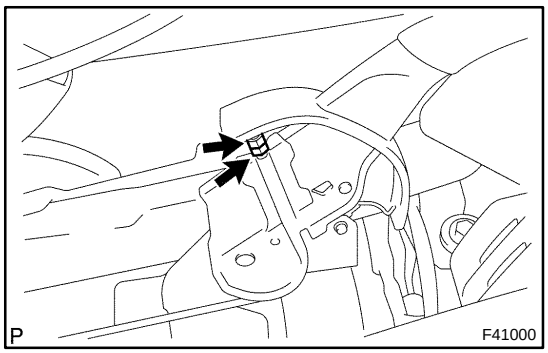

(c) Install the parking brake cable assy No.1 with the adjusting nut and lock nut to the parking brake lever assy.
Torque: 5.0 N·m (51 kgf·cm, 44 in.·lbf)

20. INSTALL YAWRATE SENSOR (W/ VSC)(See page 32−71)
21. INSTALL SHIFT LEVER SHAFT HOUSING ASSY(See page 71−16)
22. INSTALL CONSOLE BOX DUCT NO.1(See page 71−16)
23. INSTALL AIR DUCT REAR NO.2(See page 71−16)
24. INSTALL AIR DUCT REAR NO.1(See page 71−16)
25. INSTALL CONSOLE BOX FRONT(See page 71−16)
26. INSTALL CONSOLE PANEL UPPER(See page 71−16)
27. INSTALL INSTRUMENT PANEL ASH RECEPTACLE ASSY(See page 71−16)
28. INSTALL RR CONSOLE BOX(See page 71−16)
29. INSTALL CONSOLE BOX CARPET(See page 71−16)

30. INSTALL CONSOLE PANEL UPPER REAR(See page 71–16)
31. INSTALL INSTRUMENT PNL INSERT SUB–ASSY LWR LH (PEDAL TYPE PARKING BRAKE)(See page 71–16)
32. INSTALL INSTRUMENT PANEL SUB–ASSY UPPER (PEDAL TYPE PARKING BRAKE)(See page 71–16)
33. INSTALL COWL SIDE TRIM SUB–ASSY LH (PEDAL TYPE PARKING BRAKE)(See page 71–16)
34. INSTALL FRONT DOOR SCUFF PLATE LH (PEDAL TYPE PARKING BRAKE)(See page 71–16)
35. INSPECT AND ADJUST PARKING BRAKE PEDAL TRAVEL (PEDAL TYPE PARKING BRAKE)(See page 33–2)
36. INSPECT AND ADJUST PARKING BRAKE LEVER TRAVEL (LEVER TYPE PARKING BRAKE)(See page 33–2)
37. PERFORM YAWRATE SENSOR ZERO POINT CALIBRATION (W/ VSC)(See page 05–987)

PARKING BRAKE CABLE ASSY NO.3

3304X−05

REPLACEMENT

HINT:

- COMPONENTS: See page 33−3
- For parking brake cable No.2, employ the same procedure to the RH side.

1. REMOVE REAR WHEEL

2. SEPARATE REAR DISC BRAKE CALIPER ASSY LH

(a) Remove the 2 bolts and separate the rear disc brake caliper assy LH.

HINT:

Do not the flexible hose from the brake caliper assy LH.

3. REMOVE REAR BRAKE DRUM SUB−ASSY (DRUM REAR BRAKE TYPE)(See page 32−50)

4. REMOVE REAR DISC (DISC REAR BRAKE TYPE)(See page 33−19)

5. REMOVE PARKING BRAKE SHOE(See page 33−19)

6. REMOVE PARKING BRAKE CABLE HEAT INSULATOR

(a) Remove the 3 nuts and parking brake heat insulator.

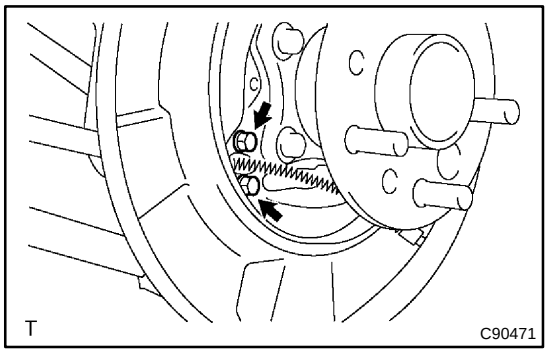

7. REMOVE PARKING BRAKE CABLE ASSY NO.3

(a) Remove the 2 bolts and disconnect the parking brake cable assy No.3 from the backing plate.

(b) Remove the 2 nuts, bolt and parking brake cable assy No.3.

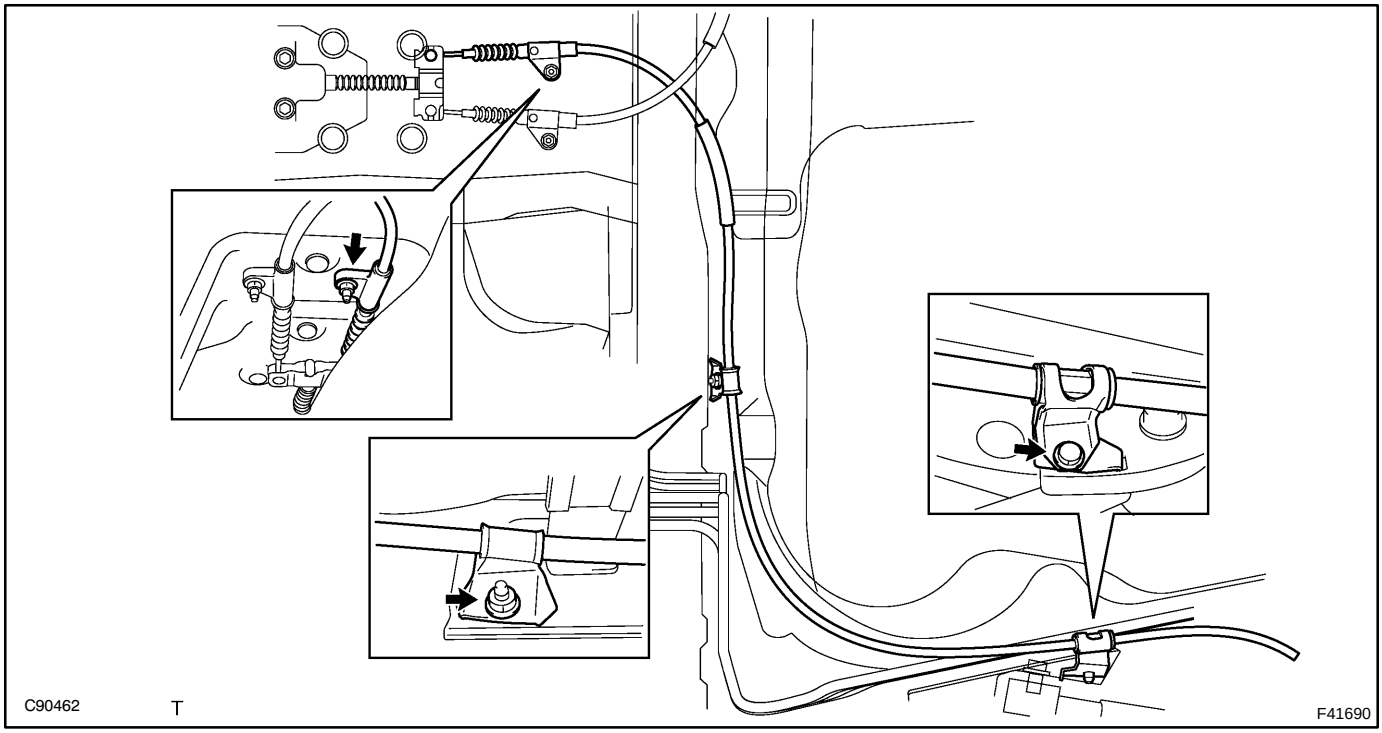

(c) Disconnect the parking brake cable assy No.3 from the parking brake equalizer.

8. INSTALL PARKING BRAKE CABLE ASSY NO.3

(a) Connect the parking brake cable assy No.3 to the parking brake equolizer.

(b) Install the parking brake cable assy No.3 with the 2 nuts and bolt.
Torque: 5.4 N·m (55 kgf·cm, 48 in.·lbf)

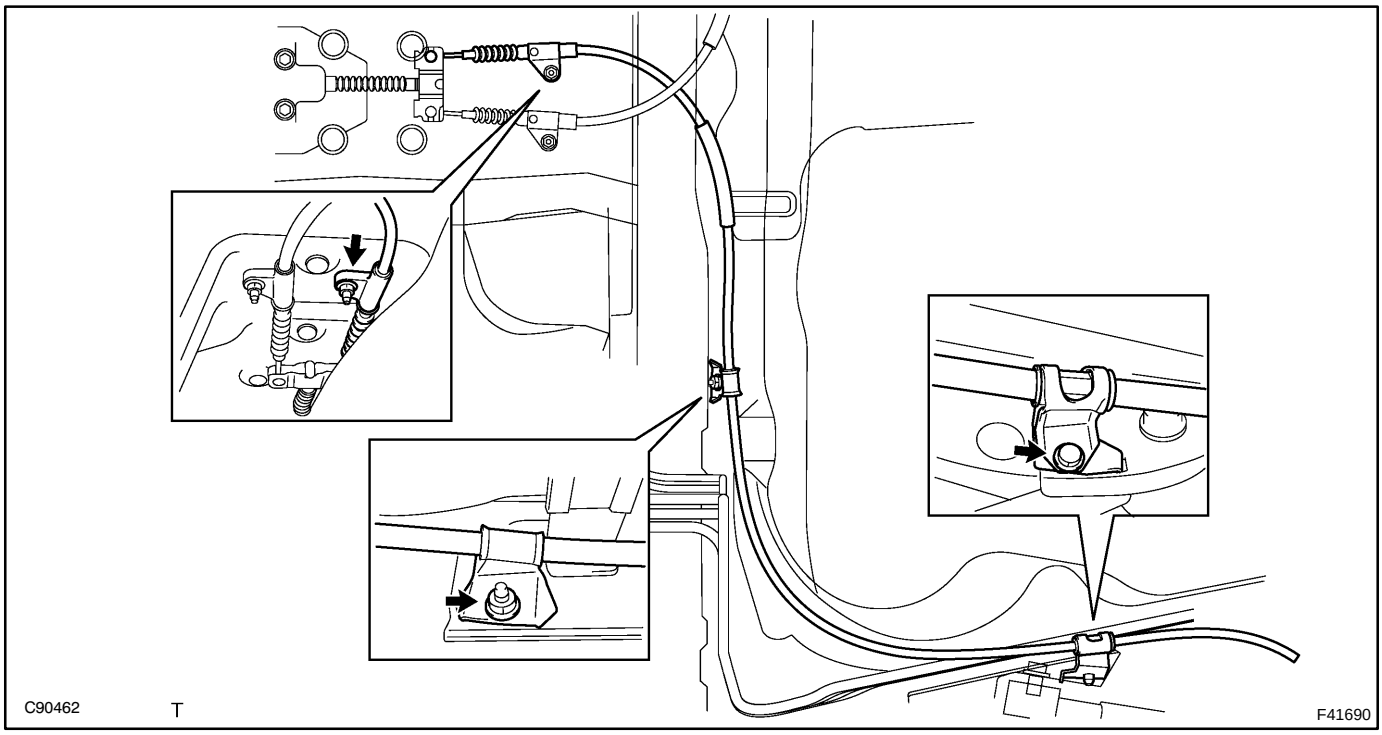

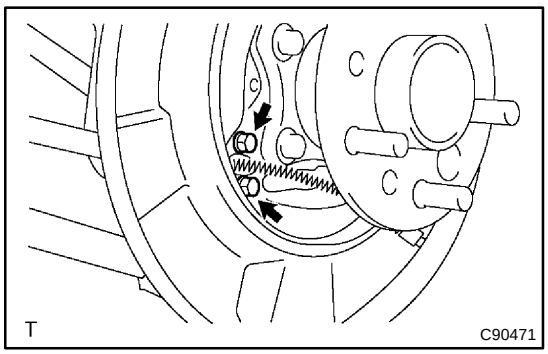

(c) Install the parking brake cable assy No.3 with the 2 bolts to the backing plate.
Torque: 7.8 N·m (80 kgf·cm, 69 in.·lbf)

9. INSTALL PARKING BRAKE CABLE HEAT INSULATOR

(a) Install the parking brake heat insulator with the 3 nuts.
Torque: 5.4 N·m (55 kgf·cm, 48 in.·lbf)

10. APPLICATION HIGH TEMPERATURE GREASE(See page 33−19)

11. INSTALL PARKING BRAKE SHOE(See page 33−19)

12. CHECK PARKING BRAKE INSTALLATION(See page 33−19)
13. INSTALL REAR BRAKE DRUM SUB−ASSY (DRUM REAR BRAKE TYPE)(See page 32−50)
14. INSTALL REAR DISC (DISC REAR BRAKE TYPE)(See page 33−19)
15. ADJUST PARKING BRAKE SHOE CLEARANCE(See page 33−19)
16. INSTALL REAR DISC BRAKE CALIPER ASSY LH
(a) Install the rear disc brake caliper with the 2 bolts.
Torque: 47 N·m (480 kgf·cm, 35 ft·lbf)
17. INSTALL REAR WHEEL
Torque: 103 N·m (1,050 kgf·cm, 76 ft·lbf)
18. INSPECT AND ADJUST PARKING BRAKE PEDAL TRAVEL (PEDAL TYPE PARKING BRAKE)(See page 33−2)
19. INSPECT AND ADJUST PARKING BRAKE LEVER TRAVEL (LEVER TYPE PARKING BRAKE)(See page 33−2)

PARKING BRAKE CABLE ASSY NO.4 (From August, 2002)

3304Y–03

REPLACEMENT

HINT:

COMPONENTS: See page 33–3

1. REMOVE CONSOLE PANEL UPPER REAR(See page 71–16)

2. REMOVE CONSOLE BOX CARPET(See page 71–16)

3. REMOVE RR CONSOLE BOX(See page 71–16)

4. REMOVE CONSOLE BOX MOUNTING BRACKET NO.2

(a) Remove the 2 bolts and console box mounting bracket No.2.

5. REMOVE YAWRATE SENSOR (W/ VSC)(See page 32–71)

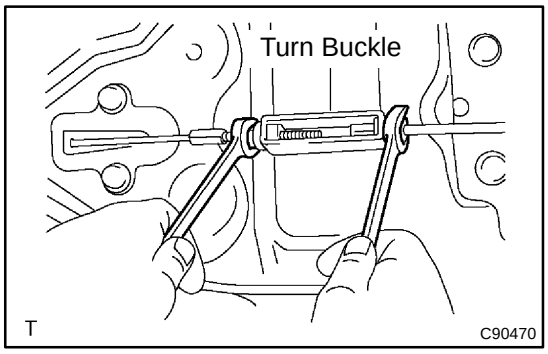

6. REMOVE PARKING BRAKE CABLE ASSY NO.4

(a) Loosen the turn buckle, disconnect the parking brake cable assy No.4 from the parking brake cable assy No.1.

(b) Disconnect the parking brake cable assy No.4 from the parking brake equolizer.

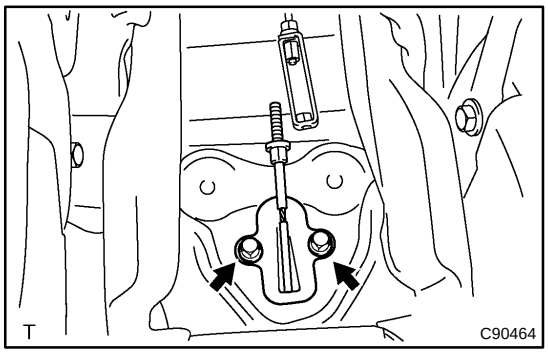

(c) Remove the 2 bolts and parking brake cable assy No.4.

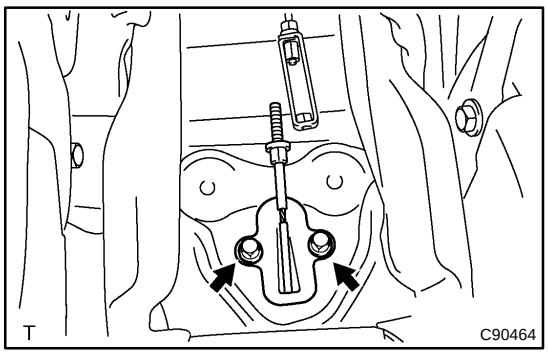

7. INSTALL PARKING BRAKE CABLE ASSY NO.4

(a) Install the parking brake cable No.4 with the 2 bolts.
Torque: 12.5 N·m (128 kgf·cm, 9 ft·lbf)

(b) Connect the parking brake cable assy No.4 to the parking brake equolizer.

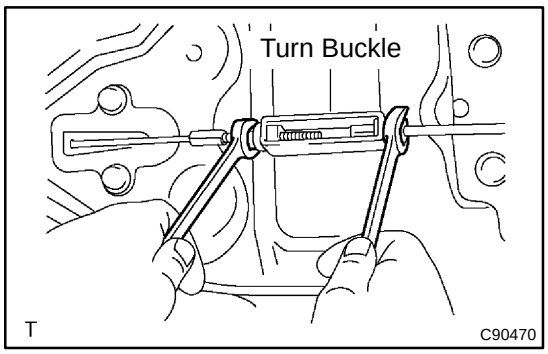

(c) Tighten the turn buckle, connect the parking brake cable assy No.4 to the parking brake cable assy No.1.
Torque: 5.4 N·m (55 kgf·cm, 48 in.·lbf)

8. INSTALL YAWRATE SENSOR (W/ VSC)(See page 32−71)
9. INSTALL CONSOLE BOX MOUNTING BRACKET NO.2
(a) Install the console box mounting bracket No.2 with the 2 bolts.
Torque: 12.5 N·m (128 kgf·cm, 9 ft·lbf)
10. INSTALL RR CONSOLE BOX(See page 71−16)
11. INSTALL CONSOLE BOX CARPET(See page 71−16)
12. INSTALL CONSOLE PANEL UPPER REAR(See page 71−16)
13. INSPECT AND ADJUST PARKING BRAKE PEDAL TRAVEL(See page 33−2)
14. PERFORM YAWRATE SENSOR ZERO POINT CALIBRATION (W/ VSC)(See page 05−987)

PARKING BRAKE ASSY

33050−02

OVERHAUL

HINT:

- COMPONENTS: See page 33−3
- Overhaul the RH side by the same procedures with LH side.

1. REMOVE REAR WHEEL

2. SEPARATE REAR DISC BRAKE CALIPER ASSY LH

(a) Remove the 2 bolts and separate the rear disc brake caliper assy LH.

HINT:

Do not disconnect the flexible hose from the brake caliper.

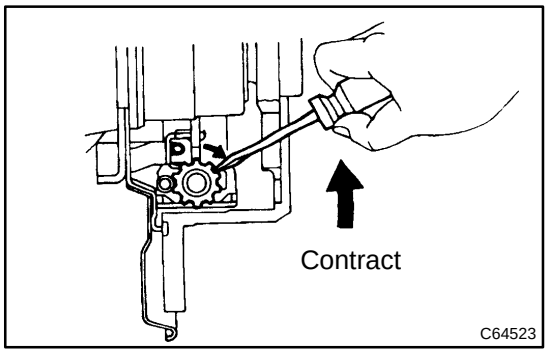

3. REMOVE REAR DISC

(a) Release the parking brake, and remove the rear disc.

HINT:

- Put matchmarks on the disc and the axle hub.
- If the disc cannot be removed easily, turn the shoe adjuster until the wheel turns freely.

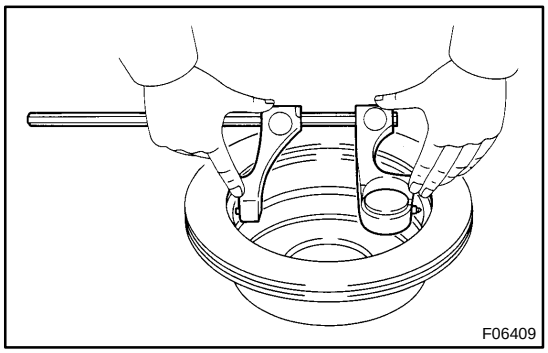

4. INSPECT BRAKE DISC INSIDE DIAMETER

(a) Using a brake drum gauge or equivalent, measure the inside diameter of the disc.

Standard inside diameter: 170 mm (6.69 in.)
Maximum inside diameter: 171 mm (6.73 in.)

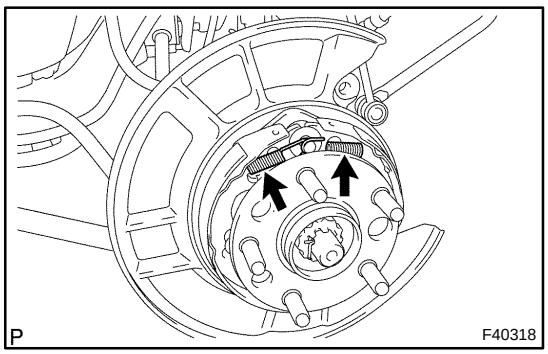

5. REMOVE PARKING BRAKE SHOE RETURN TENSION SPRING

(a) Using a needle−nose pliers, remove the 2 return tension springs.

6. REMOVE PARKING BRAKE SHOE STRUT COMPRESSION SPRING

(a) Slide out the front shoe and remove the compression spring.

7. REMOVE PARKING BRAKE SHOE STRUT LH

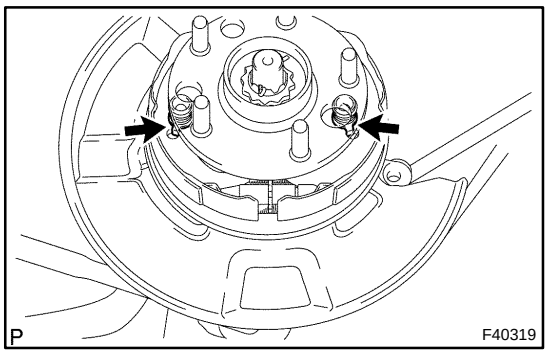

8. REMOVE PARKING BRAKE SHOE

(a) Release the cup claw and remove the front and rear parking brake shoe.
(b) Disconnect the parking brake cable from the shoe lever.
(c) Remove the tension spring and shoe adjuster screw set from the front and rear shoe.
(d) Remove the 2 shoe hold−down springs, 4 cups and 2 pins.

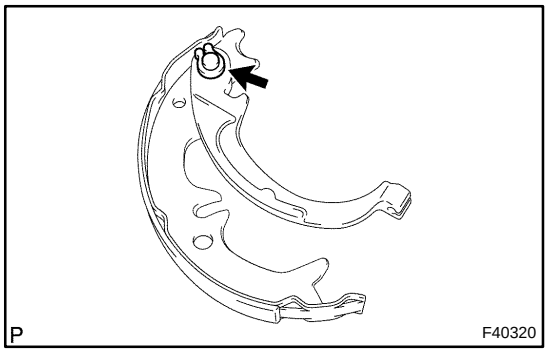

(e) Using a screwdriver, remove the C−washer.
(f) Remove the shim and shoe lever from the parking brake shoe.

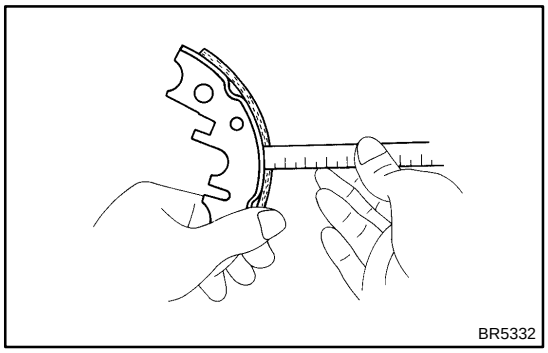

9. INSPECT PARKING BRAKE SHOE LINING THICKNESS

(a) Using a ruler, measure the thickness of the shoe lining.
Standard thickness: 2.0 mm (0.079 in.)
Minimum thickness: 1.0 mm (0.039 in.)

If the lining thickness is at the minimum thickness or less, or if there is severe, uneven wear, replace the brake shoe.

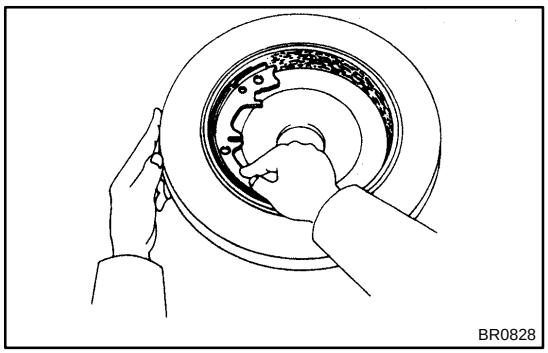

10. INSPECT BRAKE DISC AND PARKING BRAKE SHOE LINING FOR PROPER CONTACT

(a) Apply chalk to the inside surface of the disc, then grind down the brake shoe lining to fit.

If the contact between the brake disc and the shoe lining is improper, repair it using a brake shoe grinder or replace the brake shoe assembly.

11. APPLICATION HIGH TEMPERATURE GREASE

(a) Apply the high temperature grease to the shoe attached surface of backing plate.

12. INSTALL PARKING BRAKE SHOE

(a) Install the shoe lever and shim to the rear shoe with a new C−washer.

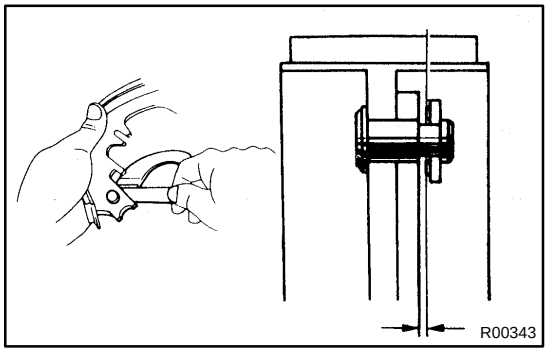

(b) Using a feeler gauge, measure the clearance.
Standard clearance: Less than 0.35 mm (0.0138 in.)

If the clearance is not within the specification, replace the shim with one of the correct size.

Shim Thickness	Shim Thickness
0.3 mm (0.012 in.)	0.9 mm (0.035 in.)
0.6 mm (0.024 in.)	−

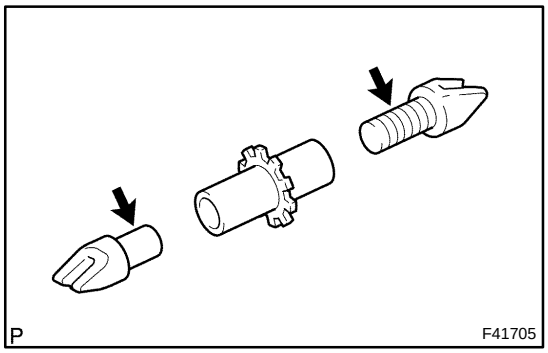

(c) Apply the high temperature grease to the adjusting bolt.
(d) Install the shoe adjusting screw set and tension spring to the front and rear shoe.
(e) Install the 2 pins, 4 cups and 2 shoe hold−down springs.
(f) Connect the parking brake cable to the shoe lever.
(g) Install the front and rear parking brake shoe.

13. INSTALL PARKING BRAKE SHOE STRUT LH

14. INSTALL PARKING BRAKE SHOE STRUT COMPRESSION SPRING

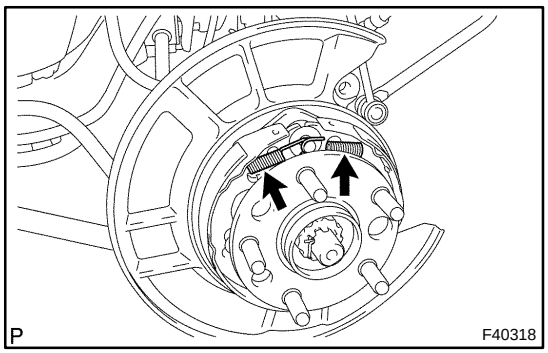

15. INSTALL PARKING BRAKE SHOE RETURN TENSION SPRING

(a) Using a needle nose pliers, install the 2 return tension springs.

16. CHECK PARKING BRAKE INSTALLATION

(a) Check that each part is installed properly.

NOTICE:

There should be no oil or grease adhering to the friction surface of the shoe lining and disc.

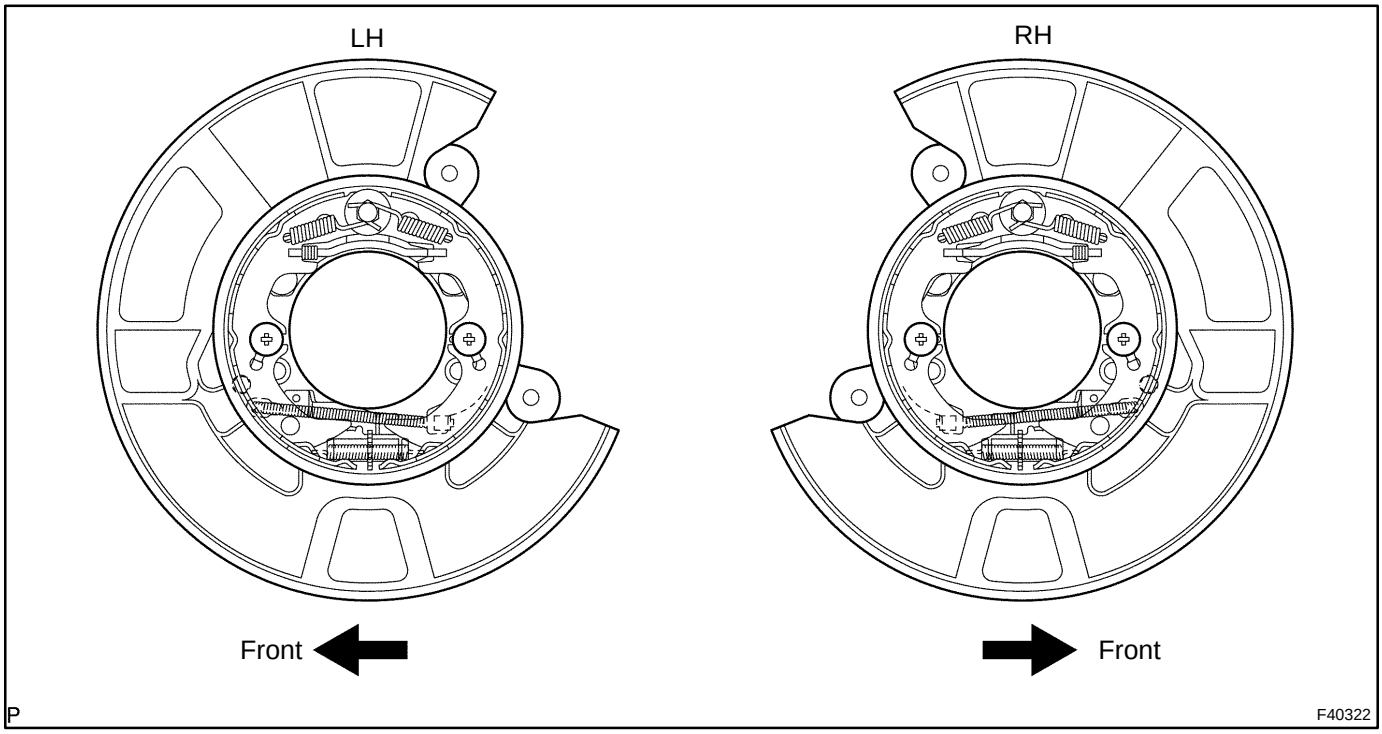

17. INSTALL REAR DISC

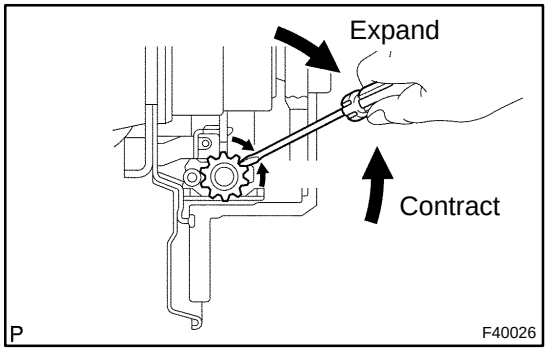

18. ADJUST PARKING BRAKE SHOE CLEARANCE

(a) Temporarily install the hub nuts.

(b) Remove the hole plug, and turn the adjuster and expand the shoes until the disc locks.

(c) Contract the shoe adjuster until the disc can rotate smoothly.

Standard : Return 8 notches

(d) Check shoe is no brake drag.

(e) Install the hole plug.

19. INSTALL REAR DISC BRAKE CALIPER ASSY LH

(a) Install the rear disc brake caliper with the 2 bolts.

Torque: 47 N·m (480 kgf·cm, 35 ft·lbf)

20. INSTALL REAR WHEEL

Torque: 103 N·m (1,050 kgf·cm, 76 ft·lbf)

21. INSPECT AND ADJUST PARKING BRAKE PEDAL TRAVEL (PEDAL TYPE PARKING BRAKE)(See page 33−2)

22. INSPECT AND ADJUST PARKING BRAKE LEVER TRAVEL (LEVER TYPE PARKING BRAKE) (See page 33−2)

AUTOMATIC TRANSAXLE ASSY (ATM)

4005T−07

PRECAUTION

1. The automatic transaxle is composed of highly precision−finished parts which need careful inspection before reassembly because even a small nick could cause fluid leakage or affect the performance. The instructions here are organized in order to work on only one component group at a time. This will help avoid confusion which comes from similar−looking parts of different sub−assemblies being on your workbench at the same time. Inspect and repair the component groups from the converter housing side. Complete the inspection, repair and reassembly before proceeding to the next component group. If a defect is found in a certain component group during reassembly, inspect and repair this group immediately. If a component group cannot be assembled because the necessary parts are being ordered, be sure to keep all the parts of the group in a separate container while proceeding with disassembly, inspection, repair and reassembly of the other component groups.
   Recommended ATF: T−IV
2. All the disassembled parts should be washed clean and any fluid passages and holes should be blown through with compressed air.
3. Dry all parts with compressed air. Never use shop rags to dry them.
4. Be careful of ATF or kerosene not to be sprayed over your face when using compressed air.
5. The recommended automatic transaxle fluid or kerosene should be used for cleaning.
6. After cleaning, the parts should be arranged in the correct order for efficient inspection, repair, and reassembly.
7. When disassembling the valve body, be sure to match each valve together with the corresponding spring.
8. New discs for the replacement of the brakes and clutches must be soaked in ATF for at least 15 minutes before reassembly.
9. All the oil seal rings, clutch discs, clutch plates, rotating parts, and sliding surfaces should be coated with ATF prior to reassembly.
10. Replace all the gaskets and rubber O−rings.
11. Do not apply adhesive cements to the gaskets and similar parts.
12. Make sure that the ends of the snap ring are not aligned with one of the cutouts and are installed in the groove correctly.
13. If a worn bushing is to be replaced, the sub−assembly containing the bushing must also be replaced.
14. Check the thrust bearings and races for wear or damage. Replace them as necessary.
15. Use petroleum jelly to keep the parts in place.
16. When working with FIPG material, you must follow the procedure below.

- Remove all the old packing (FIPG) material from the gasket surface using a razor blade and a gasket scraper.
- Thoroughly clean all the components to remove all the loose material.
- Clean both the sealing surfaces with non−residue solvent.
- Parts must be reassembled within 10 minutes of application. Otherwise, the packing (FIPG) material must be removed and reapplied.

AUTOMATIC TRANSAXLE FLUID (ATM)

4005R−10

ON−VEHICLE INSPECTION

1. CHECK FLUID LEVEL

HINT:

Drive the vehicle so that the engine and transaxle are at the normal operating temperature.

Fluid temperature: 70 to 80 ●C (158 to 176 ●F)

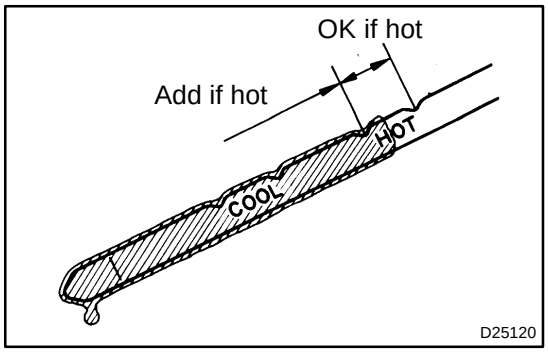

(a) Park the vehicle on a level surface and set the parking brake.
(b) With the engine idling and the brake pedal depressed, shift the lever into all positions from the P to the L position, and return to the P position.
(c) Pull out the dipstick and wipe it clean.
(d) Push it back fully into the pipe.
(e) Pull it out and check that the fluid level is within the HOT range.

If there are leaks, it is necessary to repair or replace O−rings, FIPGs, oil seals, plugs or other parts.

PARK/NEUTRAL POSITION SWITCH ASSY (ATM)

401EH−01

REPLACEMENT

1. **REMOVE BATTERY**
2. **REMOVE ENGINE COVER SUB−ASSY NO.1 (SEE PAGE 14−29) or (SEE PAGE 14−164)**
3. **REMOVE AIR CLEANER ASSY (SEE PAGE 14−29) or (SEE PAGE 14−164)**
4. **REMOVE AIR CLEANER HOSE NO.1 (SEE PAGE 14−29) or (SEE PAGE 14−164)**
5. **REMOVE INTAKE AIR RESONATOR SUB−ASSY (SEE PAGE 14−29) or (SEE PAGE 14−164)**
6. **REMOVE ENGINE UNDER COVER LH**

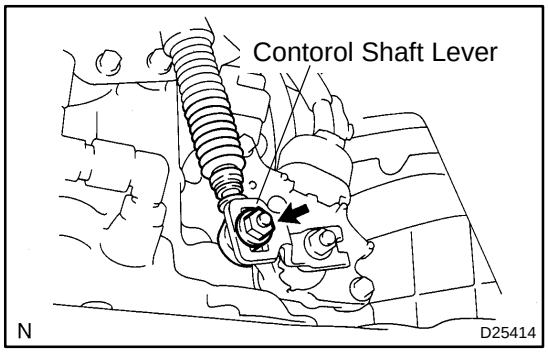

7. **DISCONNECT TRANSMISSION CONTROL CABLE ASSY**

(a) Remove the nut from the control shaft lever.

(b) Disconnect the control cable from the control shaft lever.

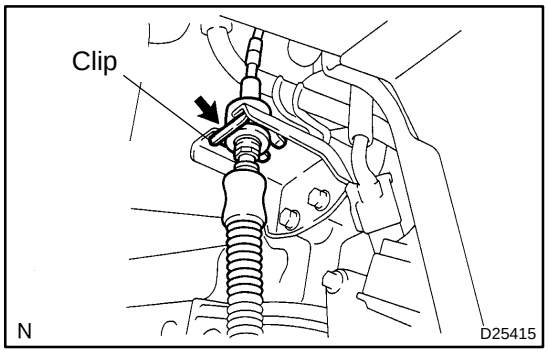

(c) Remove the clip and disconnect the control cable from the control cable bracket.

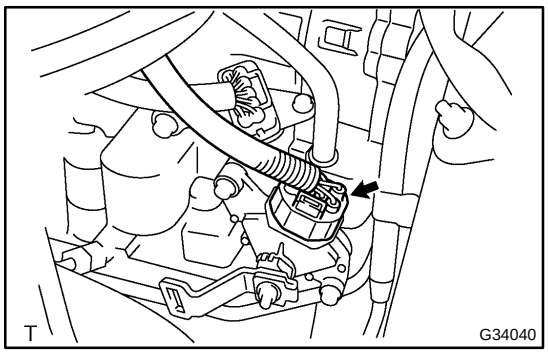

8. **REMOVE PARK/NEUTRAL POSITION SWITCH ASSY**

(a) Disconnect the park/neutral position switch connector.

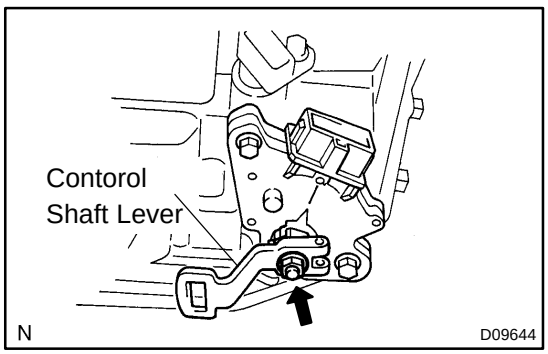

(b) Remove the nut, washer and control shaft lever.

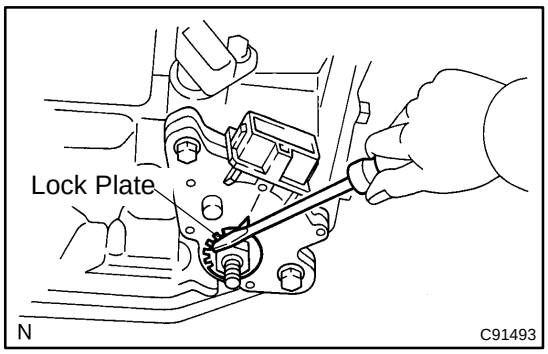

(c) Pry out the lock plate.

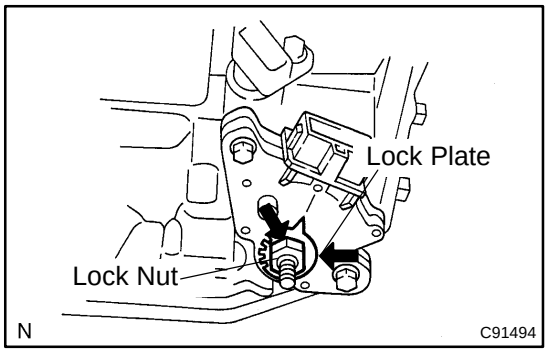

(d) Remove the lock nut and lock plate.

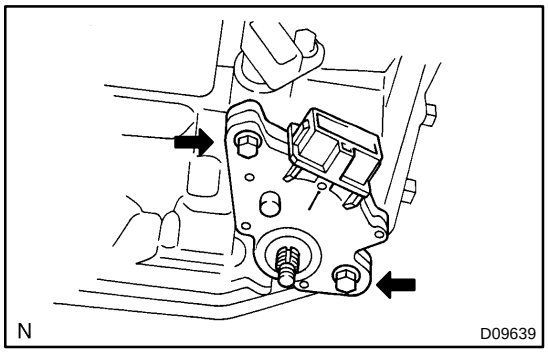

(e) Remove the 2 bolts and pull out the park/neutral position switch.

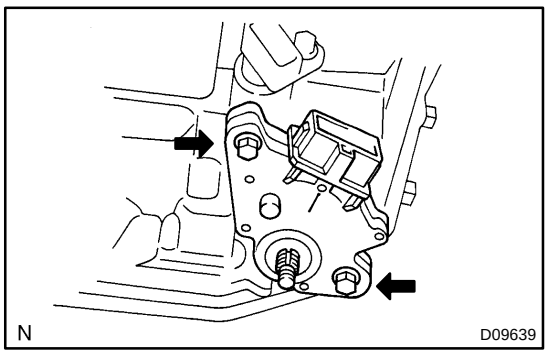

9. INSTALL PARK/NEUTRAL POSITION SWITCH ASSY

(a) Install the park/neutral position switch to the manual valve shaft.

(b) Temporarily install the 2 bolts.

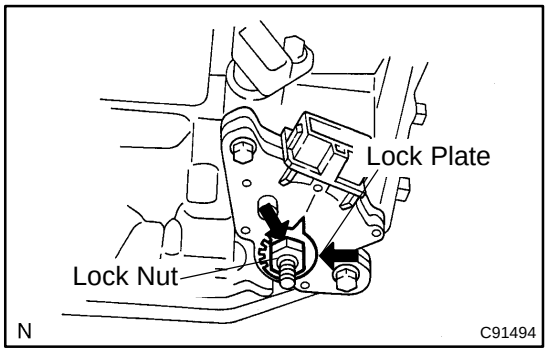

(c) Place a new lock plate and tighten the nut.
Torque: 6.9 N·m (70 kgf·cm, 61 in.·lbf)

(d) Temporarily install the control shaft lever.

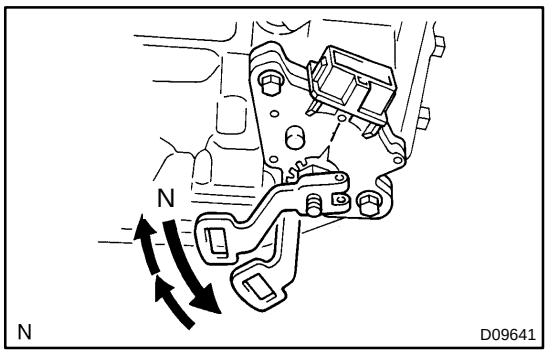

(e) Turn the lever counterclockwise until it stops, then turn it clockwise 2 notches.

(f) Remove the control shaft lever.

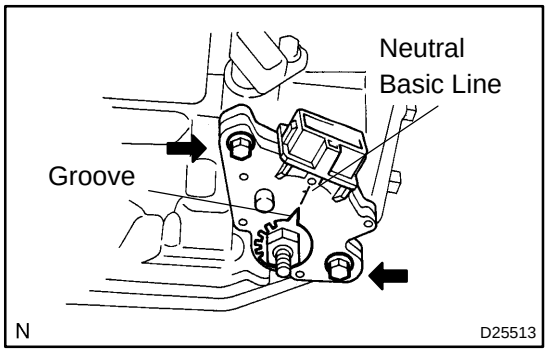

(g) Align the groove with neutral basic line.

(h) Hold the switch in position and tighten the 2 bolts.
Torque: 5.4 N·m (55 kgf·cm, 48 in.·lbf)

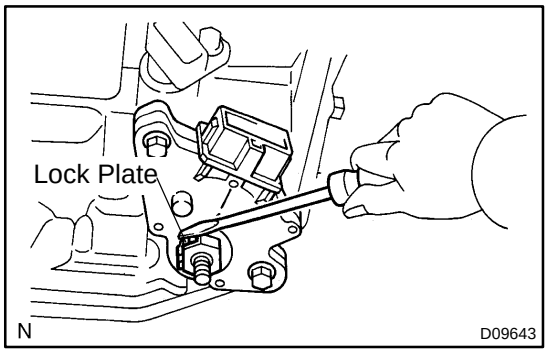

(i) Using a screwdriver, stake the nut with the lock plate.

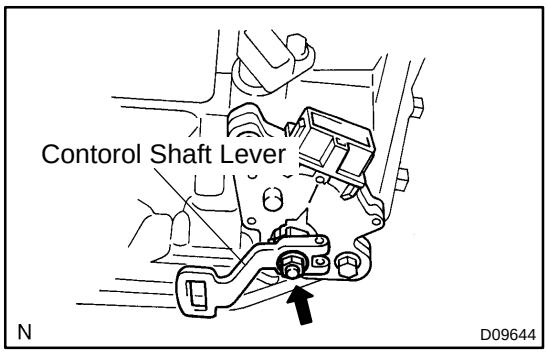

(j) Install the control shaft lever, washer and nut.
Torque: 12.7 N·m (130 kgf·cm, 9 ft·lbf)

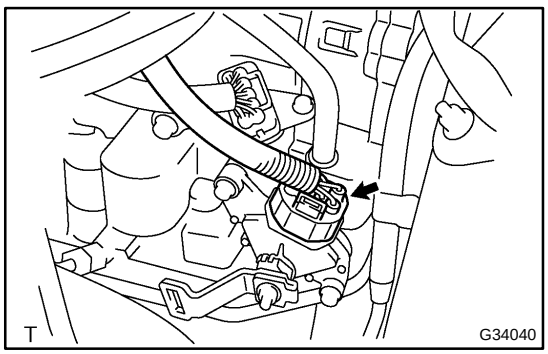

(k) Connect the park/neutral position switch connector.

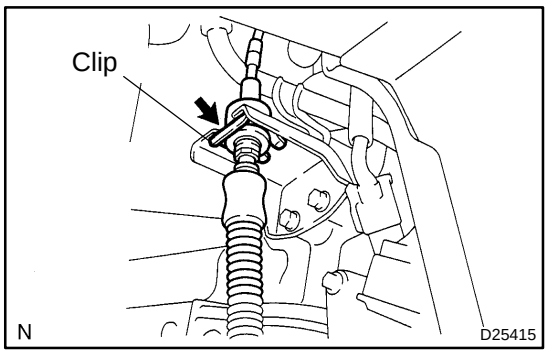

10. INSTALL TRANSMISSION CONTROL CABLE ASSY

(a) Install the control cable and a new clip to the bracket.

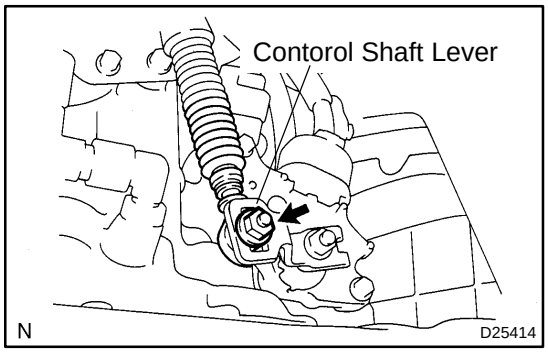

(b) Temporarily install the control cable to the control shaft lever with the nut.

11. ADJUST SHIFT LEVER POSITION (SEE PAGE 40−64)
12. INSPECT SHIFT LEVER POSITION (SEE PAGE 40−64)
13. INSPECT PARK/NEUTRAL POSITION SWITCH ASSY (SEE PAGE 40−7)
14. INSTALL ENGINE UNDER COVER LH
15. INSTALL INTAKE AIR RESONATOR SUB−ASSY (SEE PAGE 14−29) or (SEE PAGE 14−164)
16. INSTALL AIR CLEANER HOSE NO.1 (SEE PAGE 14−29) or (SEE PAGE 14−164)
17. INSTALL AIR CLEANER ASSY (SEE PAGE 14−29) or (SEE PAGE 14−164)
18. INSTALL ENGINE COVER SUB−ASSY NO.1 (SEE PAGE 14−29) or (SEE PAGE 14−164)
19. INSTALL BATTERY

4005Z−12

ADJUSTMENT

1. INSPECT PARK/NEUTRAL POSITION SWITCH ASSY

(a) Apply the parking brake and turn the ignition switch to ON.

(b) Depress the brake pedal and check that the engine starts only when the shift lever is set in N or P position.

(c) Check that the back−up light is lit and the reverse warning buzzer sounds only when the shift lever is set in R position.

If a failure is found, check the park/neutral position switch for continuity.

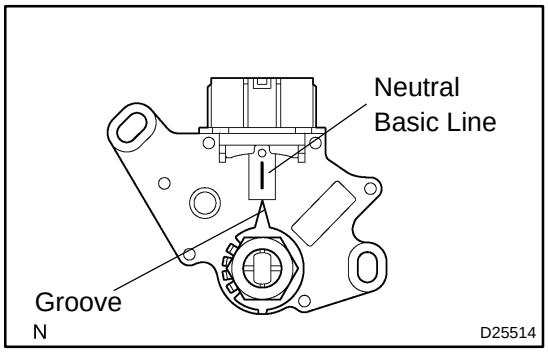

2. ADJUST PARK/NEUTRAL POSITION SWITCH ASSY

(a) Loosen the 2 bolts of park/neutral position switch and set the shift lever to the N position.

(b) Align the groove with neutral basic line.

(c) Hold the switch in position and tighten the 2 bolts.
Torque: 5.4 N·m (55 kgf·cm, 48 in.·lbf)

(d) After adjustment, perform the inspection described in step 1.

AUTOMATIC TRANSAXLE ASSY (U151E)

COMPONENTS

40157−03

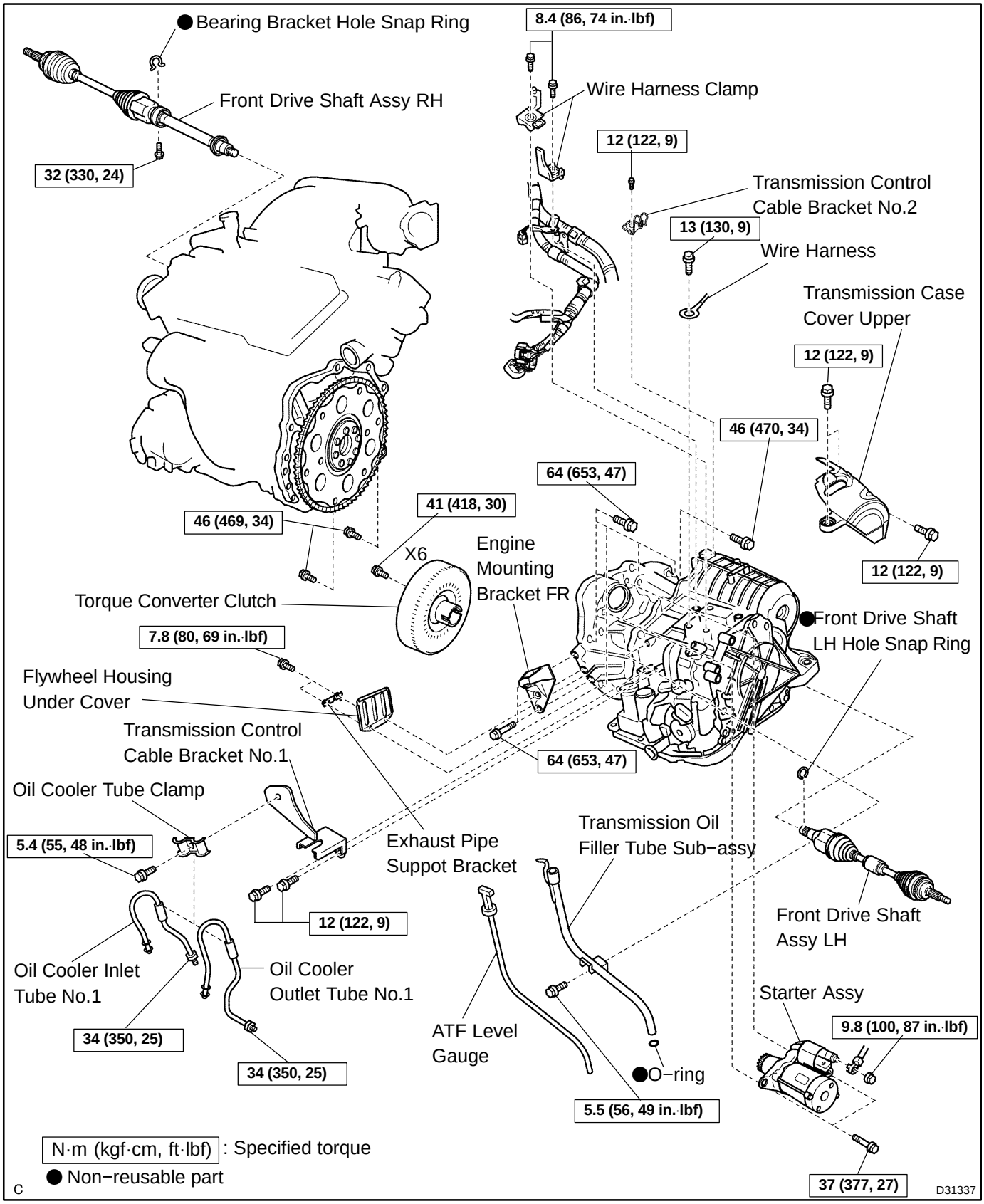

40158−03

REPLACEMENT

1. REMOVE ENGINE ASSEMBLY WITH TRANSAXLE (SEE PAGE 14−164)

2. REMOVE FRONT DRIVE SHAFT ASSY RH (SEE PAGE 30−8)

3. REMOVE FRONT DRIVE SHAFT ASSY LH (SEE PAGE 30−8)

SST 09520−01010, 09520−24010 (09520−32040)

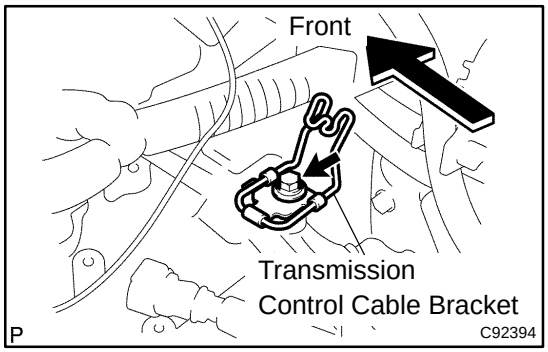

4. REMOVE TRANSMISSION CONTROL CABLE BRACKET NO.2

(a) Remove the bolt and transmission control cable bracket No.2.

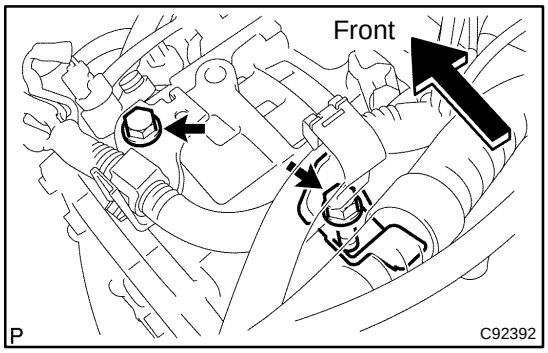

5. REMOVE WIRE HARNESS CLAMP

(a) Disconnect the wire harnesses from the 2 clamps.

(b) Remove the 2 bolts and 2 clamps.

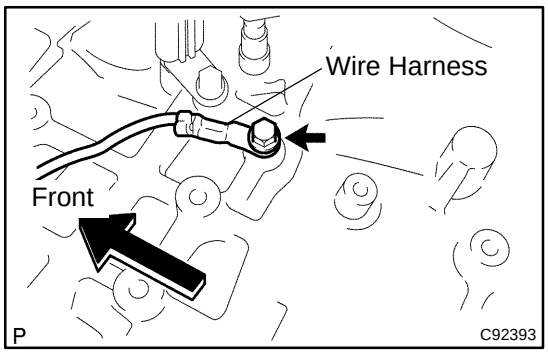

6. DISCONNECT WIRE HARNESS

(a) Remove the bolt and disconnect the wire harness.

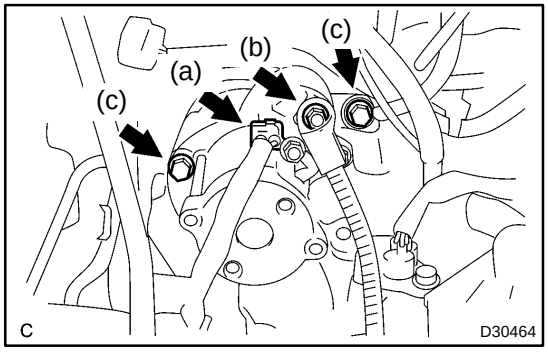

7. REMOVE STARTER ASSY

(a) Disconnect the connector.

(b) Remove the nut and disconnect the starter wire.

(c) Remove the 2 bolts and starter assy.

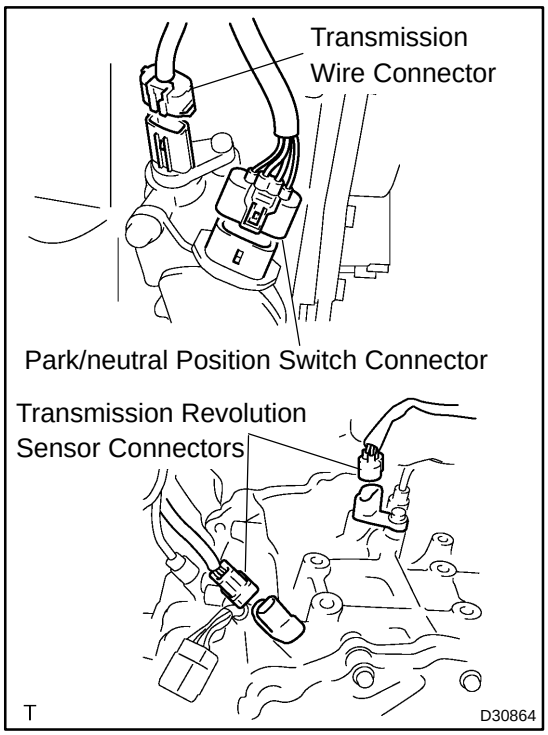

8. DISCONNECT CONNECTOR

(a) Disconnect the transmission wire connector.
(b) Disconnect the park/neutral position switch connector.
(c) Disconnect the 2 transmission revolution sensor connectors.

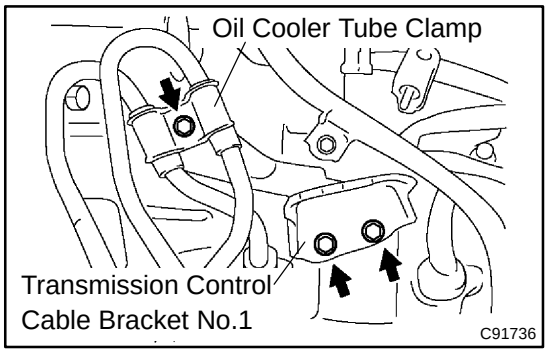

9. REMOVE TRANSMISSION CONTROL CABLE BRACKET NO.1

(a) Remove the bolt and oil cooler tube clamp.
(b) Remove the 2 bolts and transmission control cable bracket No.1.

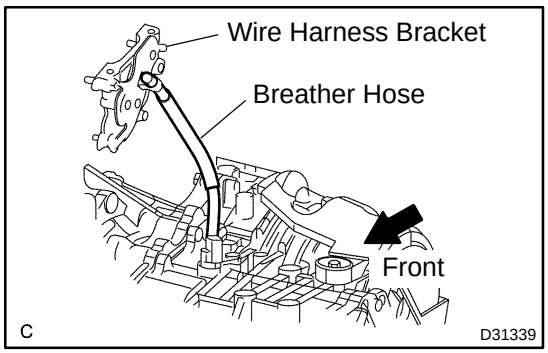

10. REMOVE TRANSMISSION OIL FILLER TUBE SUB−ASSY

(a) Remove the ATF level gauge.
(b) Disconnect the breather hose from the wire harness bracket.

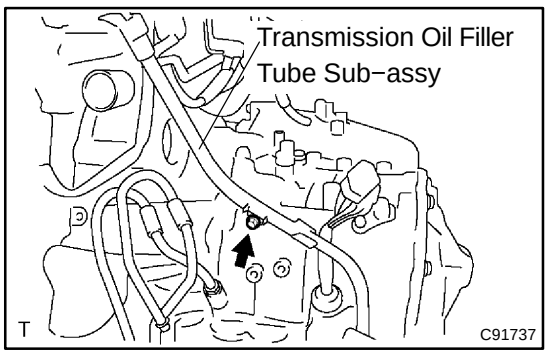

(c) Remove the bolt and transmission oil filler tube sub−assy.
(d) Remove the O−ring from the oil filler tube sub−assy.

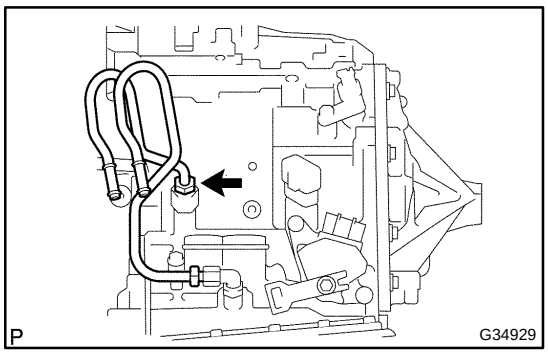

11. DISCONNECT OIL COOLER INLET TUBE NO.1

(a) Disconnect the oil cooler inlet tube No.1.

12. DISCONNECT OIL COOLER OUTLET TUBE NO.1

(a) Disconnect the oil cooler outlet tube No.1.

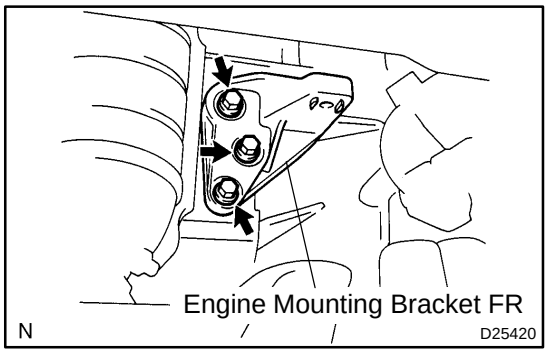

13. REMOVE ENGINE MOUNTING BRACKET FR

(a) Remove the 3 bolts and engine mounting bracket FR.

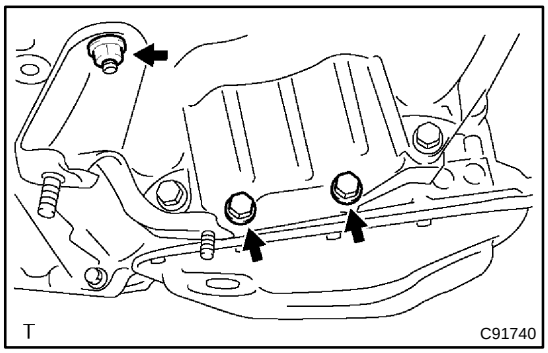

14. REMOVE AUTOMATIC TRANSAXLE ASSY

(a) Remove the 2 bolts and nut.

(b) Remove the exhaust pipe support bracket and exhaust pipe support bracket No.1 from the automatic transaxle.

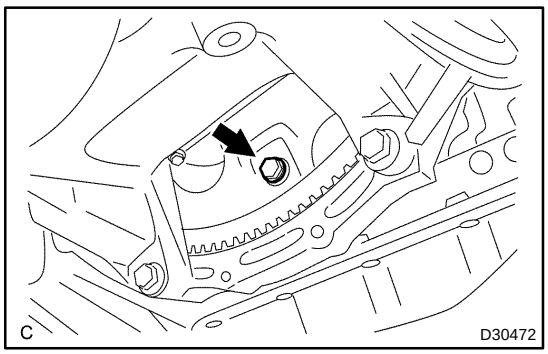

(c) Turn the crankshaft to gain access and remove the 6 bolts while holding the crankshaft pulley bolt with a wrench.

HINT:

There will be one green colored bolt.

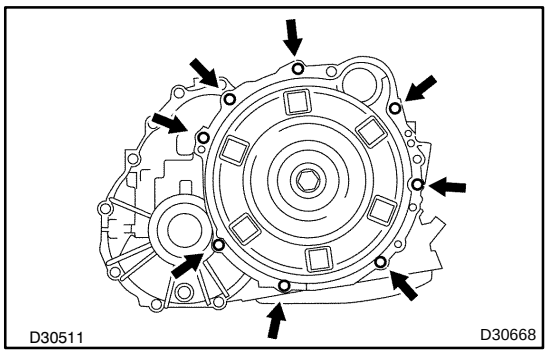

(d) Remove the 8 bolts.
(e) Separate and remove the automatic transaxle.

15. REMOVE TORQUE CONVERTER CLUTCH ASSY

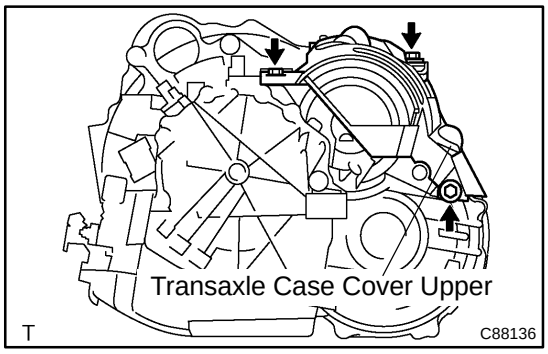

16. REMOVE TRANSAXLE CASE COVER UPPER
(a) Remove the 3 bolts and transmission case cover upper.

17. INSPECT TORQUE CONVERTER CLUTCH ASSY (SEE PAGE 40−27)
SST 09350−32014 (09351−32010, 09351−32020)

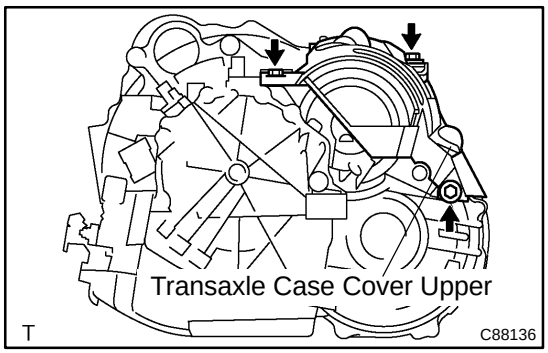

18. INSTALL TRANSAXLE CASE COVER UPPER
(a) Install the transmission case cover upper with the 3 bolts.
Torque: 12 N·m (122 kgf·cm, 9 ft·lbf)

19. INSTALL TORQUE CONVERTER CLUTCH ASSY

(a) Install the torque converter clutch to the automatic transaxle.

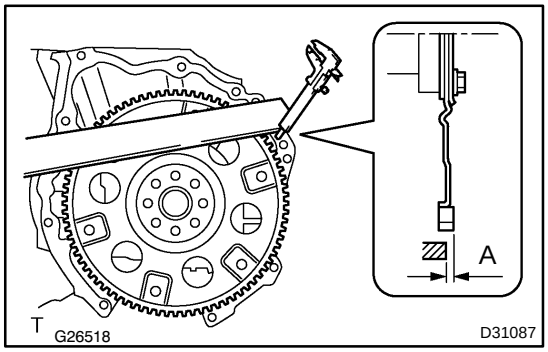

(b) Using vernier calipers and a straight edge, measure the dimension ”A” between the transaxle fitting part of the engine and the converter fitting part of the drive plate.

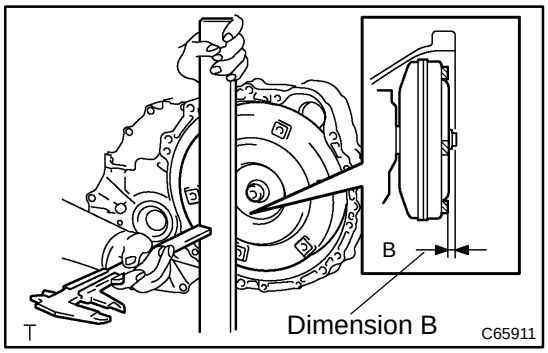

(c) Using vernier calipers and a straight edge, measure the dimension ”B” shown in the illustration and check that ”B” is greater than ”A” (measured in step (b)).

Standard: A + 1 (0.03937 in.) mm or more

NOTICE:

Remember to minus the thickness of the straight edge.

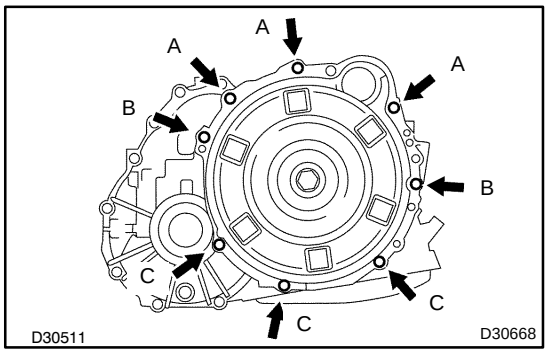

20. INSTALL AUTOMATIC TRANSAXLE ASSY

(a) Install the automatic transaxle to the engine with the 8 bolts.

Torque:

Bolt A: 64 N·m (653 kgf·cm, 47 ft·lbf)

Bolt B: 46 N·m (470 kgf·cm, 34 ft·lbf)

Bolt C: 37 N·m (377 kgf·cm, 27 ft·lbf)

(b) Apply a few drops of adhesive to 2 threads on the tip of the 6 torque converter clutch mounting bolts.

Adhesive: Part No. 08833−00070, THREE BOND 1324 or equivalent

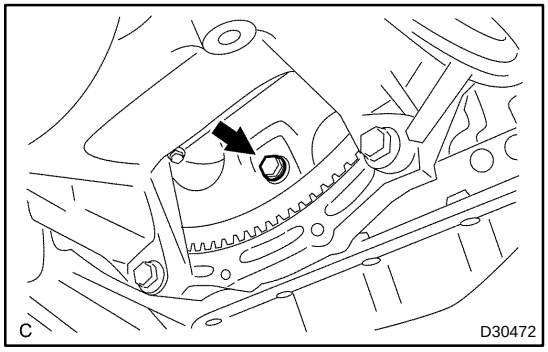

(c) Install the 6 torque converter clutch mounting bolts.

Torque: 41 N·m (418 kgf·cm, 30 ft·lbf)

NOTICE:

First install the green colored bolt, and then the remaining 5 bolts.

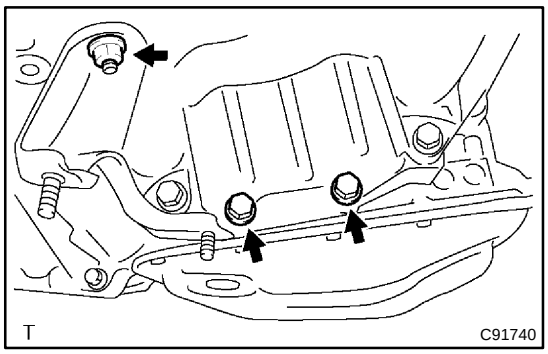

(d) Install the exhaust pipe support bracket and exhaust pipe support bracket No.1 to the automatic transaxle with the 2 bolts and nut.
Torque:
Bolt : 7.8 N·m (80 kgf·cm, 69 in.·lbf)
Nut : 21 N·m (214 kgf·cm, 16 ft·lbf)

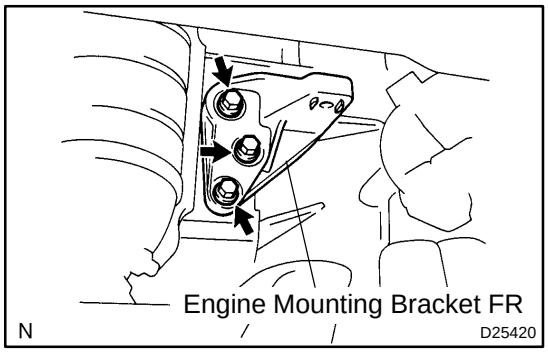

21. INSTALL ENGINE MOUNTING BRACKET FR
(a) Install the engine mounting bracket FR with the 3 bolts to the automatic transaxle.
Torque: 64 N·m (653 kgf·cm, 47 ft·lbf)

22. INSTALL TRANSMISSION OIL FILLER TUBE SUB−ASSY
(a) Coat a new O−ring with ATF, and install it to the oil filler tube.

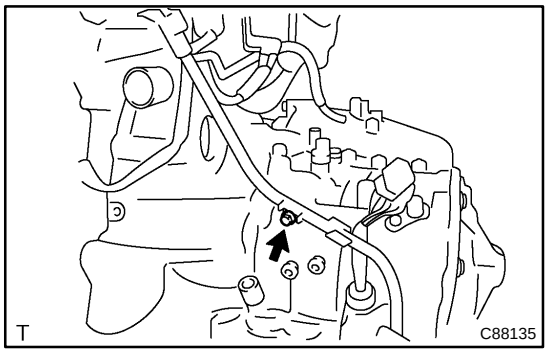

(b) Install the oil filler tube to the automatic transaxle with the bolt.
Torque: 5.5 N·m (56 kgf·cm, 49 in.·lbf)

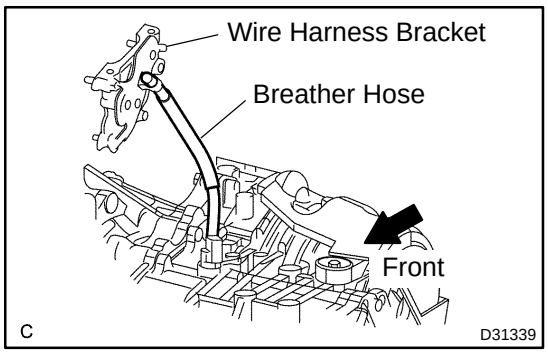

(c) Connect the breather hose to the wire harness bracket.
NOTICE:
The breather hose should be on the left side of the vehicle.
(d) Install the ATF level gauge.

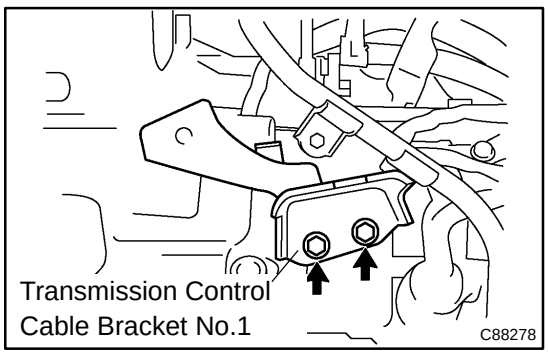

23. INSTALL TRANSMISSION CONTROL CABLE BRACKET NO.1
(a) Install the control cable bracket No.1 with the 2 bolts.
Torque: 12 N·m (122 kgf·cm, 9 ft·lbf)

24. INSTALL OIL COOLER INLET TUBE NO.1
(a) Temporarily install the oil cooler outlet tube No.1.
(b) Temporarily install the oil cooler inlet tube No.1.

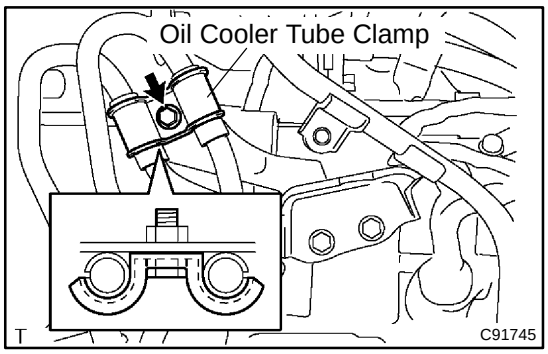

(c) Install the oil cooler tube clamp and bolt.
Torque: 5.4 N·m (55 kgf·cm, 48 in.·lbf)

HINT:
Install them so that the oil cooler tube cushion is positioned as shown in the illustration.

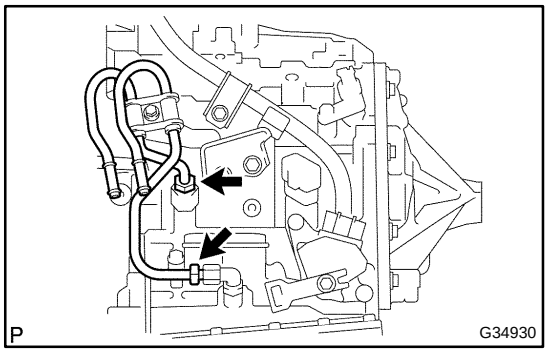

(d) Install the oil cooler inlet tube No.1.
Torque: 34 N·m (350 kgf·cm, 25 ft·lbf)

25. INSTALL OIL COOLER OUTLET TUBE NO.1

(a) Install the oil cooler outlet tube No.1.

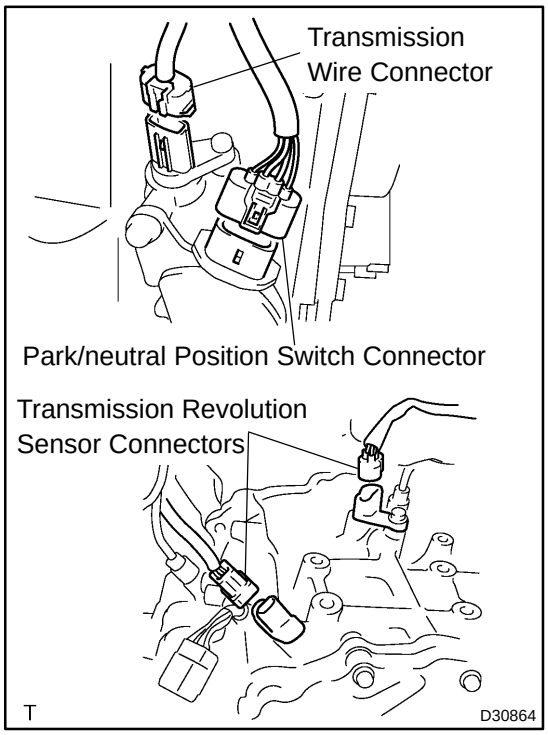

26. CONNECT CONNECTOR

(a) Connect the transmission wire connector.
(b) Connect the park/neutral position switch connector.
(c) Connect the 2 transmission revolution sensor connectors.

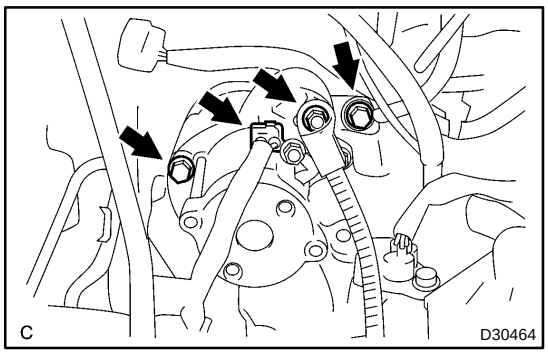

27. INSTALL STARTER ASSY

(a) Install the starter assy with the 2 bolts.
Torque: 37 N·m (377 kgf·cm, 27 ft·lbf)

(b) Connect the connecter.

(c) Connect the starter wire with the nut.
Torque: 9.8 N·m (100 kgf·cm, 87 in.·lbf)

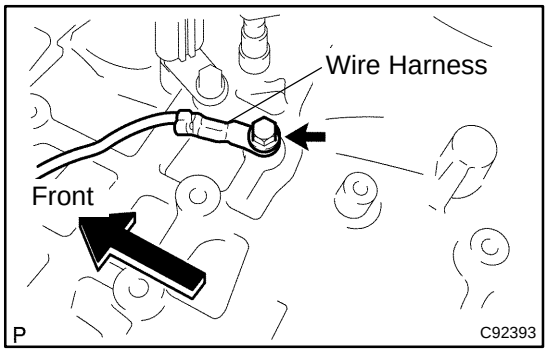

28. CONNECT WIRE HARNESS

(a) Connect the wire harness with the bolt.
Torque: 13 N·m (139 kgf·cm, 9 ft·lbf)

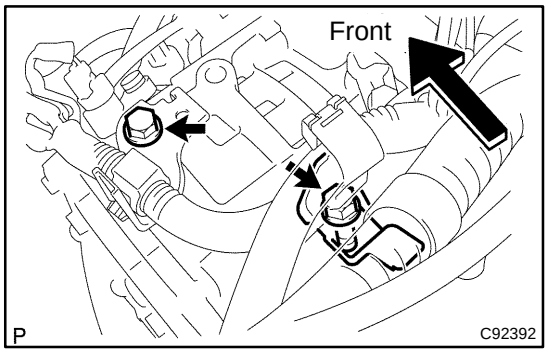

29. INSTALL WIRE HARNESS CLAMP

(a) Install the 2 clamps and 2 bolts.
Torque: 8.4 N·m (86 kgf·cm, 74 in.·lbf)

(b) Connect the wire harnesses to the clamps.

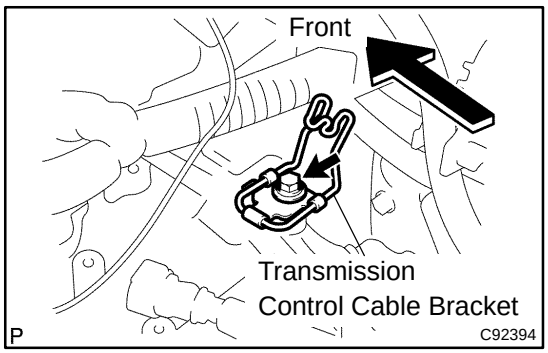

30. INSTALL TRANSMISSION CONTROL CABLE BRACKET NO.2

(a) Install the transmission control cable bracket No.2 with the bolt.
Torque: 12 N·m (122 kgf·cm, 9 ft·lbf)

31. INSTALL FRONT DRIVE SHAFT ASSY LH (SEE PAGE 30−8)
32. INSTALL FRONT DRIVE SHAFT ASSY RH (SEE PAGE 30−8)
33. INSTALL ENGINE ASSEMBLY WITH TRANSAXLE (SEE PAGE 14−164)
34. RESET MEMORY (SEE PAGE 05−1251)

AUTOMATIC TRANSAXLE ASSY (U250E)

COMPONENTS

40156−03

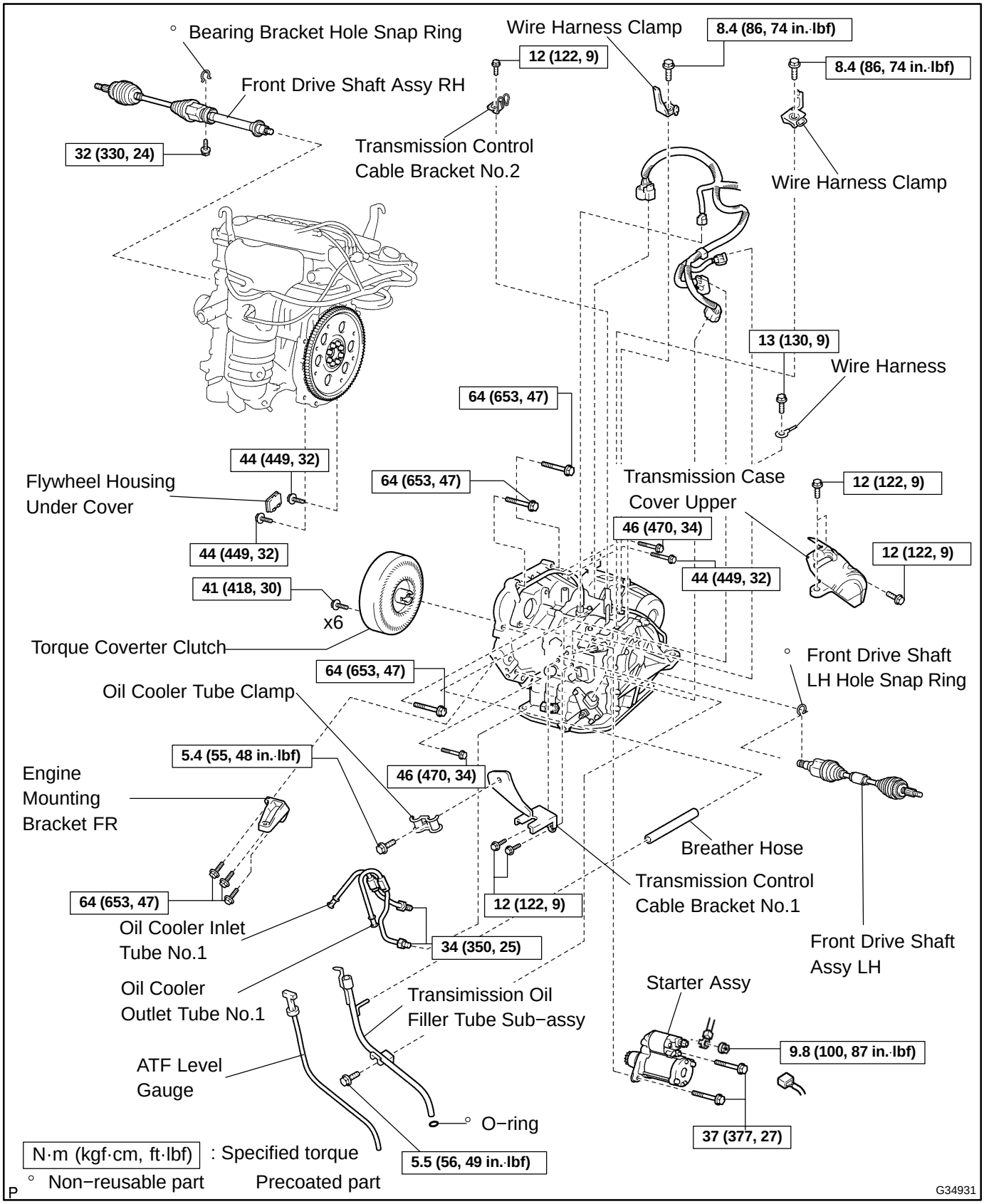

401EI−01

REPLACEMENT

1. REMOVE ENGINE ASSEMBLY WITH TRANSAXLE (SEE PAGE 14−29)

2. REMOVE FRONT DRIVE SHAFT ASSY RH (SEE PAGE 30−8)

3. REMOVE FRONT DRIVE SHAFT ASSY LH (SEE PAGE 30−8)

SST 09520−01010, 09520−24010 (09520−32040)

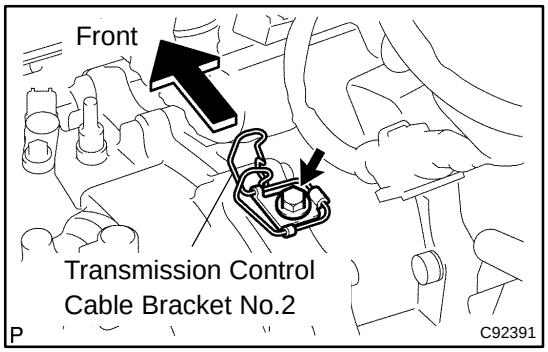

4. REMOVE TRANSMISSION CONTROL CABLE BRACKET NO.2

(a) Remove the bolt and transmission control cable bracket No.2.

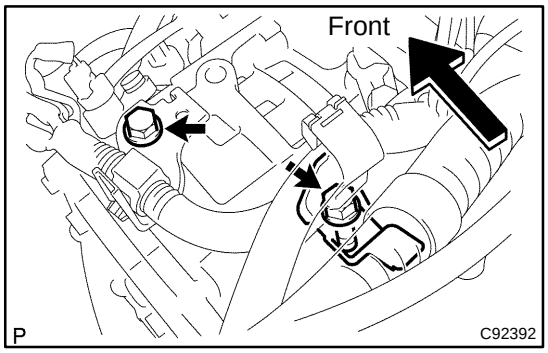

5. REMOVE WIRE HARNESS CLAMP

(a) Disconnect the wire harnesses from the 2 clamps.

(b) Remove the 2 bolts and 2 clamps.

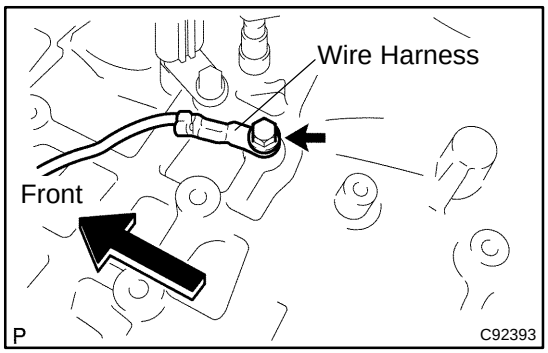

6. DISCONNECT WIRE HARNESS

(a) Remove the bolt and disconnect the wire harness.

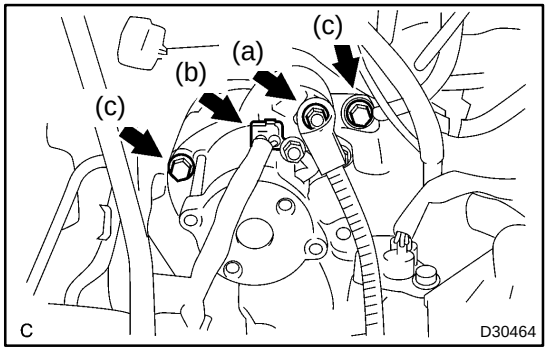

7. REMOVE STARTER ASSY

(a) Remove the nut and disconnect the starter wire.

(b) Disconnect the connector.

(c) Remove the 2 bolts and starter assy.

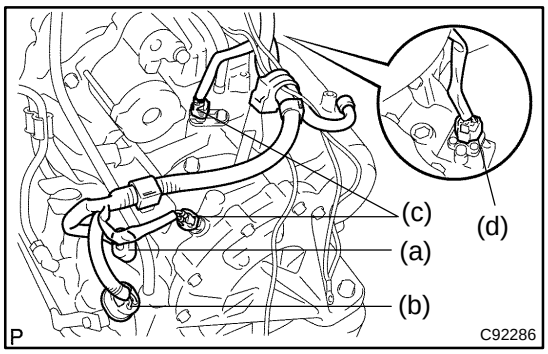

8. DISCONNECT CONNECTOR

(a) Disconnect the transmission wire connector.
(b) Disconnect the park/neutral position switch connector.
(c) Disconnect the 2 speed sensor connectors.
(d) Disconnect the speedometer driven gear connector.

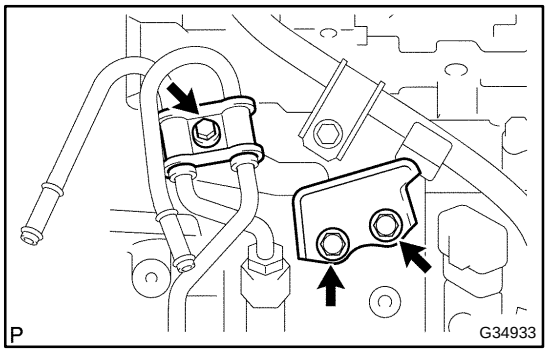

9. REMOVE TRANSMISSION CONTROL CABLE BRACKET NO.1

(a) Remove the bolt and oil cooler tube clamp.
(b) Remove the 2 bolts and transmission control cable bracket No.1.

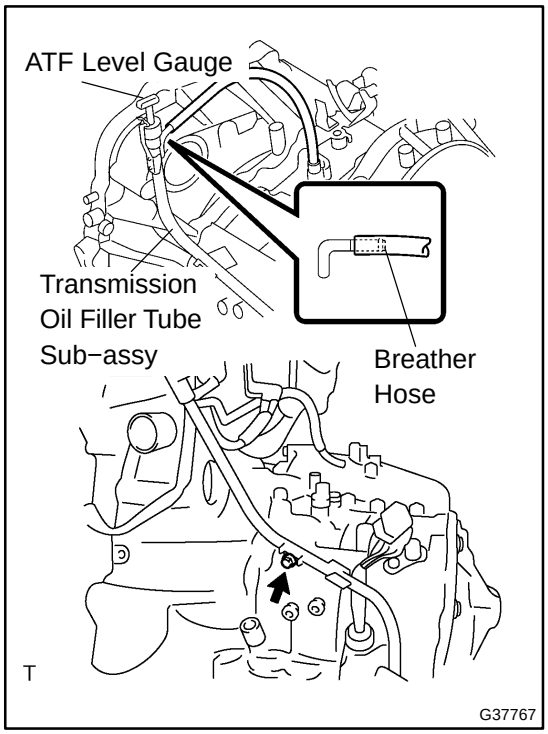

10. REMOVE TRANSMISSION OIL FILLER TUBE SUB−ASSY

(a) Remove the ATF level gauge.
(b) Remove the breather hose from the automatic transaxle.
(c) Remove the bolt and transmission oil filler tube sub−assy.
(d) Remove the O−ring from the oil filler tube.

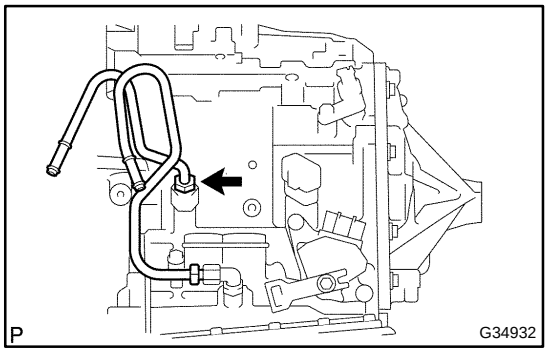

11. REMOVE OIL COOLER INLET TUBE NO.1

(a) Remove the oil cooler inlet tube No.1.

12. REMOVE OIL COOLER OUTLET TUBE NO.1

(a) Remove the oil cooler outlet tube No.1.

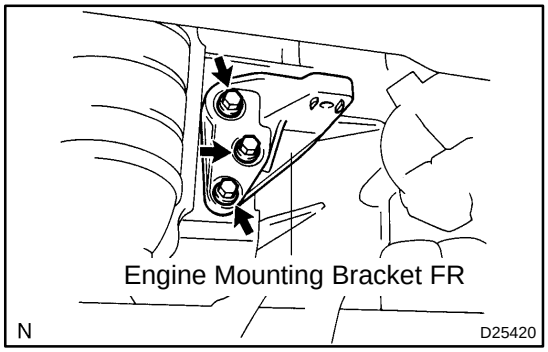

13. REMOVE ENGINE MOUNTING BRACKET FR

(a) Remove the 3 bolts and engine mounting bracket FR.

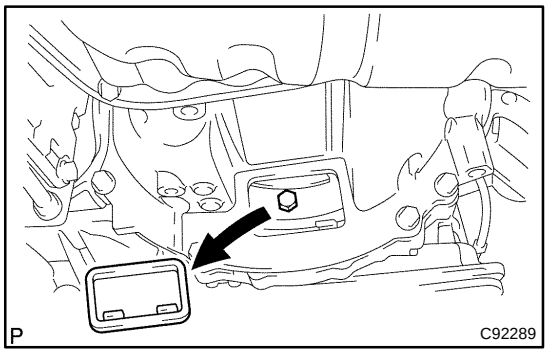

14. REMOVE FLYWHEEL HOUSING UNDER COVER

(a) Remove the flywheel housing under cover.

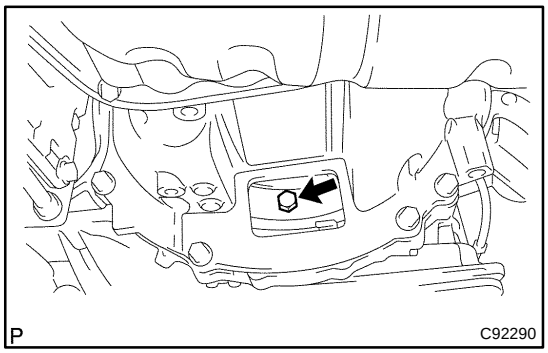

15. REMOVE AUTOMATIC TRANSAXLE ASSY

(a) Turn the crankshaft to gain access and remove the 6 bolts while holding the crankshaft pulley bolt with a wrench.

HINT:

There will be one green colored bolt.

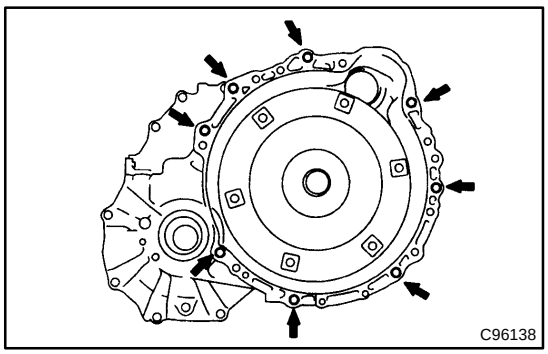

(b) Remove the 8 bolts.

(c) Separate and remove the automatic transaxle.

16. REMOVE TORQUE CONVERTER CLUTCH ASSY

17. INSPECT TORQUE CONVERTER CLUTCH ASSY (SEE PAGE 40−27)

SST 09350−32014 (09351−32010, 09351−32020)

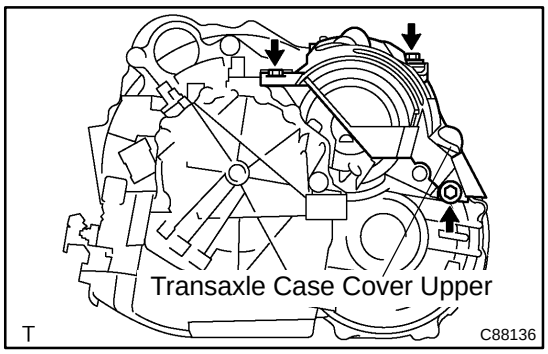

18. REMOVE TRANSAXLE CASE COVER UPPER

(a) Remove the 3 bolts and transmission case cover upper.

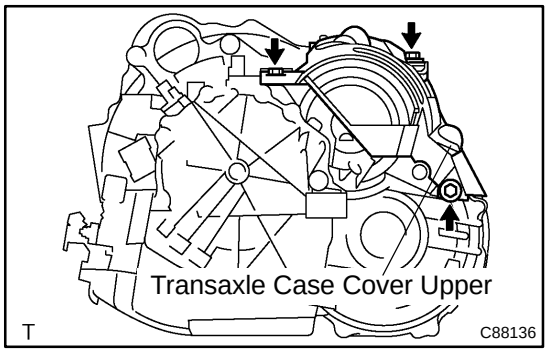

19. INSTALL TRANSAXLE CASE COVER UPPER

(a) Install the transmission case cover upper with the 3 bolts.
Torque: 12 N·m (122 kgf·cm, 9 ft·lbf)

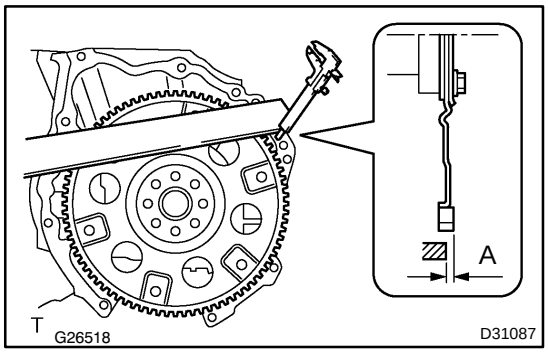

20. INSTALL TORQUE CONVERTER CLUTCH ASSY

(a) Using vernier calipers and a straight edge, measure the dimension ”A” between the transaxle fitting part of the engine and the converter fitting part of the drive plate.

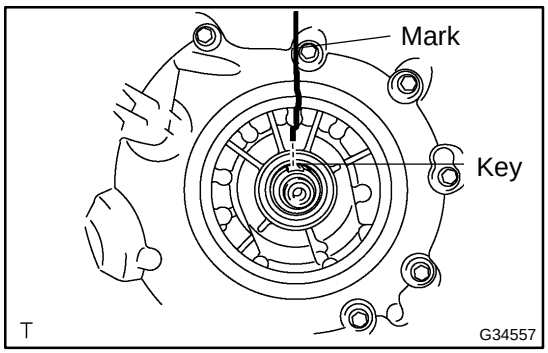

(b) Set the key of the front oil pump drive gear to the top and put a mark on the housing.

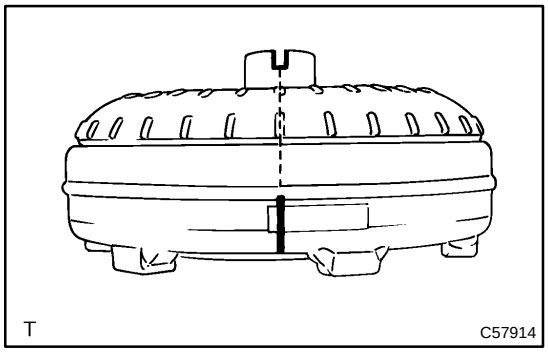

(c) Put a mark on the torque converter clutch so that its groove can be clearly indicated.

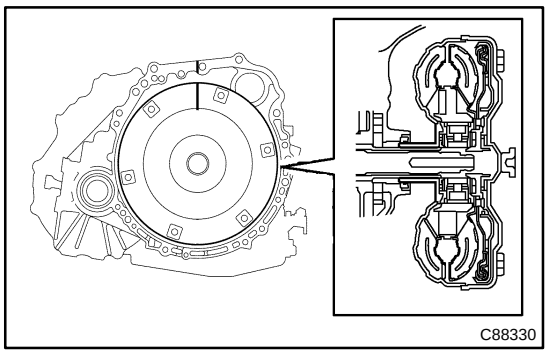

(d) Match the 2 marks on the transaxle case and the torque converter clutch and fit the splined part of the input shaft to the spline part of the turbine runner.

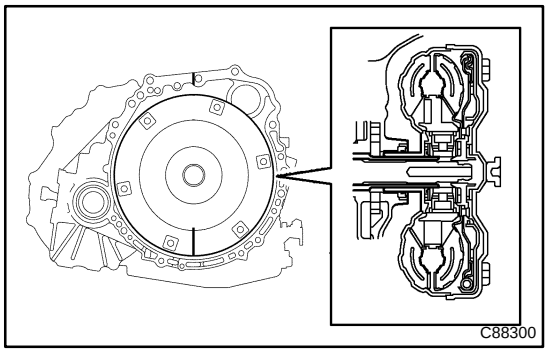

(e) Rotating the torque converter clutch, fit the spline part of the stator shaft with the spline part of the stator.

HINT:
Rotate it about 180 degrees.

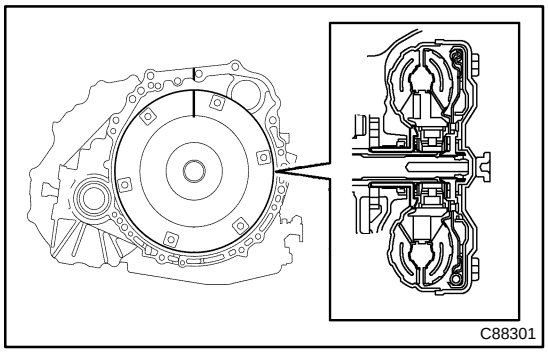

(f) Rotating the torque converter clutch, match the 2 marks on the case and the torque converter clutch again and fit the key of the oil pump drive gear into the key way of the torque converter clutch.

NOTICE:
When rotating the torque converter clutch, do not push it by excessive force.

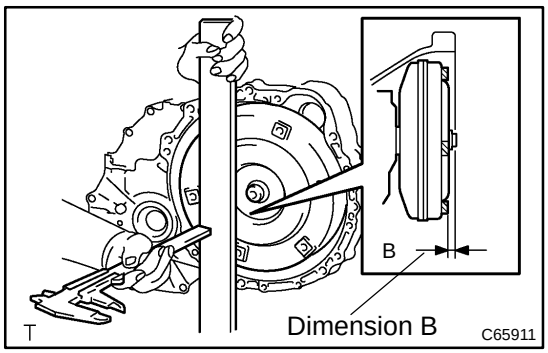

(g) Using vernier calipers and a straight edge, measure the dimension B shown in the illustration and check that B is greater than A measured in step (a).
Standard: A + 1 mm (0.04 in.) or more

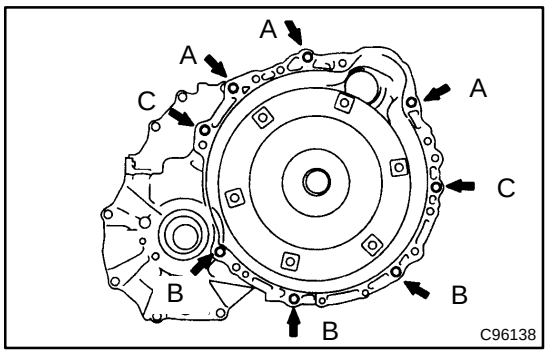

21. INSTALL AUTOMATIC TRANSAXLE ASSY

(a) Install the automatic transaxle to the engine with the 8 bolts.

Torque:
Bolt A: 64 N·m (653 kgf·cm, 47 ft·lbf)
Bolt B: 44 N·m (449 kgf·cm, 32 ft·lbf)
Bolt C: 46 N·m (470 kgf·cm, 34 ft·lbf)

(b) Apply a few drops of adhesive to 2 threads on the tip of the 6 torque converter clutch mounting bolts.

Adhesive: Part No. 08833−00070, THREE BOND 1324 or equivalent

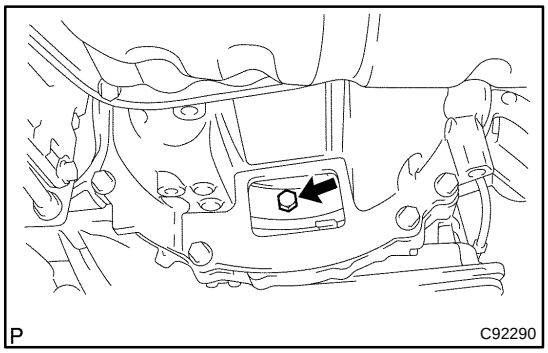

(c) Install the 6 torque converter clutch mounting bolts.

Torque: 41 N·m (418 kgf·cm, 30 ft·lbf)

NOTICE:

First install the green colored bolt and then the remaining 5 bolts.

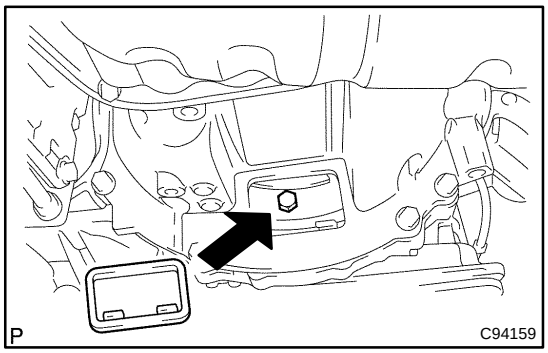

22. INSTALL FLYWHEEL HOUSING UNDER COVER

(a) Install the flywheel housing under cover.

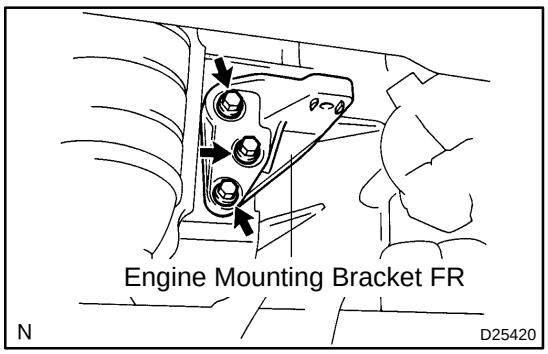

23. INSTALL ENGINE MOUNTING BRACKET FR

(a) Install the engine mounting bracket FR with the 3 bolts to the automatic transaxle.

Torque: 64 N·m (653 kgf·cm, 47 ft·lbf)

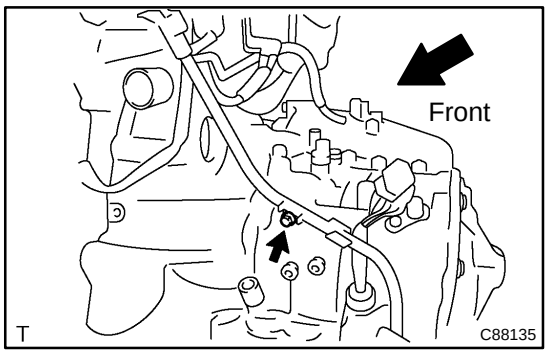

24. INSTALL TRANSMISSION OIL FILLER TUBE SUB−ASSY

(a) Coat a new O−ring with ATF, and install it to the oil filler tube.

(b) Install the oil filler tube to the automatic transaxle with the bolt.

Torque: 5.5 N·m (56 kgf·cm, 49 in.·lbf)

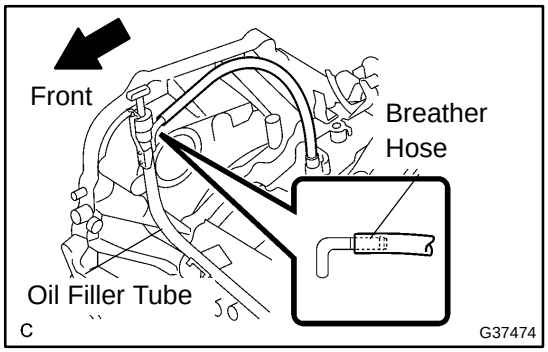

(c) Install the breather hose to the automatic transaxle.

(d) Install the ATF level gauge.

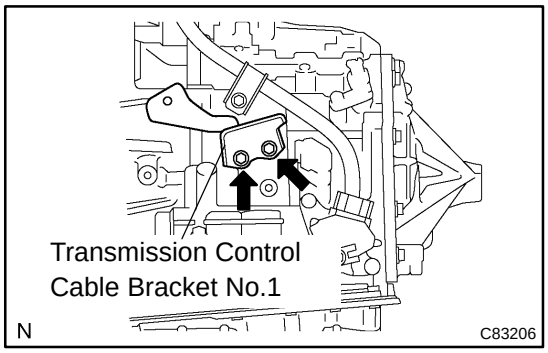

25. INSTALL TRANSMISSION CONTROL CABLE BRACKET NO.1

(a) Install the control cable bracket No.1 with the 2 bolts.

Torque: 12 N·m (122 kgf·cm, 9 ft·lbf)

26. INSTALL OIL COOLER INLET TUBE NO.1

(a) Temporarily install the oil cooler outlet tube No.1.

(b) Temporarily install the oil cooler inlet tube No.1.

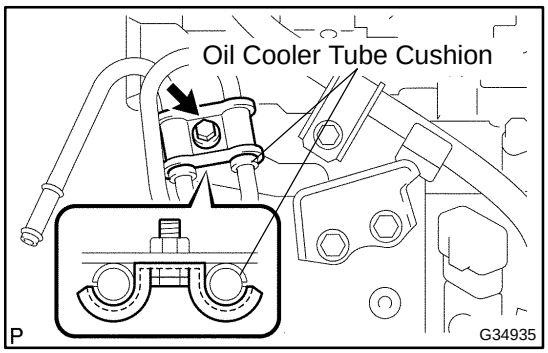

(c) Install the oil cooler tube clamp with the bolt.

Torque: 5.4 N·m (55 kgf·cm, 48 in.·lbf)

HINT:

Install them so that the oil cooler tube cushion is positioned as shown in the illustration.

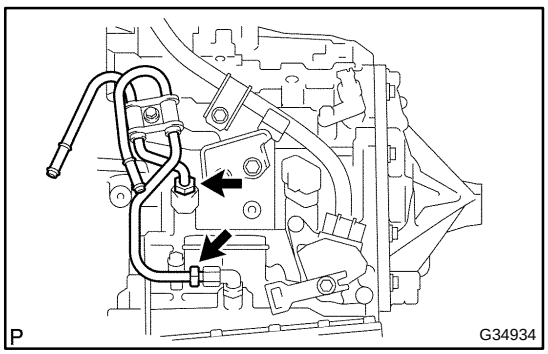

(d) Torque the oil cooler inlet tube No.1.

Torque: 34 N·m (350 kgf·cm, 25 ft·lbf)

27. INSTALL OIL COOLER OUTLET TUBE NO.1

(a) Torque the oil cooler outlet tube No.1.
Torque: 34 N·m (350 kgf·cm, 25 ft·lbf)

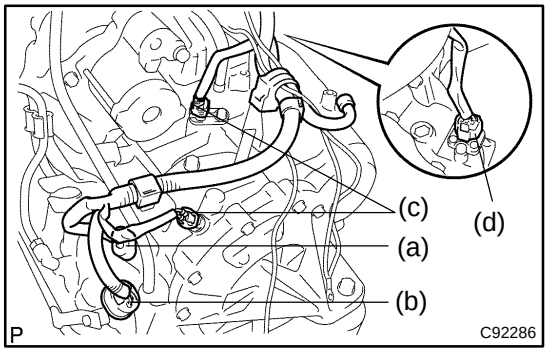

28. CONNECT CONNECTOR

(a) Connect the transmission wire connector.
(b) Connect the park/neutral position switch connector.
(c) Connect the 2 speed sensor connectors.
(d) Connect the speedometer driven gear connector.

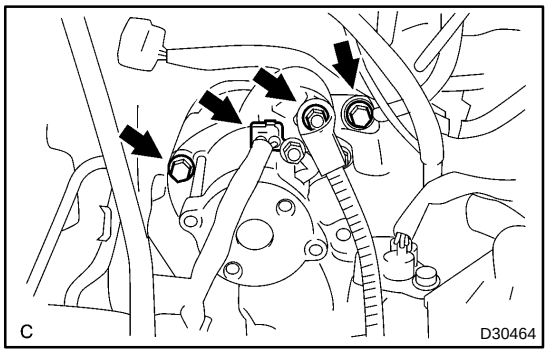

29. INSTALL STARTER ASSY

(a) Install the starter assy with the 2 bolts.
Torque: 37 N·m (377 kgf·cm, 27 ft·lbf)
(b) Connect the connecter.
(c) Connect the starter wire with the nut.
Torque: 9.8 N·m (100 kgf·cm, 87 in.·lbf)

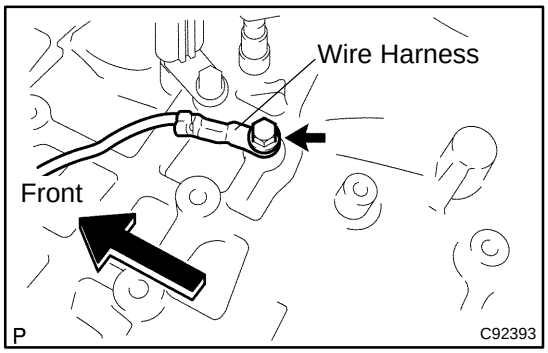

30. CONNECT WIRE HARNESS

(a) Connect the wire harness with the bolt.
Torque: 13 N·m (130 kgf·cm, 9 ft·lbf)

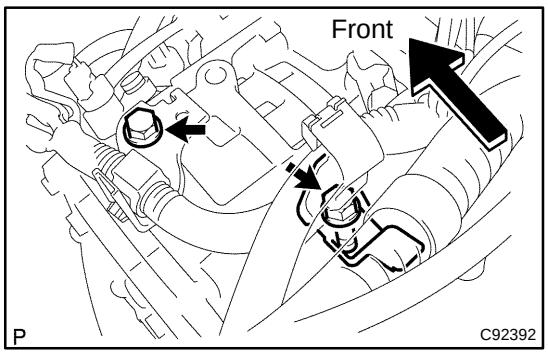

31. INSTALL WIRE HARNESS CLAMP

(a) Install the 2 clamps with the 2 bolts.
Torque: 8.4 N·m (86 kgf·cm, 74 in.·lbf)
(b) Connect the wire harnesses to the clamps.

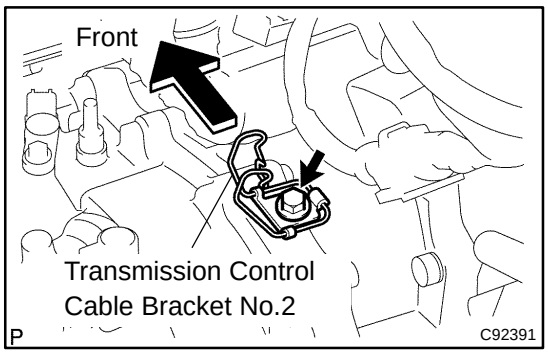

32. INSTALL TRANSMISSION CONTROL CABLE BRACKET NO.2

(a) Install the transmission control cable bracket No.2 with the bolt.

Torque: 12 N·m (122 kgf·cm, 9 ft·lbf)

33. INSTALL FRONT DRIVE SHAFT ASSY LH (SEE PAGE 30−8)

34. INSTALL FRONT DRIVE SHAFT ASSY RH (SEE PAGE 30−8)

35. INSTALL ENGINE ASSEMBLY WITH TRANSAXLE (SEE PAGE 14−29)

36. RESET MEMORY

NOTICE:

Perform the RESET MEMORY (AT initialization) when replacing the automatic transmission assy, engine assy or ECM (see page 05−1123).

HINT:

RESET MEMORY can not be completed by only disconnecting the battery terminal.

TORQUE CONVERTER CLUTCH AND DRIVE PLATE (ATM)

40063–16

INSPECTION

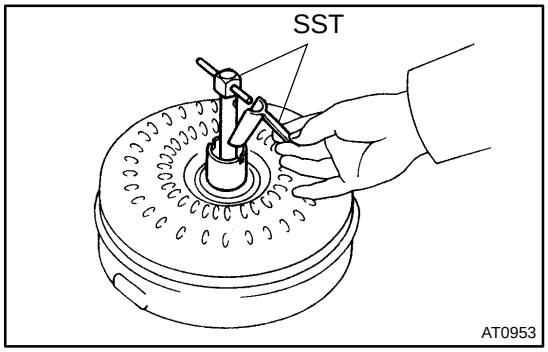

1. INSPECT TORQUE CONVERTER CLUTCH ASSY

(a) Inspect the one−way clutch.

(1) Install SST into the inner race of the one−way clutch.

SST 09350−32014 (09351−32010)

(2) Install SST so that it fits in the notch of the converter hub and outer race of the one−way clutch.

SST 09350−32014 (09351−32020)

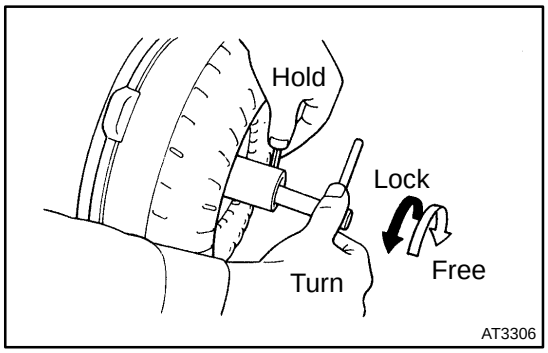

(3) With the torque converter clutch setting up on its side, check that the one−way clutch locks when it is turned counterclockwise, and rotates smoothly clockwise.

If necessary, clean the converter and retest the one−way clutch.

Replace the converter if the one−way clutch still fails the test.

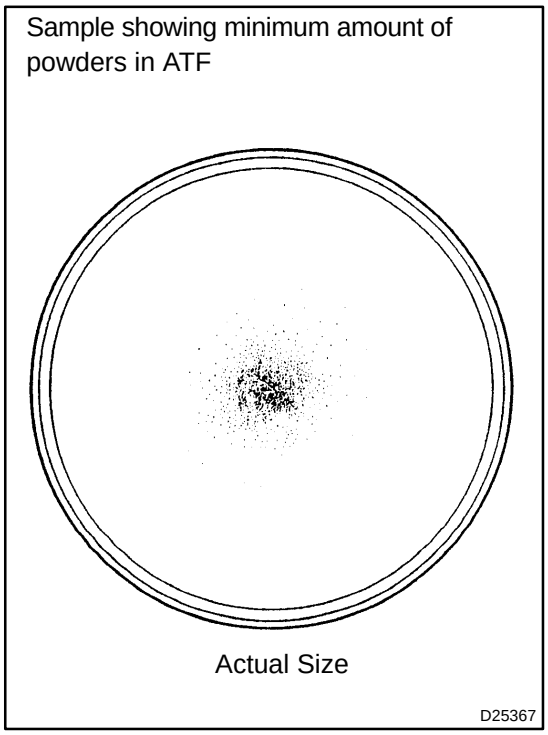

(b) Determine the condition of the torque converter clutch assy.

(1) If the inspection result of the torque converter clutch assy meets the following item, replace the torque converter clutch.

Malfunction item:

Any metallic sound is heard from the torque converter clutch during stall test or when the shift lever is in neutral position.

One−way clutch is free or locked in both directions.

Fine powders exceeding the sample limit is identified in ATF. (See the sample.)

HINT:

The sample shows the auto fluid of approx. 0.25 liters (0.26 US qts, 0.22 Imp. qts) that is taken out from the removed torque converter clutch

(c) Replace the ATF in the torque converter clutch.

(1) If the ATF is discolored and/or has a foul odor, completely stir the ATF in the torque converter clutch and drain it with the face for installation facing up.

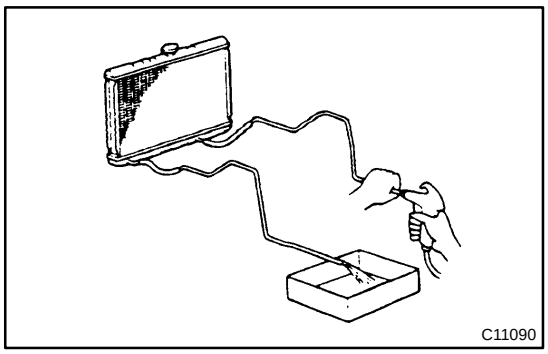
C11090

(d) Clean and check the oil cooler and oil pipe line.
(1) If the torque converter clutch is inspected or the ATF is exchanged, clean the oil cooler and oil pipe line.

HINT:

- Spray compressed air of 196 kPa (2 kgf/cm^2, 28 psi) from the inlet hose.
- If plenty of fine powders are identified in the ATF, add new ATF using a bucket pump and clean it again.

(2) If the ATF is cloudy, inspect the oil cooler (radiator).

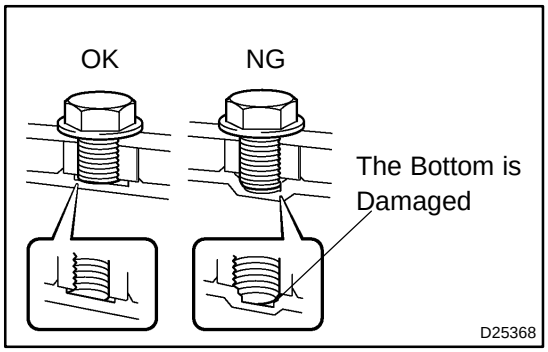

D25368

(e) Prevent deformation of the torque converter clutch and damage to the oil pump gear.
(1) When any marks due to interference are found on the end of the bolt for the torque converter clutch and on the bottom of the bolt hole, replace the bolt and the torque converter clutch.
(2) All of the bolts shall have the same length.
(3) No missing spring washer.

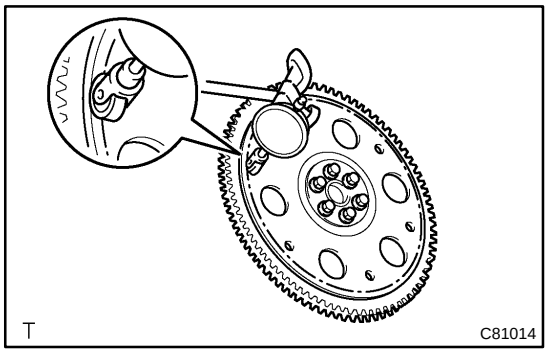
T
C81014

2. INSPECT DRIVE PLATE & RING GEAR SUB−ASSY

(a) Set up a dial indicator and measure the drive plate runout.
(b) Check the damage of the ring gear.
Maximum runout: 0.20 mm (0.0079 in.)

If the runout is not within the specification or ring gear is damaged, replace the drive plate.

TRANSMISSION REVOLUTION SENSOR (ATM)

4005U−07

REPLACEMENT

1. **REMOVE BATTERY**
2. **REMOVE AIR CLEANER ASSY (SEE PAGE 14−29) or (SEE PAGE 14−164)**
3. **REMOVE AIR CLEANER HOSE NO.1 (SEE PAGE 14−29) or (SEE PAGE 14−164)**
4. **REMOVE AIR CLEANER BRACKET (SEE PAGE 14−29) or (SEE PAGE 14−164)**
5. **REMOVE AIR CLEANER INLET NO.1 (SEE PAGE 14−29) or (SEE PAGE 14−164)**

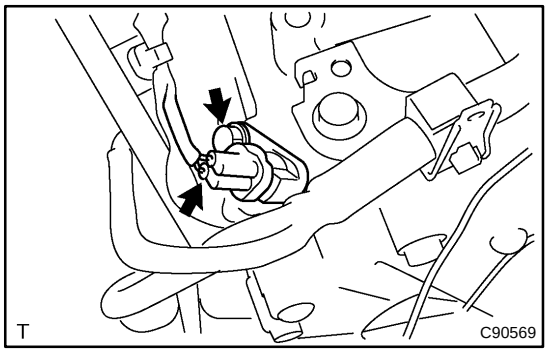

6. REMOVE TRANSMISSION REVOLUTION SENSOR (NT SENSOR)

(a) Disconnect the speed sensor connector.

(b) Remove the bolt and transmission revolution sensor.

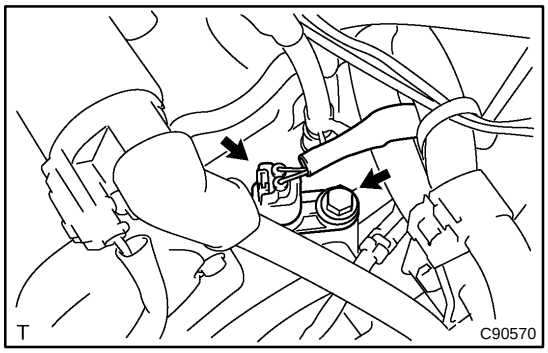

7. REMOVE TRANSMISSION REVOLUTION SENSOR (NC SENSOR)

(a) Disconnect the speed sensor connector.

(b) Remove the bolt and transmission revolution sensor.

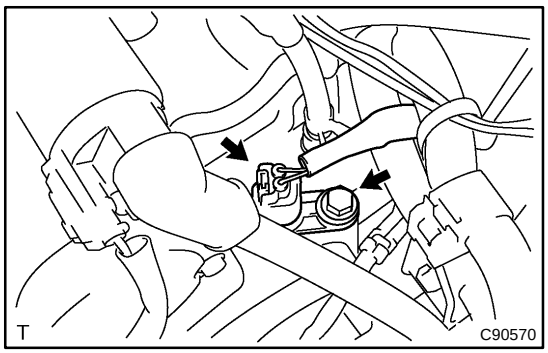

8. INSTALL TRANSMISSION REVOLUTION SENSOR (NC SENSOR)

(a) Coat an O−ring with ATF.

(b) Install the speed sensor with the bolt.

Torque:
11 N·m (110 kgf·cm, 8 ft·lbf) (U151E)
8.8 N·m (90 kgf·cm,78 in.·lbf) (U250E)

HINT:

Make sure of the manufacturer’s name.

(c) Connect the speed sensor connector.

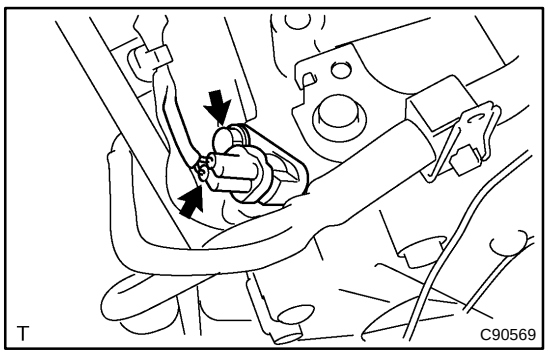

9. INSTALL TRANSMISSION REVOLUTION SENSOR (NT SENSOR)

(a) Coat an O−ring with ATF.

(b) Install the speed sensor with the bolt.

Torque: 11 N·m (110 kgf·cm, 8 ft·lbf)

HINT:

Make sure of the manufacturer’s name.

(c) Connect the speed sensor connector.

10. INSTALL AIR CLEANER INLET NO.1 (SEE PAGE 14−29) or (SEE PAGE 14−164)
11. INSTALL AIR CLEANER BRACKET (SEE PAGE 14−29) or (SEE PAGE 14−164)
12. INSTALL AIR CLEANER HOSE NO.1 (SEE PAGE 14−29) or (SEE PAGE 14−164)
13. INSTALL AIR CLEANER ASSY (SEE PAGE 14−29) or (SEE PAGE 14−164)
14. INSTALL BATTERY

TRANSMISSION WIRE (U151E)

401EJ−01

REPLACEMENT

1. REMOVE ENGINE UNDER COVER LH

2. DRAIN AUTOMATIC TRANSAXLE FLUID

(a) Remove the drain plug and gasket, and drain the ATF.

(b) Install a new gasket and the drain plug.
Torque: 49 N·m (500 kgf·cm, 36 ft·lbf)

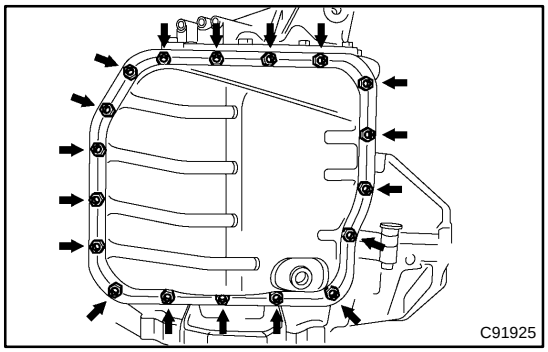

3. REMOVE AUTOMATIC TRANSAXLE OIL PAN SUB−ASSY

(a) Remove the 18 bolts, oil pan and gasket.

NOTICE:

Some fluid will remain in the oil pan. Remove all the pan bolts, and carefully remove the oil pan assembly.

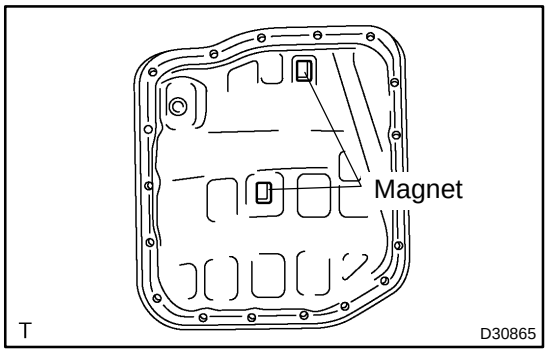

(b) Remove the 2 magnets from the oil pan.

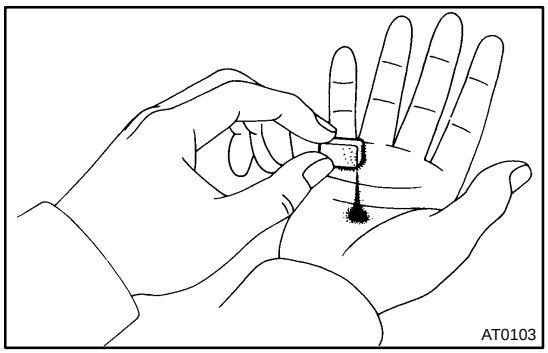

(c) Examine particles in the pan.

(1) Collect any steel chips with the removed magnets. Look carefully at the chips and particles in the pan and on the magnets to see the type of wear which might be found in the transaxle.
Steel (magnetic): bearing, gear and plate wear
Brass (non−magnetic): bearing wear

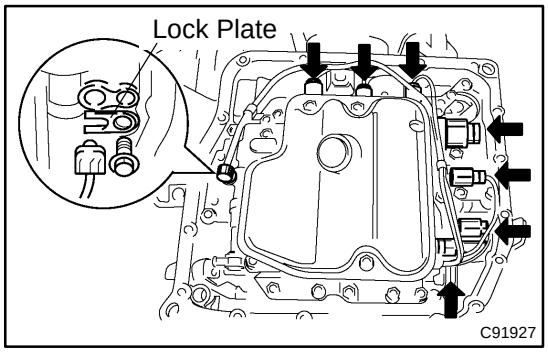

4. DISCONNECT TRANSMISSION WIRE

(a) Disconnect the 7 shift solenoid valve connectors.

(b) Remove the bolt and lock plate, and disconnect the ATF temperature sensor.

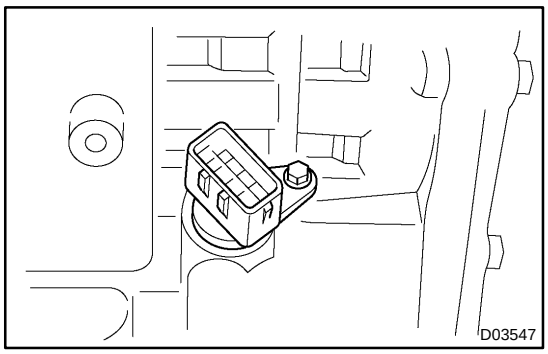

5. REMOVE TRANSMISSION WIRE

(a) Disconnect the transmission wire connectors.

(b) Remove the bolt and transmission wire.

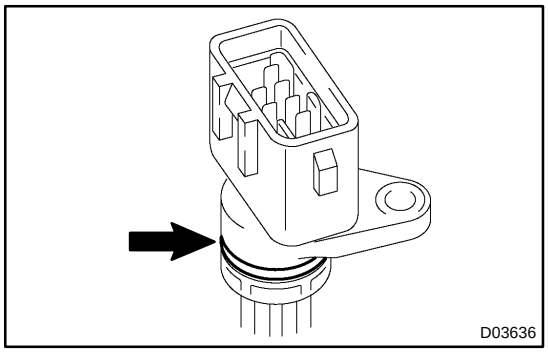

6. INSTALL TRANSMISSION WIRE

(a) Coat an O−ring of the transmission wire connector with ATF.

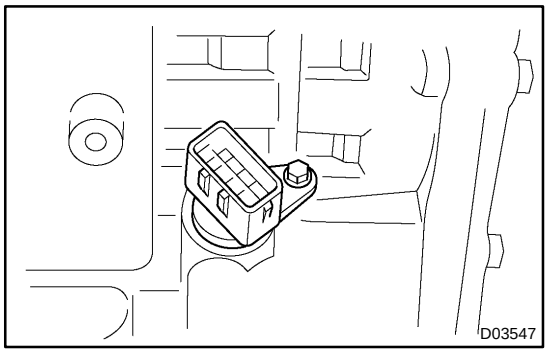

(b) Install the transmission wire with the bolt.
Torque: 5.4 N·m (55 kgf·cm, 48 in.·lbf)

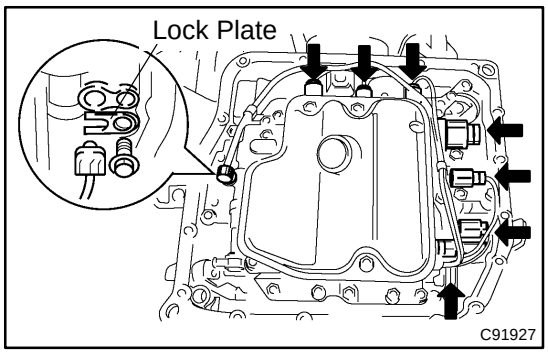

7. CONNECT TRANSMISSION WIRE

(a) Coat an O−ring of the ATF temperature sensor with ATF.

(b) Install the ATF temperature sensor with the lock plate and bolt.
Torque: 6.6 N·m (67 kgf·cm, 58 in.·lbf)

(c) Connect the 7 shift solenoid valve connectors.

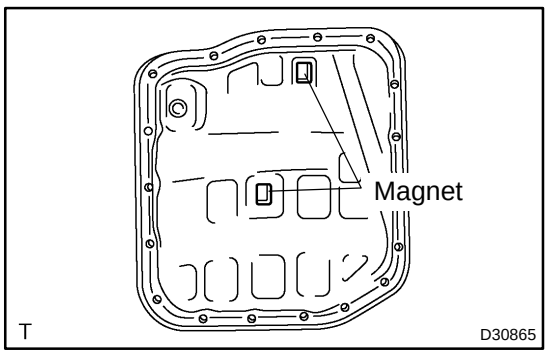

8. INSTALL AUTOMATIC TRANSAXLE OIL PAN SUB−ASSY

(a) Install the 2 magnets in the oil pan.

(b) Apply seal packing or equivalent to the 18 bolts.
Seal packing:
THREE BOND 2430 or equivalent

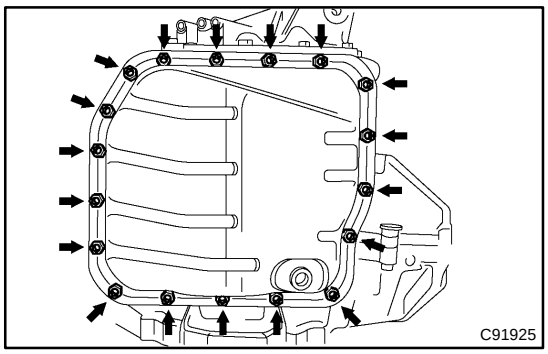

(c) Using a new gasket, install the oil pan with the 18 bolts to the transaxle case.
Torque: 7.8 N·m (80 kgf·cm, 69 in.·lbf)

NOTICE:
Apply seal packing to the bolts and tighten them within 10 minutes of application.

9. ADD AUTOMATIC TRANSAXLE FLUID
Fluid type: ATF type T−IV
Capacity: 3.5 liters (3.7 US qts, 3.1 lmp. qts)
10. INSPECT AUTOMATIC TRANSAXLE FLUID (SEE PAGE 40−2)
11. INSTALL ENGINE UNDER COVER LH

TRANSMISSION WIRE (U250E)

4015A−03

REPLACEMENT

1. REMOVE ENGINE UNDER COVER LH

2. DRAIN AUTOMATIC TRANSAXLE FLUID

(a) Remove the drain plug and gasket, and drain the ATF.

(b) Install a new gasket and the drain plug.

Torque: 49 N·m (500 kgf·cm, 36 ft·lbf)

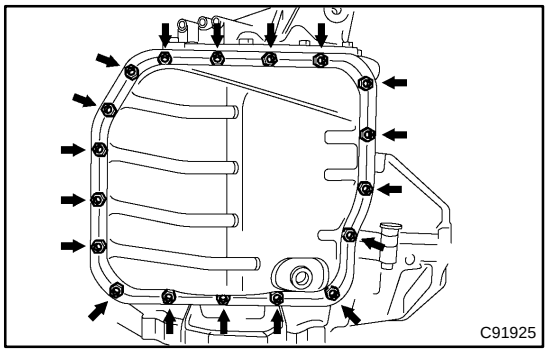

3. REMOVE AUTOMATIC TRANSAXLE OIL PAN SUB−ASSY

(a) Remove the 18 bolts, oil pan and gasket.

NOTICE:

Some fluid will remain in the oil pan. Remove all pan bolts, and carefully remove the oil pan assembly.

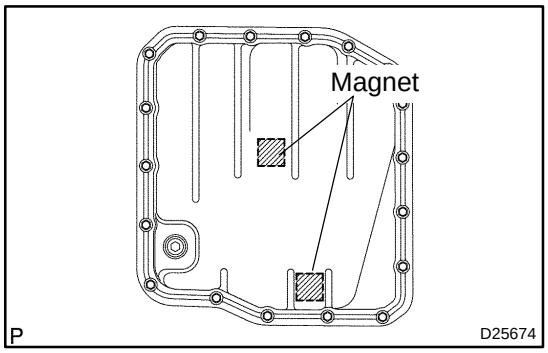

(b) Remove the 2 magnets from the oil pan.

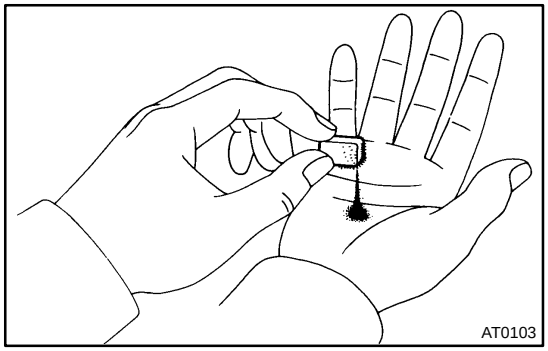

(c) Examine particles in the pan.

(1) Collect any steel chips with the removed magnets. Look carefully at the chips and particles in the pan and on the magnets to see the type of wear which might be found in the transaxle.

Steel (magnetic): bearing, gear and plate wear

Brass (non−magnetic): bearing wear

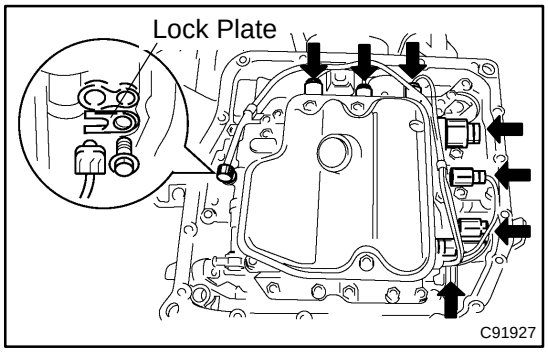

4. DISCONNECT TRANSMISSION WIRE

(a) Disconnect the 7 shift solenoid valve connectors.

(b) Remove the bolt and lock plate, and disconnect the ATF temperature sensor.

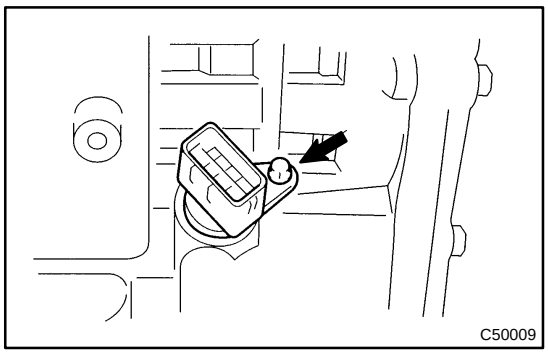

5. REMOVE TRANSMISSION WIRE

(a) Disconnect the transmission wire connector.

(b) Remove the bolt and transmission wire.

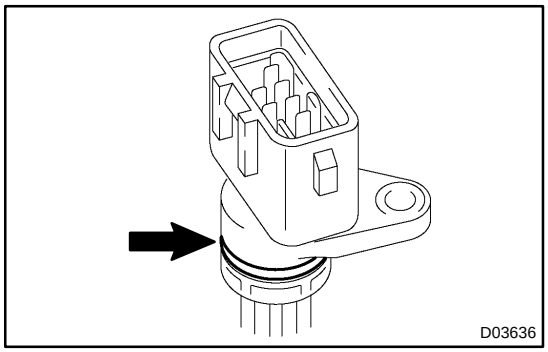

6. INSTALL TRANSMISSION WIRE

(a) Coat an O−ring of the transmission wire connector with ATF.

(b) Install the transmission wire.

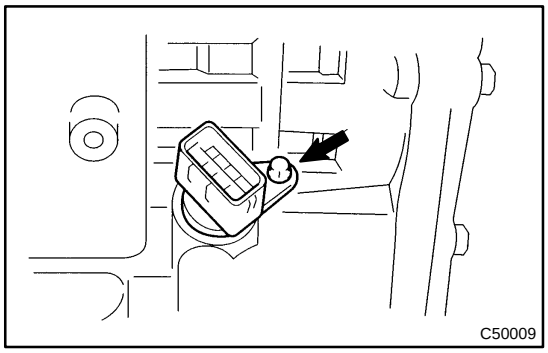

(c) Install the bolt.

Torque: 5.4 N·m (55 kgf·cm, 48 in.·lbf)

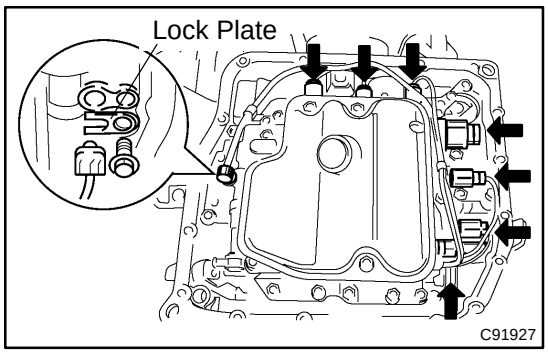

7. CONNECT TRANSMISSION WIRE

(a) Coat an O−ring of the ATF temperature sensor with ATF.

(b) Install the ATF temperature sensor with the lock plate and bolt.

Torque: 6.6 N·m (67 kgf·cm, 58 in.·lbf)

(c) Connect the 7 shift solenoid valve connectors.

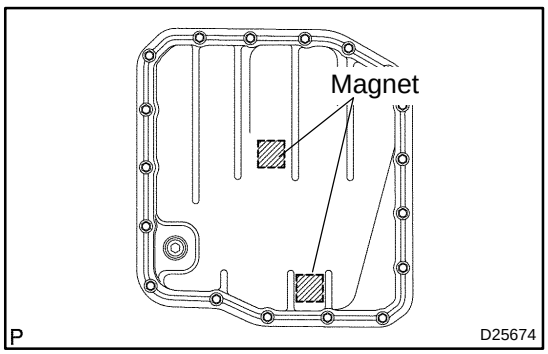

8. INSTALL AUTOMATIC TRANSAXLE OIL PAN SUB−ASSY

(a) Install the 2 magnets in the oil pan.

(b) Apply seal packing or equivalent to the 18 bolts.

Seal packing:
THREE BOND 2430 or equivalent

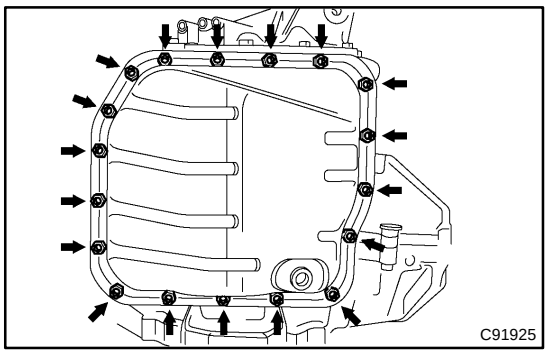

(c) Install the oil pan and a new gasket with the 18 bolts to the transaxle case.
Torque: 7.8 N·m (80 kgf·cm, 69 in.·lbf)

NOTICE:
Apply seal packing to the bolts and tighten them within 10 minutes of application.

9. ADD AUTOMATIC TRANSAXLE FLUID
Fluid type: ATF type T−IV
Capacity: 3.5 liters (3.7 US qts, 3.1 lmp. qts)
10. INSPECT AUTOMATIC TRANSAXLE FLUID (SEE PAGE 40−2)
11. INSTALL ENGINE UNDER COVER LH

TRANSMISSION VALVE BODY ASSY (U151E)

4010W−06

REPLACEMENT

1. REMOVE ENGINE UNDER COVER RH

2. DRAIN AUTOMATIC TRANSAXLE FLUID

(a) Remove the drain plug and gasket, and drain the ATF.

(b) Install a new gasket and the drain plug.
Torque: 49 N·m (500 kgf·cm, 36 ft·lbf)

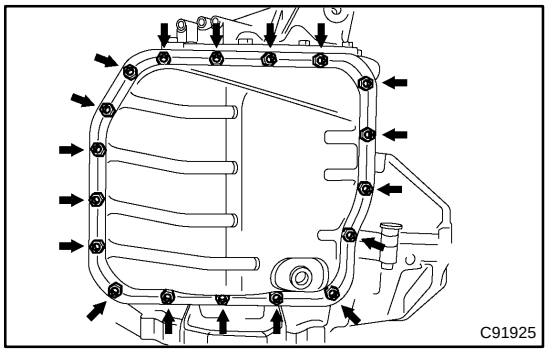

3. REMOVE AUTOMATIC TRANSAXLE OIL PAN SUB−ASSY

(a) Remove the 18 bolts, oil pan and gasket.

NOTICE:

Some fluid will remain in the oil pan. Remove all the pan bolts, and carefully remove the oil pan assembly.

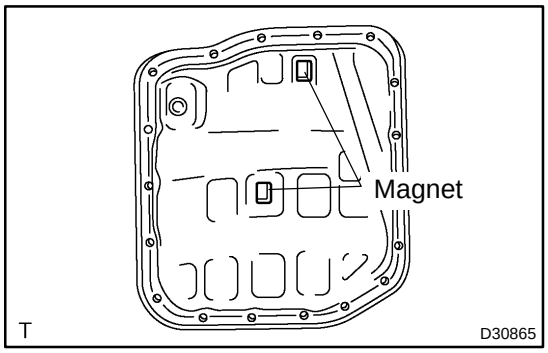

(b) Remove the 2 magnets from the oil pan.

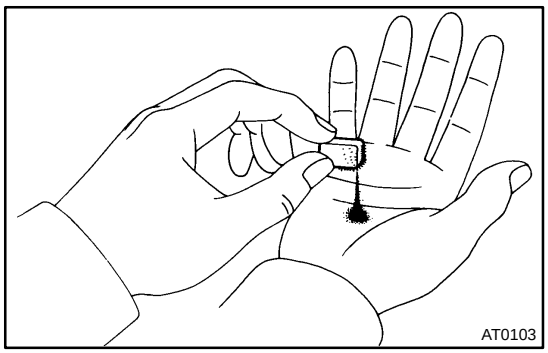

(c) Examine particles in the pan.

(1) Collect any steel chips with the removed magnets. Look carefully at the chips and particles in the pan and on the magnets to see the type of wear which might be found in the transaxle.
Steel (magnetic): bearing, gear and plate wear
Brass (non−magnetic): bearing wear

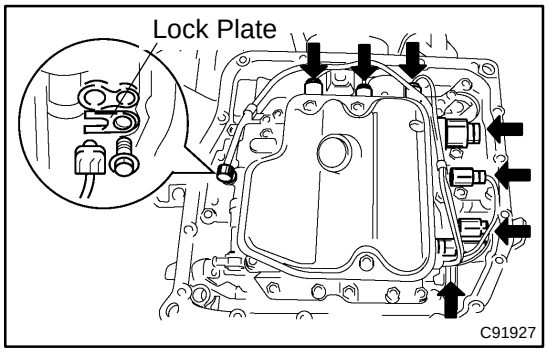

4. DISCONNECT TRANSMISSION WIRE

(a) Disconnect the 7 shift solenoid valve connectors.

(b) Remove the bolt and lock plate, and disconnect the ATF temperature sensor.

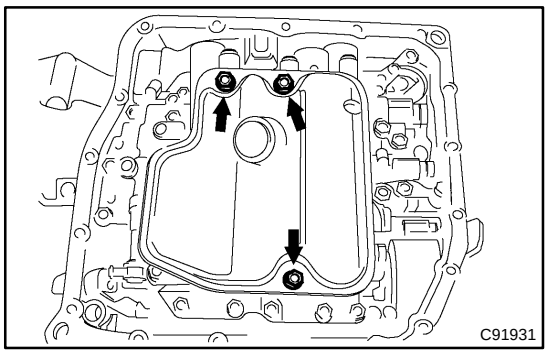

5. REMOVE VALVE BODY OIL STRAINER ASSY

(a) Remove the 3 bolts and oil strainer.

NOTICE:

Be careful that some fluid will come out of the oil strainer.

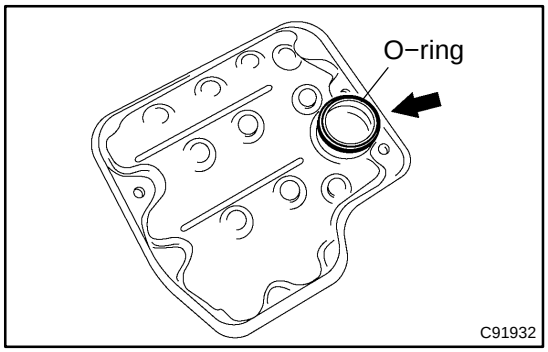

(b) Remove the O−ring from the oil strainer.

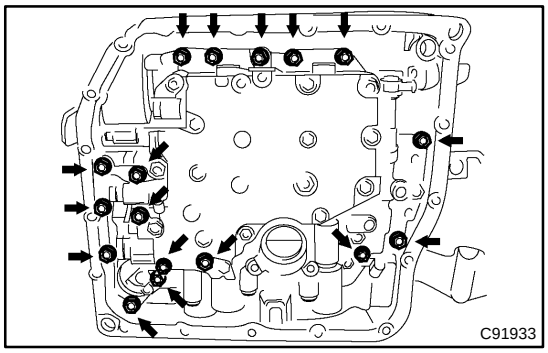

6. REMOVE TRANSMISSION VALVE BODY ASSY

(a) Support the valve body assy and remove the 17 bolts and the valve body assy.

NOTICE:

Be careful not to drop the check ball, spring and accumulator piston.

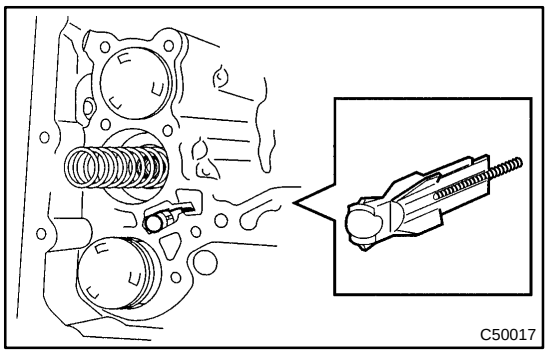

(b) Remove the check ball body and spring.

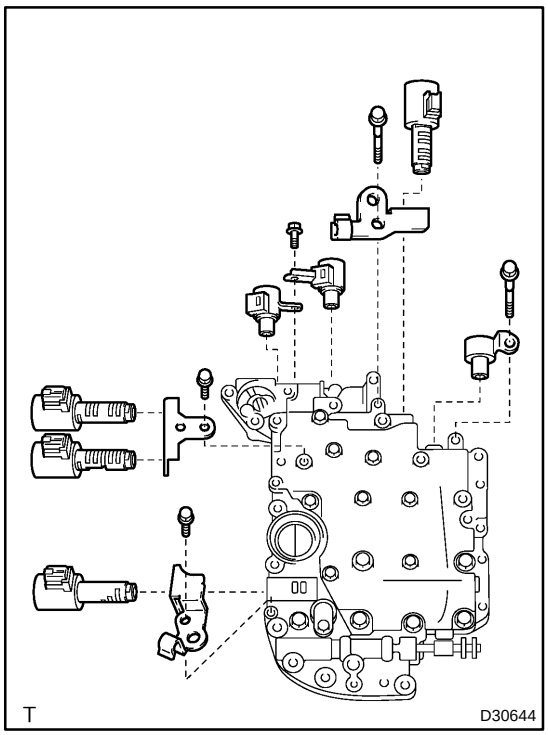

(c) Remove the 5 bolts and 7 shift solenoid valves.

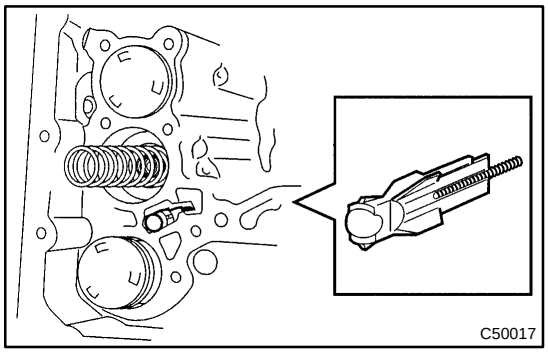

7. INSTALL TRANSMISSION VALVE BODY ASSY

(a) Install the spring and check ball body.

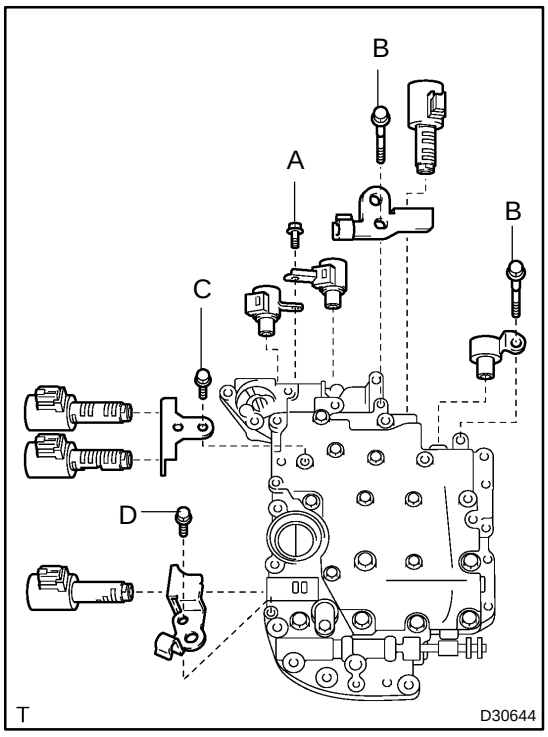

(b) Install the 7 shift solenoid valves with the 5 bolts.

Torque:
Bolts A, B: 11 N·m (110 kgf·cm, 8 ft.·lbf)
Bolts C, D: 6.6 N·m (67 kgf·cm, 58 in. lbf)
Bolt length:
Bolt A: 16 mm (0.63 in.)
Bolt B: 57 mm (2.2 in.)
Bolt C: 23 mm (0.9 in.)
Bolt D: 12 mm (0.47 in.)

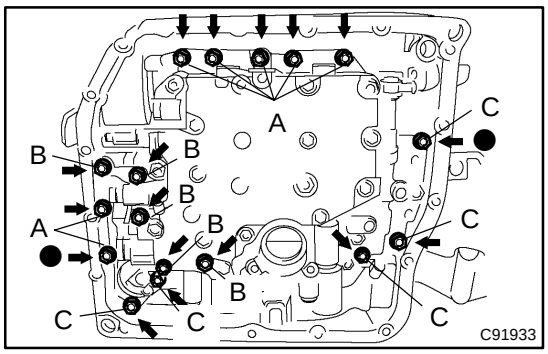

(c) Align the groove of the manual valve with the pin of the lever.

(d) Install the 17 bolts.
Torque: 11 N·m (110 kgf·cm, 8 ft·lbf)

NOTICE:

- **Push the valve body against the accumulator piston spring and the check ball body to install it.**
- **First, temporarily tighten the bolts marked by ● in the illustration because they are positioning bolts.**
  Bolt length:
  Bolt A: 25 mm (0.984 in.)
  Bolt B: 57 mm (2.244 in.)
  Bolt C: 41 mm (1.614 in.)

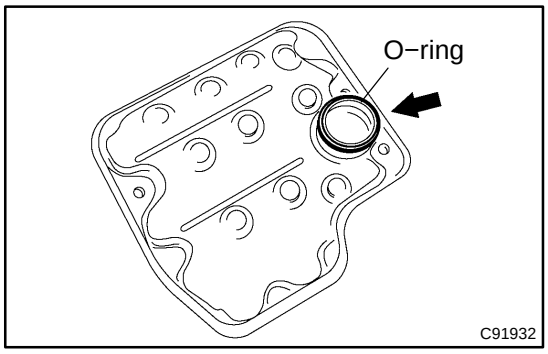

8. INSTALL VALVE BODY OIL STRAINER ASSY

(a) Coat a new O−ring with ATF.

(b) Install the O−ring to the oil strainer.

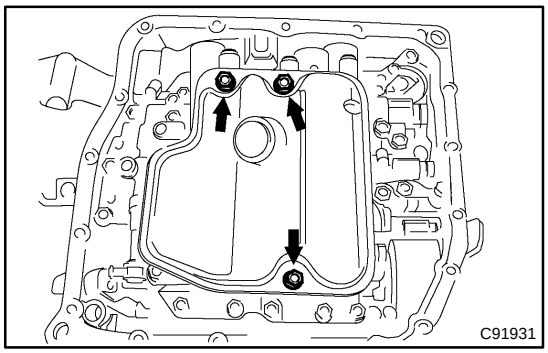

(c) Install the oil strainer with the 3 bolts.
Torque: 11 N·m (110 kgf·cm, 8 ft·lbf)

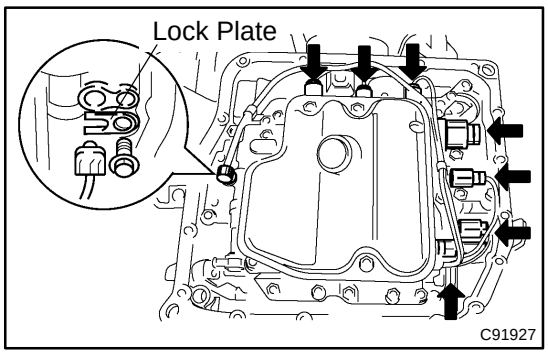

9. INSTALL TRANSMISSION WIRE

(a) Coat an O−ring with ATF.

(b) Install the ATF temperature sensor with the lock plate and bolt.
Torque: 6.6 N·m (67 kgf·cm, 58 in.·lbf)

(c) Connect the 7 shift solenoid valve connectors.

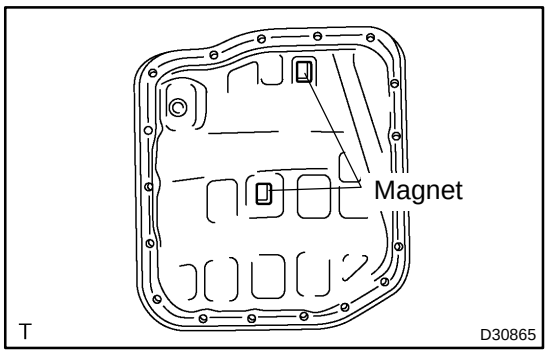

10. INSTALL AUTOMATIC TRANSAXLE OIL PAN SUB−ASSY

(a) Install the 2 magnets in the oil pan.

(b) Apply seal packing or equivalent to the 18 bolts.

Seal packing:
THREE BOND 2430 or equivalent

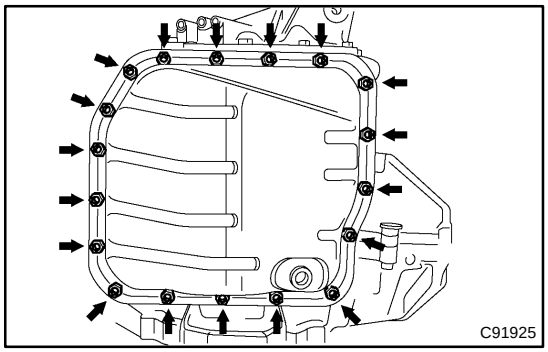

(c) Using a new gasket, install the oil pan with the 18 bolts to the transaxle case.

Torque: 7.8 N·m (80 kgf·cm, 69 in.·lbf)

NOTICE:

Since the bolts should be seal bolts, apply seal packing to the bolts and tighten them within 10 minutes of application.

11. ADD AUTOMATIC TRANSAXLE FLUID
Fluid type: ATF type T−IV
Capacity: 3.5 liters (3.7 US qts, 3.1 lmp. qts)

12. INSPECT AUTOMATIC TRANSAXLE FLUID (SEE PAGE 40−2)

13. INSTALL ENGINE UNDER COVER RH

14. RESET MEMORY (SEE PAGE 05−1251)

TRANSMISSION VALVE BODY ASSY (U250E)

4015B−03

REPLACEMENT

1. REMOVE ENGINE UNDER COVER RH

2. DRAIN AUTOMATIC TRANSAXLE FLUID

(a) Remove the drain plug and gasket, and drain the ATF.

(b) Install a new gasket and the drain plug.

Torque: 49 N·m (500 kgf·cm, 36 ft·lbf)

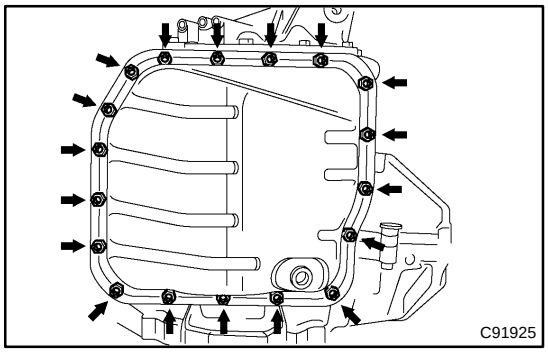

3. REMOVE AUTOMATIC TRANSAXLE OIL PAN SUB−ASSY

(a) Remove the 18 bolts, oil pan and gasket.

NOTICE:

Some fluid will remain in the oil pan. Remove all pan bolts, and carefully remove the oil pan assembly.

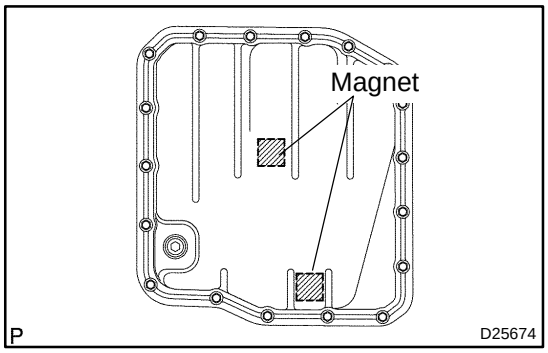

(b) Remove the 2 magnets from the oil pan.

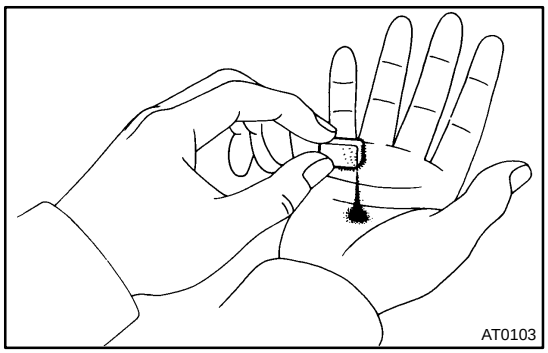

(c) Examine particles in the pan.

(1) Collect any steel chips with the removed magnets. Look carefully at the chips and particles in the pan and on the magnets to see the type of wear which might be found in the transaxle.

Steel (magnetic): bearing, gear and plate wear

Brass (non−magnetic): bearing wear

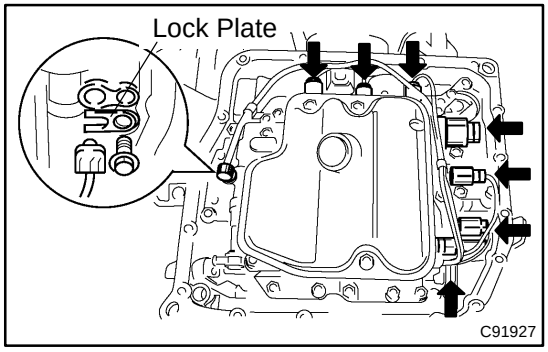

4. DISCONNECT TRANSMISSION WIRE

(a) Disconnect the 7 shift solenoid valve connectors.

(b) Remove the bolt and lock plate, and disconnect the ATF temperature sensor.

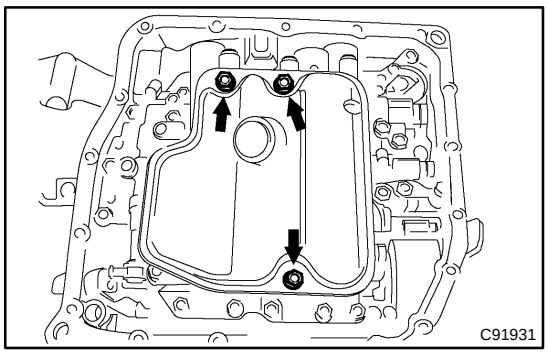

5. REMOVE VALVE BODY OIL STRAINER ASSY

(a) Remove the 3 bolts and oil strainer.

NOTICE:

Be careful as some fluid will come out of the oil strainer.

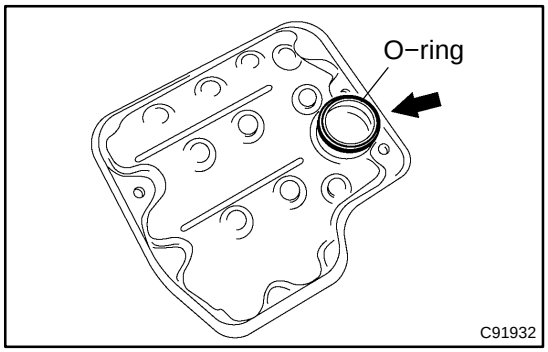

(b) Remove the O−ring from the oil strainer.

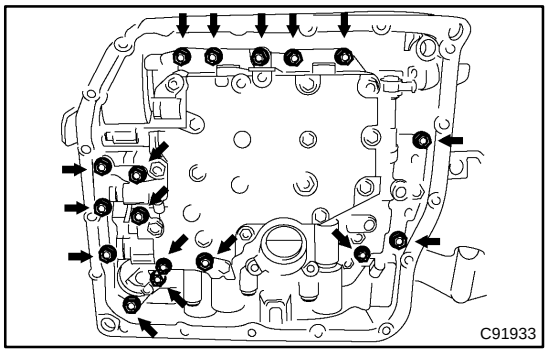

6. REMOVE TRANSMISSION VALVE BODY ASSY

(a) Support the valve body assy and remove the 17 bolts and the valve body assy.

NOTICE:

Be careful not to drop the check ball, spring and accumulator piston.

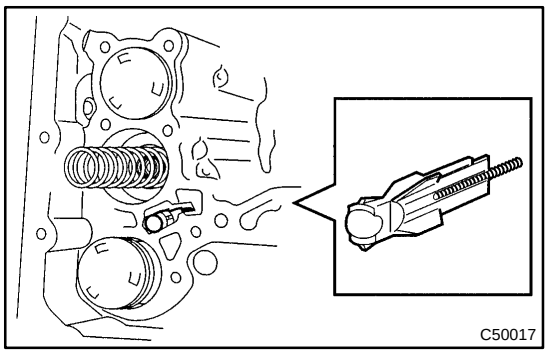

(b) Remove the check ball body and spring.

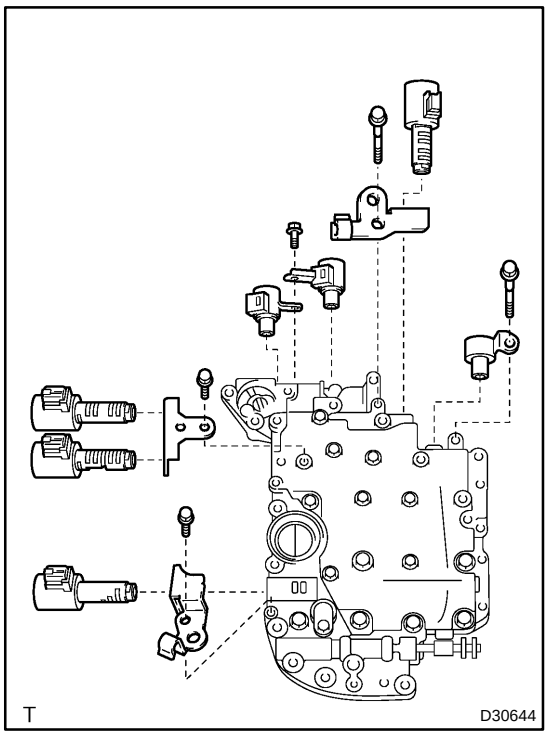

(c) Remove the 5 bolts and 7 shift solenoid valves.

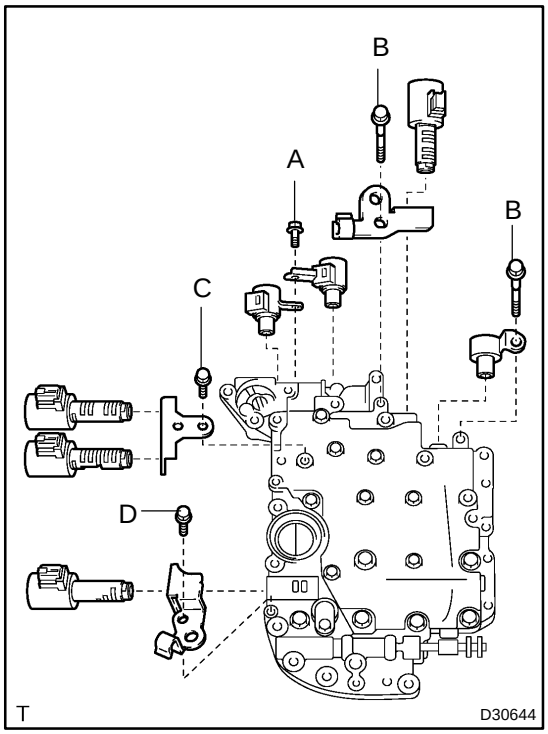

7. INSTALL TRANSMISSION VALVE BODY ASSY

(a) Install the 7 shift solenoid valves with the 5 bolts.

Torque:
Bolt A, B: 11 N·m (110 kgf·cm, 8 ft ·lbf)
Bolt C, D: 6.6 N·m (67 kgf·cm, 58 in.·lbf)
Bolt length:
Bolt A: 16 mm (0.63 in.)
Bolt B: 57 mm (2.2 in.)
Bolt C: 23 mm (0.9 in.)
Bolt D: 12 mm (0.47 in.)

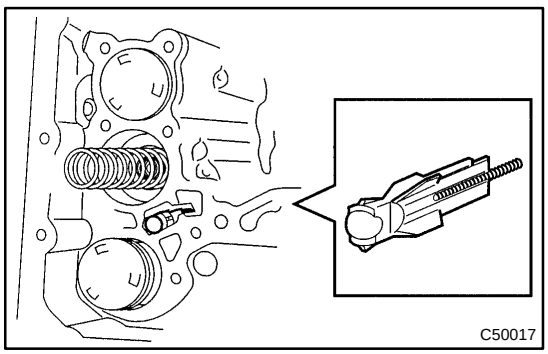

(b) Install the spring and check ball body.

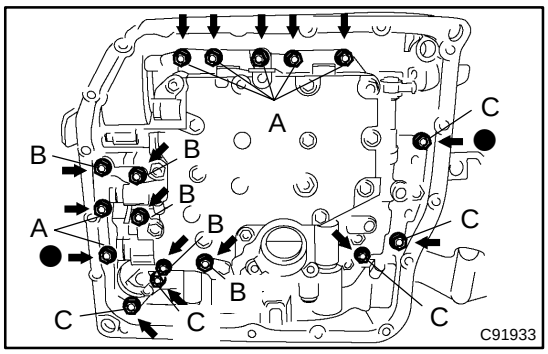

(c) Align the groove of the manual valve with the pin of the lever.

(d) Install the 17 bolts.

Torque: 11 N·m (110 kgf·cm, 8 ft·lbf)

NOTICE:

- **Push the valve body against the accumulator piston spring and the check ball body to install it.**
- **First, temporarily tighten the bolts marked by ● in the illustration because they are positioning bolts.**

Bolt length:
Bolt A: 25 mm (0.984 in.)
Bolt B: 57 mm (2.244 in.)
Bolt C: 41 mm (1.614 in.)

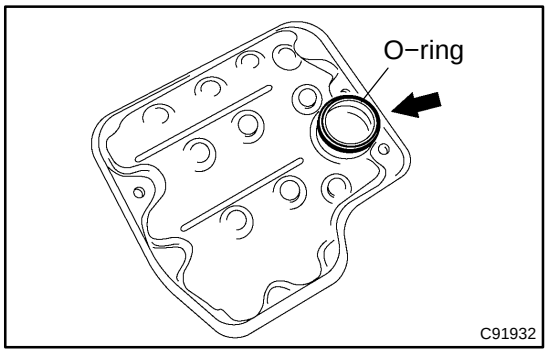

8. INSTALL VALVE BODY OIL STRAINER ASSY

(a) Coat a new O−ring with ATF.

(b) Install the O−ring to the oil strainer.

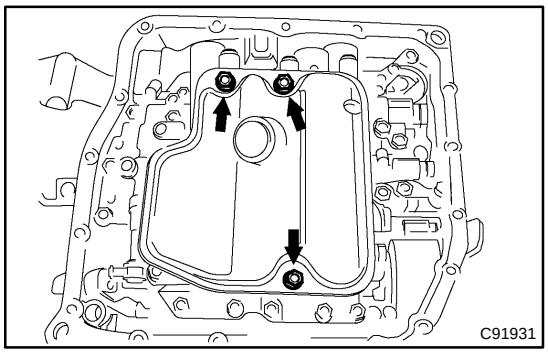

(c) Install the oil strainer with the 3 bolts.

Torque: 11 N·m (110 kgf·cm, 8 ft·lbf)

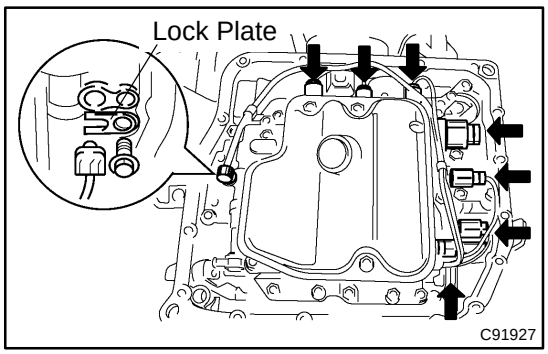

9. INSTALL TRANSMISSION WIRE

(a) Coat an O−ring with ATF.

(b) Install the ATF temperature sensor with the lock plate and bolt.

Torque: 6.6 N·m (67 kgf·cm, 58 in.·lbf)

(c) Connect the 7 shift solenoid valve connectors.

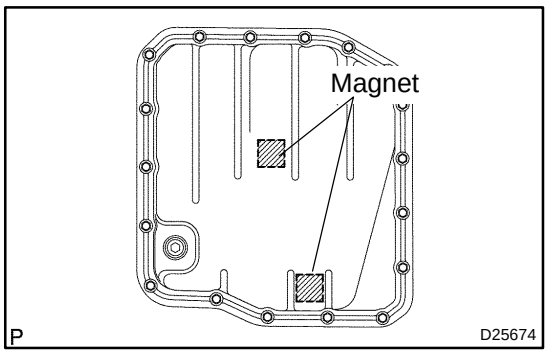

10. INSTALL AUTOMATIC TRANSAXLE OIL PAN SUB−ASSY

(a) Install the 2 magnets in the oil pan.

(b) Apply seal packing or equivalent to the 18 bolts.

Seal packing:
THREE BOND 2430 or equivalent

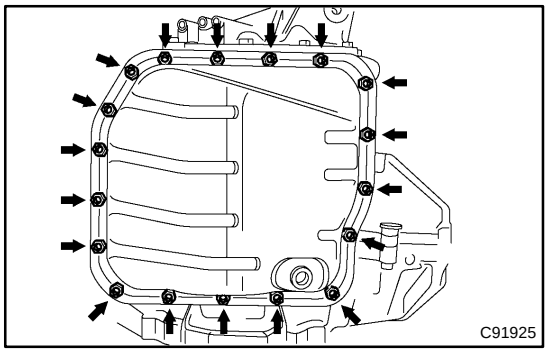

(c) Install the oil pan and a new gasket with the 18 bolts to the transaxle case.

Torque: 7.8 N·m (80 kgf·cm, 69 in.·lbf)

NOTICE:

Apply seal packing to the bolts and tighten them within 10 minutes of application.

11. ADD AUTOMATIC TRANSAXLE FLUID
Fluid type: ATF type T−IV
Capacity: 3.5 liters (3.7 US qts, 3.1 lmp. qts)

12. INSPECT AUTOMATIC TRANSAXLE FLUID (SEE PAGE 40−2)

13. INSTALL ENGINE UNDER COVER RH

14. RESET MEMORY

NOTICE:

Perform the RESET MEMORY (AT initialization) when replacing the automatic transmission assy, engine assy or ECM (see page 05−1123).

HINT:

RESET MEMORY can not be completed by only disconnecting the battery terminal.

FRONT DIFFERENTIAL OIL SEAL (U151E)

4010X−06

REPLACEMENT

1. REMOVE FRONT WHEELS

2. REMOVE ENGINE UNDER COVER RH

3. REMOVE ENGINE UNDER COVER LH

4. DRAIN AUTOMATIC TRANSAXLE FLUID

(a) Remove the drain plug, gasket and drain the ATF.

(b) Install a new gasket and the drain plug.

Torque: 49 N·m (500 kgf·cm, 36 ft·lbf)

5. REMOVE FRONT DRIVE SHAFT ASSY RH (SEE PAGE 30−8)

6. REMOVE FRONT DRIVE SHAFT ASSY LH (SEE PAGE 30−8)

SST 09520−01010, 09520−24010 (09520−32040)

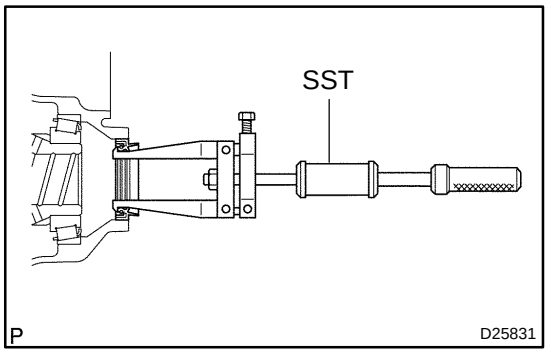

7. REMOVE TRANSAXLE HOUSING OIL SEAL

(a) Using SST, pull out the oil seal.

SST 09308−00010

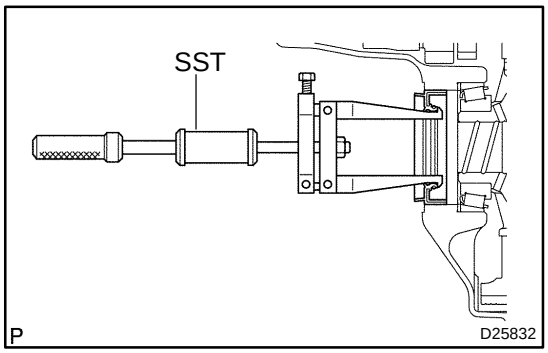

8. REMOVE DIFFERENTIAL SIDE BEARING RETAINER OIL SEAL

(a) Using SST, pull out the oil seal.

SST 09308−00010

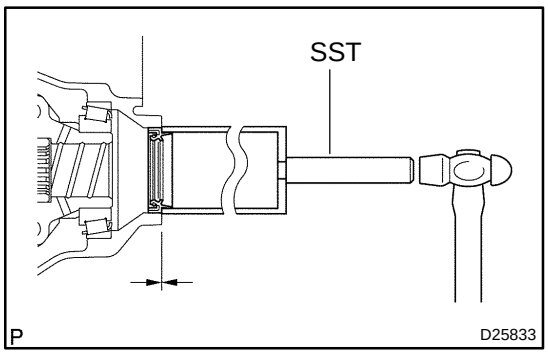

9. INSTALL DIFFERENTIAL SIDE BEARING RETAINER OIL SEAL

(a) Using SST and a hammer, drive in a new oil seal.

SST 09316−60011 (09316−00011)

Oil seal drive in depth:

0 ± 0.5 mm (0 ± 0.020 in.)

(b) Coat the lip of the oil seal with MP grease.

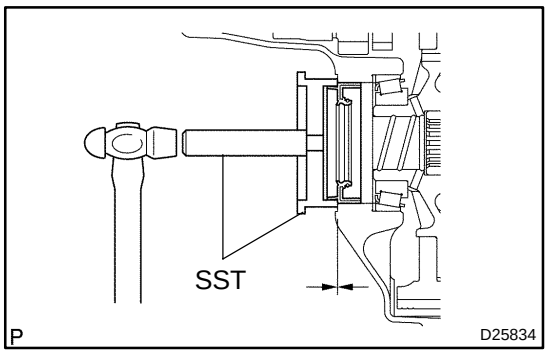

10. INSTALL TRANSAXLE HOUSING OIL SEAL

(a) Using SST and a hammer, drive in a new oil seal.
SST 09223−15020, 09950−70010 (09951−07150)
Oil seal drive in depth:
0 ± 0.5 mm (0 ± 0.020 in.)

(b) Coat the lip of the oil seal with MP grease.

11. INSTALL FRONT DRIVE SHAFT ASSY LH (SEE PAGE 30−8)
12. INSTALL FRONT DRIVE SHAFT ASSY RH (SEE PAGE 30−8)
13. INSTALL ENGINE UNDER COVER LH
14. INSTALL ENGINE UNDER COVER RH
15. INSTALL FRONT WHEELS
16. ADD AUTOMATIC TRANSAXLE FLUID
Fluid type: ATF type T−IV
Capacity: 3.5 liters (3.7 US qts, 3.1 lmp. qts)
17. INSPECT AUTOMATIC TRANSAXLE FLUID (SEE PAGE 40−2)

FRONT DIFFERENTIAL OIL SEAL (U250E)

40065−11

REPLACEMENT

1. REMOVE FRONT WHEELS

2. REMOVE ENGINE UNDER COVER RH

3. REMOVE ENGINE UNDER COVER LH

4. DRAIN AUTOMATIC TRANSAXLE FLUID

(a) Remove the drain plug and gasket, and drain the ATF.

(b) Install a new gasket and the drain plug.

Torque: 49 N·m (500 kgf·cm, 36 ft·lbf)

5. REMOVE FRONT DRIVE SHAFT ASSY RH (SEE PAGE 30−8)

6. REMOVE FRONT DRIVE SHAFT ASSY LH (SEE PAGE 30−8)

SST 09520−01010, 09520−24010 (09520−32040)

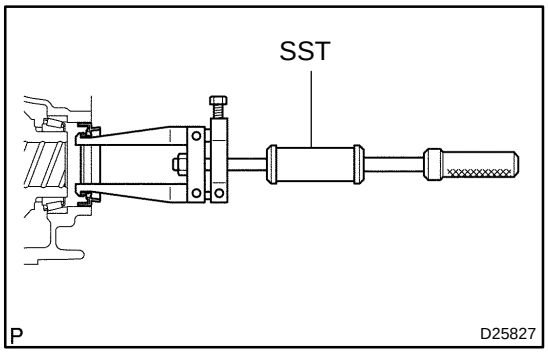

7. REMOVE TRANSAXLE HOUSING OIL SEAL

(a) Using SST, pull out the oil seal.

SST 09308−00010

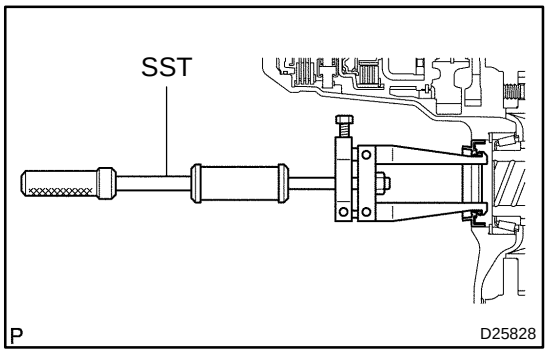

8. REMOVE DIFFERENTIAL SIDE BEARING RETAINER OIL SEAL

(a) Using SST, pull out the oil seal.

SST 09308−00010

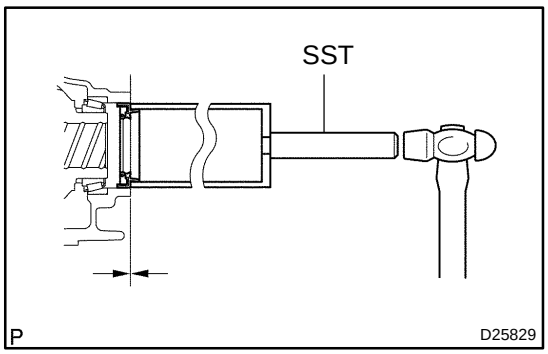

9. INSTALL TRANSAXLE HOUSING OIL SEAL

(a) Using SST and a hammer, drive in a new oil seal.

SST 09316−60011 (09316−00011)

Oil seal drive in depth:

0 ± 0.5 mm (0 ± 0.020 in.)

(b) Coat the lip of the oil seal with MP grease.

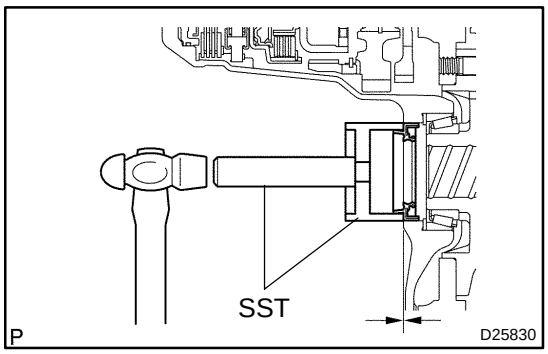

10. INSTALL DIFFERENTIAL SIDE BEARING RETAINER OIL SEAL

(a) Using SST and a hammer, drive in a new oil seal.
SST 09649−17010, 09950−70010 (09951−07150)
Oil seal drive in depth:
0 ± 0.5 mm (0 ± 0.020 in.)

(b) Coat the lip of the oil seal with MP grease.

11. INSTALL FRONT DRIVE SHAFT ASSY LH (SEE PAGE 30−8)
12. INSTALL FRONT DRIVE SHAFT ASSY RH (SEE PAGE 30−8)
13. INSTALL ENGINE UNDER COVER LH
14. INSTALL ENGINE UNDER COVER RH
15. INSTALL FRONT WHEELS
Torque: 103 N·m (1,050 kgf·cm, 76 ft·lbf)
16. ADD AUTOMATIC TRANSAXLE FLUID
Fluid type: ATF type T−IV
Capacity: 3.5 liters (3.7 US qts, 3.1 lmp. qts)
17. INSPECT AUTOMATIC TRANSAXLE FLUID (SEE PAGE 40−2)

SHIFT LOCK SYSTEM (ATM)

4010Y−03

ON−VEHICLE INSPECTION

1. CHECK SHIFT LOCK OPERATION

(a) Shift the shift lever to P position.
(b) Turn the ignition switch to LOCK position.
(c) Check that the shift lever cannot be shifted to any other positions other than P.
(d) Turn the ignition switch ON, depress the brake pedal and check that the shift lever can be shifted to any other positions.

If operation can not be done as specified, inspect the shift lock control unit.

2. CHECK SHIFT LOCK RELEASE BUTTON OPERATION

(a) Using a screwdriver, remove the shift lock release button cover.
(b) When operating the shift lever with pressing the shift lock release button and being the ignition key in ACC or ON, check that the lever can be shifted to any other position.

If operation can not be done as specified, check the shift lever assy installation condition.

3. CHECK KEY INTERLOCK OPERATION

(a) Turn the ignition switch ON.
(b) Depress the brake pedal and shift the shift lever to any other positions other than P.
(c) Check that the ignition key cannot be turned to LOCK position.
(d) Shift the shift lever to P position, turn the ignition key to LOCK position and check that the ignition key can be removed.

If operation cannot be done as specified, inspect the shift lock control unit.

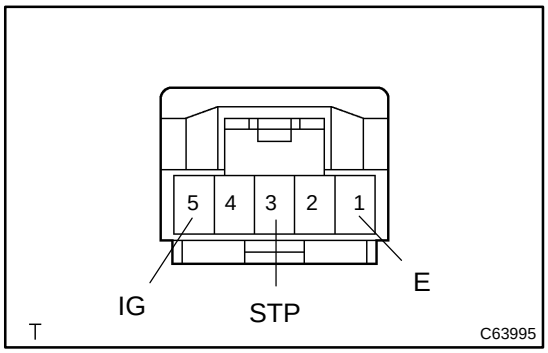

4. INSPECT SHIFT LOCK CONTROL COMPUTER

(a) Using a voltmeter, measure the voltage at each terminal.

HINT:

Do not disconnect the shift lock control unit connector.

Terminal	Measuring Condition	Voltage (V)
5 (IG) − 1 (E)	Ignition switch ON	10 − 14
5 (IG) − 1 (E)	Ignition switch OFF	0
3 (STP) − 1 (E)	Depress brake pedal	10 − 14
3 (STP) − 1 (E)	Release brake pedal	0

If the result is not as specified, replace the shift lock control unit.

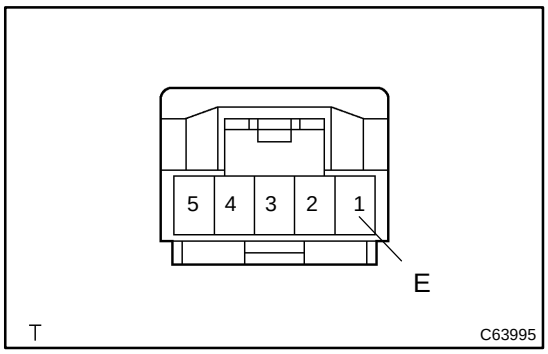

(b) Using an ohmmeter, measure the resistance between terminal E (1) and body ground.

Terminal	Measuring Condition	Voltage (V)
1 (E) − Body ground	Always	Continuity

If the result is not as specified, replace the shift lock control unit.

FLOOR SHIFT ASSY (ATM)

COMPONENTS

4010Z−03

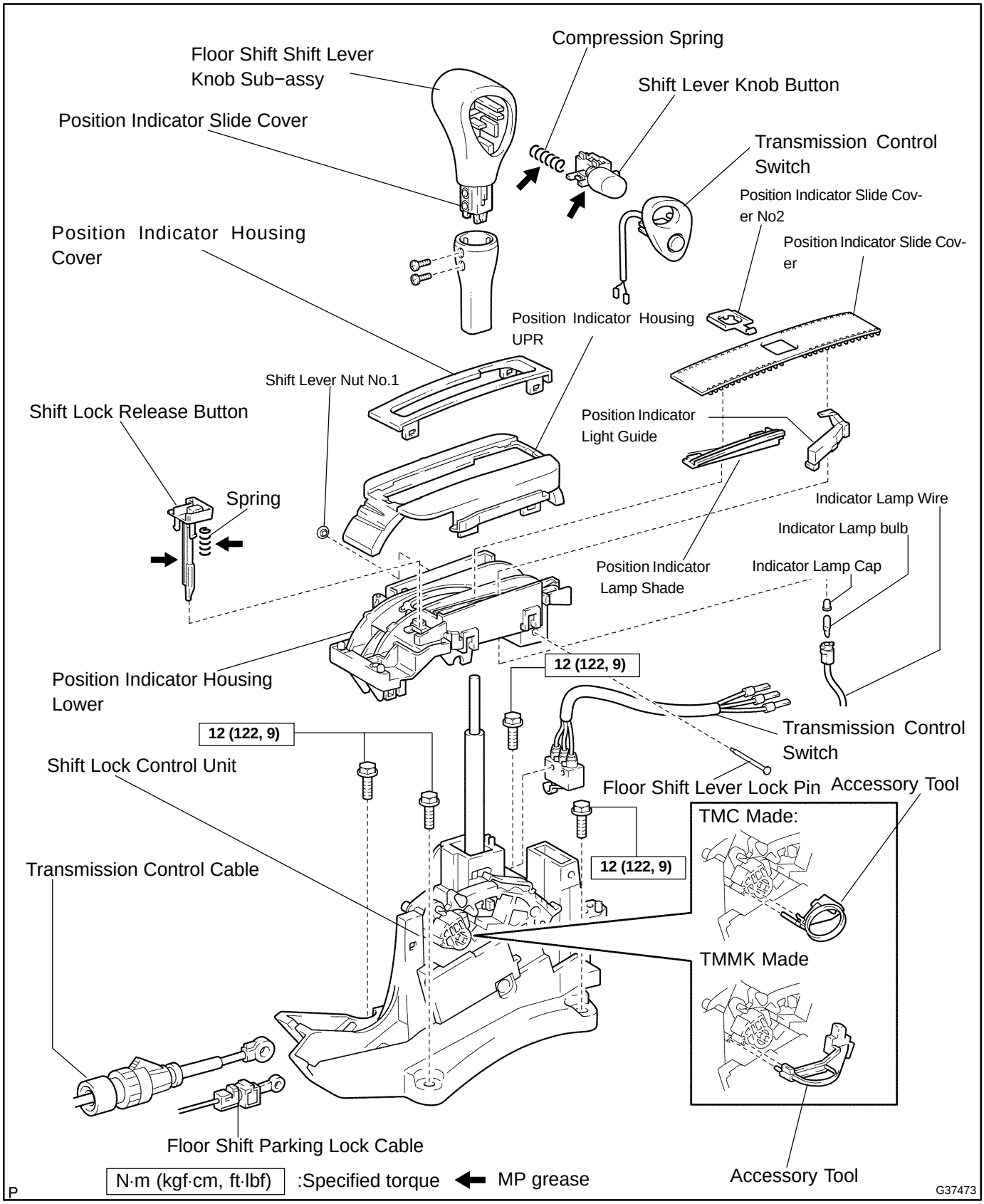

401EK−01

OVERHAUL

1. REMOVE CONSOLE BOX CARPET (SEE PAGE 71−16)
2. REMOVE RR CONSOLE BOX (SEE PAGE 71−16)
3. REMOVE FRONT ASH RECEPTACLE ASSY (W/ ASHTRAY) (SEE PAGE 71−16)
4. REMOVE CONSOLE BOX FRONT (SEE PAGE 71−16)
5. REMOVE AIR DUCT REAR NO.1 (SEE PAGE 71−16)
6. REMOVE AIR DUCT REAR NO.2 (SEE PAGE 71−16)
7. REMOVE CONSOLE BOX DUCT NO.1 (SEE PAGE 71−16)

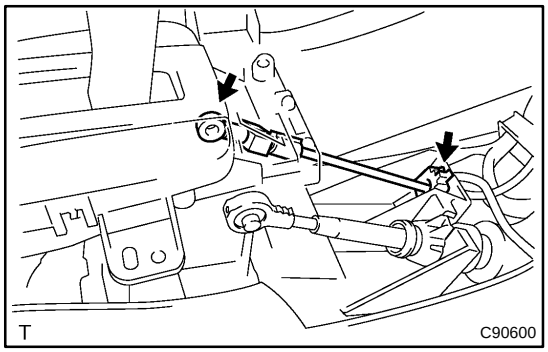

8. DISCONNECT FLOOR SHIFT PARKING LOCK CABLE ASSY

(a) Disconnect the floor shift parking lock cable from the floor shift assy.

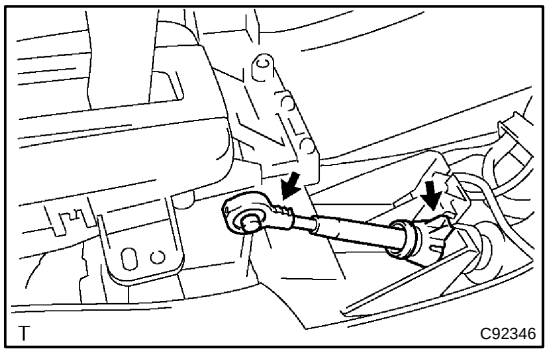

9. DISCONNECT TRANSMISSION CONTROL CABLE ASSY

(a) Disconnect the floor shift cable transmission control shift from the floor shift assy.

10. REMOVE FLOOR SHIFT ASSY

(a) Disconnect the shift lock control computer connector.

(b) Disconnect the transmission control switch connector.

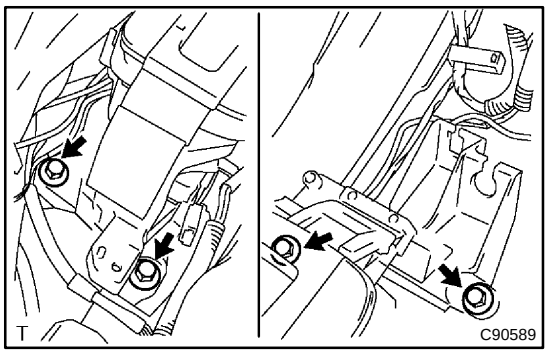

(c) Remove the 4 bolts and transmission floor shift assy.

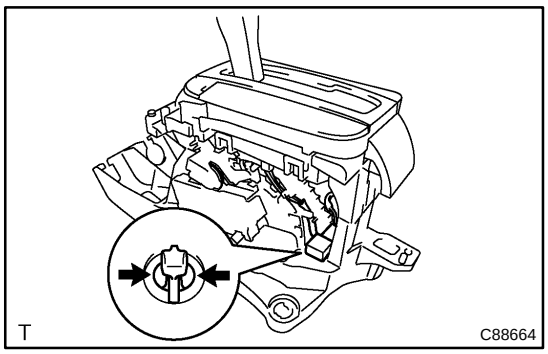

11. REMOVE INDICATOR LAMP WIRE SUB−ASSY

(a) Releasing the lock by pressing the slick, disconnect the indicator lamp wire connector from the shift lever plate.

(b) Disconnect the indicator lamp wire sub−assy from the position indicator housing.

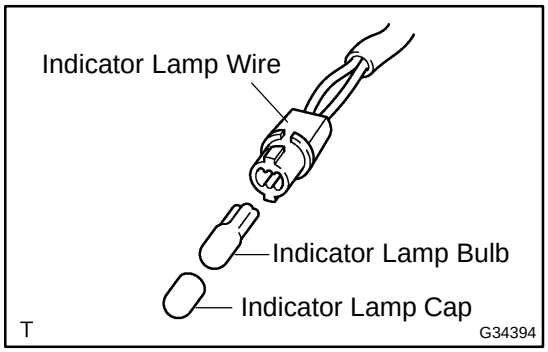

(c) Remove the indicator lamp cap and indicator lamp bulb from the indicator lamp wire sub−assy.

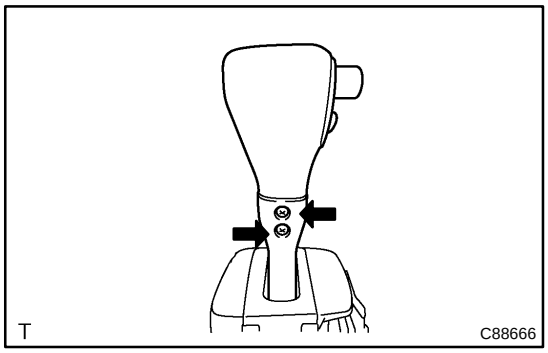

12. REMOVE SHIFT LEVER KNOB SUB−ASSY

(a) Remove the 2 screws and shift lever knob from the shift lever.

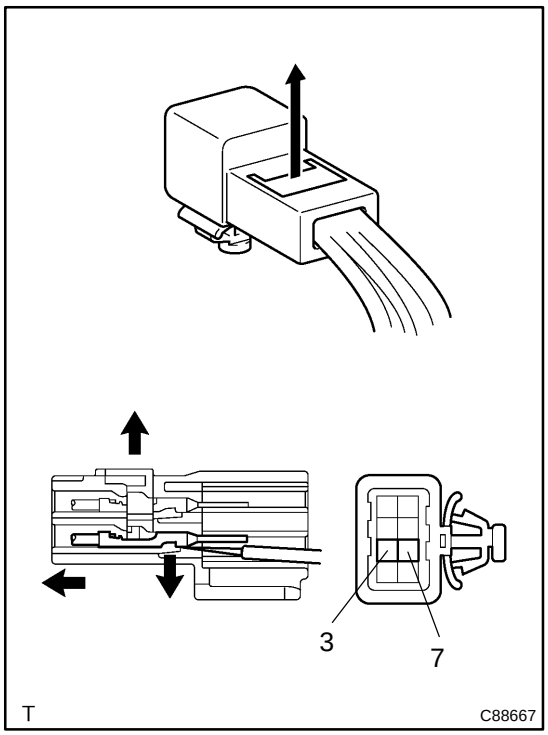

(b) Using a screwdriver, release the stopper of the connector.

(c) Using a small screwdriver, disengage the locking lug of the terminals 3 and 7, and pull out the terminals from the rear.

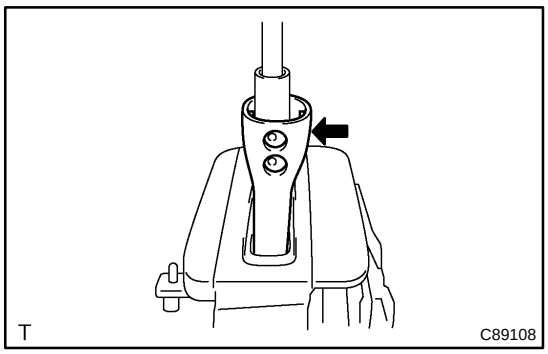

13. REMOVE POSITION INDICATOR SLIDE COVER

(a) Remove the position indicator slide cover from the floor shift assy.

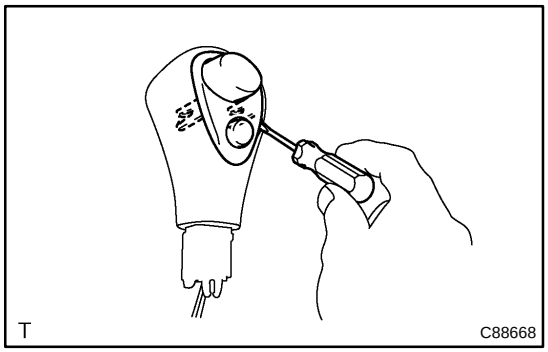

14. REMOVE TRANSMISSION CONTROL SWITCH

(a) Using a screwdriver, remove the transmission control switch from the shift lever knob.

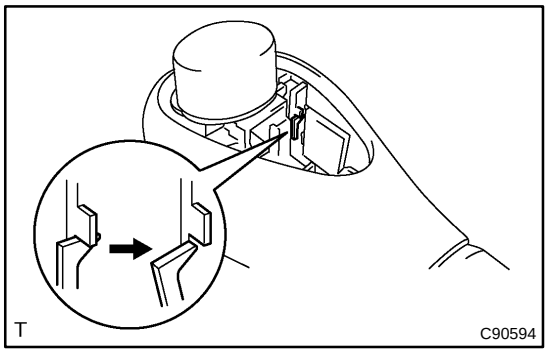

15. REMOVE SHIFT LEVER KNOB BUTTON

(a) Using a screwdriver, release the claw and remove the shift lever knob button.

(b) Remove the compression spring.

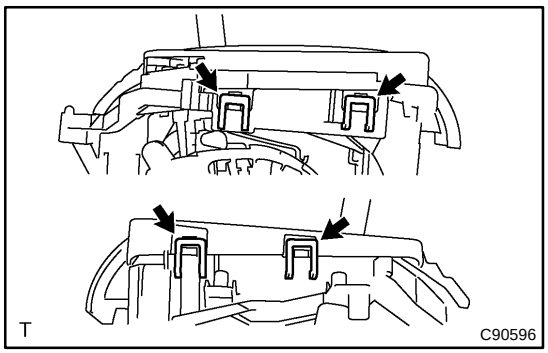

16. REMOVE POSITION INDICATOR HOUSING UPPER

(a) Using a screwdriver, disengage the 4 claws and remove the position indicator housing upper from the floor shift assy.

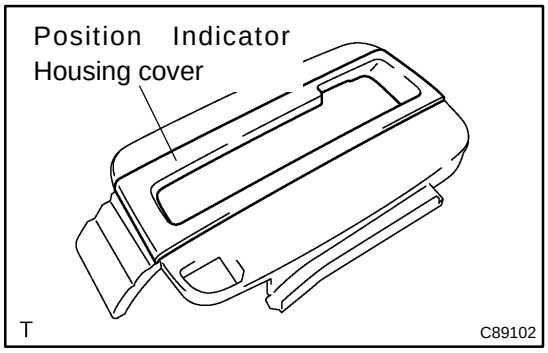

17. REMOVE POSITION INDICATOR HOUSING COVER

(a) Using a screwdriver, remove the position indicator housing cover from the position indicator housing upper.

18. REMOVE POSITION INDICATOR SLIDE COVER

(a) Remove the position indicator slide cover from the floor shift assy.

(b) Remove the position indicator slide cover No.2 from the floor shift assy.

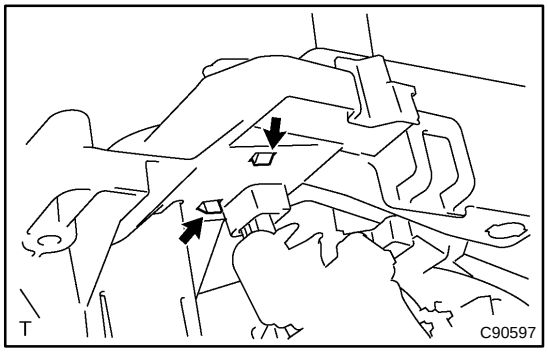

19. REMOVE SHIFT LOCK RELEASE BUTTON

(a) While pressing the 2 claws, remove the shift lock release button and shift lock release spring.

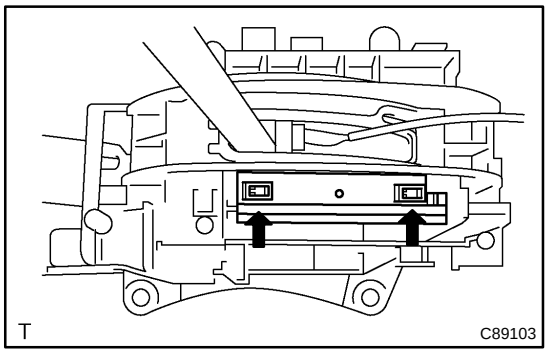

20. REMOVE POSITION INDICATOR LIGHT GUIDE

(a) Disengage the 2 claws and remove the position indicator lamp shade from the position indicator housing lower.

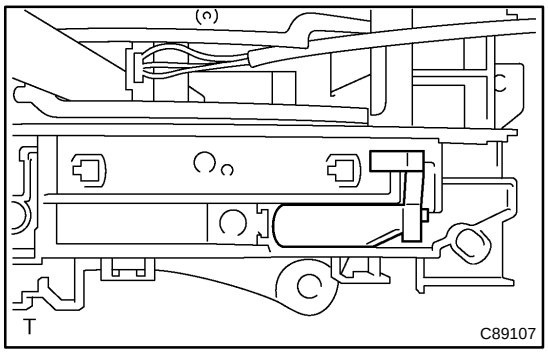

(b) Remove the position indicator light guide from the position indicator housing lower.

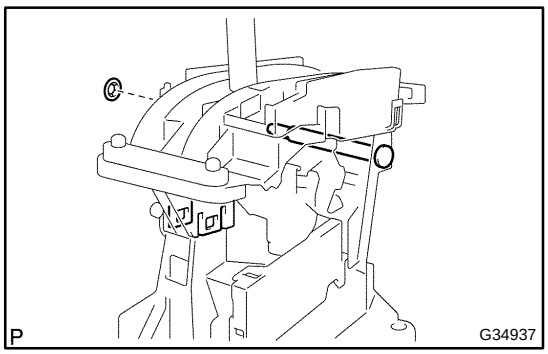

21. REMOVE POSITION INDICATOR HOUSING LOWER

(a) Using a screwdriver, pry up the shift lever nut No.1.

(b) Using a screwdriver, pry up the floor shift lever lock pin.

(c) Using a screwdriver release the 2 claws and remove the position indicator housing lower from the floor shift assy.

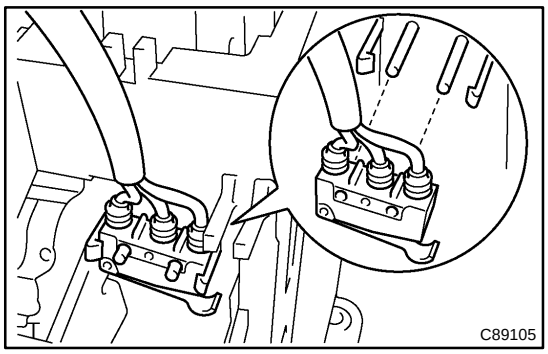

22. REMOVE TRANSMISSION CONTROL SWITCH

(a) Using a screwdriver, remove the transmission control switch from the floor shift assy.

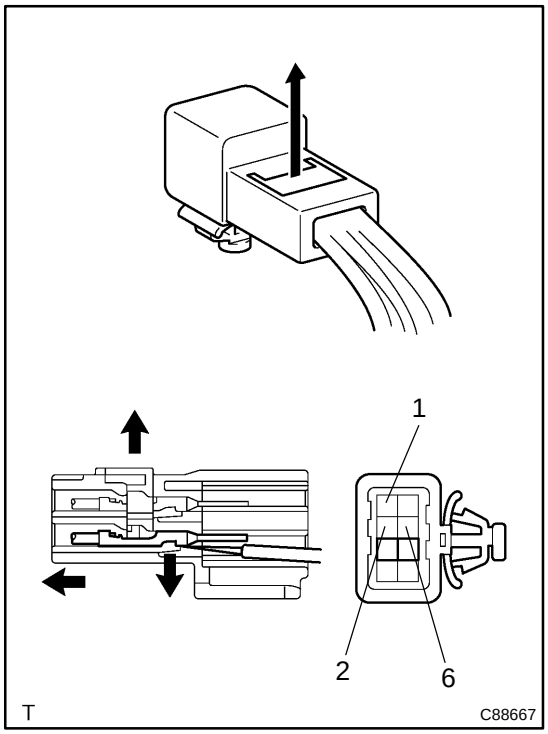

(b) Using a screwdriver, release the stopper of the connector.

(c) Using a small screwdriver, disengage the locking lug of the terminals 1 , 2 and 6 and pull the terminals out from the rear.

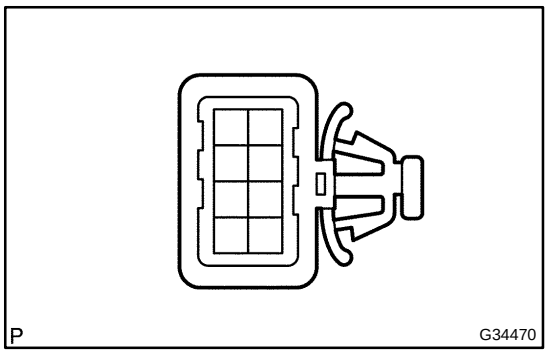

23. INSTALL TRANSMISSION CONTROL SWITCH

(a) Install the 3 terminals into the indicator lamp wire connector.

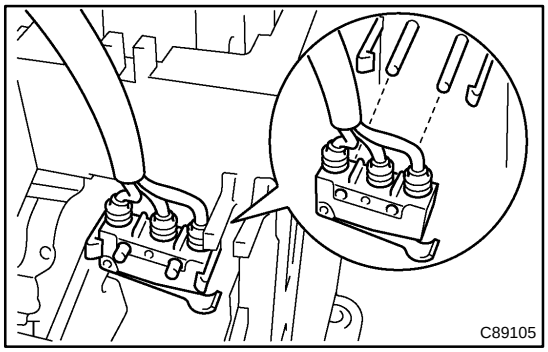

(b) Install the transmission control switch to the floor shift assy.

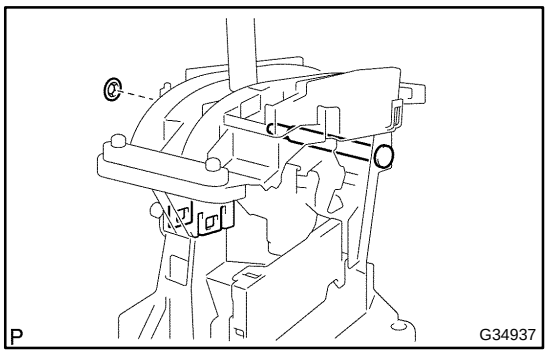

24. INSTALL POSITION INDICATOR HOUSING LOWER

(a) Install the position indicator housing lower with the shift lever lock pin and a new shift lever nut No.1.

HINT:

Ensure that the claws fit tightly.

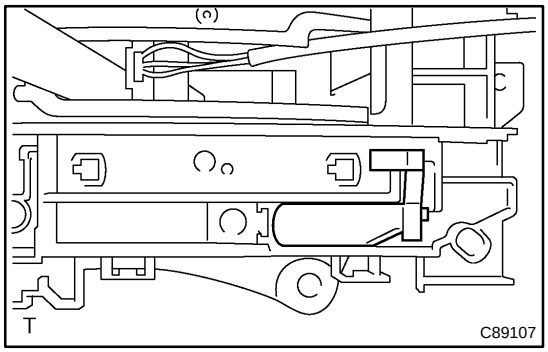

25. INSTALL POSITION INDICATOR LIGHT GUIDE

(a) Install the position indicator light guide to the position indicator housing lower.

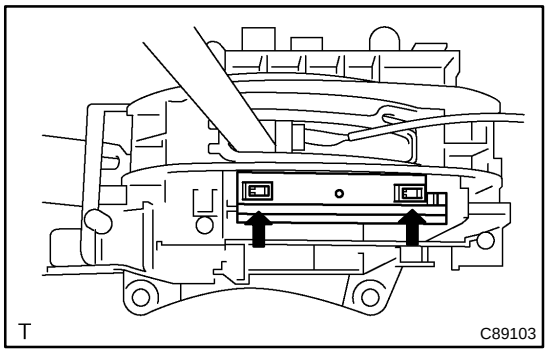

(b) Install the position indicator lamp shade to the position indicator housing lower.

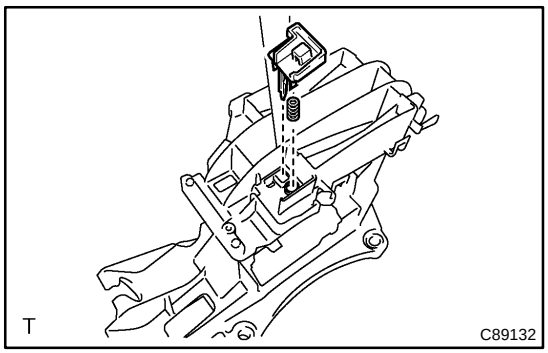

26. INSTALL SHIFT LOCK RELEASE BUTTON

(a) Apply MP grease to the shift lock release spring and shift lock release button.

(b) Install the shift lock release button and shift lock release spring to the position indicator housing lower.

HINT:

Ensure that the claws fit tightly.

27. INSTALL POSITION INDICATOR SLIDE COVER

(a) Install the position indicator slide cover No.2 to the position indicator.

(b) Install the position indicator slide cover to the floor shift assy.

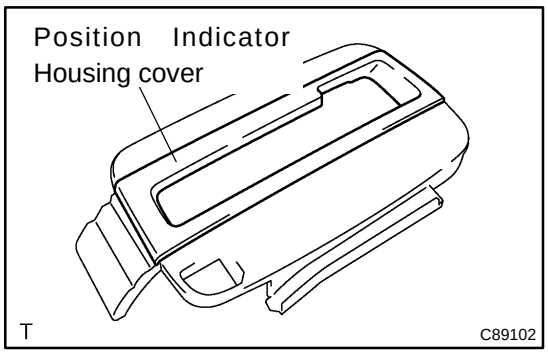

28. INSTALL POSITION INDICATOR HOUSING COVER

(a) Install the position indicator housing cover to the position indicator housing upper.

HINT:

Ensure that the claws fit tightly.

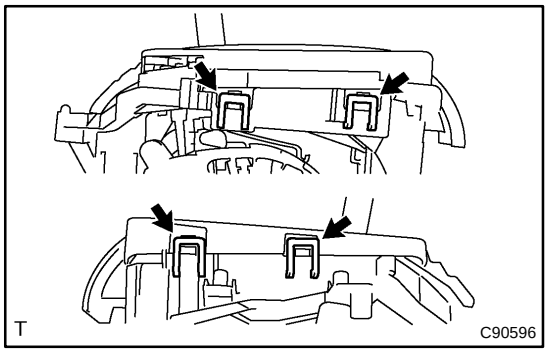

29. INSTALL POSITION INDICATOR HOUSING UPPER

(a) Install the control position indicator housing upper.

HINT:

Ensure that the claws fit tightly.

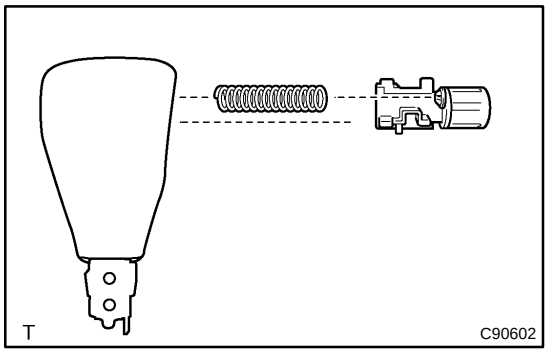

30. INSTALL SHIFT LEVER KNOB BUTTON

(a) Apply MP grease to the shift lever knob button and compression spring and install them to the shift lever knob.

HINT:

Ensure that the claws fit tightly.

31. INSTALL TRANSMISSION CONTROL SWITCH

(a) Install the transmission control switch to the shift lever knob.

HINT:

Ensure that the claws fit tightly.

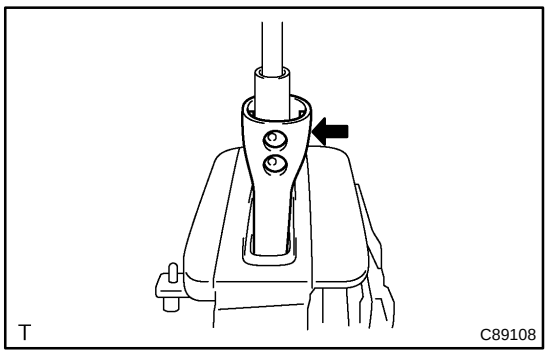

32. INSTALL POSITION INDICATOR SLIDE COVER

(a) Install the position indicator slide cover to the floor shift assy.

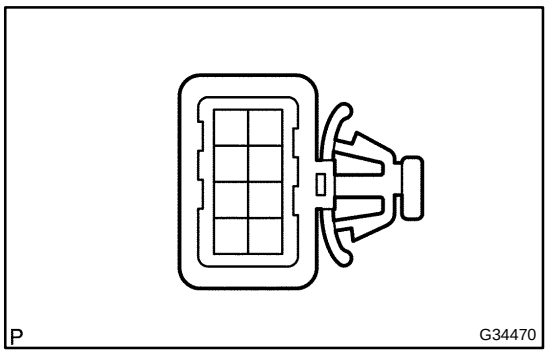

33. INSTALL SHIFT LEVER KNOB SUB−ASSY

(a) Install the 2 terminals into the indicator lamp wire connector.

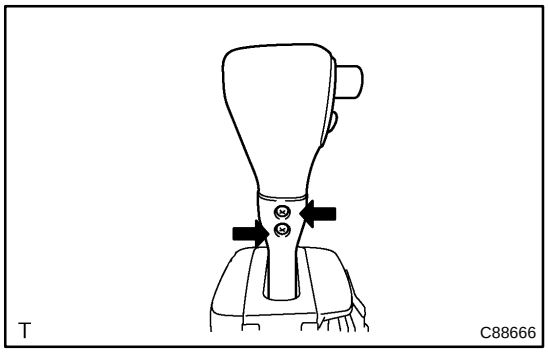

(b) Install the shift lever knob to the shift lever with 2 screws.

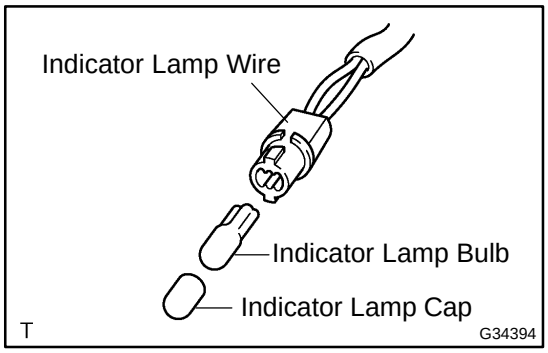

34. INSTALL INDICATOR LAMP WIRE SUB−ASSY

(a) Install the indicator lamp bulb and indicator lamp cap to the indicator lamp wire.

(b) Install the indicator lamp wire to the position indicator housing lower.

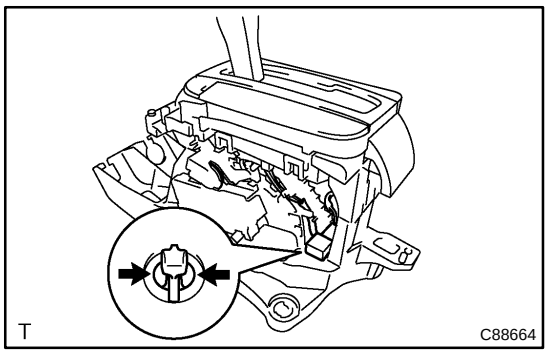

(c) Install the indicator lamp wire harness and connector as shown in the illustration.

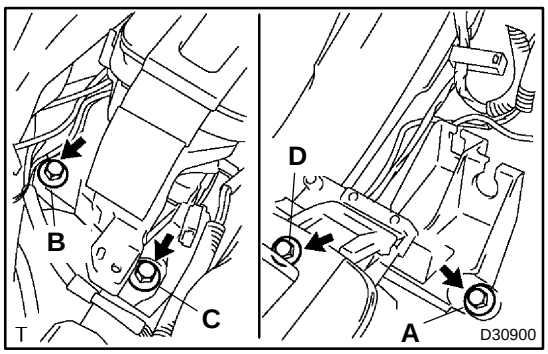

35. INSTALL FLOOR SHIFT ASSY

(a) Install the floor shift assy to the vehicle with the 4 bolts.
Torque: 12 N·m (122 kgf·cm, 9 ft·lbf)

HINT:

Tighten them in the order, A, B, C and D.

(b) Connect the transmission control switch connector.

(c) Connect the shift lock control computer connector.

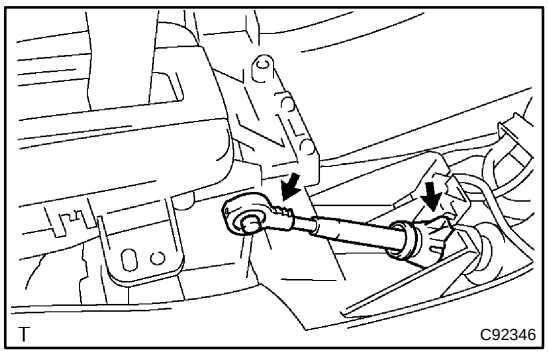

36. CONNECT TRANSMISSION CONTROL CABLE ASSY

(a) Connect the floor shift cable to the floor shift assy.

HINT:

- Install it with the uneven surface facing to up.
- Ensure that the claws fit tightly.

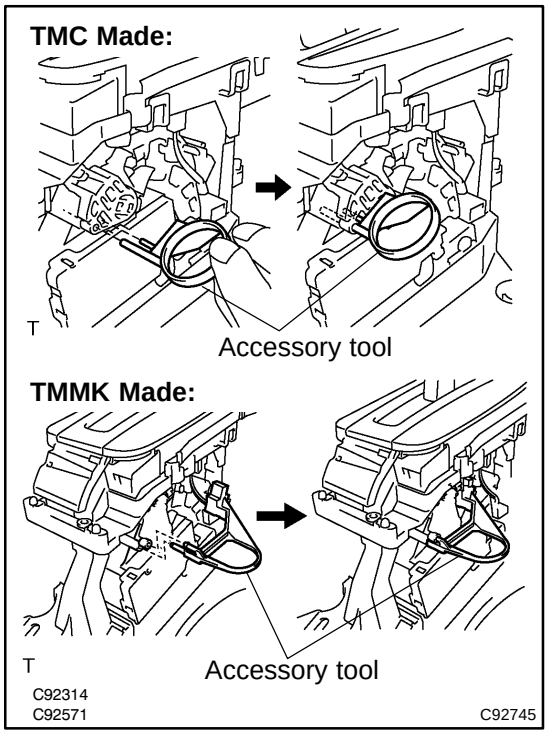

37. CONNECT FLOOR SHIFT PARKING LOCK CABLE ASSY

(a) Set the accessory tool.

(1) Shift the shift lever to P position and turn the ignition switch to the LOCK position. (TMC made)

(2) Shift the shift lever to N position and turn the ignition switch to the ACC. position (TMMK made)

(3) Set the accessory tool to the shift lock control unit assy as shown in the illustration.

Accessory tool parts No.:

TMC Made: 33693−33010

TMMK Made: 33693−06010

HINT:

Only in the case of reusing the shift lock control unit assy.

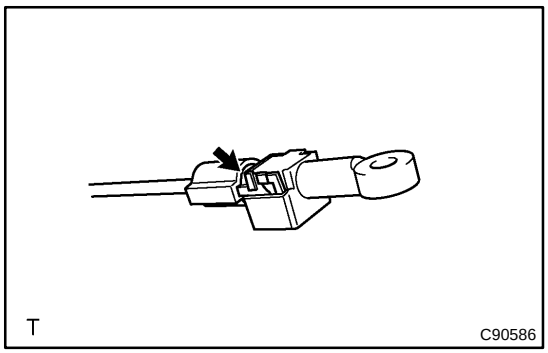

(b) Using a screwdriver, unlock the claw of the lock key of automatic adjustment part.

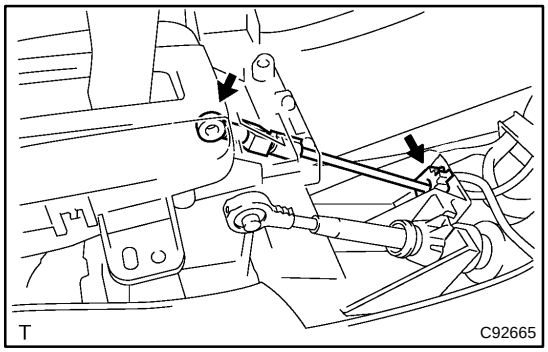

(c) Insert the lever pin into the hole in the floor shift parking lock cable.

HINT:

Ensure that the claws fit tightly.

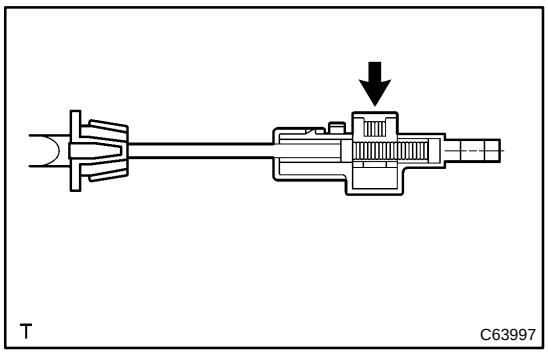

(d) Lock the lock key.

HINT:

- At this time, the shift lever should be in P position and the ignition key should be set to LOCK position. (TMC Made)
- At this time, the shift lever should be in N position and the ignition key should be set to ACC position. (TMMK Made)

(e) Remove the accessory tool.

Accessory tool parts NO.:
TMC Made: 33693−33010
TMMK Made: 33693−06010

38. CHECK KEY INTERLOCK OPERATION (SEE PAGE 40−51)
39. CHECK SHIFT LOCK OPERATION (SEE PAGE 40−51)
40. CHECK SHIFT LOCK RELEASE BUTTON OPERATION (SEE PAGE 40−51)
41. INSTALL CONSOLE BOX DUCT NO.1 (SEE PAGE 71−16)
42. INSTALL AIR DUCT REAR NO.2 (SEE PAGE 71−16)
43. INSTALL AIR DUCT REAR NO.1 (SEE PAGE 71−16)
44. INSTALL CONSOLE BOX FRONT (SEE PAGE 71−16)
45. INSTALL FRONT ASH RECEPTACLE ASSY (W/ ASHTRAY) (SEE PAGE 71−16)
46. INSTALL RR CONSOLE BOX (SEE PAGE 71−16)
47. INSTALL CONSOLE BOX CARPET (SEE PAGE 71−16)

40111−03

ADJUSTMENT

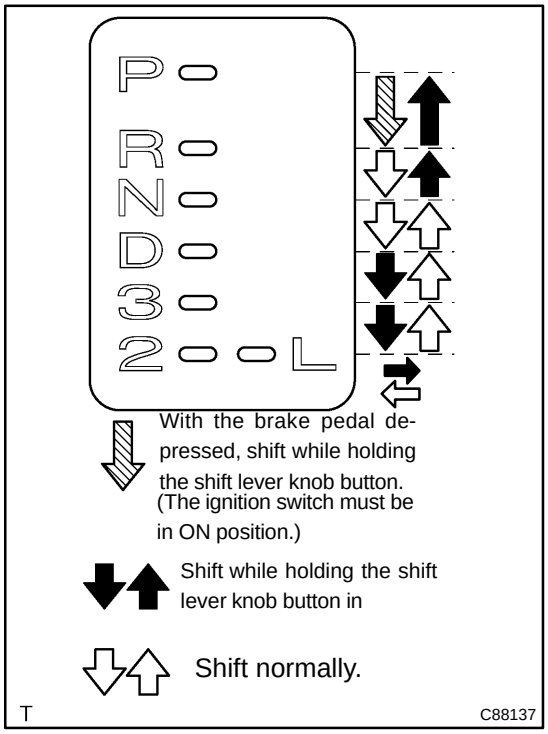

1. INSPECT SHIFT LEVER POSITION

(a) When shifting the shift lever to each position, make sure that it moves smoothly, and the position indicator displays correctly.

The positions which can be shifted without pressing the shift lever knob button

R → N → D , L → 2 → 3 → D → N

The positions which can be operated only while pressing the shift lever knob button

D → 3 → 2 → L , N → R → P

The positions which can be operated only while pressing the shift lever knob button, ignition switch ON and brake pedal depressed

P → R

(b) Start the engine and make sure that the vehicle moves forward when shifting the lever from N to D position, and moves rearward when shifting to R position.

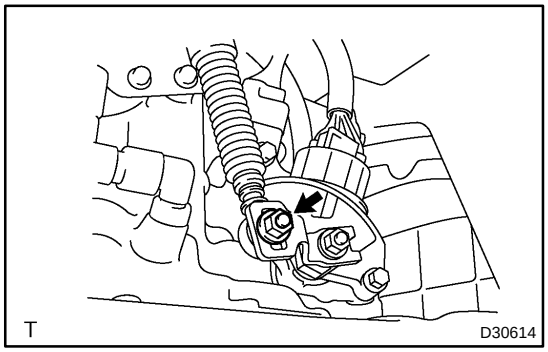

2. ADJUST SHIFT LEVER POSITION

(a) Loosen the nut on the control shaft lever.

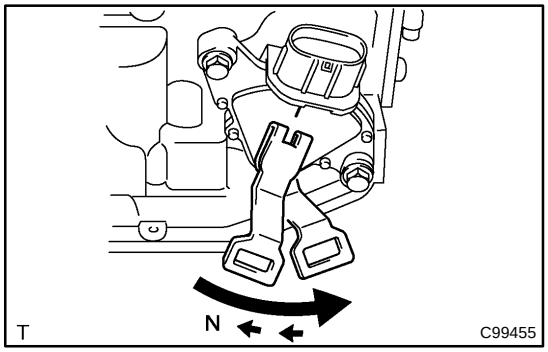

(b) Push the control shaft fully downward.

(c) Return the control shaft lever 2 notches to N position.

(d) Set the shift lever to N position.

(e) While holding the shift lever lightly toward the R position side, tighten the shift lever nut.

Torque: 14.7 N·m (150 kgf·cm, 10 ft·lbf)

(f) Start the engine and make sure that the vehicle moves forward when shifting the lever from N to D position and moves rearward when shifting it to R position.

TRANSMISSION CONTROL CABLE ASSY (ATM)

401EL−01

REPLACEMENT

1. DISCONNECT BATTERY NEGATIVE TERMINAL
2. REMOVE INSTRUMENT PANEL SAFETY PAD SUB−ASSY (SEE PAGE 71−16)
3. REMOVE AIR CONDITIONING RADIATOR ASSY (SEE PAGE 55−34)
4. REMOVE AIR BAG ECU ASSY (SEE PAGE 60−59)
5. REMOVE AIR CLEANER ASSY (SEE PAGE 14−29) or (SEE PAGE 14−164)
6. REMOVE INTAKE AIR CONNECTOR SUB−ASSY (SEE PAGE 14−29) or (SEE PAGE 14−164)
7. REMOVE EXHAUST PIPE ASSY (SEE PAGE 15−3)

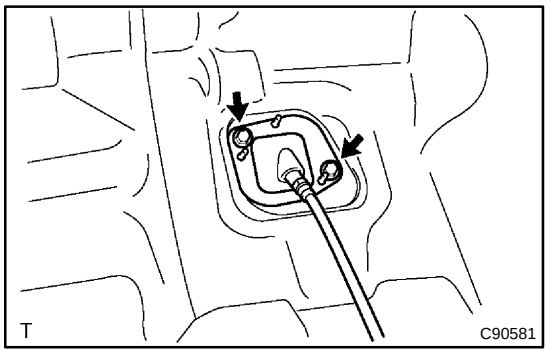

8. REMOVE TRANSMISSION CONTROL CABLE ASSY

(a) Remove the 2 bolts and disconnect shift cable grommet retainer No.2.

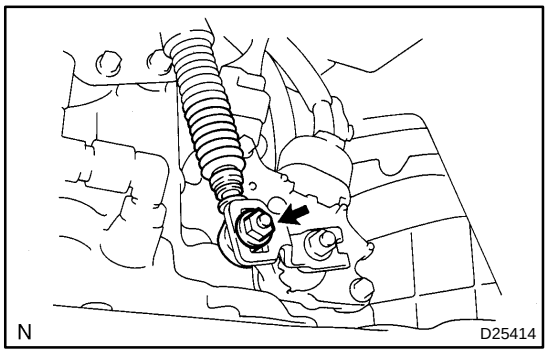

(b) Remove the nut from the control shaft lever.

(c) Disconnect the control cable from the control shaft lever.

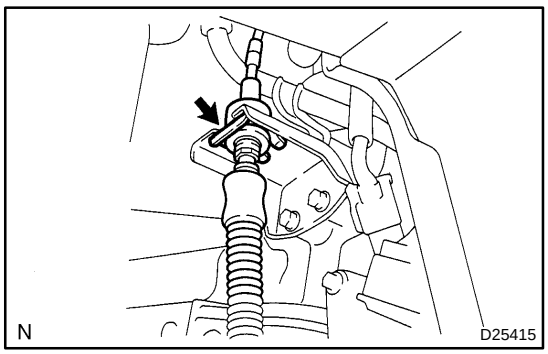

(d) Remove the clip and disconnect the control cable from the control cable bracket.

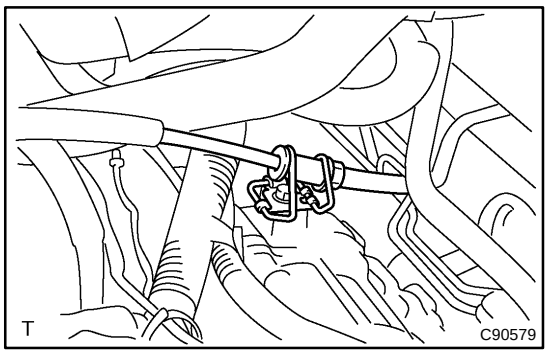

(e) Disconnect the control cable from the control cable clamp.

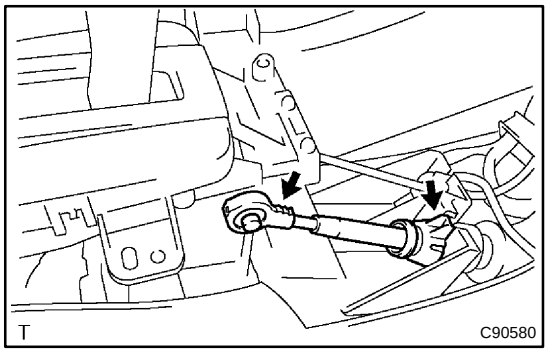

(f) Disconnect the floor shift cable from the transmission floor shift assy.
(g) Pull out the control cable from the body.
(h) Remove the shift cable grommet retainer No. 2.

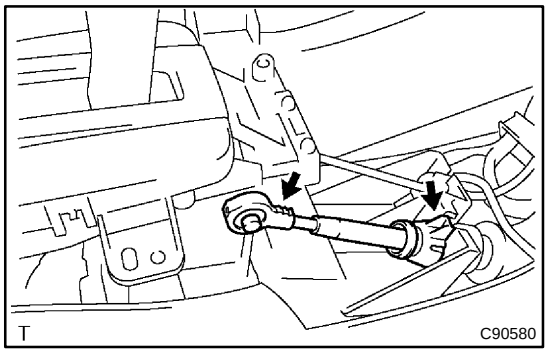

9. INSTALL TRANSMISSION CONTROL CABLE ASSY

(a) Put in the control cable to the body.
(b) Install the shift cable grommet retainer No.2 to the floor shift cable.
(c) Install the floor shift cable as shown in the illustration.

HINT:

- Install it with the uneven surface facing to up.
- Fit the claws securely.

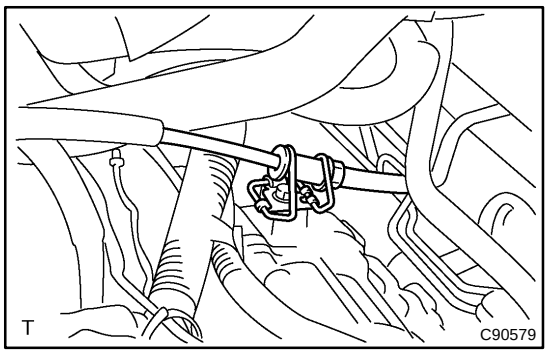

(d) Connect the control cable to the control cable clamp.

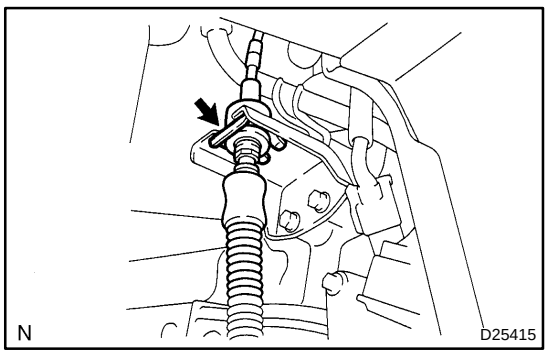

(e) Install the control cable and a new clip to the bracket.

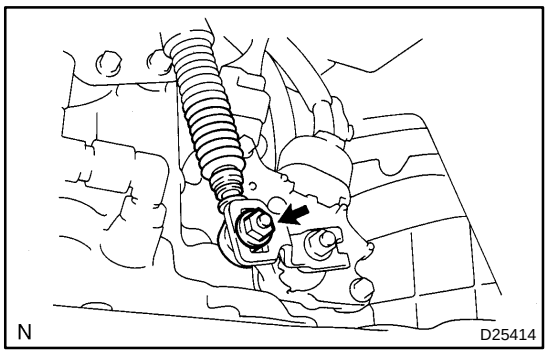

(f) Temporarily install the control cable to the control shaft lever with nuts.

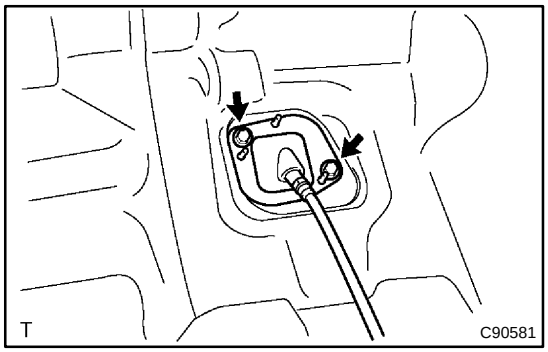

(g) Install the shift cable grommet retainer No.2 with the 2 bolts.
Torque: 4.9 N·m (50 kgf·cm, 43 in.·lbf)

10. **INSTALL EXHAUST PIPE ASSY (SEE PAGE 15−3)**
11. **INSTALL AIR BAG ECU ASSY (SEE PAGE 60−59)**
12. **INSTALL AIR CONDITIONING RADIATOR ASSY (SEE PAGE 14−29) or (SEE PAGE 14−164)**
13. **ADJUST SHIFT LEVER POSITION (SEE PAGE 40−64)**
14. **INSPECT SHIFT LEVER POSITION (SEE PAGE 40−64)**
15. **INSTALL INTAKE AIR CONNECTOR SUB−ASSY (SEE PAGE 14−29) or (SEE PAGE 14−164)**
16. **INSTALL AIR CLEANER ASSY (SEE PAGE 14−29) or (SEE PAGE 14−164)**
17. **INSTALL BATTERY NEGATIVE TERMINAL**

FLOOR SHIFT PARKING LOCK CABLE ASSY (ATM)

40113−03

REPLACEMENT

1. PRECAUTION (SEE PAGE 60−1)
2. DISCONNECT BATTERY NEGATIVE TERMINAL
3. REMOVE STEERING WHEEL COVER LOWER NO.2 (SEE PAGE 50−9) or (SEE PAGE 50−21)
4. REMOVE STEERING WHEEL COVER LOWER NO.3 (W/O STEERING PAD SWITCH 4 SPOKE STEERING WHEEL) (SEE PAGE 50−9) or (SEE PAGE 50−21)
5. REMOVE CONNECTOR COVER (W/ STEERING PAD SWITCH 4 SPOKE STEERING WHEEL) (SEE PAGE 50−9) or (SEE PAGE 50−21)
6. REMOVE STEERING WHEEL COVER LOWER NO.3 (3 SPOKE STEERING WHEEL ASSY) (SEE PAGE 50−9) or (SEE PAGE 50−21)
7. PLACE FRONT WHEELS FACING STRAIGHT AHEAD (SEE PAGE 50−9) or (SEE PAGE 50−21)
8. REMOVE HORN BUTTON ASSY (SEE PAGE 60−25)
9. REMOVE STEERING WHEEL ASSY (SEE PAGE 50−9) or (SEE PAGE 50−21)
   SST 09950−50013 (09951−05010, 09952−05010, 09953−05020, 09954−05021)
10. REMOVE INSTRUMENT CLUSTER FINISH PANEL (SEE PAGE 71−16)
11. REMOVE STEERING COLUMN COVER UPR (SEE PAGE 50−9) or (SEE PAGE 50−21)
12. REMOVE FRONT DOOR SCUFF PLATE LH (SEE PAGE 71−16)
13. REMOVE COWL SIDE TRIM SUB−ASSY LH (SEE PAGE 71−16)
14. REMOVE INSTRUMENT PANEL COIN BOX SUB−ASSY (SEE PAGE 71−16)
15. REMOVE INSTRUMENT PANEL FINISH LOWER PANEL LH (SEE PAGE 71−16)
16. REMOVE INSTRUMENT PNL INSERT SUB−ASSY LWR LH (SEE PAGE 71−16)
17. REMOVE CONSOLE BOX CARPET (SEE PAGE 71−16)
18. REMOVE RR CONSOLE BOX (SEE PAGE 71−16)
19. REMOVE FRONT ASH RECEPTACLE ASSY (W/ ASHTRAY) (SEE PAGE 71−16)
20. REMOVE CONSOLE BOX FRONT (SEE PAGE 71−16)
21. REMOVE AIR DUCT REAR NO.2 (SEE PAGE 71−16)
22. REMOVE AIR DUCT REAR NO.1 (SEE PAGE 71−16)
23. REMOVE CONSOLE BOX DUCT NO.1 (SEE PAGE 71−16)

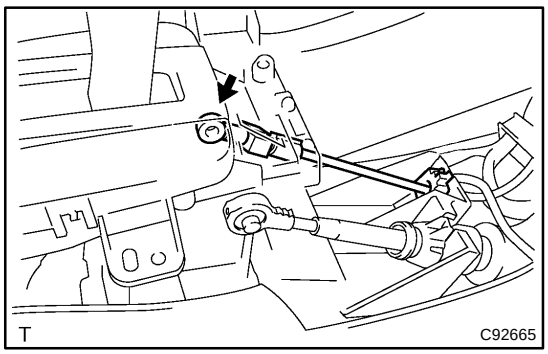

24. **REMOVE FLOOR SHIFT PARKING LOCK CABLE ASSY**

(a) Disconnect the parking lock cable end from the lever pin of the floor shift assembly.

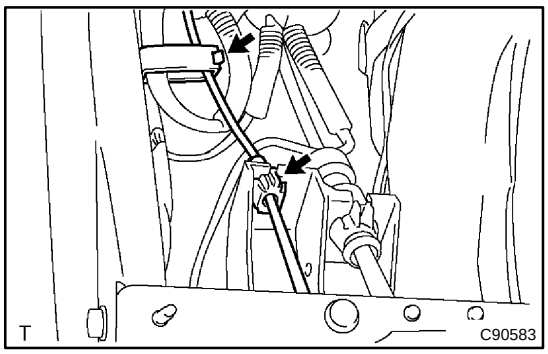

(b) Using a screwdriver, disconnect the parking lock cable from the floor shift assembly and clamp.

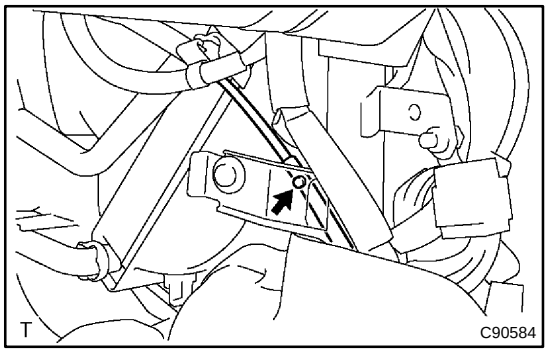

(c) Disconnect the cable clamp.
(d) Turn the ignition switch to ACC or ON position.

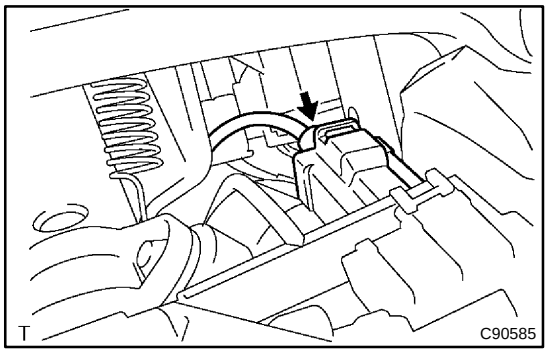

(e) Using a screwdriver, remove the cable from the upper bracket.

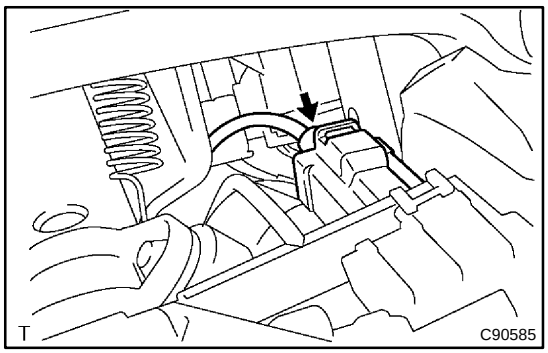

25. INSTALL FLOOR SHIFT PARKING LOCK CABLE ASSY

(a) Turn the ignition switch to ACC or ON.
(b) Connect the cable to the upper bracket.

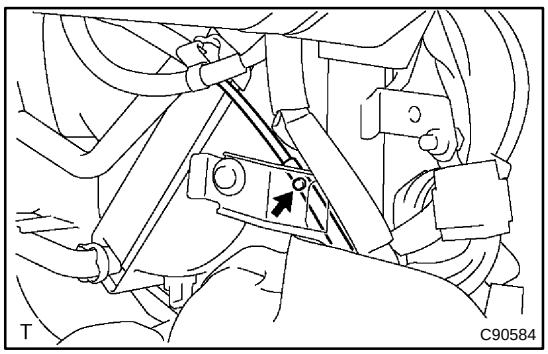

(c) Connect the cable clamp.

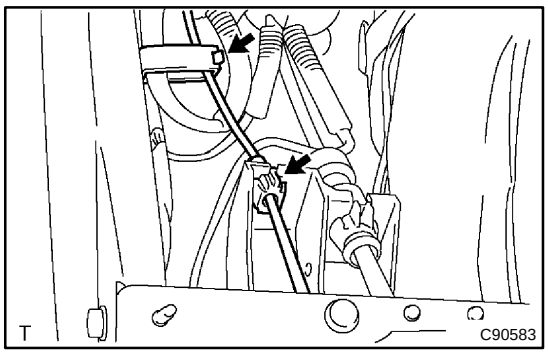

(d) Insert the slide cap into the through hole and install.

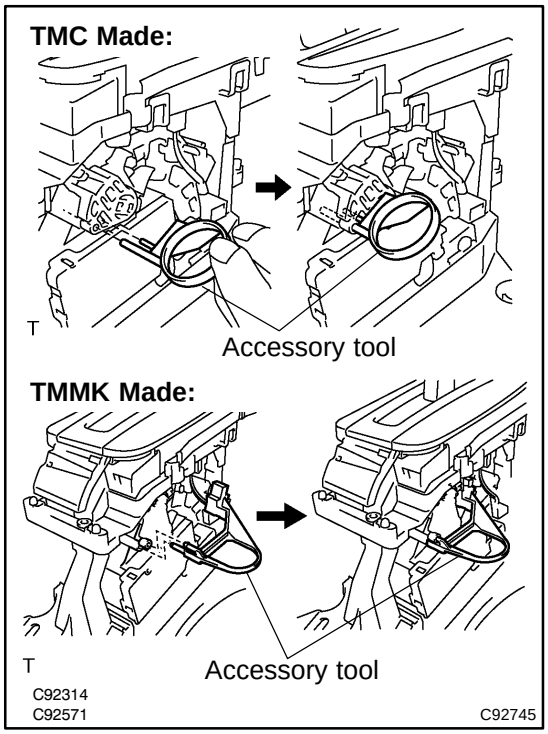

(e) Set the accessory tool.
(1) Shift the shift lever to P position and turn the ignition switch to LOCK position. (TMC made)
(2) Shift the shift lever to N position and turn the ignition switch to ACC position. (TMMK made)
(3) Set the accessory tool to the shift lock control unit assy.

Accessory tool parts No.:
TMC Made: 33693−33010
TMMK Made: 33693−06010

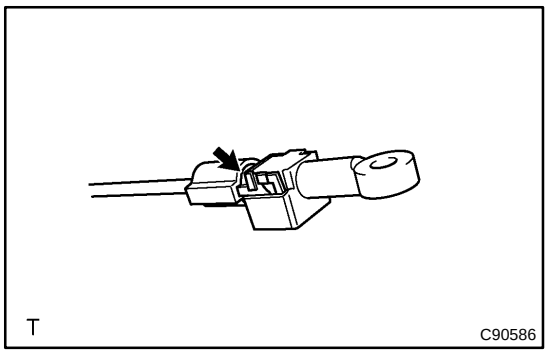

(f) Using a screwdriver, unlock the claw of the lock key of automatic adjustment part.

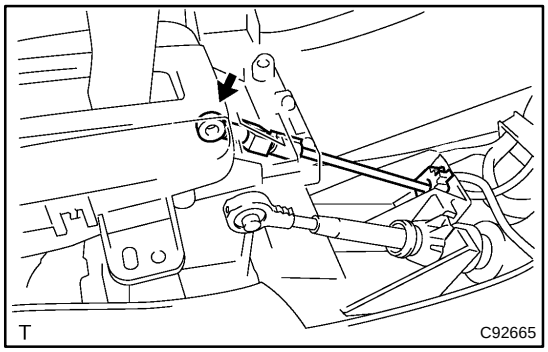

(g) Insert the lever pin into the hole in the floor shift parking lock cable.

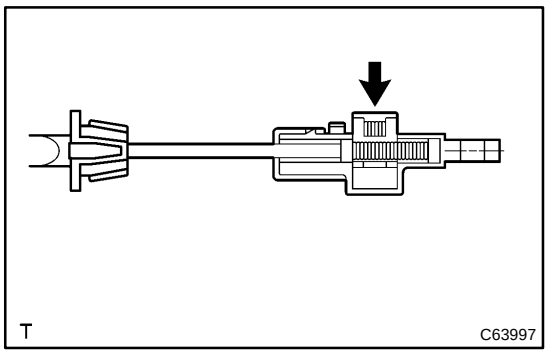

(h) Lock the lock key.

HINT:

- At this time, the shift lever should be in P position and the ignition key should be set to LOCK position. (TMC Made)
- At this time, the shift lever should be in N position and the ignition key should be set to ACC position. (TMMK Made)

(i) Remove the accessory tool.

Accessory tool parts No.:
TMC Made: 33693−33010
TMMK Made: 33693−06010

26. CHECK KEY INTERLOCK OPERATION (SEE PAGE 71−16)
27. INSTALL CONSOLE BOX DUCT NO.1 (SEE PAGE 71−16)
28. INSTALL AIR DUCT REAR NO.1 (SEE PAGE 71−16)
29. INSTALL AIR DUCT REAR NO.2 (SEE PAGE 71−16)
30. INSTALL CONSOLE BOX FRONT (SEE PAGE 71−16)
31. INSTALL FRONT ASH RECEPTACLE ASSY (W/ ASHTRAY) (SEE PAGE 71−16)
32. INSTALL RR CONSOLE BOX (SEE PAGE 71−16)
33. INSTALL CONSOLE BOX CARPET (SEE PAGE 71−16)
34. INSTALL INSTRUMENT PNL INSERT SUB−ASSY LWR LH (SEE PAGE 71−16)
35. INSTALL INSTRUMENT PANEL FINISH LOWER PANEL LH (SEE PAGE 71−16)
36. INSTALL INSTRUMENT PANEL COIN BOX SUB−ASSY (SEE PAGE 71−16)
37. INSTALL COWL SIDE TRIM SUB−ASSY LH (SEE PAGE 71−16)
38. INSTALL FRONT DOOR SCUFF PLATE LH (SEE PAGE 71−16)
39. INSTALL STEERING COLUMN COVER UPR (SEE PAGE 50−9) or (SEE PAGE 50−21)
40. INSTALL INSTRUMENT CLUSTER FINISH PANEL
41. INSTALL STEERING WHEEL ASSY (SEE PAGE 50−9) or (SEE PAGE 50−21)
42. INSPECT STEERING WHEEL CENTER POINT (SEE PAGE 50−9) or (SEE PAGE 50−21)
43. INSTALL HORN BUTTON ASSY (SEE PAGE 60−25)
44. INSTALL STEERING WHEEL COVER LOWER NO.2 (SEE PAGE 50−9) or (SEE PAGE 50−21)
45. INSTALL STEERING WHEEL COVER LOWER NO.3 (W/O STEERING PAD SWITCH 4 SPOKE STEERING WHEEL) (SEE PAGE 50−9) or (SEE PAGE 50−21)
46. INSTALL CONNECTOR COVER (W/ STEERING PAD SWITCH 4 SPOKE STEERING WHEEL) (SEE PAGE 50−9) or (SEE PAGE 50−21)
47. INSTALL STEERING WHEEL COVER LOWER NO.3 (3 SPOKE STEERING WHEEL ASSY) (SEE PAGE 50−9) or (SEE PAGE 50−21)
48. CONNECT BATTERY NEGATIVE TERMINAL
49. INSPECT SRS WARNING LIGHT (SEE PAGE 05−1467)

MANUAL TRANSAXLE SYSTEM

41052−03

PROBLEM SYMPTOMS TABLE

Use the table below to help you determine the cause of the problem. The numbers in the column of ”Suspect Area” indicate the possibility of the problem in descending order. Therefore, check the areas in this order. If necessary, replace or exchange these parts.

Symptom	Suspect Area	See page
Noise	1. Oil (Level low)	41−2
	2. Oil (Wrong)	41−2
	3. Gear (Worn or damaged)	41−15
	4. Bearing (Worn or damaged)	41−15
Oil leakage	1. Oil (Level too high)	41−2
	2. Gasket (Damaged)	41−15
	3. Oil seal (Worn or damaged)	41−15
	4. O−Ring (Worn or damaged)	41−15
Hard to shift or will not shift	1. Control cable (Faulty)	41−7 41−9
	2. Synchronizer ring (Worn or damaged)	41−15
	3. Shift key spring (Damaged)	41−15
Jumps out of gear	1. Locking ball spring (Damaged)	41−15
	2. Shift fork (Worn)	41−15
	3. Gear (Worn or damaged)	41−15
	4. Bearing (Worn or damaged)	41−15

MANUAL TRANSAXLE OIL

ON−VEHICLE INSPECTION

41051−05

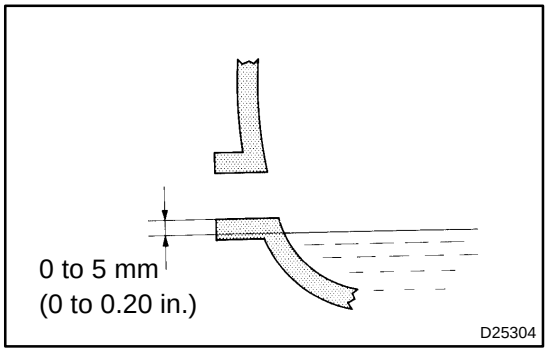

1. CHECK TRANSAXLE OIL

(a) Stop the vehicle on the level place.

(b) Remove the transmission filler plug and gasket.

(c) Check that the oil surface is within 5 mm (0.20 in.) from the lowest position of the inner surface of the transmission filler plug opening.

NOTICE:

- **Excessively large or small amount of oil may cause trouble.**
- **After exchanging oil, drive the vehicle and check the oil level.**

(d) Check for oil leakage when the oil level is low.

(e) Install the transmission filler plug and new gasket.
Torque: 49 N·m (500 kgf·cm, 36 ft·lbf)

FRONT DIFFERENTIAL OIL SEAL

4104T−06

REPLACEMENT

1. **DRAIN MANUAL TRANSAXLE OIL**
   Torque: 49 N·m (500 kgf·cm, 36 ft·lbf)
2. **REMOVE FRONT WHEELS**
3. **REMOVE FRONT DRIVE SHAFT ASSY LH (SEE PAGE 30−8)**
   SST 09520−01010, 09520−24010 (09520−32040)
4. **REMOVE FRONT DRIVE SHAFT ASSY RH (SEE PAGE 30−8)**

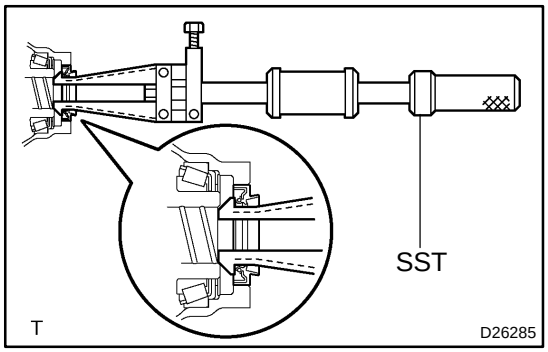

5. **REMOVE FRONT TRANSAXLE CASE COVER OIL SEAL**

(a) Using SST, remove the oil seal.
SST 09308−00010

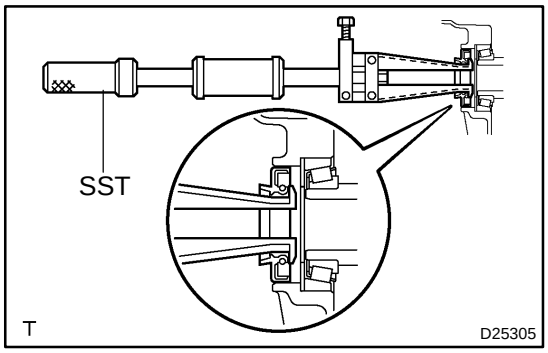

6. **REMOVE TRANSMISSION CASE OIL SEAL**

(a) Using SST, remove the oil seal.
SST 09308−00010

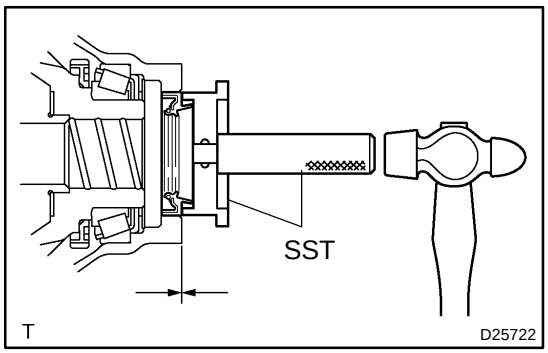

7. **INSTALL FRONT TRANSAXLE CASE COVER OIL SEAL**

(a) Coat a new oil seal lip with MP grease.
(b) Using SST and a hammer, install the oil seal.
SST 09608−10010, 09950−70010 (09951−07200)
Drive in depth: 0 ± 0.5 mm (0 ± 0.020 in.)

NOTICE:
Be careful not to damage the oil seal lip.

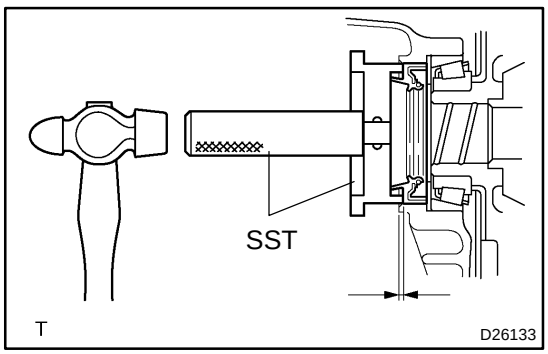

8. **INSTALL TRANSMISSION CASE OIL SEAL**

(a) Coat a new oil seal lip with MP grease.
(b) Using SST and a hammer, install the oil seal.
SST 09608−32010, 09950−70010 (09951−07200)
Drive in depth: 3.5 ± 0.5 mm (0.138 ± 0.020 in.)

NOTICE:
Be careful not to damage the oil seal lip.

9. INSTALL FRONT DRIVE SHAFT ASSY LH (SEE PAGE 30−8)
10. INSTALL FRONT DRIVE SHAFT ASSY RH (SEE PAGE 30−8)
11. INSTALL FRONT WHEELS
Torque: 103 N·m (1,050 kgf·cm, 76 ft·lbf)

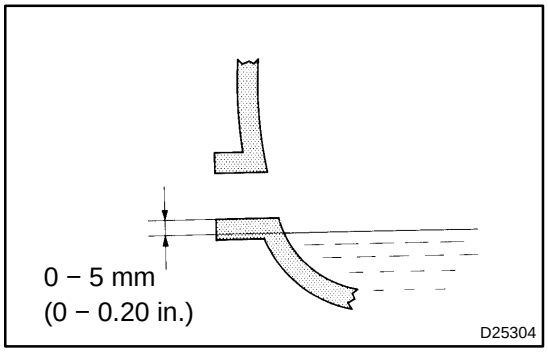

12. ADD MANUAL TRANSAXLE OIL
Oil grade: API GL−4 or GL−5
Viscosity: SAE 75W−90
Capacity: 2.5 liters (2.6 US qts, 2.2 lmp. qts)
Torque: 49 N·m (500 kgf·cm, 36 ft·lbf)

13. INSPECT AND ADJUST MANUAL TRANSAXLE OIL (SEE PAGE 41−2)
14. INSPECT AND ADJUST FRONT WHEEL ALIGNMENT (SEE PAGE 26−5)
15. CHECK ABS SPEED SENSOR SIGNAL (SEE PAGE 05−933)

FLOOR SHIFT SHIFT LEVER ASSY

4104U–06

REPLACEMENT

1. REMOVE SHIFT LEVER KNOB SUB–ASSY

2. REMOVE RR CONSOLE BOX

3. REMOVE CONSOLE BOX FRONT (SEE PAGE 71–16)

4. REMOVE AIR DUCT REAR NO.1 (SEE PAGE 55–34)

5. REMOVE AIR DUCT REAR NO.2 (SEE PAGE 55–34)

6. DISCONNECT FLOOR SHIFT CABLE TRANSMISSION CONTROL SELECT

(a) Remove the clip and separate the top of the select cable from the shift lever assy.

(b) Turn the lock and separate the select cable from the shift lever retainer.

7. DISCONNECT FLOOR SHIFT CABLE TRANSMISSION CONTROL SHIFT

(a) Separate the top of the shift cable from the shift lever assy.

(b) Turn the lock and separate the shift cable from the shift lever retainer.

8. REMOVE FLOOR SHIFT SHIFT LEVER ASSY

(a) Remove the 4 bolts and shift lever assy.

9. INSTALL FLOOR SHIFT SHIFT LEVER ASSY

(a) Install the shift lever assy with the 4 bolts.

Torque: 12 N·m (122 kgf·cm, 9 ft·lbf)

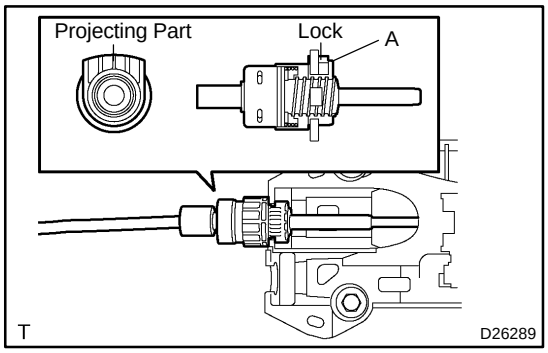

10. CONNECT FLOOR SHIFT CABLE TRANSMISSION CONTROL SHIFT

(a) Connect the shift cable to the shift lever retainer.

NOTICE:

- **The projecting part of the cable outer should face upward when the shift cable is installed.**
- **Make sure that after installation the cable outer lock is projecting from A shown in the illustration.**

(b) Install the top of the shift cable to the shift lever assy.

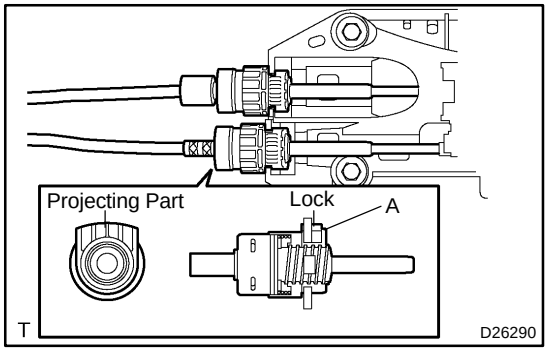

11. CONNECT FLOOR SHIFT CABLE TRANSMISSION CONTROL SELECT

(a) Connect the select cable to the shift lever retainer.

NOTICE:

- **The projecting part of the cable outer should face upward when the select cable is installed.**
- **Make sure that after installation the cable outer lock is projecting from A shown in the illustration.**

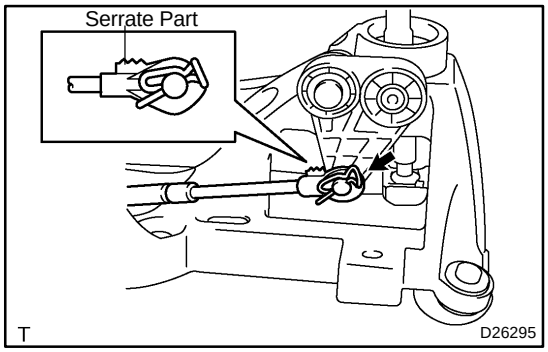

(b) Connect the top of the select cable to the shift lever assy and install the clip.

NOTICE:

- **The serrate part of the select cable point should face upward when the select cable point is connected.**
- **the clip should be inserted to the direction shown in the illustration.**

12. INSTALL AIR DUCT REAR NO.2 (SEE PAGE 55−34)
13. INSTALL AIR DUCT REAR NO.1 (SEE PAGE 55−34)
14. REMOVE CONSOLE BOX FRONT (SEE PAGE 71−16)
15. REMOVE RR CONSOLE BOX
16. REMOVE SHIFT LEVER KNOB SUB−ASSY

FLOOR SHIFT CABLE TRANSMISSION CONTROL SHIFT

4104V–05

REPLACEMENT

1. REMOVE INSTRUMENT PANEL SAFETY PAD SUB–ASSY (SEE PAGE 71–16)
2. REMOVE AIR CONDITIONING RADIATOR ASSY (SEE PAGE 55–34)
3. REMOVE AIR BAG SENSOR ASSY CENTER (SEE PAGE 60–59)

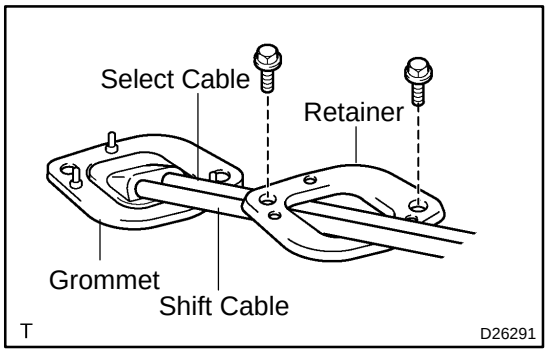

4. REMOVE FLOOR SHIFT CABLE TRANSMISSION CONTROL SHIFT

(a) Remove the clip and washer and separate the top of the shift cable from the transaxle.
(b) Remove the clip and shift cable from the control cable bracket.
(c) Turn the lock and separate the shift cable from the shift lever retainer.
(d) Separate the top of the shift cable from the shift lever assy.
(e) Remove the 2 retainer set bolts from the floor.
(f) Separate the retainer from the grommet.
(g) Remove the select cable from the grommet.
(h) Remove the shift cable through the floor hole and retainer.

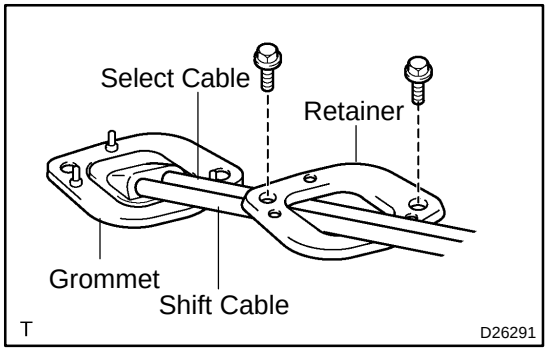

5. INSTALL FLOOR SHIFT CABLE TRANSMISSION CONTROL SHIFT

(a) Put the shift cable through the floor hole and retainer.
(b) Install the select cable to the grommet.
(c) Install the retainer to the grommet.

NOTICE:

Fit 3 projections of the grommet into 3 holes of the retainer.

(d) Install the 2 retainer set bolts.

Torque: 5.0 N·m (51 kgf·cm, 44 in.·lbf)

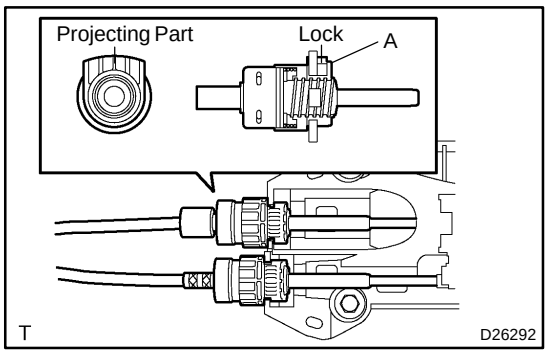

(e) Connect the shift cable to the shift lever retainer.

NOTICE:

- **The projecting part of the cable outer should face upward when the shift cable is installed.**
- **Make sure that after installation the cable outer lock is projecting from A shown in the illustration.**

(f) Install the top of the shift cable to the shift lever assy.

(g) Connect the shift cable to the control cable bracket and install a new clip.

(h) Connect the shift cable to the transaxle and install the washer and clip.

6. INSTALL AIR BAG SENSOR ASSY CENTER (SEE PAGE 60−59)

7. INSTALL AIR CONDITIONING RADIATOR ASSY (SEE PAGE 55−34)

8. INSTALL INSTRUMENT PANEL SAFETY PAD SUB−ASSY (SEE PAGE 71−16)

9. INSPECT SRS WARNING LIGHT (SEE PAGE 05−1452)

FLOOR SHIFT CABLE TRANSMISSION CONTROL SELECT

4104W–05

REPLACEMENT

1. **REMOVE INSTRUMENT PANEL SAFETY PAD SUB–ASSY (SEE PAGE 71–16)**
2. **REMOVE AIR CONDITIONING RADIATOR ASSY (SEE PAGE 55–34)**
3. **REMOVE AIR BAG SENSOR ASSY CENTER (SEE PAGE 60–59)**

4. REMOVE FLOOR SHIFT CABLE TRANSMISSION CONTROL SELECT

(a) Remove the clip and washer and separate the top of the select cable from the transaxle.
(b) Remove the clip and select cable from the control cable bracket.
(c) Turn the lock and separate the select cable from the shift lever retainer.
(d) Remove the clip and separate the top of the select cable from the shift lever assy.
(e) Remove the 2 retainer set bolts from the floor.
(f) Separate the retainer from the grommet.
(g) Remove the select cable from the grommet.
(h) Remove the select cable through the floor hole and retainer.

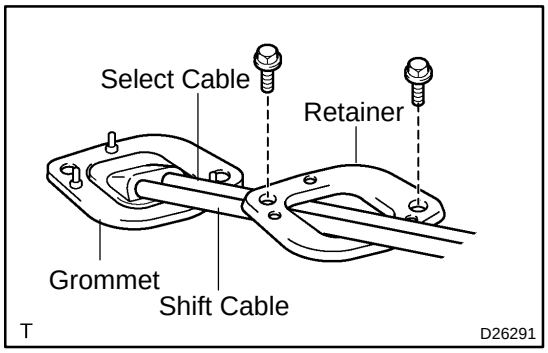

5. INSTALL FLOOR SHIFT CABLE TRANSMISSION CONTROL SELECT

(a) Put the select cable through the floor hole and retainer.
(b) Install the select cable to the grommet.
(c) Install the retainer to the grommet.

NOTICE:

Fit 3 projections of the grommet into 3 holes of the retainer.

(d) Install the 2 retainer set bolts.

Torque: 5.0 N·m (51 kgf·cm, 44 in.·lbf)

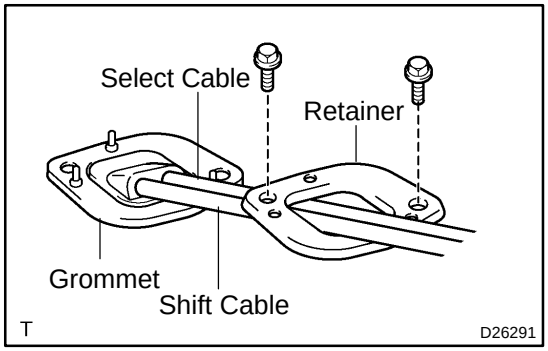

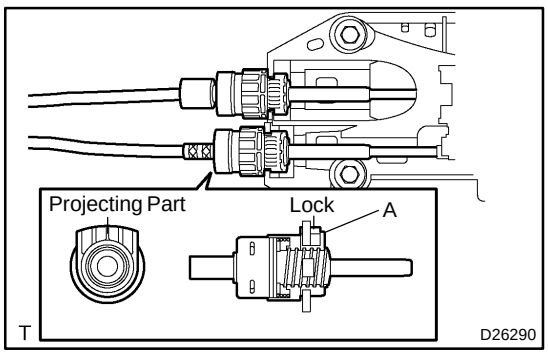

(e) Connect the select cable to the shift lever retainer.

NOTICE:

- **The projecting part of the cable outer should face upward when the select cable is installed.**
- **Make sure that after installation the cable outer lock is projecting from A shown in the illustration.**

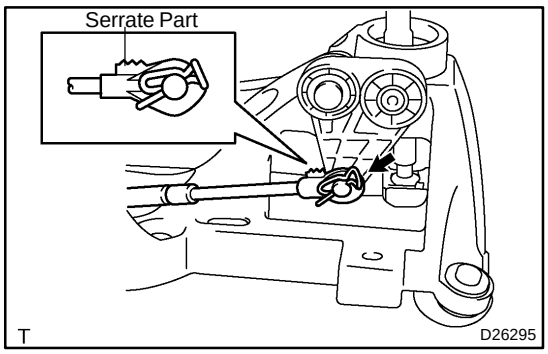

(f) Connect the top of the select cable to the shift lever assy and install the clip.

NOTICE:

- **The serrate part of the select cable point should face upward when the select cable point is connected.**
- **the clip should be inserted to the direction shown in the illustration.**

(g) Connect the top of the select cable to the shift lever assy and install the clip.

(h) Connect the select cable to the control cable bracket and install a new clip.

(i) Connect the select cable to the transaxle and install the washer and clip.

6. INSTALL AIR BAG SENSOR ASSY CENTER (SEE PAGE 60−59)

7. INSTALL AIR CONDITIONING RADIATOR ASSY (SEE PAGE 55−34)

8. INSTALL INSTRUMENT PANEL SAFETY PAD SUB−ASSY (SEE PAGE 71−16)

9. INSPECT SRS WARNING LIGHT (SEE PAGE 05−1452)

MANUAL TRANSAXLE ASSY (From July, 2003)

4015I−04

REPLACEMENT

COMPONENTS: Partial engine assy (see page 14−16)

1. REMOVE ENGINE ASSEMBLY WITH TRANSAXLE (SEE PAGE 14−29)

2. REMOVE FRONT DRIVE SHAFT ASSY RH (SEE PAGE 30−8)

3. REMOVE FRONT DRIVE SHAFT ASSY LH (SEE PAGE 30−8)

4. REMOVE CLUTCH ACCUMULATOR ASSY (SEE PAGE 42−14)

5. REMOVE CLUTCH RELEASE CYLINDER ASSY (SEE PAGE 42−12)

6. DISCONNECT WIRE HARNESS

(a) Disconnect the wire harness clamp.

(b) Disconnect the back−up lamp switch connector, speedometer sensor connector and starter connector.

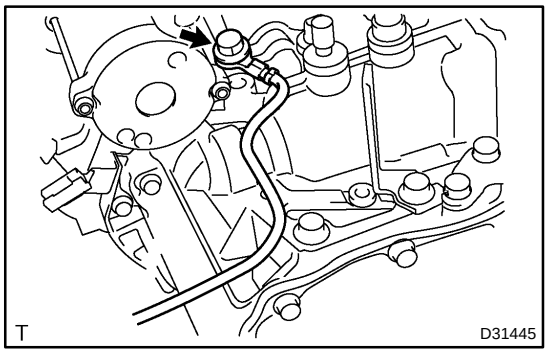

7. REMOVE ENGINE WIRE NO.3

(a) Remove the bolt and disconnect the engine wire No.3.

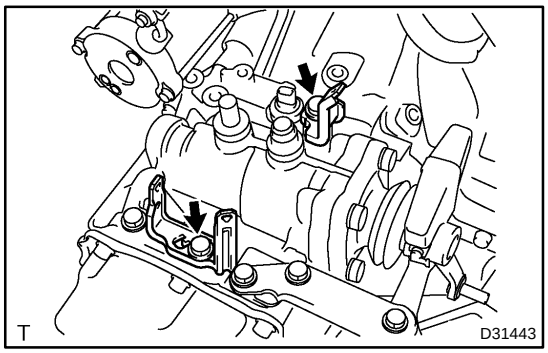

8. REMOVE WIRE HARNESS CLAMP

(a) Remove the 2 bolts and 2 wire harness clamps.

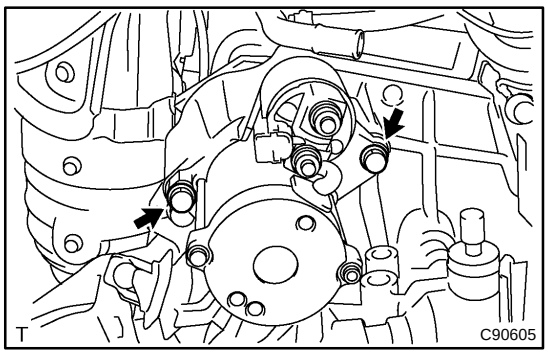

9. REMOVE STARTER ASSY

(a) Remove the 2 bolts and starter assy.

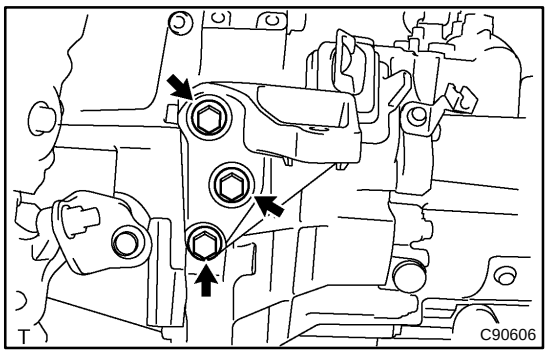

10. REMOVE ENGINE MOUNTING BRACKET FR

(a) Remove the 3 bolts and engine mounting bracket FR.

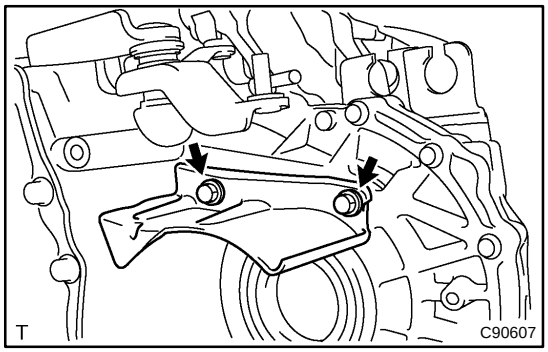

11. REMOVE MANUAL TRANSMISSION CASE PROTECTOR

(a) Remove the 2 bolts and manual transmission case protector.

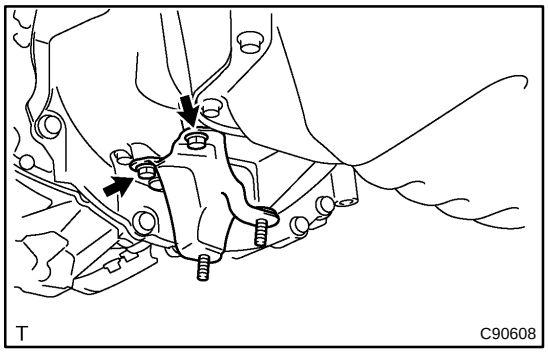

12. REMOVE EXHAUST PIPE SUPPORT BRACKET NO.1

(a) Remove the 2 bolts and exhaust pipe support bracket No.1.

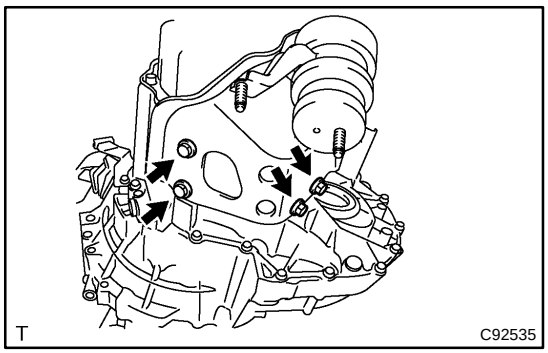

13. REMOVE ENGINE MOUNTING INSULATOR LH

(a) Remove the 4 bolts and engine mounting insulator LH.

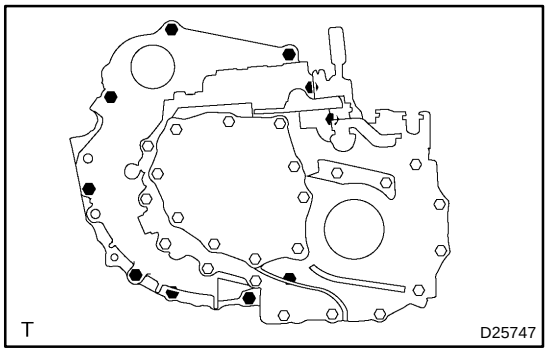

14. REMOVE MANUAL TRANSAXLE ASSY

(a) Remove the 10 bolts.

(b) Separate and remove the transaxle from the engine.

15. INSTALL MANUAL TRANSAXLE ASSY

(a) Align the input shaft with the clutch disc and install the transaxle to the engine.

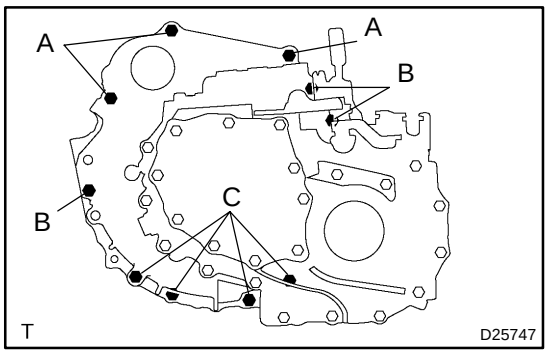

(b) Install the 10 bolts.
Torque:
Bolt A: 64 N·m (653 kgf·cm, 47 ft·lbf)
Bolt B: 46 N·m (470 kgf·cm, 34 ft·lbf)
Bolt C: 44 N·m (449 kgf·cm, 32 ft·lbf)

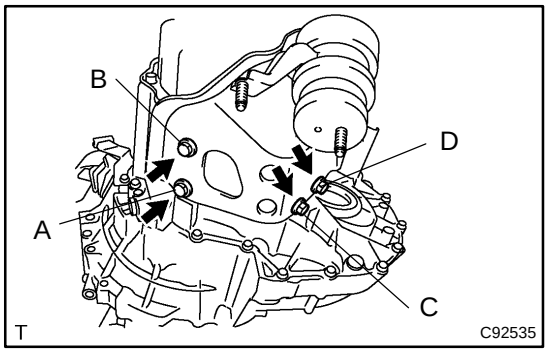

16. INSTALL ENGINE MOUNTING INSULATOR LH

(a) Install the engine mounting insulator LH with the 4 bolts.
Torque: 64 N·m (653 kgf·cm, 47 ft·lbf)

HINT:
Tighten them in order: A, B, C and D.

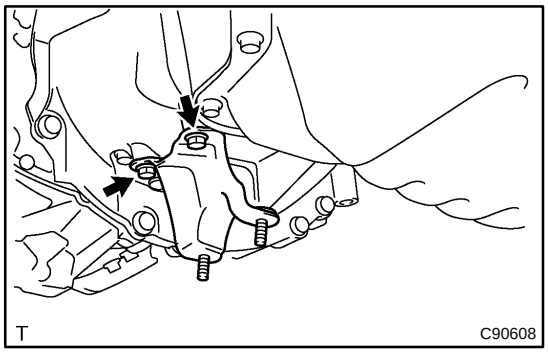

17. INSTALL EXHAUST PIPE SUPPORT BRACKET NO.1

(a) Install the exhaust pipe support bracket No.1 with the 2 bolts.
Torque: 19 N·m (194 kgf·cm, 14 ft·lbf)

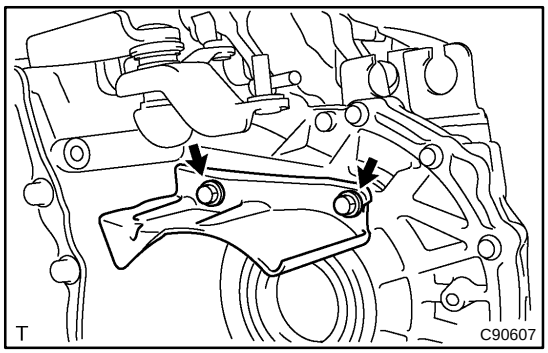

18. INSTALL MANUAL TRANSMISSION CASE PROTECTOR

(a) Install the manual transmission case protector with the 2 bolts.
Torque: 18 N·m (184 kgf·cm, 13 ft·lbf)

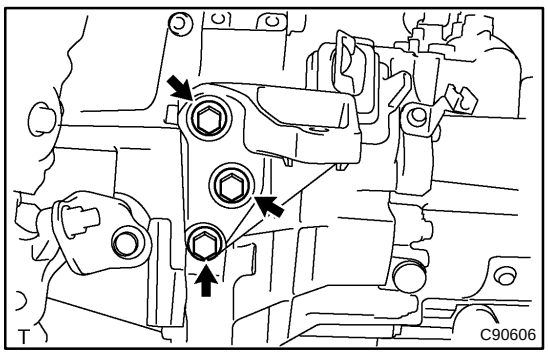

19. INSTALL ENGINE MOUNTING BRACKET FR

(a) Install the engine mounting bracket FR with the 3 bolts.
Torque: 64 N·m (653 kgf·cm, 47 ft·lbf)

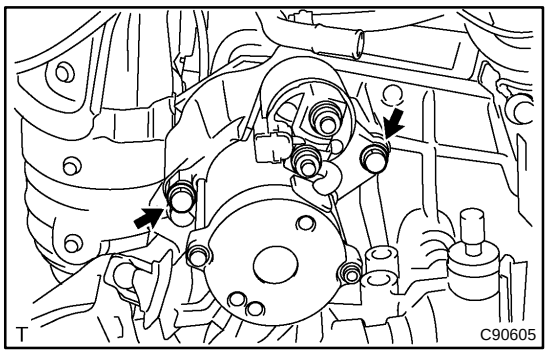

20. INSTALL STARTER ASSY

(a) Install the starter assy with the 2 bolts.
Torque: 39 N·m (398 kgf·cm, 29 ft·lbf)

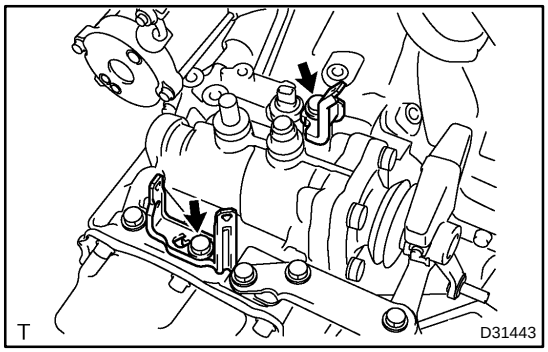

21. INSTALL WIRE HARNESS CLAMP

(a) Install the 2 wire harness clamps with the 2 bolts.
Torque: 8.4 N·m (86 kgf·cm, 74 in.·lbf)

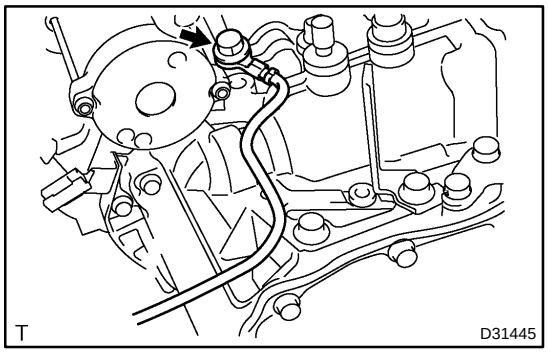

22. INSTALL ENGINE WIRE NO.3

(a) Connect the engine wire No. 3 with the bolt.
Torque: 9.6 N·m (98 kgf·cm, 85 in.·lbf)

23. CONNECT WIRE HARNESS

(a) Install the wire harness clamp.
(b) Connect the back−up lamp switch connector, speedometer sensor connector and starter connector.

24. INSTALL CLUTCH RELEASE CYLINDER ASSY (SEE PAGE 42−12)
25. INSTALL CLUTCH ACCUMULATOR ASSY (SEE PAGE 42−14)
26. INSTALL FRONT DRIVE SHAFT ASSY LH (SEE PAGE 30−8)
27. INSTALL FRONT DRIVE SHAFT ASSY RH (SEE PAGE 30−8)
28. INSTALL ENGINE ASSEMBLY WITH TRANSAXLE (SEE PAGE 14−29)

MANUAL TRANSAXLE ASSY (E351)

41053−04

OVERHAUL

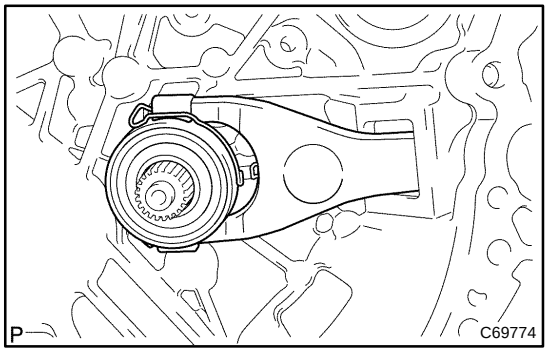

1. REMOVE CLUTCH RELEASE FORK SUB−ASSY

(a) Remove the clutch release fork with clutch release bearing from the manual transaxle case.

2. REMOVE CLUTCH RELEASE BEARING ASSY

(a) Remove the clutch release bearing assy and clutch release bearing hub clip from the clutch release fork sub−assy.

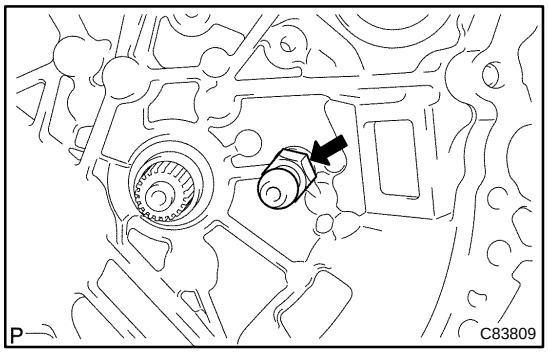

3. REMOVE RELEASE FORK SUPPORT

(a) Remove the release fork support from the manual transaxle case.

4. REMOVE CLUTCH RELEASE FORK BOOT

(a) Remove the clutch release fork boot from the manual transaxle case.

5. REMOVE SPEEDOMETER DRIVEN HOLE COVER SUB−ASSY

(a) Remove the bolt and speedometer driven hole cover.

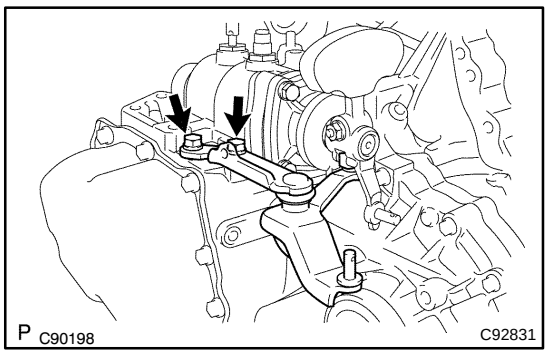

6. REMOVE SELECTING BELL CRANK ASSY

(a) Remove the 2 bolts and selecting bell crank assy from manual transmission case.

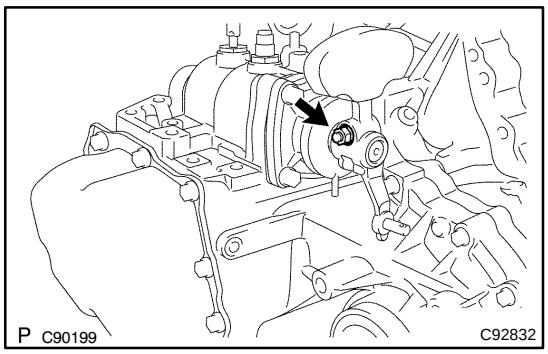

7. REMOVE CONTROL SHIFT LEVER

(a) Remove the nut and spring washer.

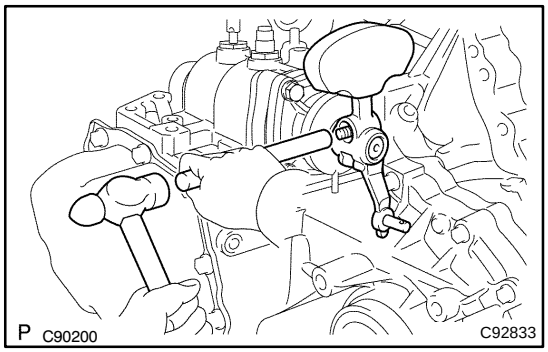

(b) Using a brass bar and hammer, remove the shift outer lock pin.

(c) Remove the control shift lever.

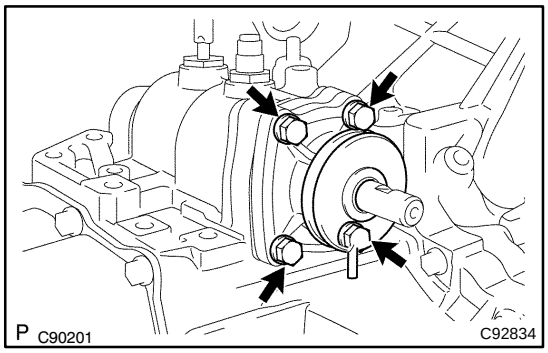

8. REMOVE CONTROL SHAFT COVER

(a) Remove the 4 bolts and control shaft cover from the manual transmission case.

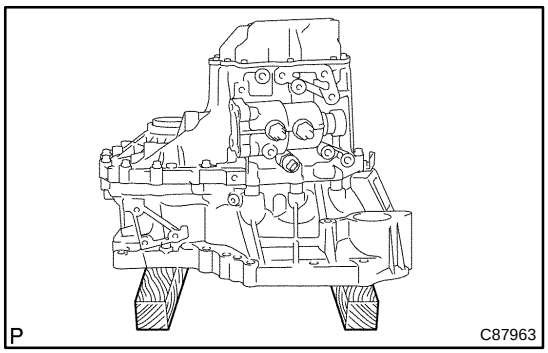

9. FIX MANUAL TRANSAXLE ASSY

(a) Using wooden blocks, fix the manual transaxle assy.

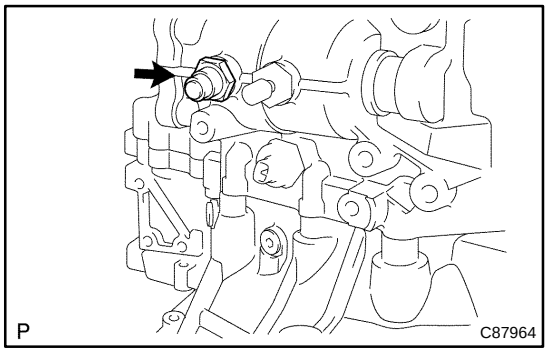

10. REMOVE LOCK BALL ASSY NO.1

(a) Remove the lock ball assy No.1 from the manual transmission case.

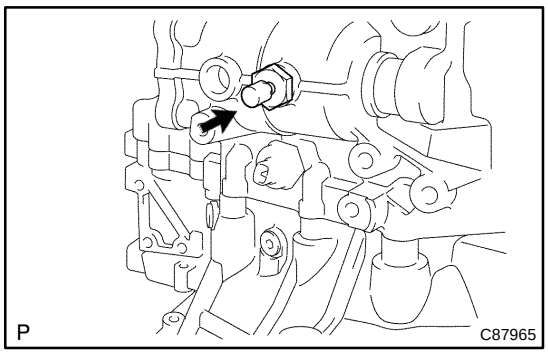

11. REMOVE MANUAL TRANSMISSION BREATHER PLUG

(a) Remove the manual transmission breather plug and gasket.

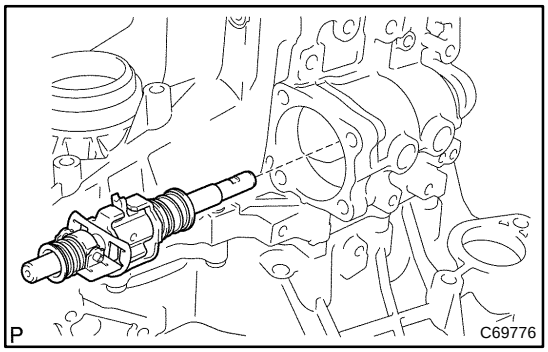

12. REMOVE SHIFT & SELECT LEVER SHAFT ASSY

(a) Remove the shift & select lever shaft assy from the manual transmission case.

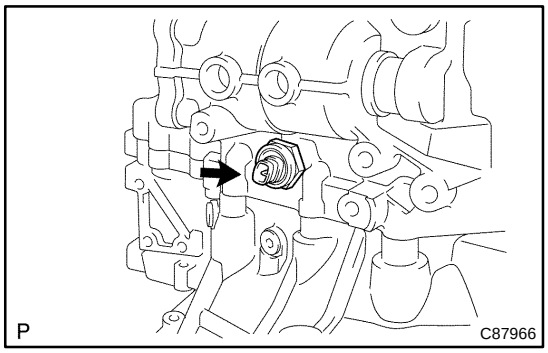

13. REMOVE BACK UP LAMP SWITCH ASSY

(a) Remove the back up lamp switch assy and gasket from the manual transmission case.

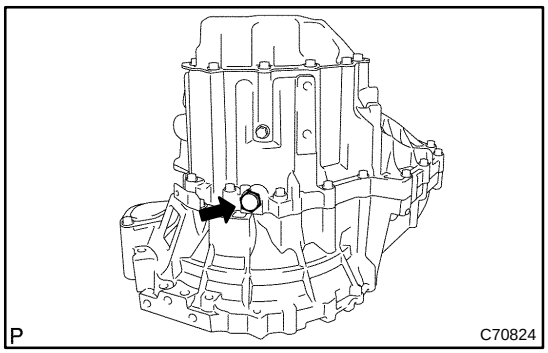

14. REMOVE MANUAL TRANSMISSION FILLER PLUG

(a) Remove the manual transmission filler plug and gasket from the manual transmission case.

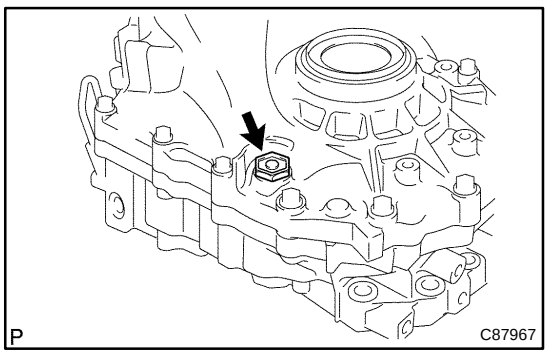

15. REMOVE DRAIN (MTM) PLUG SUB−ASSY

(a) Remove the drain (MTM) plug sub−assy and gasket from the manual transmission case.

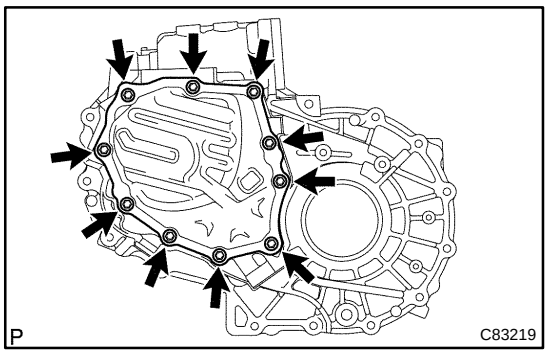

16. REMOVE MANUAL TRANSMISSION CASE COVER SUB−ASSY

(a) Remove the 10 bolts and manual transmission case cover from the manual transmission case.

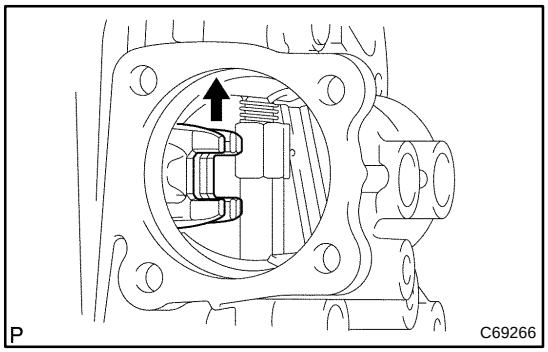

17. REMOVE MANUAL TRANSMISSION OUTPUT SHAFT REAR SET NUT

(a) Engage the gear to the double meshing.

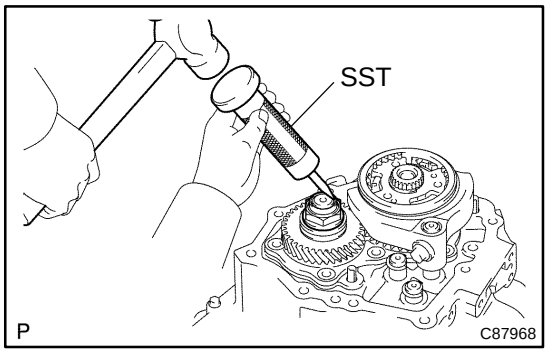

(b) Using SST and a hammer, loosen the staked part of the manual transmission output shaft rear set nut.
SST 09930−00010

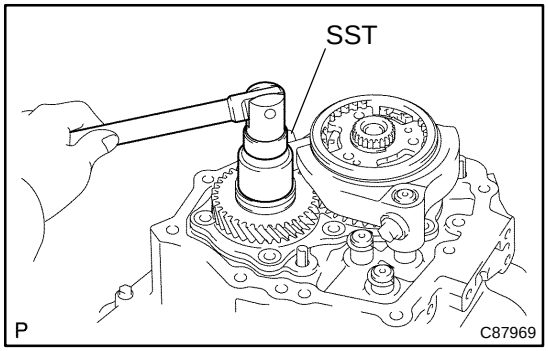

(c) Using SST, remove the manual transmission output shaft rear set nut from the output shaft.
SST 09229−55010

(d) Disengage the double meshing of the gear.

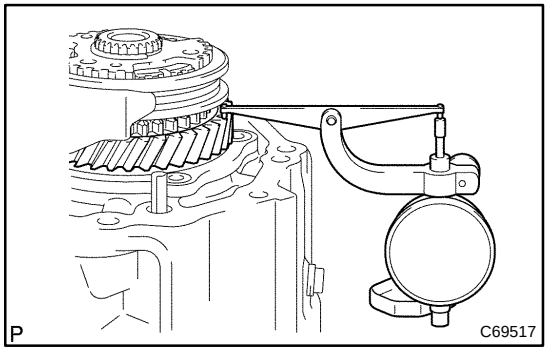

18. INSPECT 5TH GEAR THRUST CLEARANCE

(a) Using a dial indicator, inspect the 5th gear thrust clearance.
Standard clearance:
0.10 to 0.65 mm (0.0039 to 0.0256 in.)

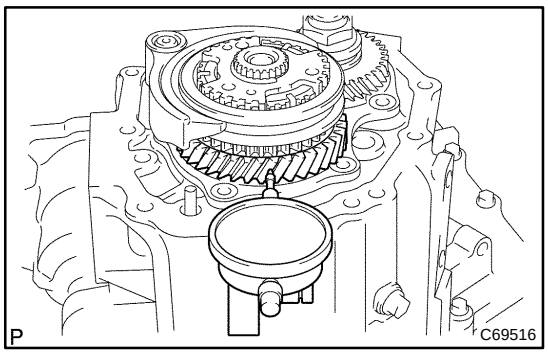

19. INSPECT 5TH GEAR RADIAL CLEARANCE

(a) Using a dial indicator, inspect the 5th gear radial clearance.

Standard clearance:
0.009 to 0.050 mm (0.0004 to 0.0020 in.)

HINT:
If the clearance is out of the specification, replace 1st gear needle roller bearing.

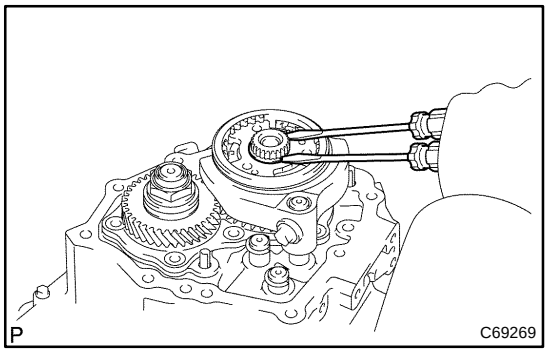

20. REMOVE TRANSMISSION CLUTCH HUB NO.3

(a) Using 2 screwdrivers and hammer, remove the transmission clutch hub No.3 shaft snap ring from the input shaft.

HINT:
Using a waste to prevent the snap ring from being scattered.

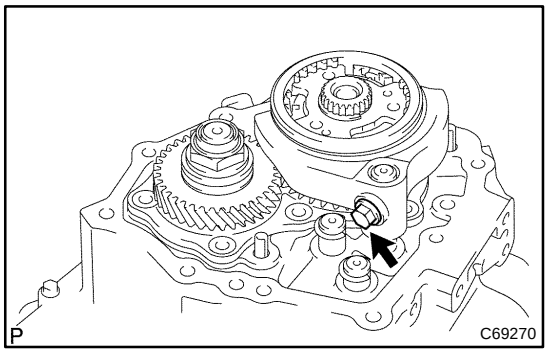

(b) Remove the gear shift fork bolt from the gear shift fork No.3.

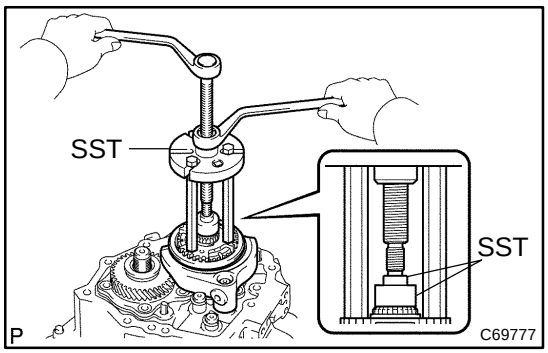

(c) Using SST, remove the transmission clutch hub No.3 and gear shift fork No.3 from the input shaft.

SST 09950−30012 (09951−03010, 09953−03010, 09954−03010), 09950−50013 (09957−04010), 09950−60010 (09951−00280)

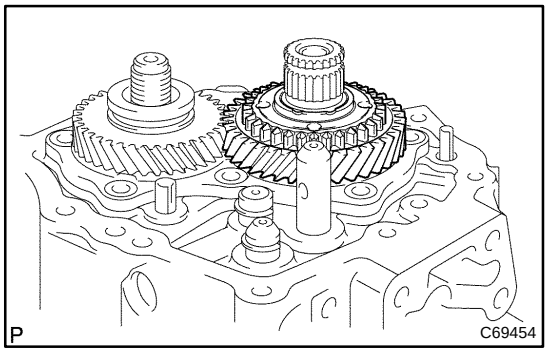

21. REMOVE 5TH GEAR

(a) Remove the 5th gear from the input shaft.

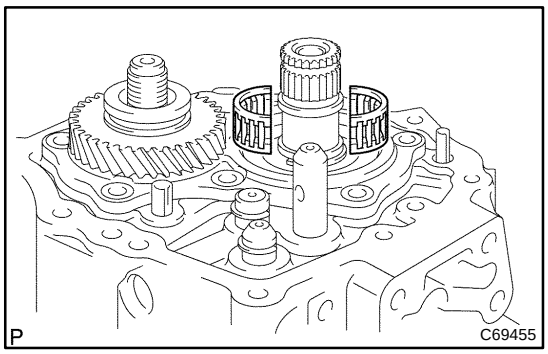

22. REMOVE 5TH GEAR NEEDLE ROLLER BEARING

(a) Remove the 5th gear needle roller bearing from the input Shaft.

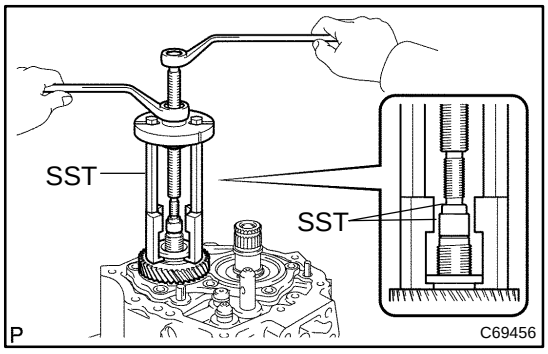

23. REMOVE 5TH DRIVEN GEAR

(a) Using SST, remove the 5th driven gear from the output shaft.

SST 09950−30012 (09951−03010, 09953−03010, 09954−03010, 09957−04010), 09950−60010 (09951−00180, 09955−03011), 09950−50013

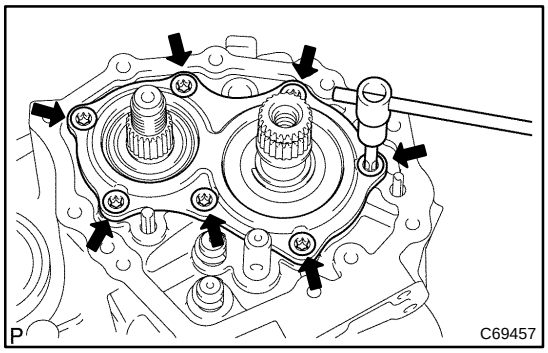

24. REMOVE BEARING RETAINER REAR (MTM)

(a) Using a torx socket wrench (T45), remove the 7 torx screws and bearing retainer rear (MTM) from the manual transmission case.

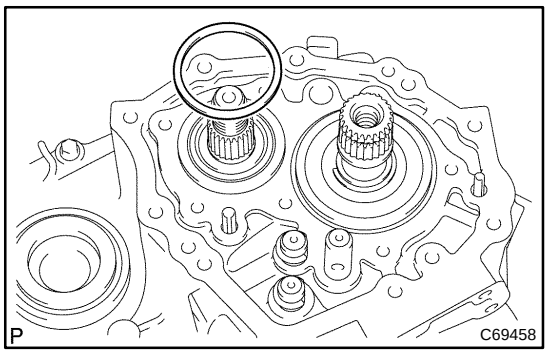

25. REMOVE OUTPUT SHAFT REAR BEARING SHIM

(a) Remove the output shaft rear bearing shim from the output shaft.

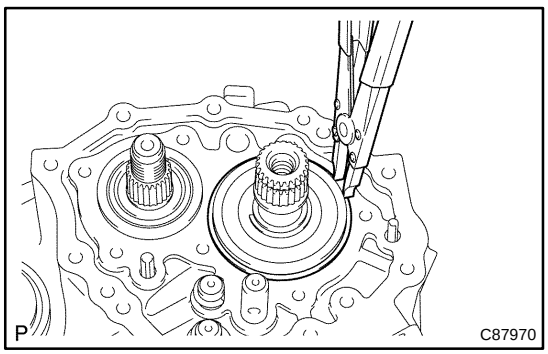

26. REMOVE INPUT SHAFT REAR BEARING SHAFT SNAP RING

(a) Using a snap ring expander, remove the input shaft rear bearing shaft snap ring from the input shaft.

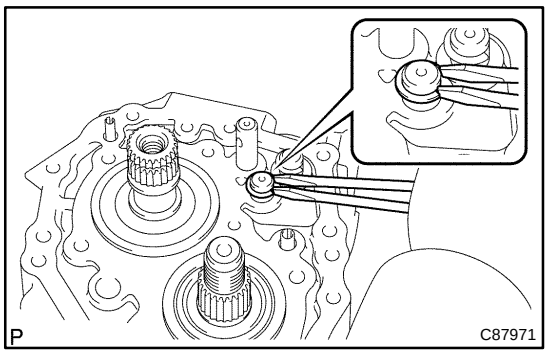

27. REMOVE SHIFT FORK SHAFT SHAFT SNAP RING

(a) Using 2 screwdrivers and a hammer, remove the shift fork shaft shaft snap ring from the gear shift fork shaft No.1.

HINT:

Using a waste to prevent the snap ring from being scattered.

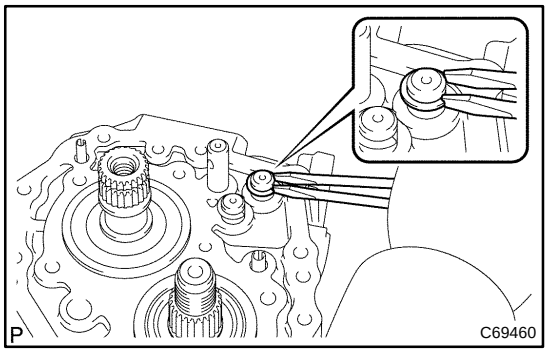

(b) Using 2 screw drivers and a hammer, remove the shift fork shaft shaft snap ring from the gear shift fork shaft No.2.

HINT:

Using a waste to prevent the snap ring from being scattered.

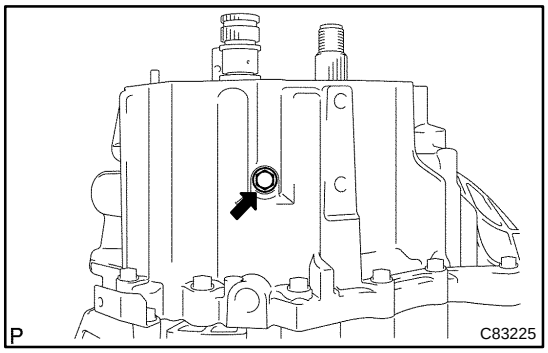

28. REMOVE REVERSE IDLER GEAR SHAFT BOLT

(a) Remove the reverse idler gear shaft bolt and gasket.

29. REMOVE CLUTCH TUBE BRACKET NO.1

(a) Remove the 3 bolts and remove the clutch tube bracket.

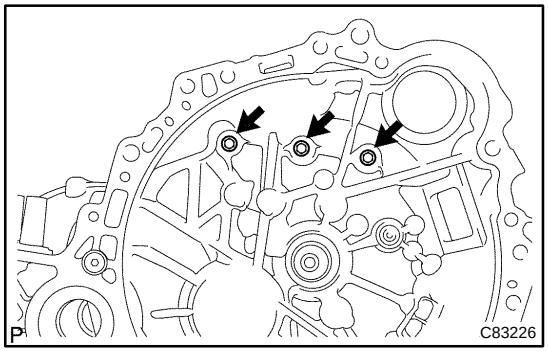

30. REMOVE MANUAL TRANSMISSION CASE

(a) Remove the 3 bolts of the manual transaxle case side.

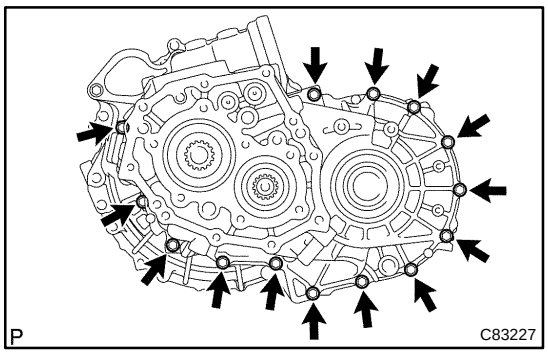

(b) Remove the 14 bolts of the manual transmission case side.
(c) Using a plastic hammer, remove the manual transmission case.

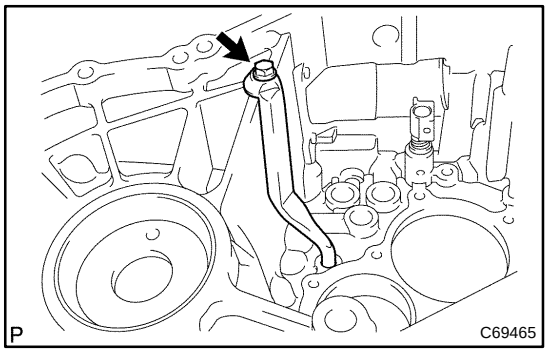

31. REMOVE OIL RECEIVER PIPE NO.2 (MTM)

(a) Remove the bolt and oil receiver pipe No.2 (MTM) from the manual transmission case.

NOTICE:
Do not damage the pipe.

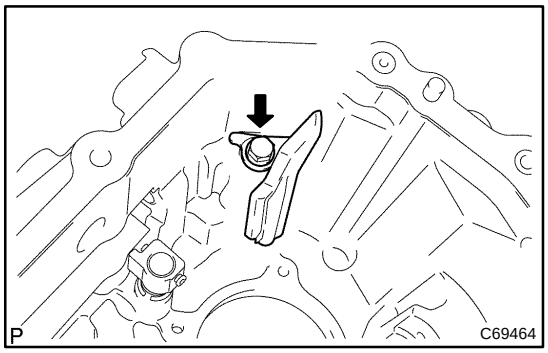

32. REMOVE OIL RECEIVER PIPE NO.1 (MTM)

(a) Remove the bolt and oil receiver pipe No.1 (MTM) from the manual transmission case.

NOTICE:
Do not damage the pipe.

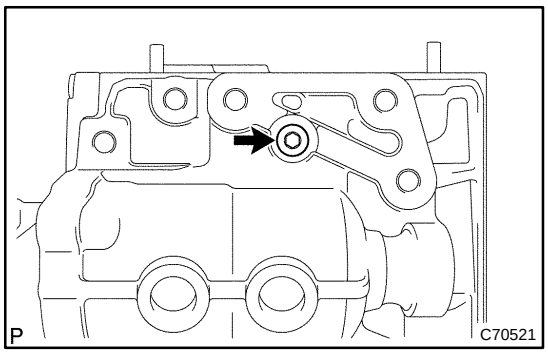

33. REMOVE REVERSE RESTRICT PIN ASSY

(a) Using a hexagon wrench (6 mm), remove the reverse restrict pin plug from the manual transmission case.

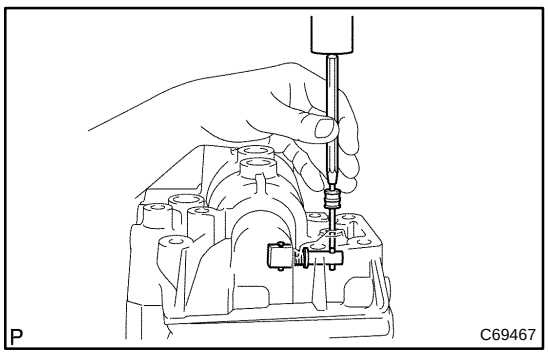

(b) Using a pin punch (ϕ 5 mm), remove the slotted pin and reverse restrict pin assy.

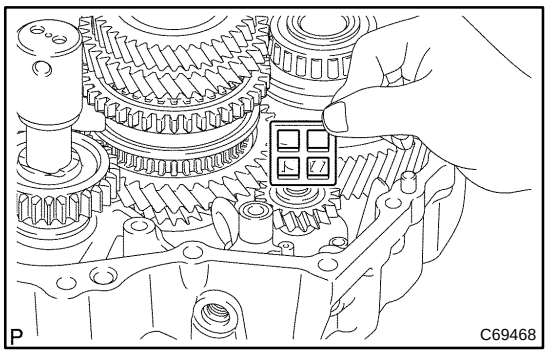

34. REMOVE TRANSMISSION MAGNET

(a) Remove the transmission magnet from the manual transaxle case.

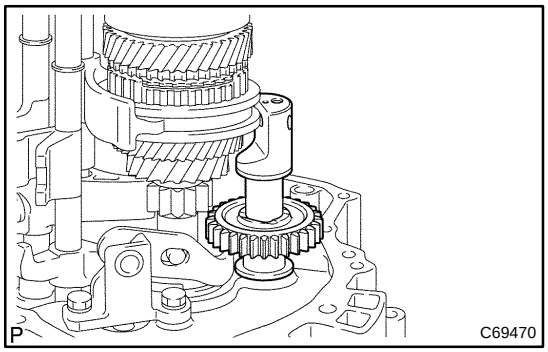

35. REMOVE REVERSE IDLER GEAR SUB−ASSY

(a) Remove the reverse idler gear sub−assy from the manual transaxle case.

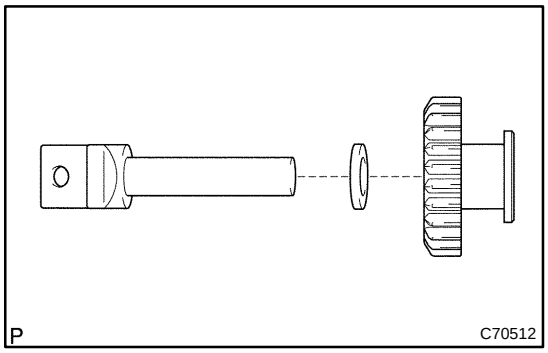

(b) Remove the reverse gear and reverse idler thrust washer from the reverse idler gear shaft.

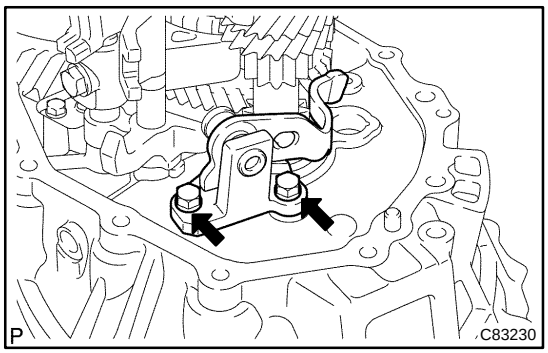

36. REMOVE REVERSE SHIFT ARM BRACKET ASSY

(a) Remove the 2 bolts and reverse shift arm bracket from the manual transaxle case.

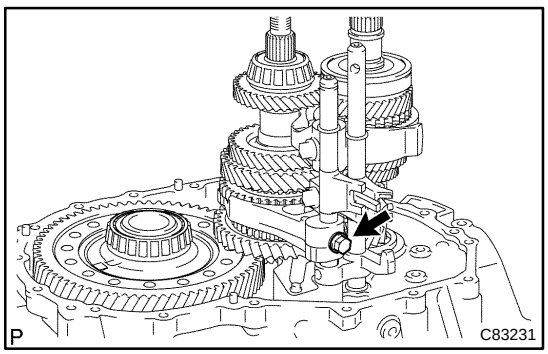

37. REMOVE GEAR SHIFT FORK SHAFT NO.1

(a) Remove the shift fork bolt from the gear shift fork No.1.

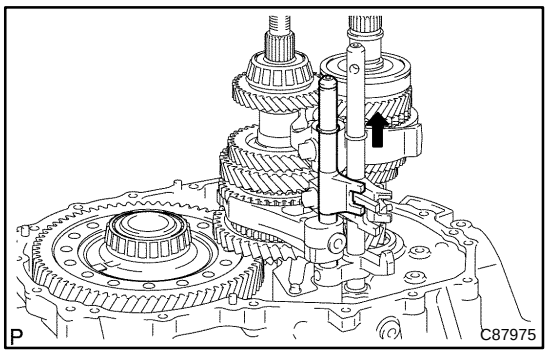

(b) Pull out the gear shift fork shaft No.1 while the gear fork shaft No.3 is pulled up.

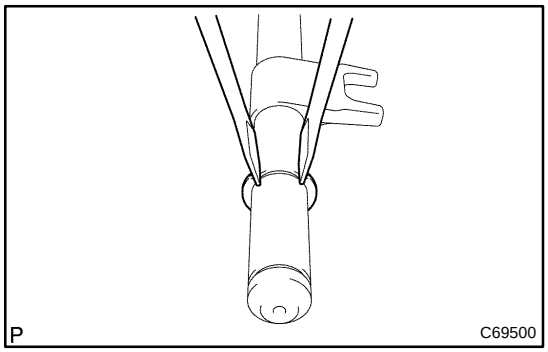

(c) Using 2 screwdrivers and a hammer, remove the shift fork shaft snap ring from the gear shift fork shaft No.1.

NOTICE:

Using a waste to prevent the snap ring from being scattered.

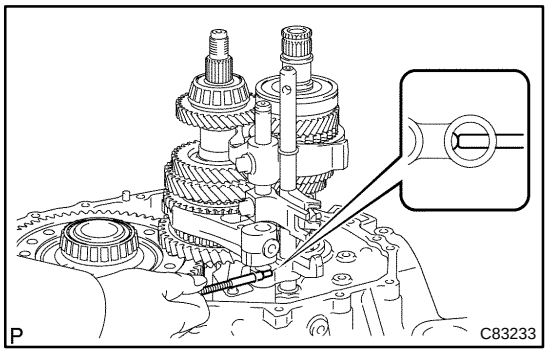

38. REMOVE REVERSE SHIFT FORK ROLLER

(a) Using a magnetic finger, remove the reverse shift fork roller from the reverse shift fork.

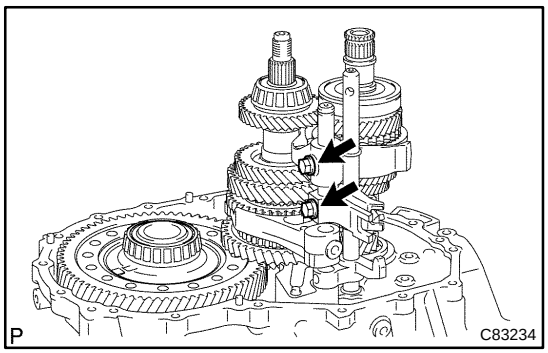

39. REMOVE GEAR SHIFT FORK SHAFT NO.2

(a) Remove the 2 shift fork bolts from the gear shift fork No.2 and gear shift head No.1.

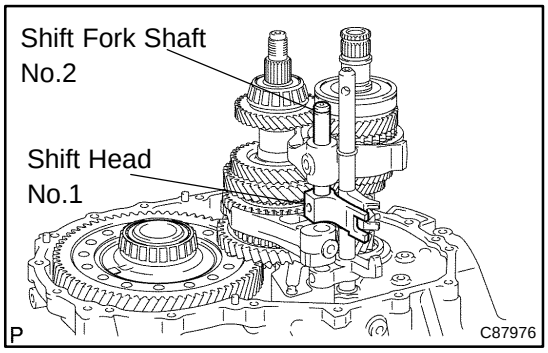

(b) Remove the gear shift fork shaft No.2 and gear shift head No.1 from the manual transaxle case.

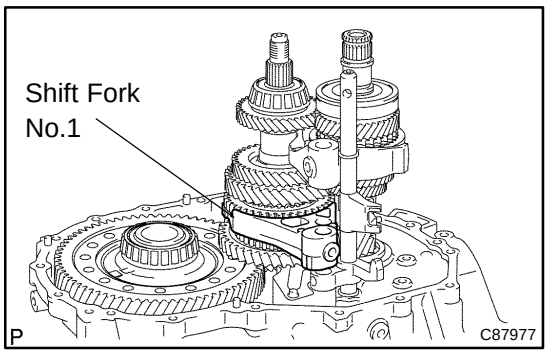

40. REMOVE GEAR SHIFT FORK NO.1

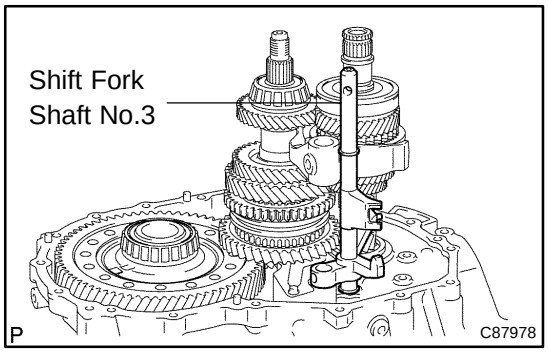

41. REMOVE GEAR SHIFT FORK SHAFT NO.3

(a) Remove the gear shift fork shaft No.3 from the manual transaxle case.

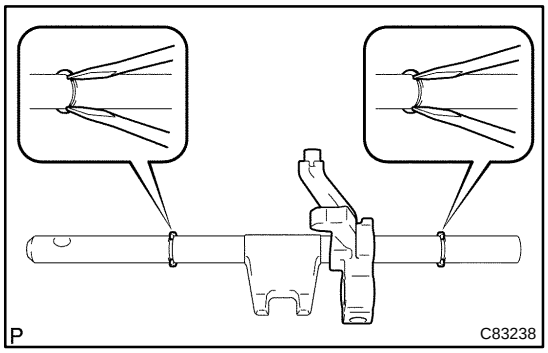

(b) Using 2 screwdrivers and a hammer, remove the 2 shift fork shaft snap rings from the gear shift fork shaft No. 3.

(c) Remove the reverse shift fork from the gear shift fork shaft No.3.

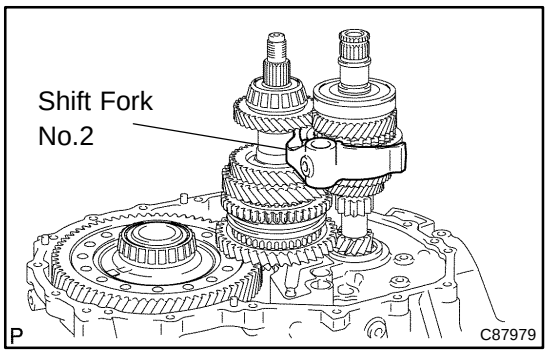

42. REMOVE GEAR SHIFT FORK NO.2

(a) Remove the gear shift fork No.2 from the input shaft assy.

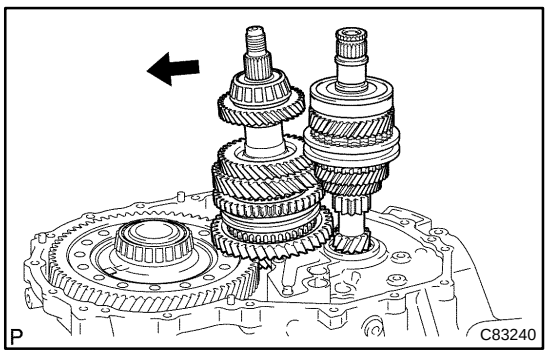

43. REMOVE INPUT SHAFT ASSY

(a) Incline the output shaft then remove the input shaft from the manual transaxle case.

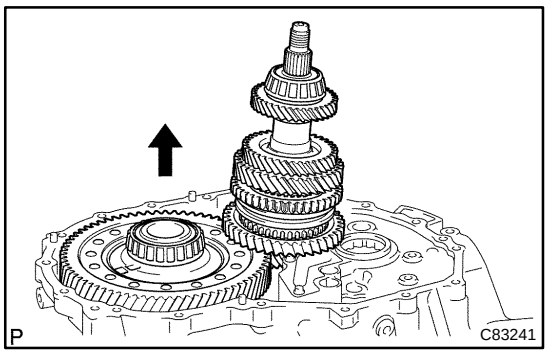

44. REMOVE OUTPUT SHAFT ASSY

(a) Remove the output shaft from the manual transaxle case.

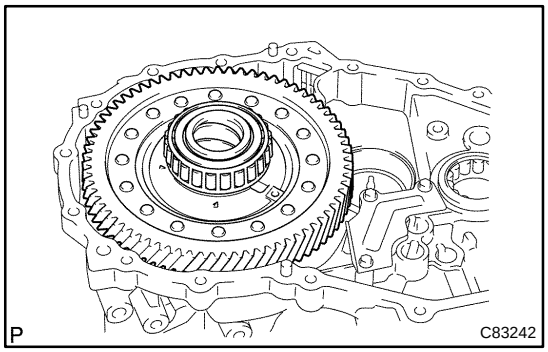

45. REMOVE DIFFERENTIAL CASE ASSY

(a) Remove the differential case assy from the manual transaxle case.

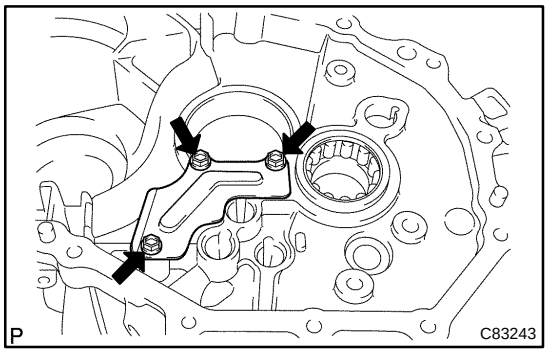

46. REMOVE MANUAL TRANSAXLE CASE RECEIVER

(a) Remove the 3 bolts and manual transaxle case receiver from the manual transaxle case.

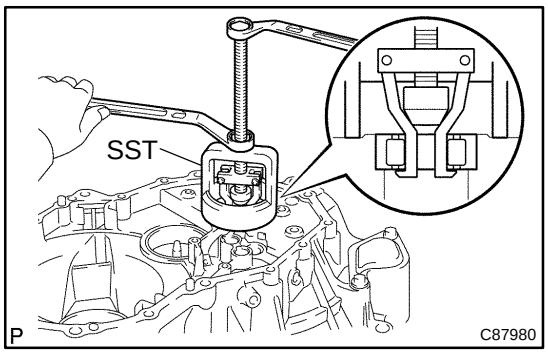

47. REMOVE INPUT SHAFT FRONT BEARING

(a) Using SST, remove the input shaft front bearing (outer race) from the manual transaxle case.
SST 09612−65014 (09612−01040, 09612−01050)

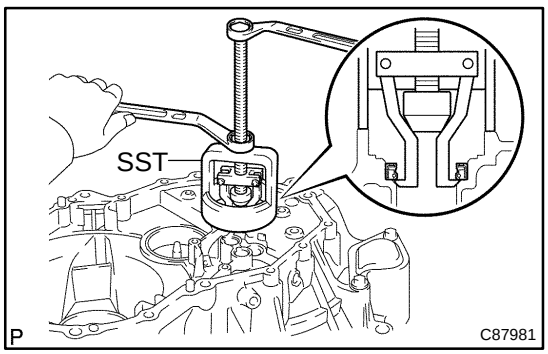

48. REMOVE FRONT TRANSAXLE CASE OIL SEAL

(a) Using SST, remove the manual transaxle case oil seal from the manual transaxle case.
SST 09612−65014 (09612−01040, 09612−01050)

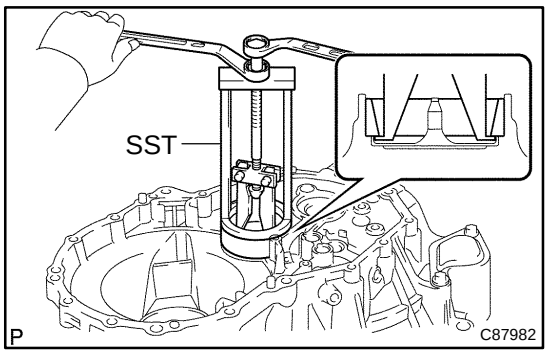

49. REMOVE OUTPUT SHAFT FRONT BEARING

(a) Using SST, remove the output shaft front bearing (outer race) from the manual transaxle case.
SST 09387−00041 (09387−02020, 09387−02010)

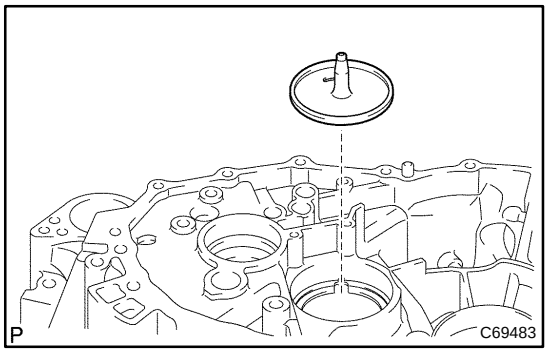

50. REMOVE OUTPUT SHAFT (MTM) COVER

(a) Remove the output shaft (MTM) cover from the manual transaxle case.

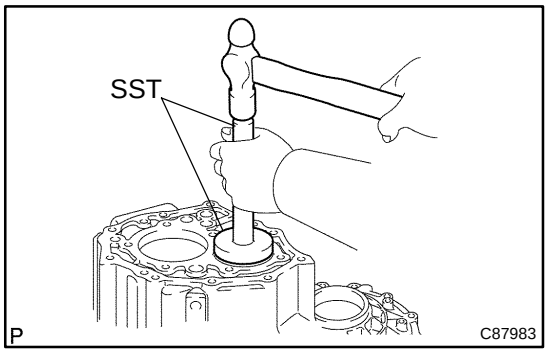

51. REMOVE OUTPUT SHAFT REAR BEARING

(a) Using SST, remove the output shaft rear bearing from the manual transmission case (outer race).
SST 09950−60010 (09951−00680), 09950−70010 (09951−07100)

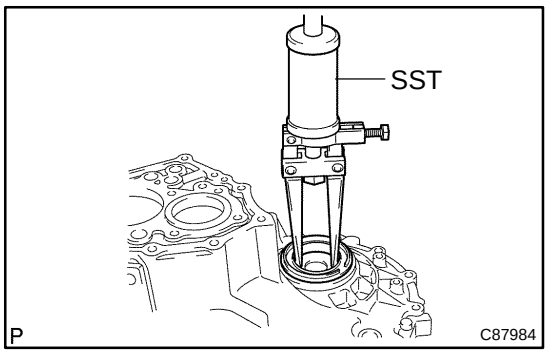

52. REMOVE TRANSMISSION CASE OIL SEAL

(a) Using SST, remove the transmission case oil seal from the manual transmission case.
SST 09308−00010

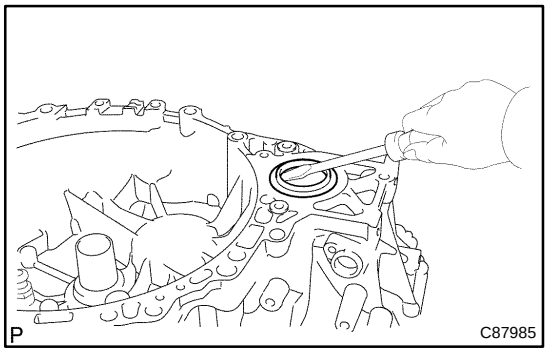

53. REMOVE FRONT TRANSAXLE CASE COVER OIL SEAL

(a) Using a screwdriver, remove the front transaxle case cover oil seal.

HINT:
Tape the screwdriver tip before use.

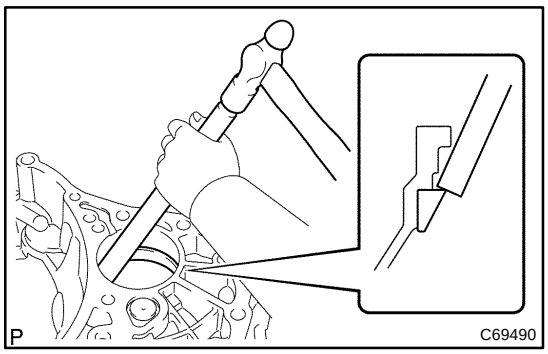

54. REMOVE FR DIFFERENTIAL CASE REAR TAPERED ROLLER BEARING

(a) Using a brass bar and a hammer, remove the FR differential case rear tapered roller bearing (outer race) from the manual transaxle case.

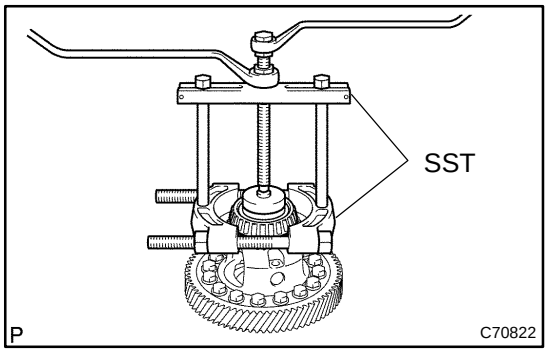

(b) Using SST, remove the front differential case rear tapered roller bearing from the front differential case.

SST 09950−00020, 09950−00030, 09950−40011 (09957−04010), 09950−60010 (09951−00560)

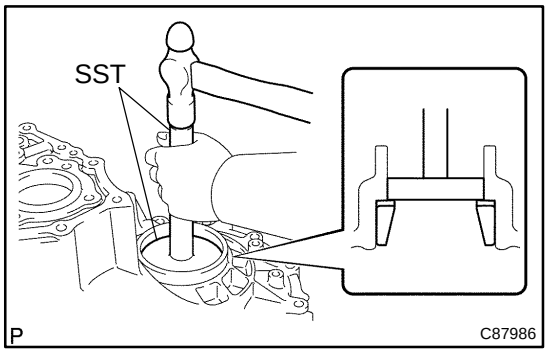

55. REMOVE FR DIFFERENTIAL CASE FRONT TAPERED ROLLER BEARING

(a) Using SST and hammer, remove the FR differential case front tapered roller bearing (outer race) and FR differential case rear shim from the manual transmission case.

SST 09950−60020 (09951−00790), 09950−70010 (09951−07100)

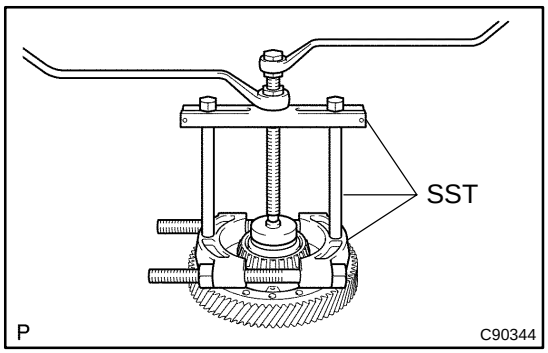

(b) Using SST, remove the FR differential case front tapered roller bearing (inner race) from front differential case.

SST 09950−00020, 09950−00030, 09950−40011 (09957−04010), 09950−60010 (09951−00490)

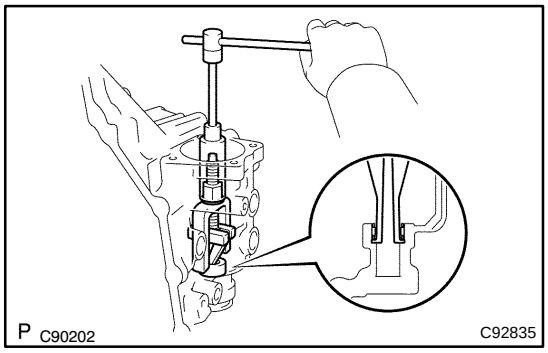

56. REMOVE CONTROL SHAFT COVER BIMETAL FORMED BUSH

(a) Using SST, remove the shift & select lever shaft bimetal formed bush.

SST 09319−60020

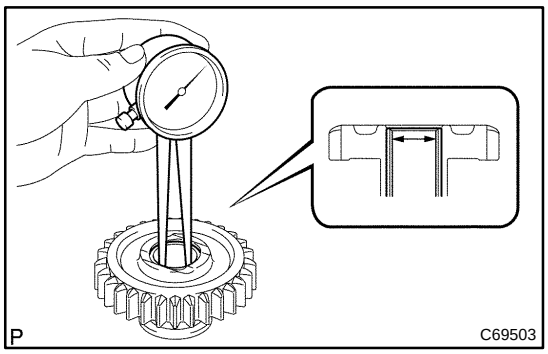

57. INSPECT REVERSE IDLER GEAR SUB−ASSY

(a) Using a callipers gauge, measure the inside diameter of the reverse idler gear.

Inside diameter: mm (in.)

Standard inside diameter	Maximum inside diameter
20.056 to 20.074 (0.7896 to 0.7903)	20.074 (0.7903)

If the inside diameter exceeds the maximum, replace the reverse idler gear.

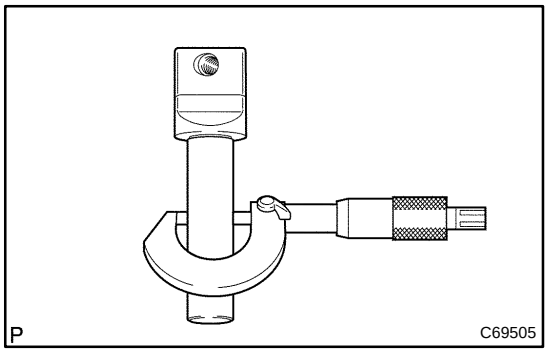

(b) Using a micro meter, measure the outer diameter of the reverse idler gear shaft.

Outer diameter: mm (in.)

Standard outer diameter	Minimum outer diameter
19.984 to 20.000 (0.7868 to 0.7874)	19.984 (0.7868)

If the outer diameter is less than the minimum, replace the reverse idler gear shaft.

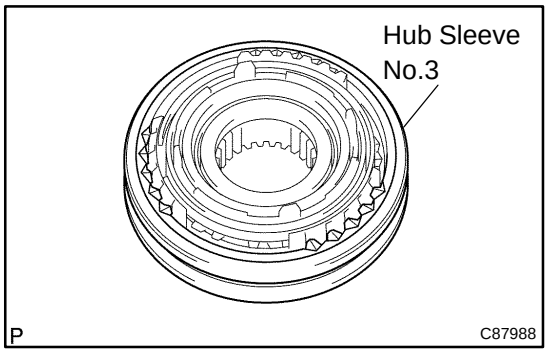

58. REMOVE TRANSMISSION HUB SLEEVE NO.3

(a) Remove the transmission hub sleeve No.3 from the transmission clutch hub No.3.

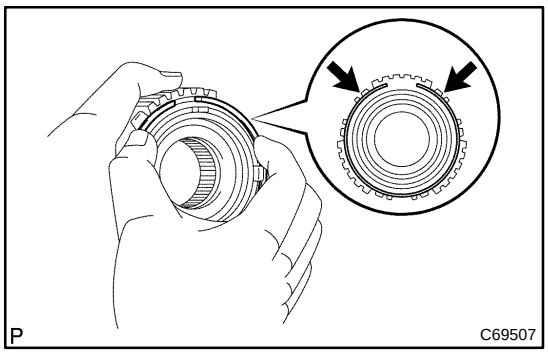

59. REMOVE SYNCHROMESH SHIFTING KEY SPRING NO.3

(a) Push the synchromesh shifting key spring No.3 then remove the 2 synchromesh shifting key spring No.3 from the transmission clutch hub No.3.

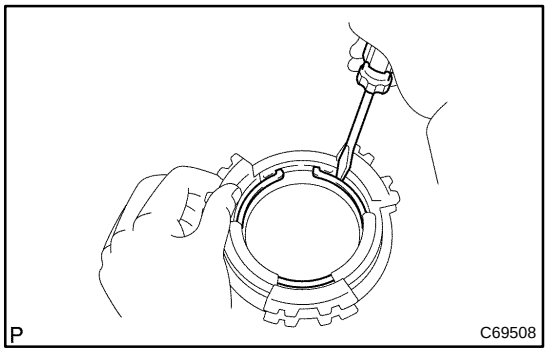

60. REMOVE SYNCHRONIZER PULL RING

(a) Using a screwdriver, remove the synchronizer pull ring snap ring.

(b) Remove the synchronizer pull ring, synchronizer outer ring No.5, synchronizer inner ring No.5 and synchronizer middle ring No.5 from the synchronizer ring No.5.

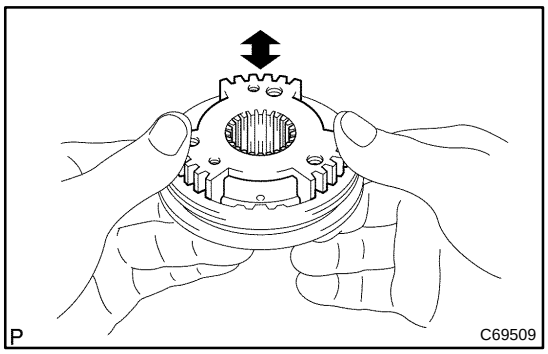

61. INSPECT TRANSMISSION CLUTCH HUB NO.3

(a) Inspect the sliding condition between transmission clutch hub No.3 and transmission hub sleeve No.3.

(b) Inspect tip of spline gear on the transmission hub sleeve No.3 for wear.

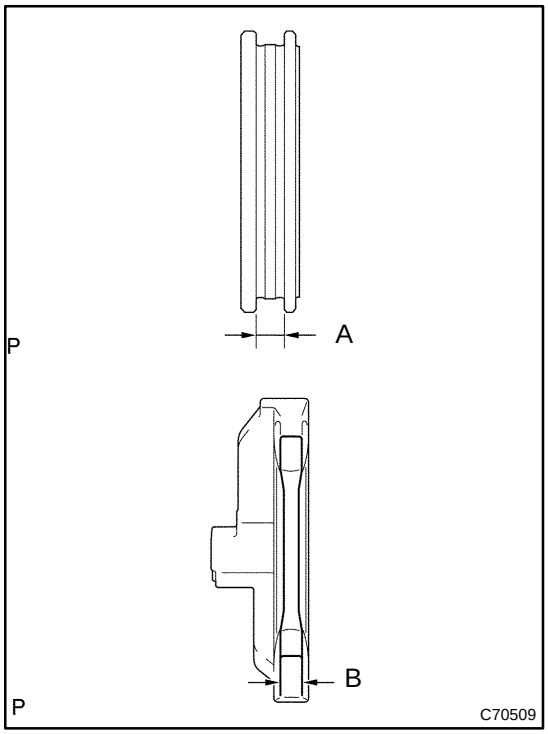

62. INSPECT TRANSMISSION HUB SLEEVE NO.3

(a) Using vernier calipers, measure the transmission hub sleeve No.3 groove and the thickness of the claw part on gear shift fork No.3, and calculate the clearance.

Standard clearance:

0.15 to 0.35 mm (0.0059 to 0.0138 in.) {A − B}

If the clearance is out of the specification, replace the transmission hub sleeve No.3 and gear shift fork No.3 with the new one.

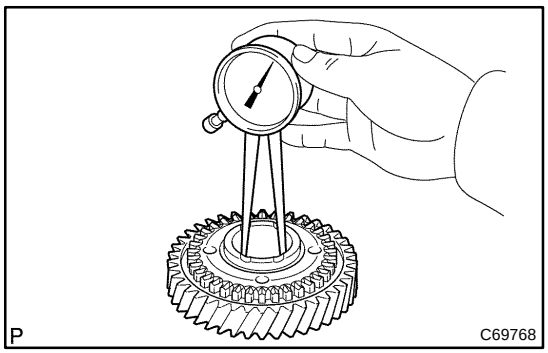

63. INSPECT 5TH GEAR

(a) Using a calipers gauge, measure the inside diameter of the 5th gear.

Inside diameter: mm (in.)

Standard inside diameter	Maximum inside diameter
34.981 to 34.997 (1.3772 to 1.3778)	34.997 (1.3778)

If the inner diameter exceeds the maximum, replace the 5th gear.

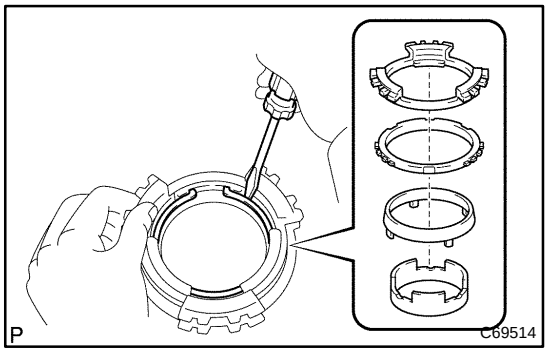

64. INSTALL SYNCHRONIZER PULL RING

(a) Install the synchronizer middle ring No.5, synchronizer ring outer No.5 and synchronizer pull ring to the synchronizer ring inner No.5. using a screwdriver, fix with snap ring.

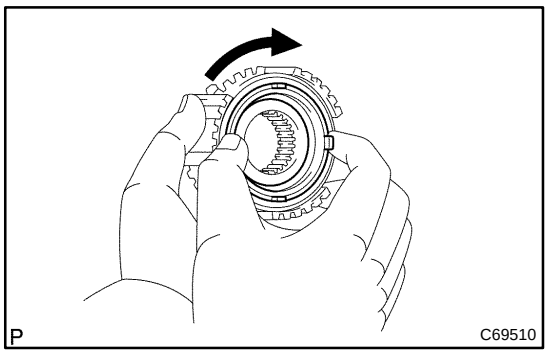

65. INSPECT SYNCHRONIZER RING MIDDLE NO.5

(a) Check that the synchronizer ring middle No.5 rotates smoothly.

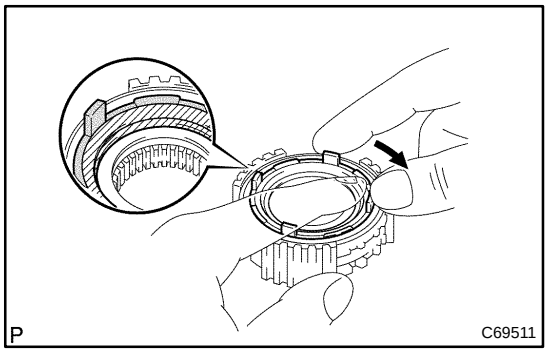

(b) Check that the synchronizer ring middle No.5 does not rotate while it is being pushed to the clutch hub No.3.

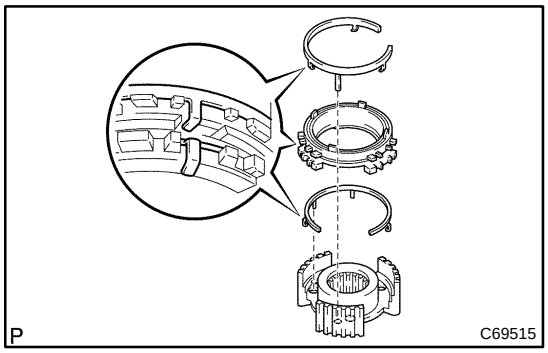

66. INSTALL SYNCHROMESH SHIFTING KEY SPRING NO.3

(a) Install the synchromesh shifting key spring No.3 to the transmission clutch hub No.3.

NOTICE:

Align the projection of the shifting key spring with the hole of the clutch hub No.3 and install them.

(b) Install the synchronizer ring set and synchromesh shifting key spring No.3 to the transmission clutch hub No.3.

NOTICE:

- **Engage the shifting key spring claw to the center of the teeth of the synchronizer ring.**
- **Align the projection of the shifting key spring with the hole of the clutch hub No.3 and install them.**

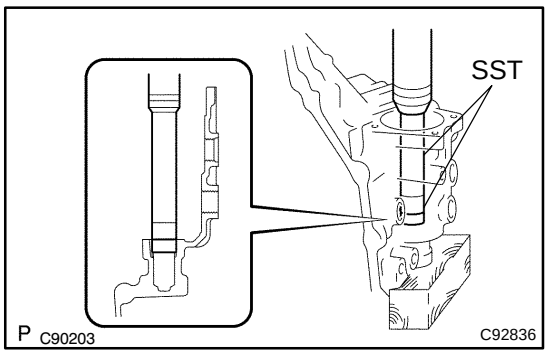

67. INSTALL CONTROL SHAFT COVER BIMETAL FORMED BUSH

(a) Using SST, install the shift & select lever shaft bimetal formed bush.

SST 09950−60010 (09951−00180), 09950−70010 (09951−07100)

Clearance:

0.081 to 0.149 mm (0.0032 to 0.0059 in.)

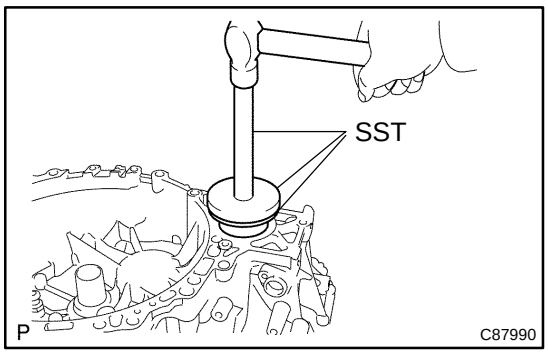

68. INSTALL FRONT TRANSAXLE CASE COVER OIL SEAL

(a) Using SST and a hammer, install the front transaxle case cover oil seal.

SST 09316−20011, 09950−60020 (09951−00910), 09950−70010 (09951−07150)

Oil seal driven in depth:
0 ± 0.5 mm (0 ± 0.020 in.)

(b) Coat the lip of front transaxle case cover oil seal with MP grease.

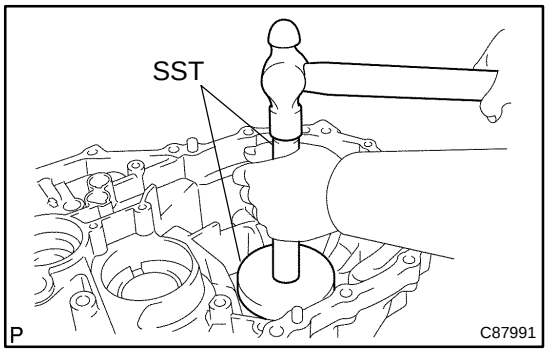

69. INSTALL FR DIFFERENTIAL CASE REAR TAPERED ROLLER BEARING

(a) Using SST and a hammer, install the FR differential case rear tapered roller bearing (outer race) to the front transaxle case.

SST 09950−60020 (09951−00910), 09950−70010 (09951−07100)

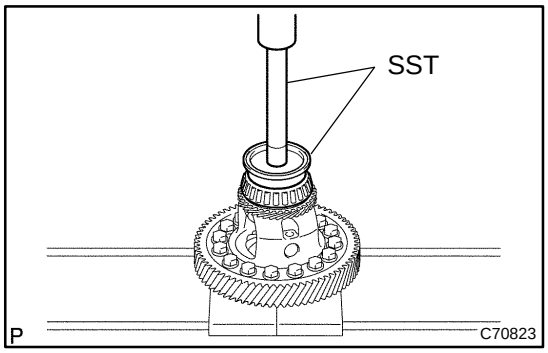

(b) Using SST and press, install the FR differential case rear tapered roller bearing (inner race) to the front differential case.

SST 09950−70010 (09951−07100, 09951−07150), 09608−10010

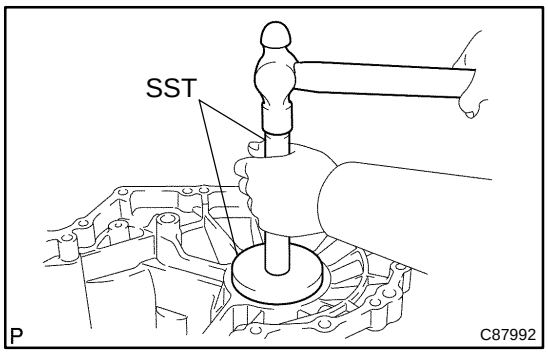

70. INSTALL FR DIFFERENTIAL CASE FRONT TAPERED ROLLER BEARING

(a) Install the front differential case shim rear.

(b) Using SST and a hammer, install FR differential case front tapered roller bearing (outer race).

SST 09950−60020 (09951−00890), 09950−70010 (09951−07100)

NOTICE:
Install the case shim as thick as the removed one.

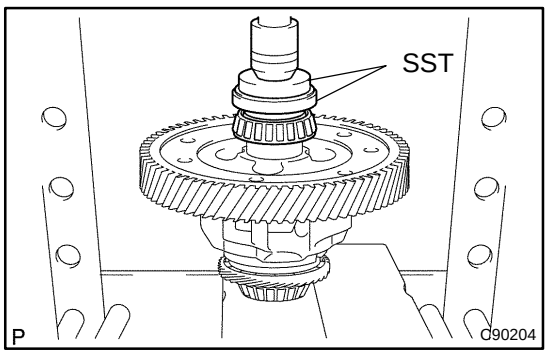

(c) Using SST, remove the FR differential case front tapered roller bearing (inner race)

SST 09631−12090, 09950−60010 (09951−00600), 09950−70010 (09951−07100)

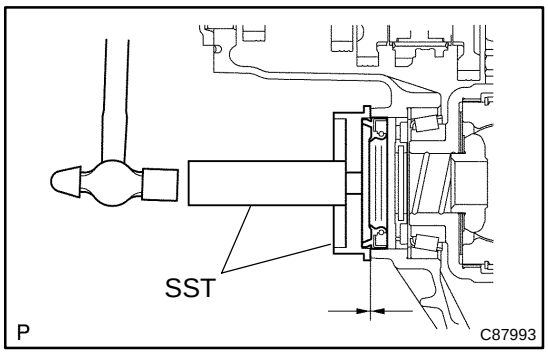

71. INSTALL TRANSMISSION CASE OIL SEAL

(a) Using SST and a hammer, install the transmission case oil seal to the manual transmission case.
SST 09608−32010, 09950−70010 (09951−07150)
Oil seal driven in depth:
3.5 ± 0.5 mm (0.138 ± 0.020 in.)

(b) Coat the lip of transmission case oil seal with MP grease.

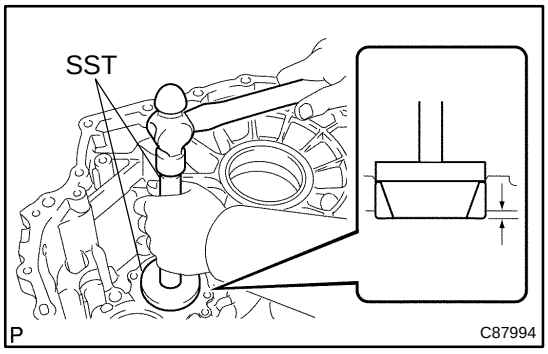

72. INSTALL OUTPUT SHAFT REAR BEARING

(a) Using SST and a hammer, install the output shaft rear bearing (outer race) to the manual transmission case.
SST 09950−60020 (09951−00680), 09950−70010 (09951−07100)
Clearance: 3.8 to 4.4 mm (0.150 to 0.173 in.)

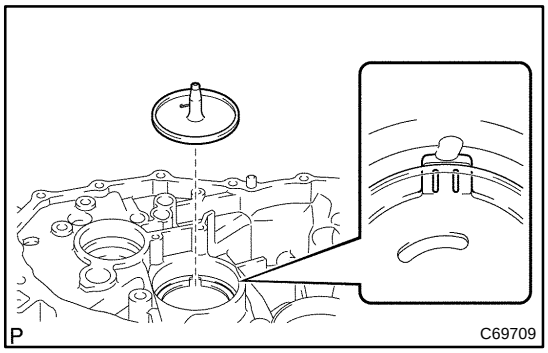

73. INSTALL OUTPUT SHAFT (MTM) COVER

(a) Coat the output shaft (MTM) cover with MP grease, install it to the manual transaxle case.

NOTICE:
Align the projection of the output shaft with the transmission grooves and install them.

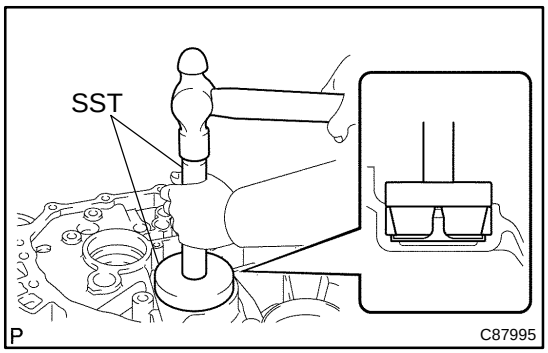

74. INSTALL OUTPUT SHAFT FRONT BEARING

(a) Using SST and a hammer, install the output shaft front bearing (outer race).
SST 09950−60020 (09951−00730), 09950−70010 (09951−07100)

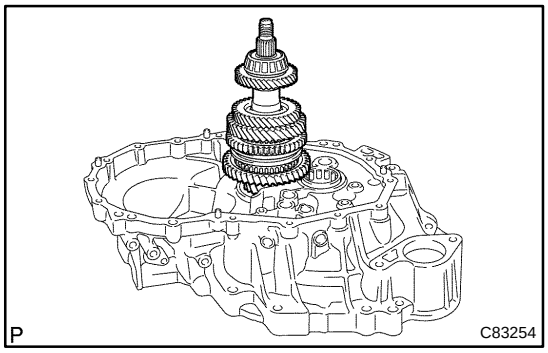

75. ADJUST OUTPUT SHAFT BEARING PRELOAD

(a) Install the output shaft to the manual transaxle case.

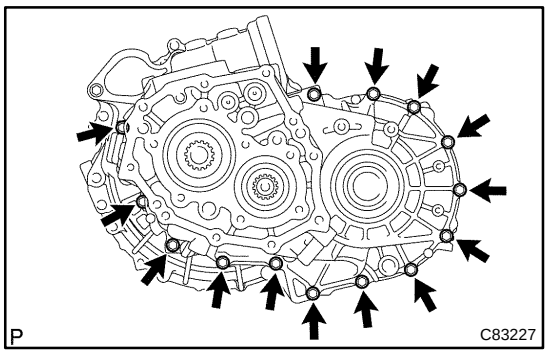

(b) Install the transmission case with 14 bolts to the manual transaxle case.
Torque: 29 N·m (296 kgf·cm, 21 ft·lbf)

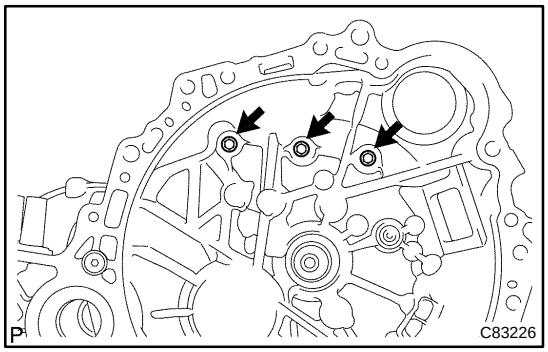

(c) Install the 3 bolts to the manual transaxle side.
Torque: 29 N·m (296 kgf·cm, 21 ft·lbf)

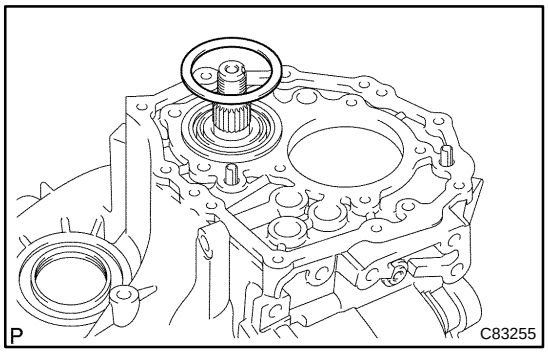

(d) Install the output shaft rear bearing shim to the output shaft.

HINT:
Install the same thickness of case shim as the removed one.

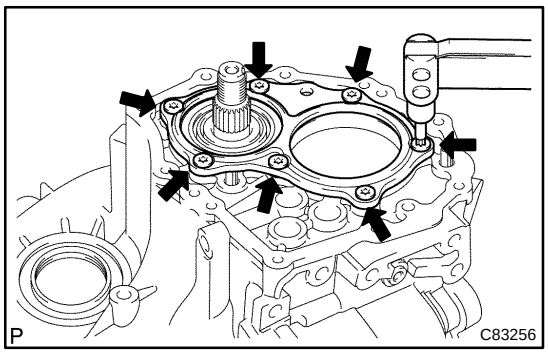

(e) Using a torx® socket wrench (T45), install the bearing retainer RR with 7 screws to the manual transmission case.
Torque: 43 N·m (438 kgf·cm, 32 ft·lbf)

(f) Install the new output rear set nut to the output shaft.

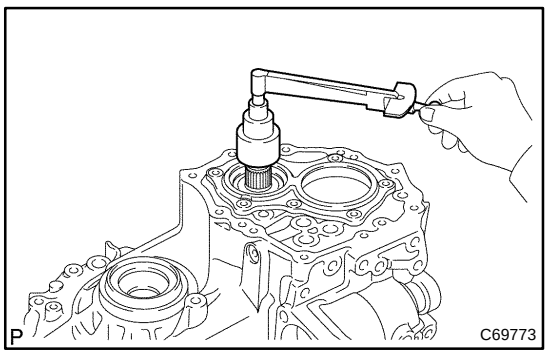

(g) Turn the output shaft in both directions to make it smooth.

(h) Using a socket wrench and torque wrench, inspect the preload.

Preload: N·m (kgf·cm, in.·lbf)

Bearing	Torque
New	0.8 to 1.6 (8.16 to 16.32, 7.1 to 14.2)
Used	0.5 to 1.0 (5.10 to 10.20, 4.4 to 8.9)

(i) If the preload is out of the specification, select the output shaft rear bearing shim and adjust it.

HINT:

The preload of the output shaft rear bearing shim varies in torque from about 0.04 to 0.06 N·m in one size.

Shim: mm (in.)

Part No.	thickness: mm (in.)	Make
90564−59001	1.30 (0.0512)	0
90564−59002	1.35 (0.0531)	1
90564−59003	1.40 (0.0551)	2
90564−59004	1.45 (0.0571)	3
90564−59005	1.50 (0.0591)	4
90564−59006	1.55 (0.0610)	5
90564−59007	1.60 (0.0630)	6
90564−59008	1.65 (0.0650)	7
90564−59009	1.70 (0.0669)	8
90564−59010	1.75 (0.0689)	9
90564−59011	1.80 (0.0709)	A
90564−59012	1.85 (0.0728)	B
90564−59013	1.90 (0.0748)	C
90564−59014	1.95 (0.0768)	D
90564−59015	2.00 (0.0787)	E
90564−59016	2.05 (0.0807)	F
90564−59017	2.10 (0.0827)	G
90564−59018	2.15 (0.0846)	H
90564−59019	2.20 (0.0866)	J
90564−59020	2.25 (0.0886)	K
90564−59021	2.30 (0.0906)	L
90564−59022	2.35 (0.0925)	M
90564−59023	2.40 (0.0945)	N
90564−59024	2.45 (0.0965)	P
90564−59025	2.50 (0.0984)	Q

(j) Remove the output shaft rear set nut from the output shaft.

(k) Using a torx® socket wrench (T45), remove the 7 screws and bearing retainer RR from the manual transmission case.

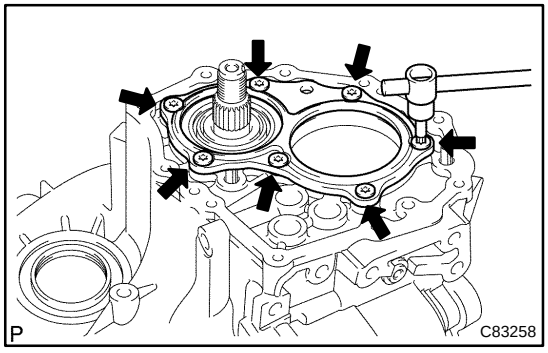

(l) Remove the output shaft rear bearing shim from the output shaft.

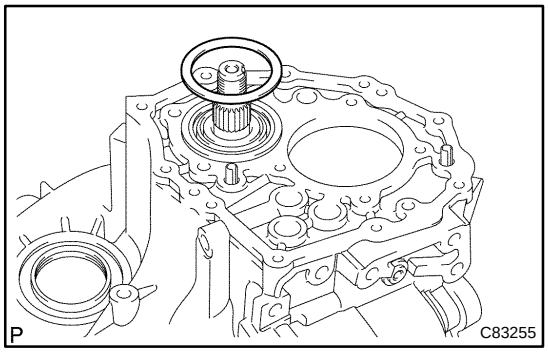

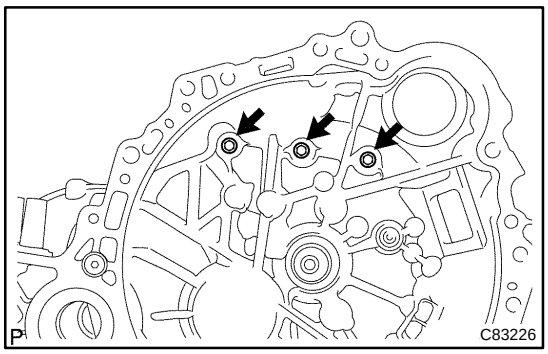

(m) Remove the 3 bolts.

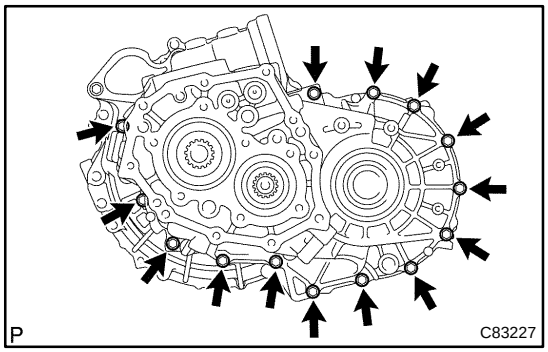

(n) Remove the 14 bolts and manual transmission case from the manual transaxle case.

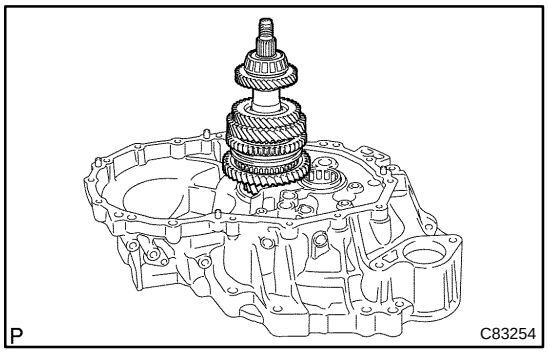

(o) Remove the output shaft assy from the front manual transaxle case.

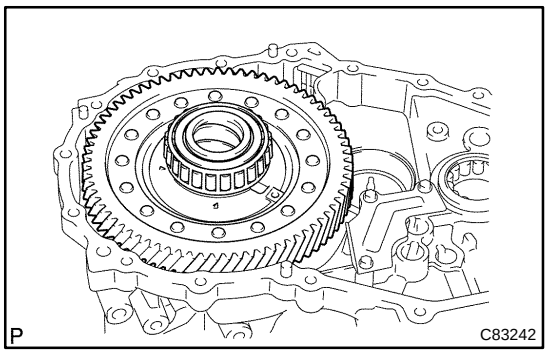

76. ADJUST TAPERED POLLER BEARING PRELOAD

(a) Install differential case assy to the manual transaxle case.

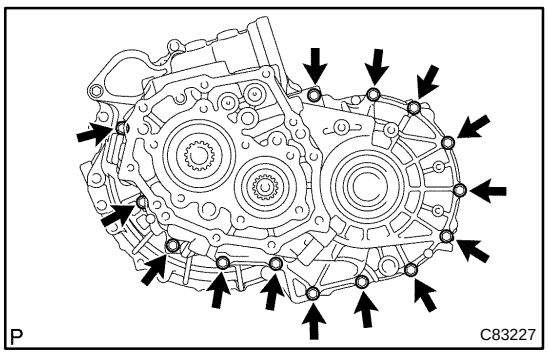

(b) Install the 14 bolts and manual transmission case to the manual transaxle case.
Torque: 29 N·m (296 kgf·cm, 21 ft·lbf)

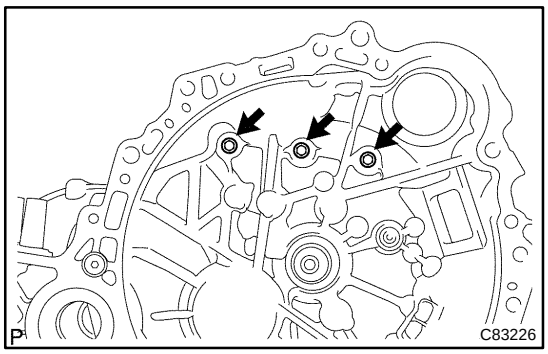

(c) Install the 3 bolts and front manual transaxle case side.
Torque: 29 N·m (296 kgf·cm, 21 ft·lbf)

(d) Turn the differential case in both directions to make it smooth.

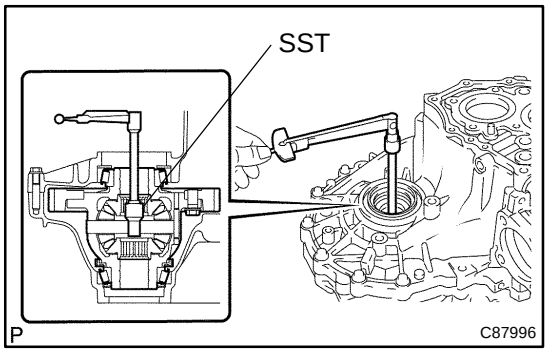

(e) Using SST and torque wrench, inspect preload.
SST 09564−32011

Preload: N·m (kgf·cm, in.·lbf)

Bearing	Torque
New	0.8 to 1.6 (8.16 to 16.32, 7.1 to 14.2)
Used	0.5 to 1.0 (5.10 to 10.2, 4.4 to 8.9)

If the preload is out of the specification, select the front differential case shim RR and adjust it.

HINT:

The preload of the front differential case shim RR varies in torque from about 0.04 to 0.06 N·m is one size.

Shim: mm (in.)

Part No.	Thickness	Mark
90564−56055	2.00 (0.0787)	0
90564−56056	2.05 (0.0807)	1
90564−56057	2.10 (0.0827)	2
90564−56058	2.15 (0.0846)	3
90564−56059	2.20 (0.0866)	4
90564−56060	2.25 (0.0886)	5
90564−56061	2.30 (0.0906)	6
90564−56062	2.35 (0.0925)	7
90564−56063	2.40 (0.0945)	8
90564−56064	2.45 (0.0965)	9
90564−56065	2.50 (0.0984)	A
90564−56066	2.55 (0.1004)	B
90564−56067	2.60 (0.1024)	C
90564−56068	2.65 (0.1043)	D
90564−56069	2.70 (0.1063)	E
90564−56070	2.75 (0.1083)	F
90564−56071	2.80 (0.1102)	G
90564−56072	2.85 (0.1122)	H

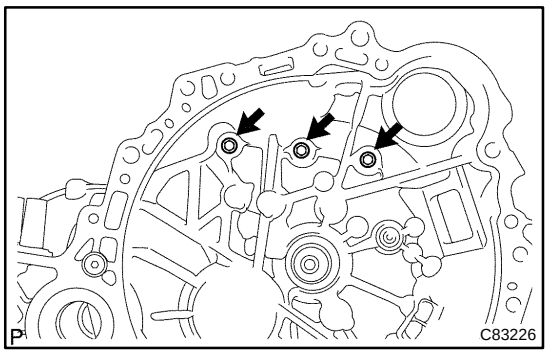

(f) Remove the 3 bolts.

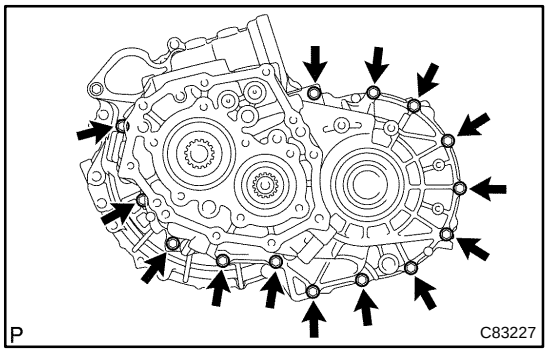

(g) Remove the 14 bolts and manual transmission case to the manual transaxle case.

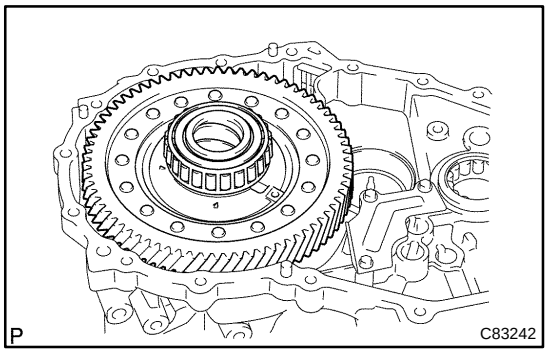

(h) Remove the differential case assy from the manual transaxle case.

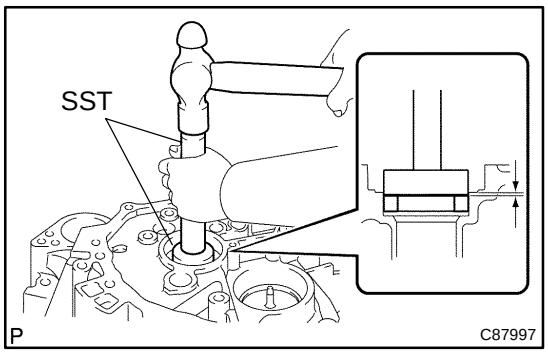

77. INSTALL FRONT TRANSAXLE CASE OIL SEAL

(a) Using SST and a hammer, install the front transaxle case oil seal No.1 to the manual transaxle case.
SST 09950−60010 (09951−00420), 09950−70010 (09951−07150)

(b) Coat the lip of front transaxle case oil seal No.1 with MP grease.
Clearance: 1 to 2 mm (0.0394 to 0.0787 in.)

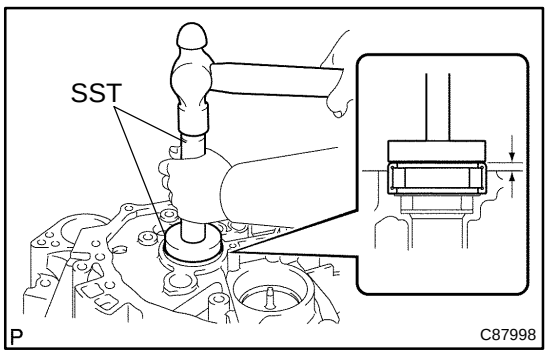

78. INSTALL INPUT SHAFT FRONT BEARING

(a) Coat the input shaft front bearing with gear oil, install it to the manual transaxle case.
SST 09950−60010 (09951−00570), 09950−70010 (09951−07150)
Clearance: 4.28 to 4.60 mm (0.1685 to 0.1811 in.)

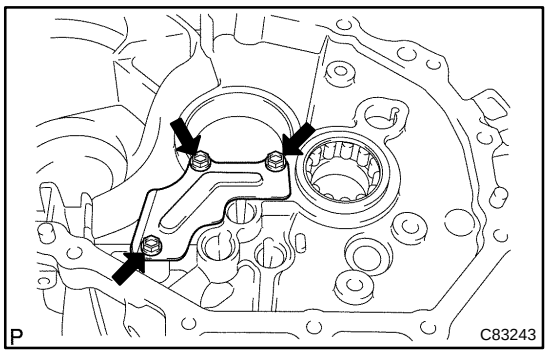

79. INSTALL MANUAL TRANSAXLE CASE RECEIVER

(a) Install the 3 bolts and manual transaxle case receiver to the manual transaxle case.
Torque: 7.0 N·m (71 kgf·cm, 62 in.·lbf)

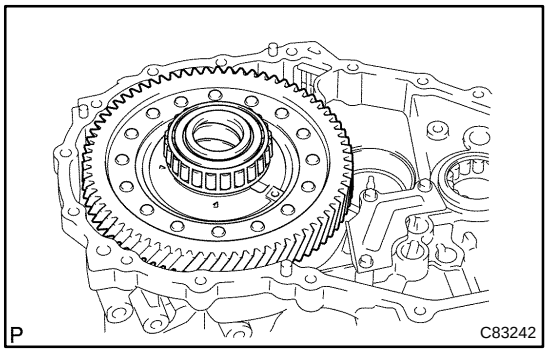

80. INSTALL DIFFERENTIAL CASE ASSY

(a) Coat the differential case taper roller bearing with gear oil, install the differential case assy to the manual transaxle case.

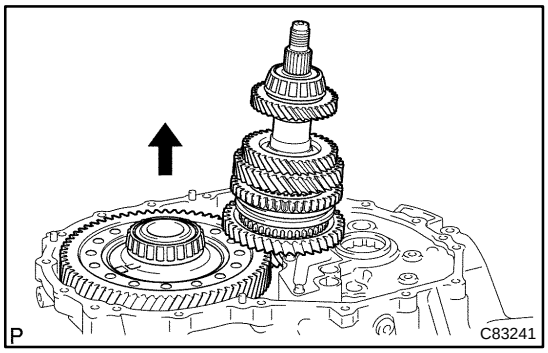

81. INSTALL OUTPUT SHAFT ASSY

(a) Apply gear oil to each sliding part of the output shaft assy.
(b) Lift the differential case assy up with the output shaft assy leaned, and install it to the manual transaxle case.

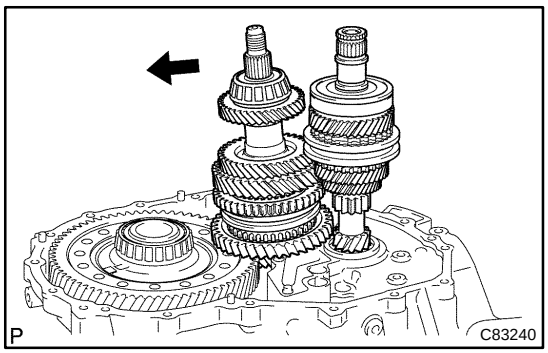

82. INSTALL INPUT SHAFT ASSY

(a) Apply gear oil to each sliding part of the input shaft assy.
(b) With the output shaft assy leaned, install the input shaft assy to the manual transaxle case.

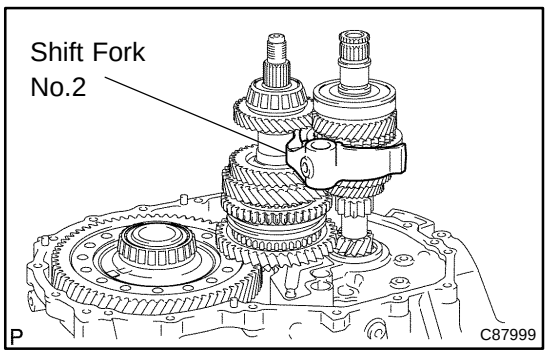

83. INSTALL GEAR SHIFT FORK NO.2

(a) Coat the gear shift fork No.2 with gear oil, install it to the input shaft assy.

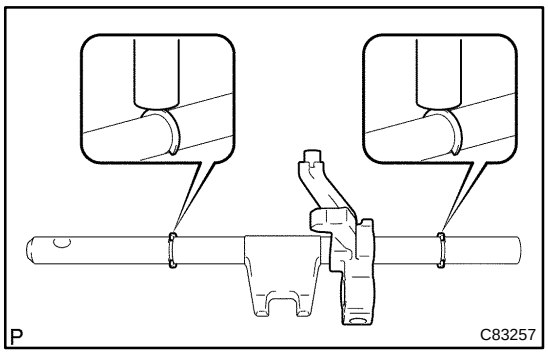

84. INSTALL GEAR SHIFT FORK NO.3

(a) Install the gear shift fork No.3 to the gear shift fork shaft No.3.

(b) Using a brass bar and hammer, install the 2 shift fork shaft snap rings to the gear shift fork shaft.

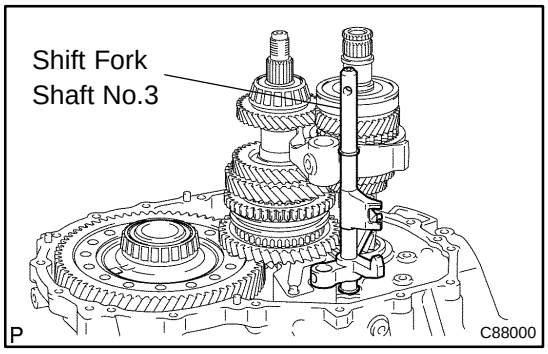

(c) Apply gear oil to each sliding part of the gear shift fork shaft No.3, install it to the manual transaxle case.

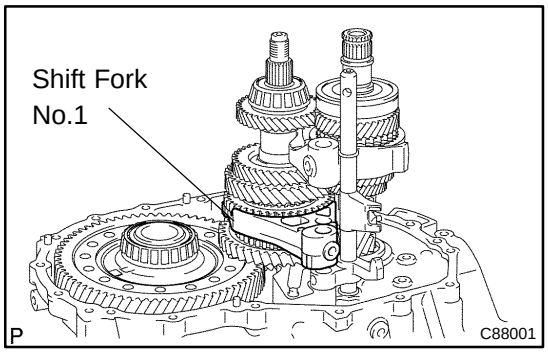

85. INSTALL GEAR SHIFT FORK NO.1

(a) Apply gear oil to each sliding part of the gear shift fork No.1, install it to the output shaft assy.

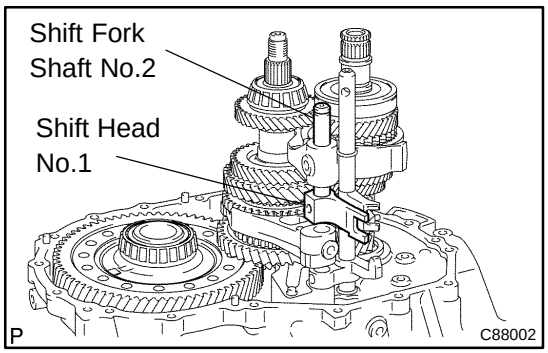

86. INSTALL GEAR SHIFT FORK SHAFT NO.2

(a) Install the gear shift head No.1 to the gear shift fork shaft No.2.

(b) Apply gear oil to each sliding part of the gear shift fork shaft No.2, install it to the manual transaxle case.

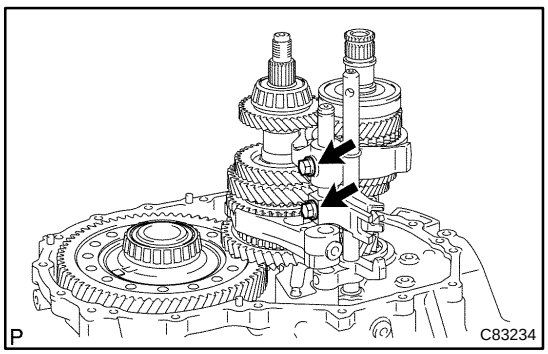

(c) Install the 2 shift fork bolts to the gear shift head No.1.
Torque: 24 N·m (245 kgf·cm, 18 ft·lbf)

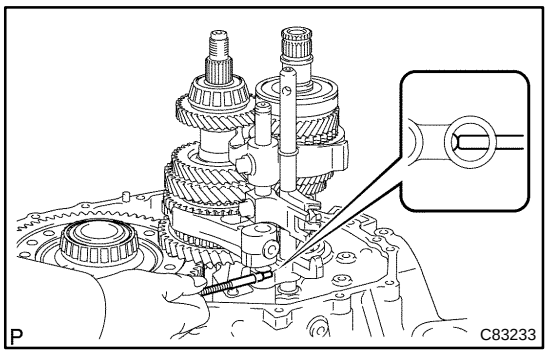

87. INSTALL REVERSE SHIFT FORK ROLLER

(a) Using a magnetic finger, install the reverse shift fork roller to the reverse shift fork.

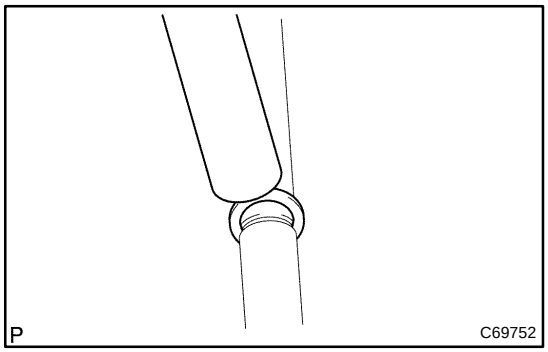

88. INSTALL GEAR SHIFT FORK SHAFT NO.1

(a) Using a brass bar and hammer, install the shift fork shaft snap ring to the shift fork shaft No.1.

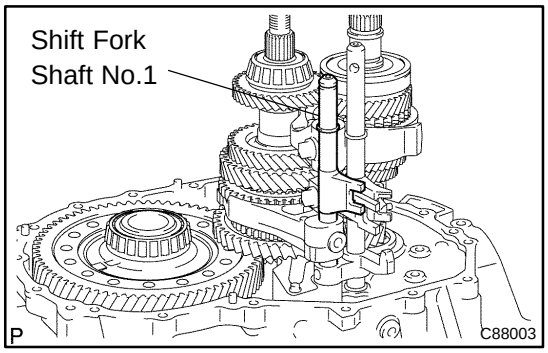

(b) Install the gear shift fork shaft No.1 to the manual transaxle case.

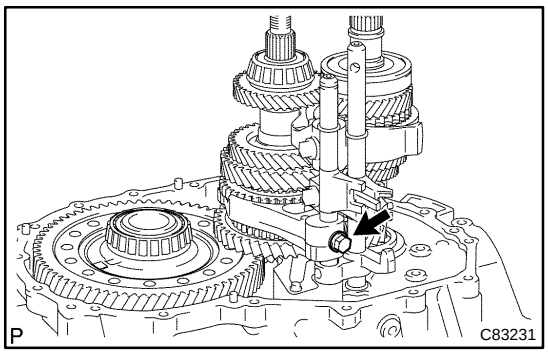

(c) Install the shift fork bolt to the gear shift fork No.1.
Torque: 24 N·m (245 kgf·cm, 18 ft·lbf)

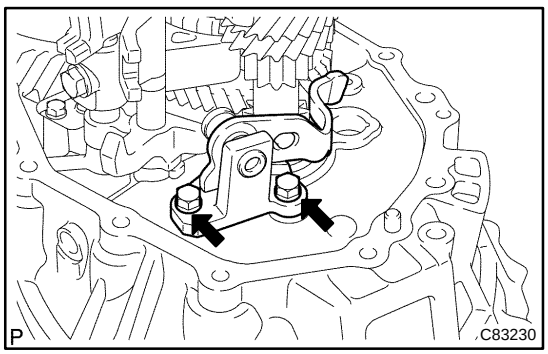

89. INSTALL REVERSE SHIFT ARM BRACKET ASSY

(a) Install the 2 bolts and reverse shift arm bracket assy to the manual transaxle case.
Torque: 17 N·m (173 kgf·cm, 13 ft·lbf)

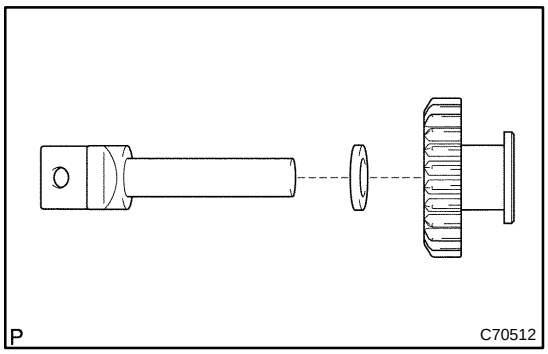

90. INSTALL REVERSE IDLER GEAR SUB−ASSY

(a) Coat the reverse idler gear and reverse idler thrust washer with MP grease, install them to the reverse idler gear shaft.

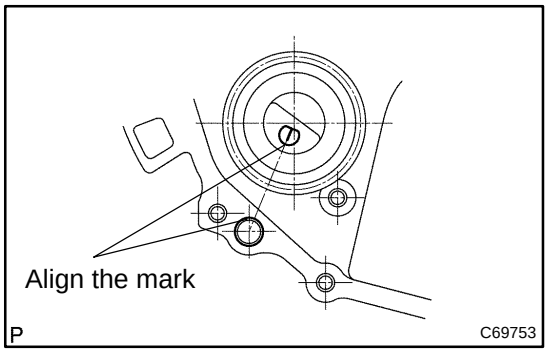

(b) Install the reverse idler gear to the manual transaxle case.

HINT:

Align the mark of the reverse idler gear shaft with the hole of the bolt.

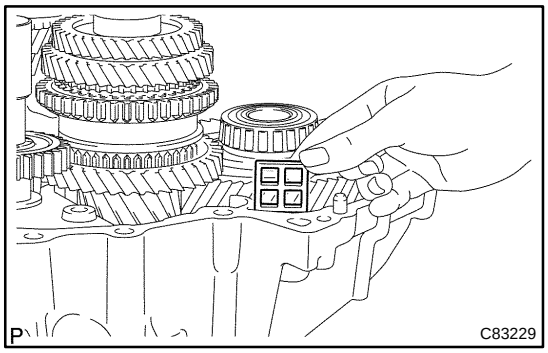

91. INSTALL TRANSMISSION MAGNET

(a) Clean the transmission magnet, install it to the manual transaxle case.

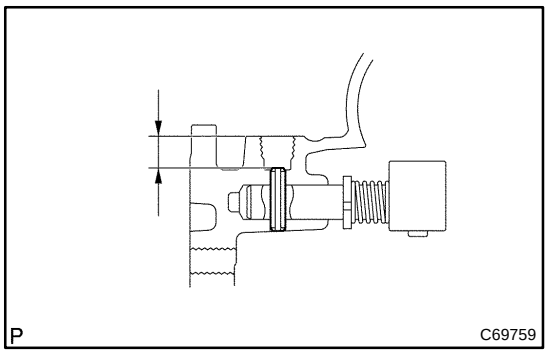

92. INSTALL REVERSE RESTRICT PIN ASSY

(a) Using a pin punch (ϕ 5mm), install the reverse restrict pin and reverse restrict pin assy.

Clearance: 12.5 to 13.5 mm (0.492 to 0.531 in.)

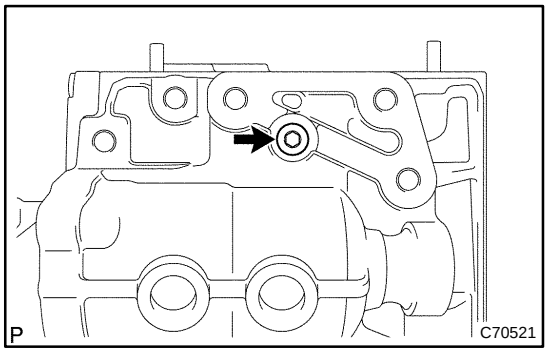

(b) Coat the reverse restrict pin plug with adhesive 1324, using hexagon wrench (6mm), install the manual transmission case.

Torque: 13 N·m (133 kgf·cm, 9.6 ft·lbf)

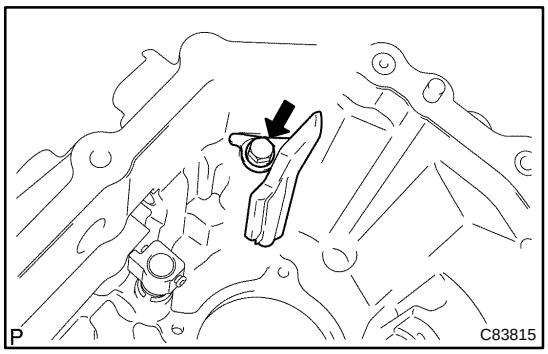

93. INSTALL OIL RECEIVER PIPE NO.1 (MTM)

(a) Install the bolt and oil receiver pipe No.1 (MTM) to the manual transmission case.
Torque: 17 N·m (173 kgf·cm, 13 ft·lbf)

HINT:
Tighten the oil receiver pipe No.1 with the bolt.

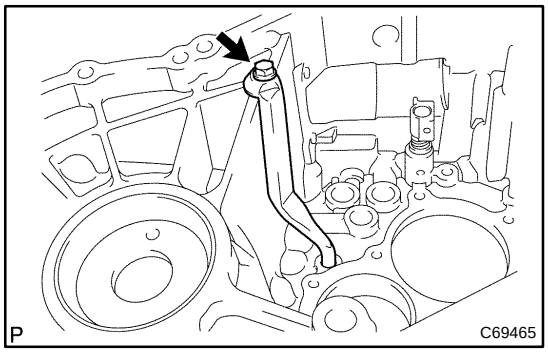

94. INSTALL OIL RECEIVER PIPE NO.2 (MTM)

(a) Install the bolt and oil receiver pipe No.2 (MTM) to the manual transmission case.
Torque: 17 N·m (173 kgf·cm, 13 ft·lbf)

HINT:
Tighten the oil receiver pipe No.2 (MTM) with the bolt while manual transmission case is being put.

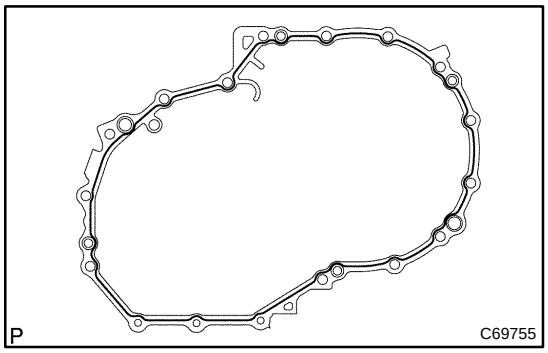

95. INSTALL MANUAL TRANSMISSION CASE

(a) Apply FIPG bead condition sequentially to the position shown in the diagram of the manual transmission case.

HINT:
Install within 10 minutes after applying FIPG.

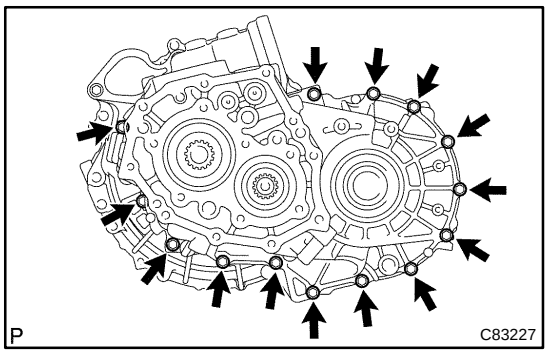

(b) Install the manual transmission case and 14 bolts to the manual transaxle case.
Torque: 29 N·m (296 kgf·cm, 21 ft·lbf)

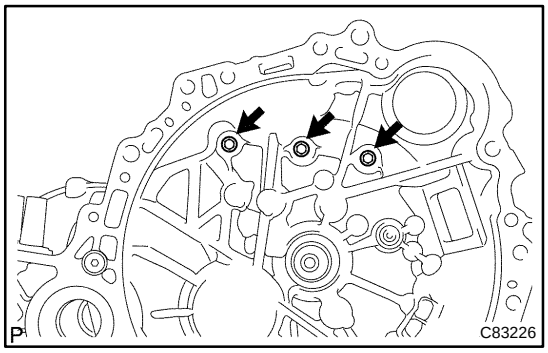

(c) Install the 3 bolts to the manual transaxle case side.
Torque: 29 N·m (296 kgf·cm, 21 ft·lbf)

96. INSTALL CLUTCH TUBE BRACKET NO.1

(a) Install the clutch tube with 3 bolt brackets.
Torque: 17 N·m (173 kgf·cm, 13 ft·lbf)

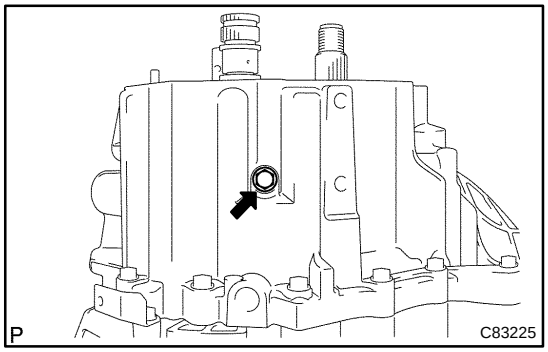

97. INSTALL REVERSE IDLER GEAR SHAFT BOLT

(a) Coat the bolt with sealant, install new gasket to the manual transmission case with the bolt.
Torque: 30 N·m (306 kgf·cm, 22 ft·lbf)
Sealant:
Part No. 08833−00080, THREE BOND 1344, LOCTITE 242 or equivalent

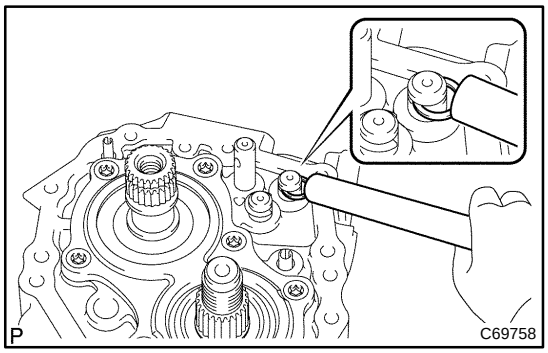

98. INSTALL SHIFT FORK SHAFT SHAFT SNAP RING

(a) Using a brass bar and hammer, install the shift fork shaft snap ring to the gear shift fork shaft No.1.

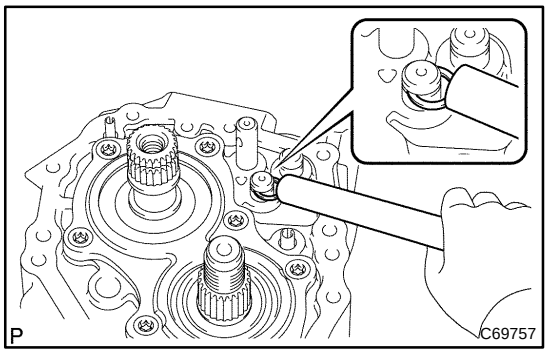

(b) Using a brass bar and hammer, install the shift fork shaft snap ring to the gear shift fork shaft No.2.

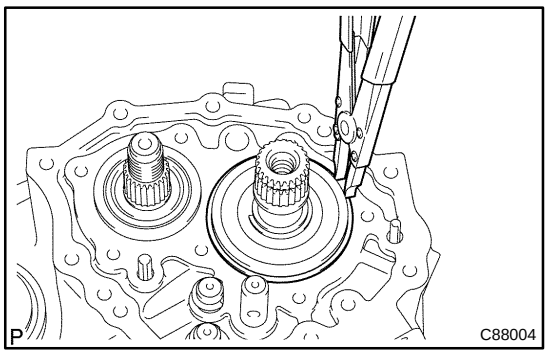

99. INSTALL INPUT SHAFT REAR BEARING SHAFT SNAP RING

(a) Using a snap ring expander, install the input shaft rear bearing hole snap ring.

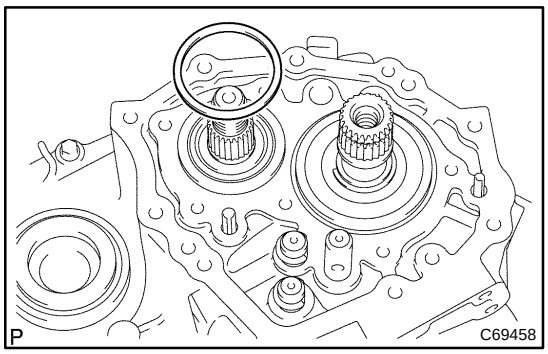

100. INSTALL OUTPUT SHAFT REAR BEARING SHIM

(a) Install the output shaft rear bearing shim to the output shaft.

HINT:

Install a case shim with the same thickness as the removed one.

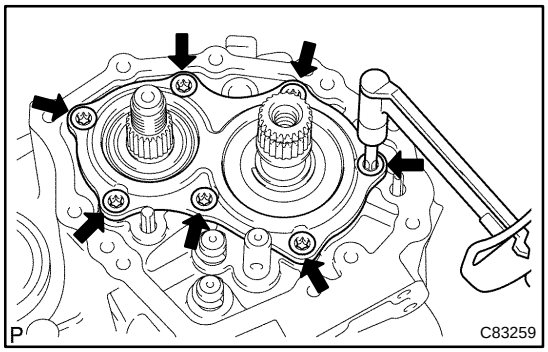

101. INSTALL BEARING RETAINER REAR (MTM)

(a) Coat the bearing retainer rear (MTM) with sealant, install it with a torx® wrench (T45).
Torque: 42 N·m (428 kgf·cm, 31 ft·lbf)

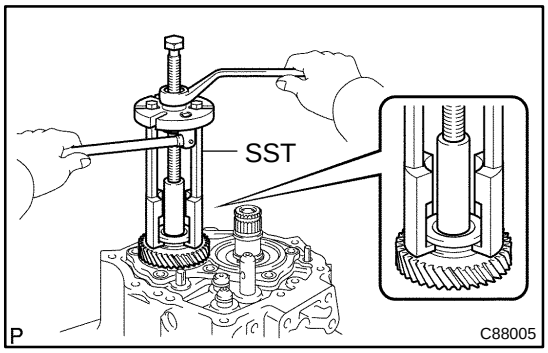

102. INSTALL 5TH DRIVEN GEAR

(a) Using SST, install the 5th driven gear to the output shaft.
SST 09950−30012 (09951−03010, 09953−03010, 09954−03010, 09956−03030, 09955−03011)

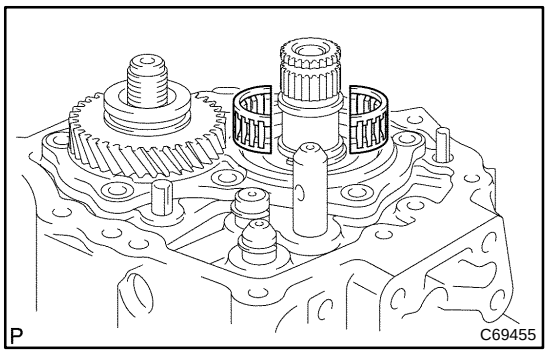

103. INSTALL 5TH GEAR NEEDLE ROLLER BEARING

(a) Coat the 5th gear needle roller bearing with gear oil, install it to the input shaft.

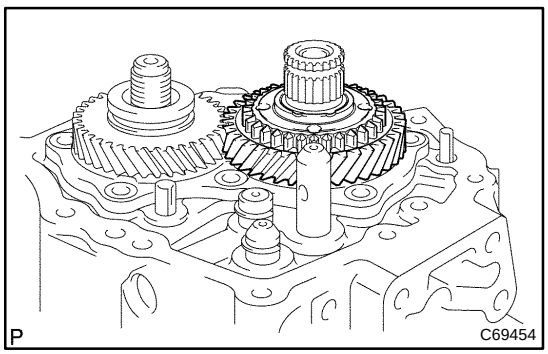

104. INSTALL 5TH GEAR

(a) Coat the 5th gear with gear oil, install it to the input shaft.

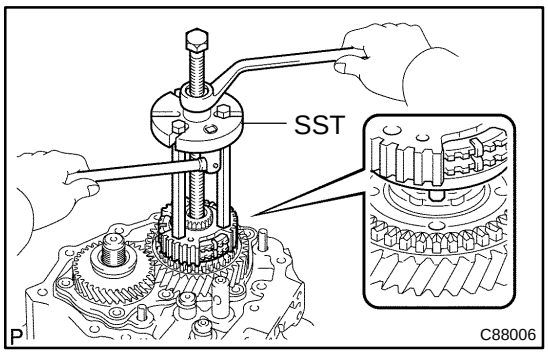

105. INSTALL TRANSMISSION CLUTCH HUB NO.3

(a) Using SST, install the transmission clutch hub No.3 to the input shaft.

SST 09950−30012 (09951−03010, 09953−03010, 09954−03010)

NOTICE:

Align the projection of the synchronizer ring with the hole of the 5th gear and install them.

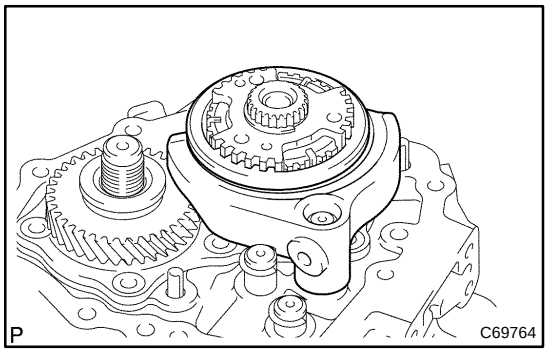

(b) Install the transmission hub sleeve No.3 and gear shift fork No.3 to the transmission clutch hub No.3.

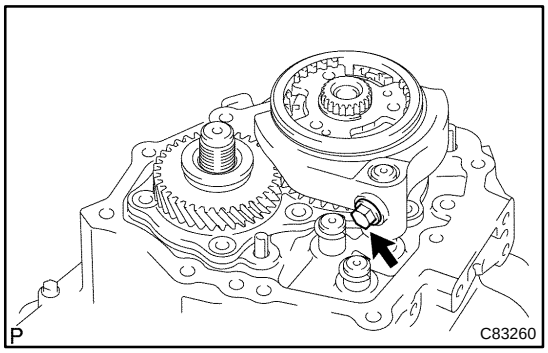

(c) Coat the shift fork bolt with sealant, install the gear shift fork No. 3.

Sealant:

Part No. 08833−00080, THREE BOND 1344, LOCTITE 242 or equivalent

Torque: 24 N·m (245 kgf·cm, 18 ft·lbf)

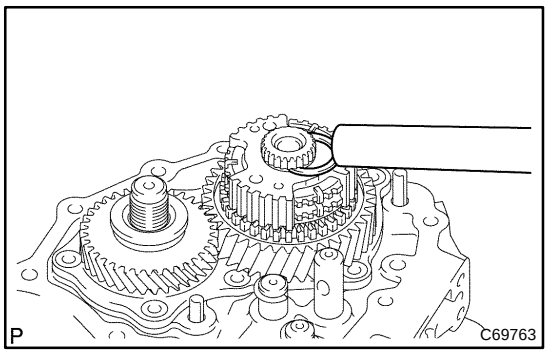

(d) Select a snap ring that will allow minimum axial play. Using a brass bar and a hammer, install the shaft snap ring.

Clearance: 0.1 mm or less

Snap ring: mm (in.)

Part No.	Thickness	Mark
90520−27061	1.75 to 1.80 (0.0689 to 0.0709)	a
90520−27062	1.80 to 1.85 (0.0709 to 0.0728)	b
90520−27063	1.85 to 1.90 (0.0728 to 0.0748)	c
90520−27064	1.90 to 1.95 (0.0748 to 0.0768)	d
90520−27065	1.95 to 2.00 (0.0768 to 0.0787)	e
90520−27066	2.00 to 2.05 (0.0787 to 0.0807)	f
90520−27067	2.05 to 2.10 (0.0807 to 0.0827)	g

Part No.	Thickness	Mark
90520−27068	2.10 to 2.15 (0.0827 to 0.0846)	h
90520−27069	2.15 to 2.20 (0.0846 to 0.0866)	j

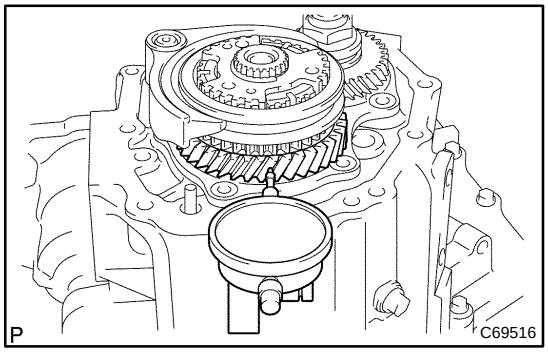

106. INSPECT 5TH GEAR RADIAL CLEARANCE

(a) Using a dial indicator, inspect the 5th gear radial clearance.

Standard clearance:
0.009 to 0.050 mm (0.0004 to 0.0020 in.)

If the clearance is out of the specification, replace 1st gear needle roller bearing.

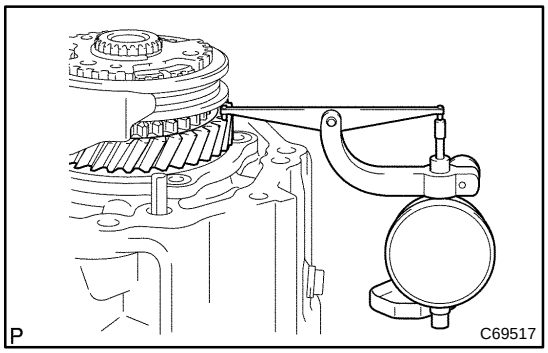

107. INSPECT 5TH GEAR THRUST CLEARANCE

(a) Using a dial indicator, inspect the 5th gear thrust clearance.

Standard clearance:
0.10 to 0.65 mm (0.0039 to 0.0260 in.)

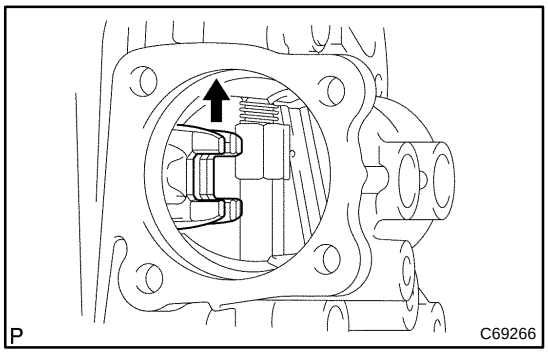

108. INSTALL MANUAL TRANSMISSION OUTPUT SHAFT REAR SET NUT

(a) Engage the gear double meshing.

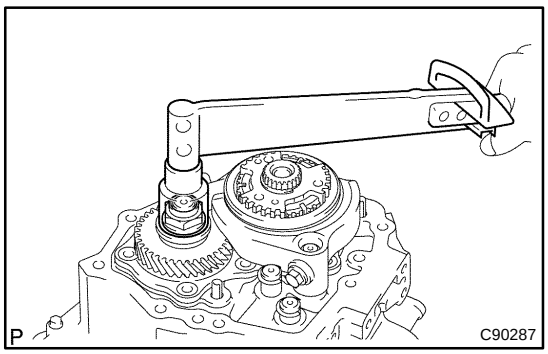

(b) Install the new manual transmission output shaft rear set nut.

Torque: 123 N·m (1,254 kgf·cm, 91 ft·lbf)

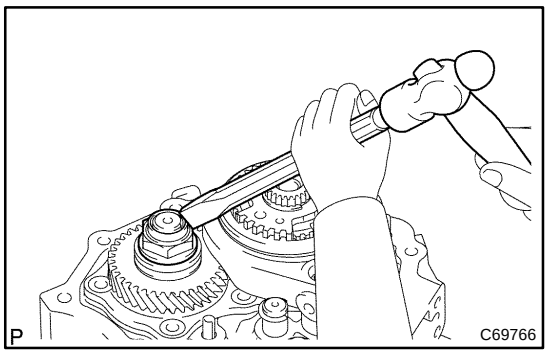

(c) Using a chisel and a hammer, stake the manual transmission output shaft rear set nut.

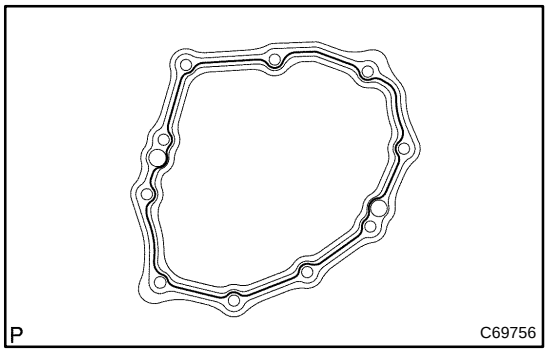

109. INSTALL MANUAL TRANSMISSION CASE COVER SUB−ASSY

(a) Apply FIPG to the transaxle case cover sub−assy, as shown in the installation.

FIPG:

Part No. 08826−00090, THREE BOND 1281

NOTICE:

Install the parts within 10 minutes after applying the packing material (FIPG).

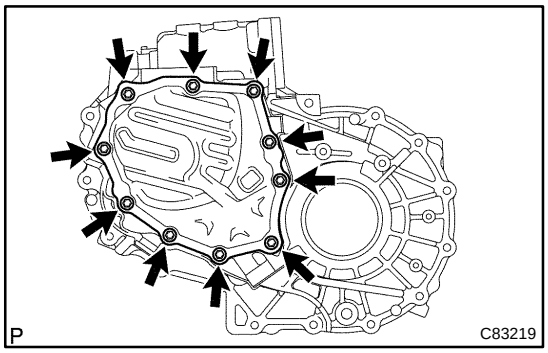

(b) Install the transmission case cover sub−assy with 10 bolts to the manual transaxle case.

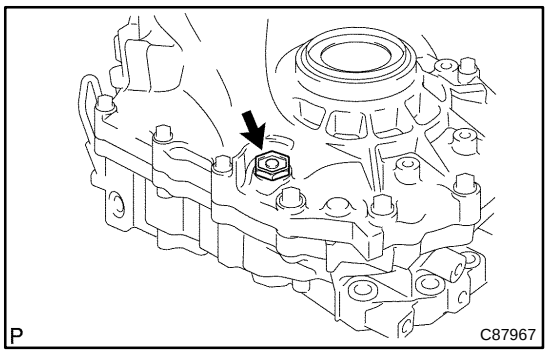

110. INSTALL DRAIN (MTM) PLUG SUB−ASSY

(a) Install the drain plug sub−assy with new gasket to the manual transmission case.

Torque: 49 N·m (500 kgf·cm, 36 ft·lbf)

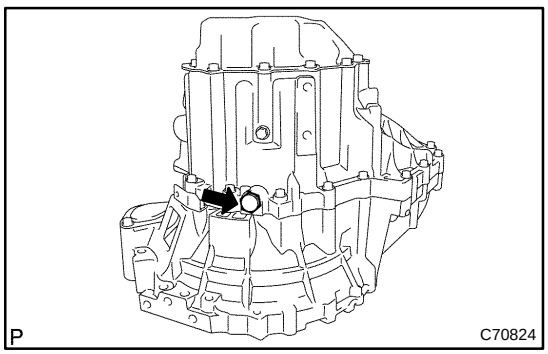

111. INSTALL MANUAL TRANSMISSION FILLER PLUG

(a) Install the manual transmission filler plug with new gasket to the oil seal.

Torque: 49 N·m (500 kgf·cm, 36 ft·lbf)

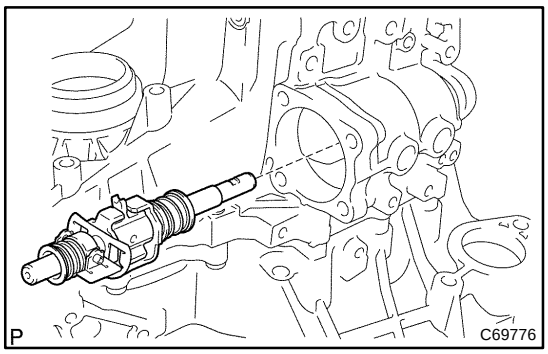

112. INSTALL SHIFT & SELECT LEVER SHAFT ASSY

(a) Coat the shift & select lever shaft assy with gear oil, install it to the manual transmission case.

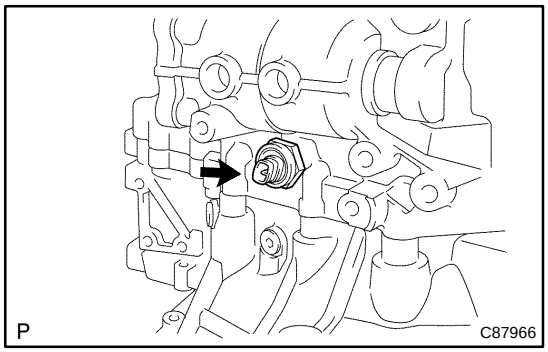

113. INSTALL BACK UP LAMP SWITCH ASSY

(a) Install back up lamp switch assy to the manual transmission case.

Torque: 40 N·m (408 kgf·cm, 30 ft·lbf)

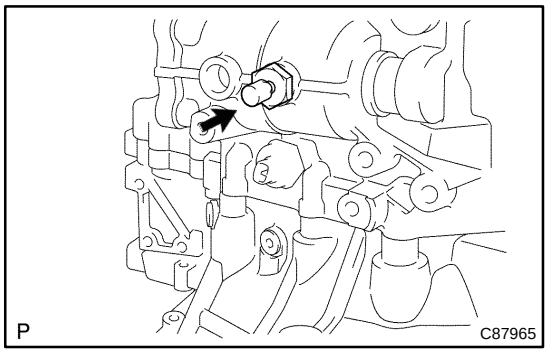

114. INSTALL MANUAL TRANSMISSION BREATHER PLUG

(a) Install the new gasket with manual transmission breather plug to the manual transmission case.

Torque: 49 N·m (500 kgf·cm, 36 ft·lbf)

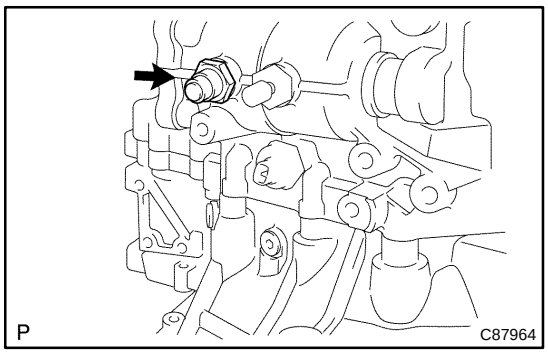

115. INSTALL LOCK BALL ASSY NO.1

(a) Install the lock ball assy No.1 to the manual transmission case.

Torque: 29 N·m (296 kgf·cm, 21 ft·lbf)

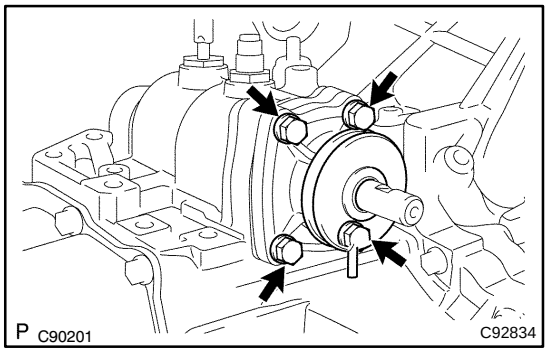

116. INSTALL CONTROL SHAFT COVER

(a) Coat the 4 bolts with sealant, install new gasket with control shaft cover with the bolt.

Sealant:

Part No. 08833−00080, THREE BOND 1344, LOCTITE 242 or equivalent

Torque: 20 N·m (204 kgf·cm, 15 ft·lbf)

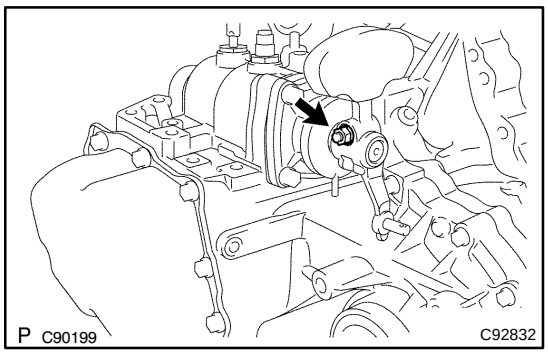

117. INSTALL CONTROL SHIFT LEVER

(a) Install the control shift lever with shift outer lock pin to the shift & select lever shaft.

(b) Install the spring washer with the nut.
Torque: 6.4 N·m (65 kgf·cm, 57 in.·lbf)

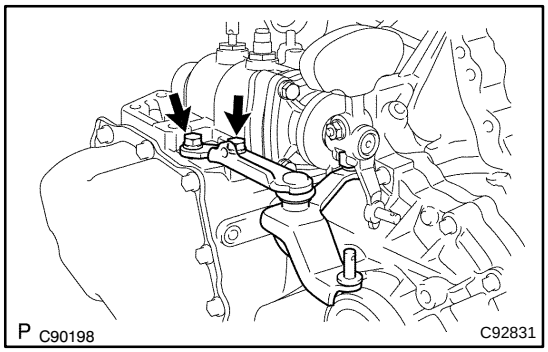

118. INSTALL SELECTING BELL CRANK ASSY

(a) Coat the 2 bolts with sealant, install it with selecting bell crank assy to the manual transmission case.
Sealant:
Part No. 08833−00080, THREE BOND 1344, LOCTITE 242 or equivalent
Torque: 20 N·m (204 kgf·cm, 15 ft·lbf)

119. INSTALL SPEEDOMETER DRIVEN HOLE COVER SUB−ASSY

(a) Install the bolt and speedometer driven hole cover sub−assy to the transmission case.

120. INSTALL CLUTCH RELEASE FORK BOOT

(a) Install the clutch release fork bolt to the manual transaxle case.

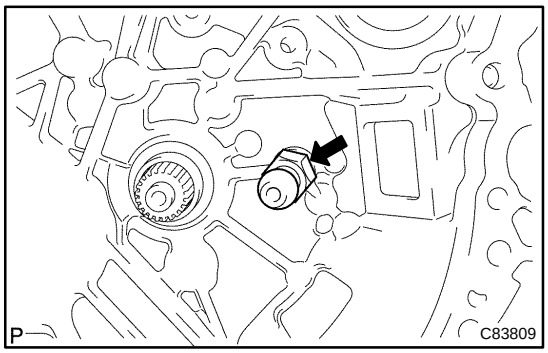

121. INSTALL RELEASE FORK SUPPORT

(a) Using a deep socket wrench, install the release fork support to the manual transaxle case.
Torque: 47 N·m (480 kgf·cm, 35 ft·lbf)

122. INSTALL CLUTCH RELEASE BEARING ASSY

(a) Coat the clutch release bearing assy with release hub grease, install it to the clutch release fork sub−assy.
Sealant:
Part No. 08887−01806, RELEASE HUB GREASE or equivalent

(b) Apply clutch spline grease to the input shaft spline.

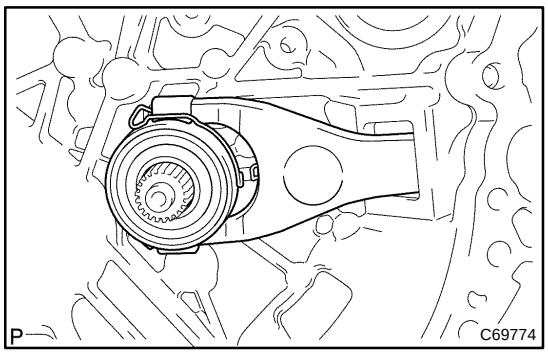

123. INSTALL CLUTCH RELEASE FORK SUB−ASSY

(a) Install the clutch release fork sub − assy to the input shaft.

INPUT SHAFT ASSY (E351)

OVERHAUL

4104Z−03

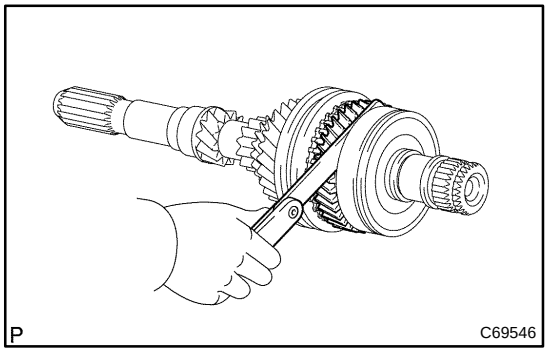

1. INSPECT 4TH GEAR THRUST CLEARANCE

(a) Using a feeler gauge, measure the 4th gear thrust clearance.

Standard clearance:
0.10 to 0.57 mm (0.0039 to 0.0224 in.)

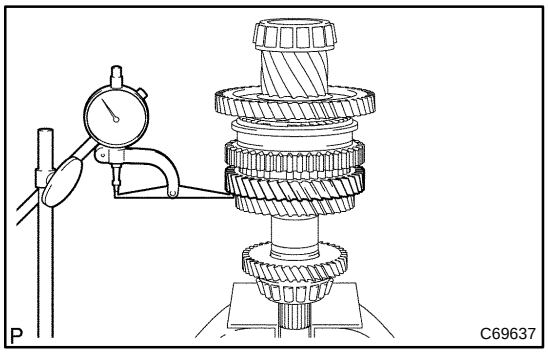

2. INSPECT 3RD GEAR THRUST CLEARANCE

(a) Using a dial indicator, measure the 3rd gear thrust clearance.

Standard clearance:
0.10 to 0.35 mm (0.0039 to 0.0138 in.)

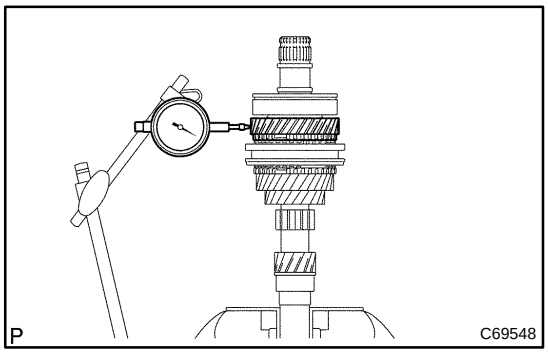

3. INSPECT 4TH GEAR RADIAL CLEARANCE

(a) Using a dial indicator, measure the 4th gear radial clearance.

Standard clearance: mm (in.)

Bearing	Standard clearance
KOYO made	0.009 to 0.053 (0.0004 to 0.0021)
NSK made	0.009 to 0.051 (0.0004 to 0.0020)

If the clearance exceeds the maximum, replace the 4th gear needle roller bearing.

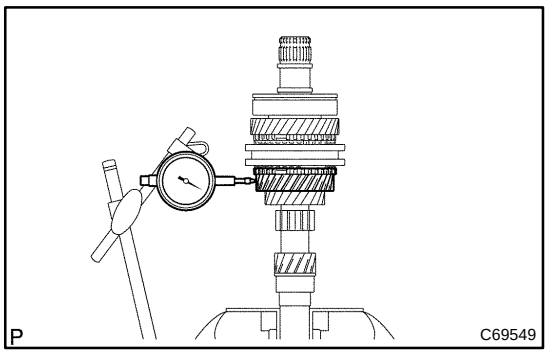

4. INSPECT 3RD GEAR RADIAL CLEARANCE

(a) Using a dial indicator, measure the 3rd gear radial clearance.

Standard clearance: mm (in.)

Bearing	Standard clearance
KOYO made	0.009 to 0.053 (0.0004 to 0.0021)
NSK made	0.009 to 0.051 (0.0004 to 0.0020)

If the clearance exceeds the maximum, replace the 3rd gear needle roller bearing.

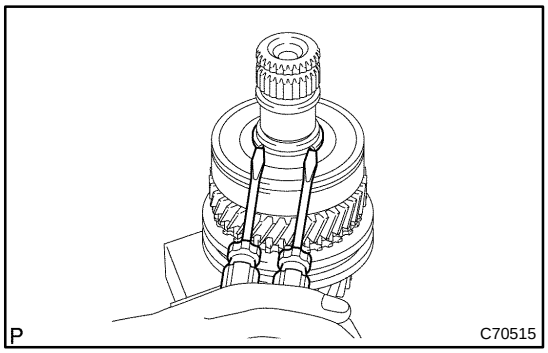

5. REMOVE 4TH GEAR

(a) Hold the input shaft assy and soft jaws with a vise.

(b) Using a 2 screwdrivers and a hammer, remove the input shaft rear bearing shaft snap ring from the input shaft.

NOTICE:

Using a waste to prevent the snap ring from being scattered.

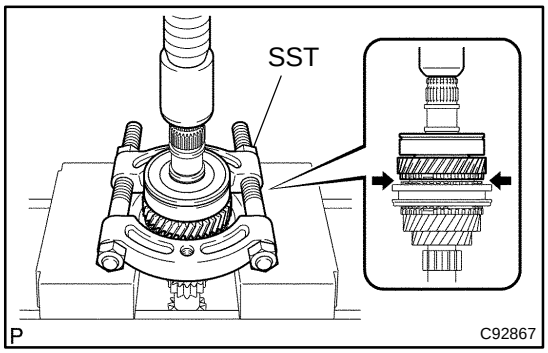

(c) Using SST and a press, remove the input shaft rear bearing and 4th gear.

SST 09950−00020

NOTICE:

Do not tighten SST excessively.

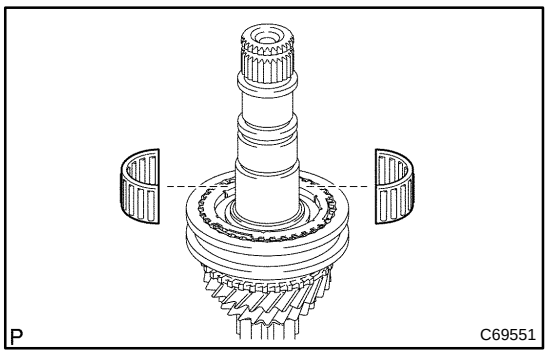

6. REMOVE 4TH GEAR NEEDLE ROLLER BEARING

(a) Remove the 4th gear needle roller bearing from the input shaft.

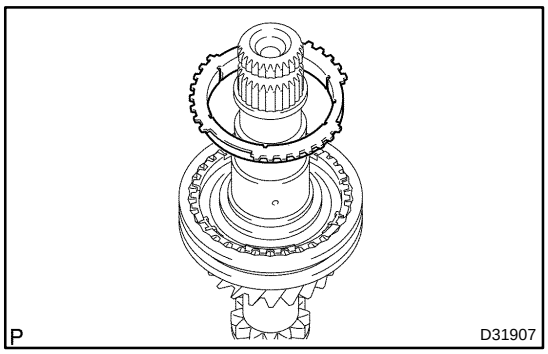

7. REMOVE 2ND SYNCHRONIZER OUTER RING

(a) Remove the 2nd synchronizer outer ring from the transmission clutch hub No.2.

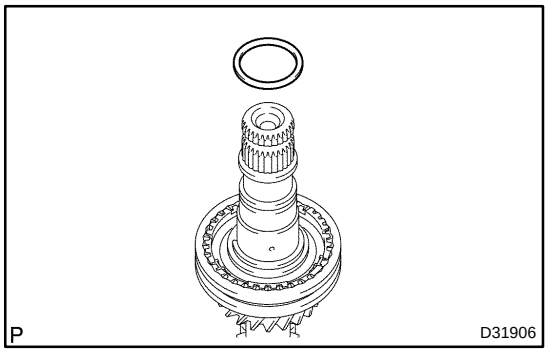

8. REMOVE 4TH GEAR BEARING SPACER

(a) Remove the 4th gear bearing spacer from the transmission clutch hub No.2.

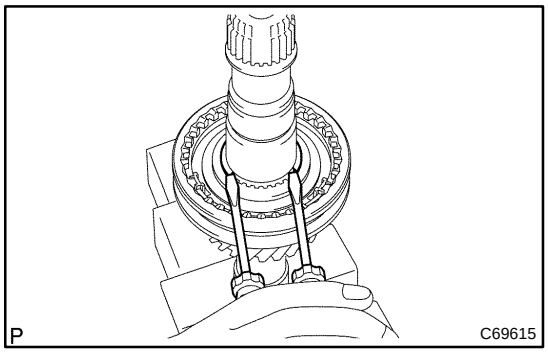

9. REMOVE 3RD GEAR

(a) Using 2 screwdrivers and a hammer, remove the clutch hub No.2 setting shaft snap ring from the input shaft.

NOTICE:

Using a waste to prevent the snap ring from being scattered.

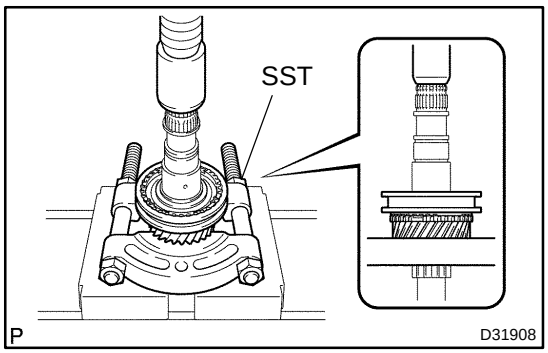

(b) Using SST and a press, remove the transmission clutch hub No.2 and 3rd gear from the input shaft.

SST 09950−00020

NOTICE:

Do not tighten SST excessively.

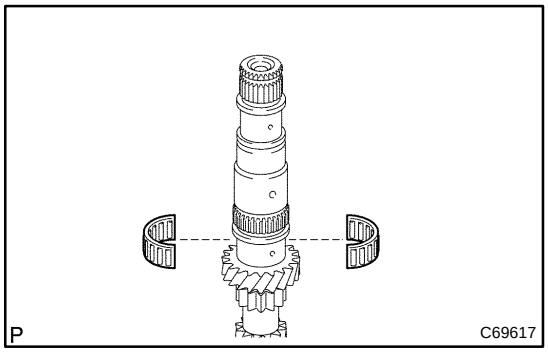

10. REMOVE 3RD GEAR NEEDLE ROLLER BEARING

(a) Remove the 3rd gear needle roller bearing from the input shaft.

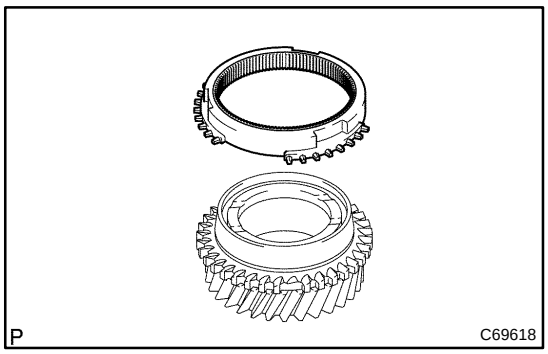

11. REMOVE SYNCHRONIZER RING NO.3

(a) Remove the synchronizer ring No.3 from the 3rd gear.

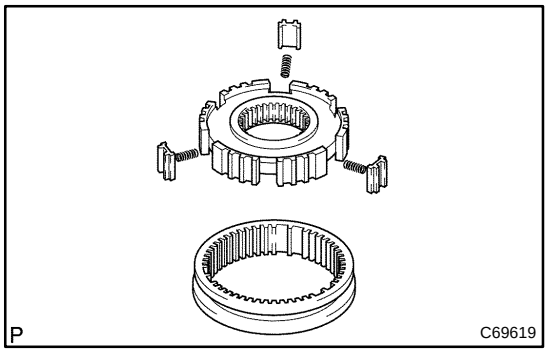

12. REMOVE TRANSMISSION HUB SLEEVE NO.2

(a) Remove the transmission hub sleeve No.2, 3 synchromesh shifting keys and 3 synchromesh shifting key springs from the transmission clutch hub No.2.

NOTICE:

Using a waste to prevent the shifting key and shifting key spring from being scattered.

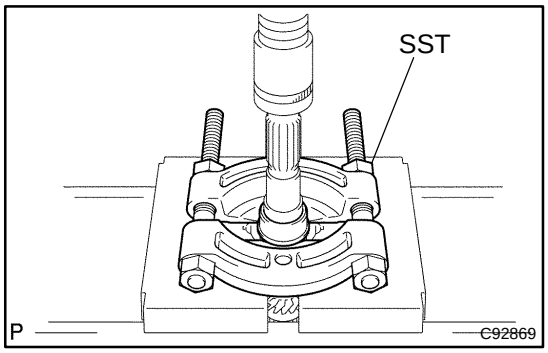

13. REMOVE INPUT SHAFT FRONT BEARING

(a) Using SST and a press, remove the input shaft bearing front (inner race) from the input shaft.

SST 09950−00020

NOTICE:

Do not tighten SST excessively.

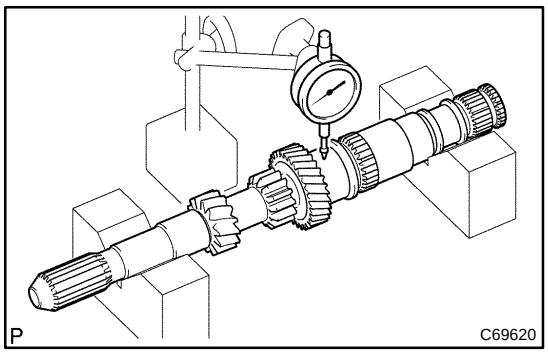

14. INSPECT INPUT SHAFT

(a) Using V−block and dial indicator, measure the shaft run out.

Maximum run out: 0.03 mm (0.0012 in.)

If the run out exceeds the maximum, replace the input shaft.

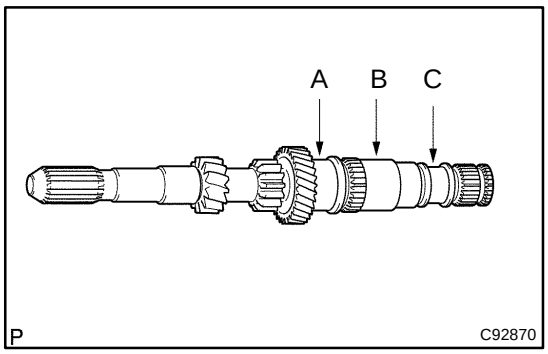

(b) Using a micrometer, measure the outer diameter of the input shaft journal surface.

Outer diameter: mm (in.)

	Standard outer diameter	Minimum outer diameter
A	35.984 to 36.000 (1.4167 to 1.4173)	35.984 (1.4167)
B	35.984 to 36.000 (1.4167 to 1.4173)	35.984 (1.4167)
C	27.957 to 27.972 (1.1007 to 1.1013)	27.957 (1.1007)

If the outer diameter is less than the minimum, replace the input shaft.

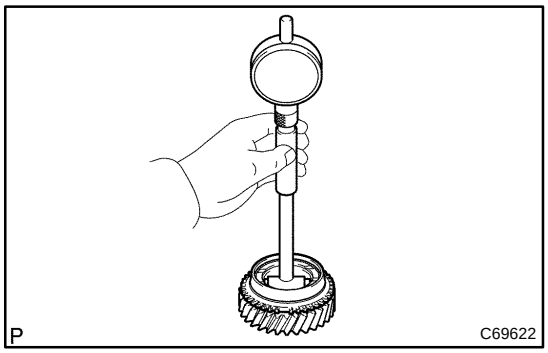

15. INSPECT 4TH GEAR

(a) Using a cylinder gauge, measure the inside diameter of the 4th gear.

Inside diameter: mm (in.)

Standard inside diameter	Maximum inside diameter
42.009 to 42.025 (1.6539 to 1.6545)	42.025 (1.6545)

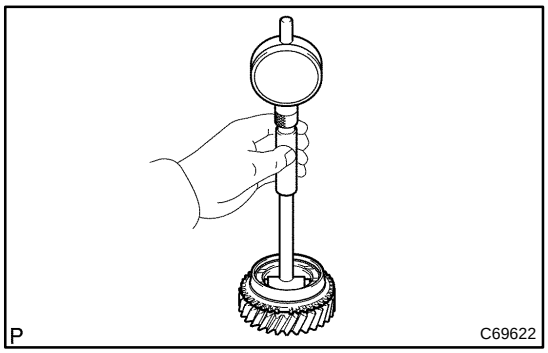

16. INSPECT 3RD GEAR

(a) Using a cylinder gauge, measure the inside diameter of the 3rd gear.

Inside diameter: mm (in.)

Standard inside diameter	Maximum inside diameter
43.009 to 43.025 (1.6933 to 1.6939)	43.025 (1.6939)

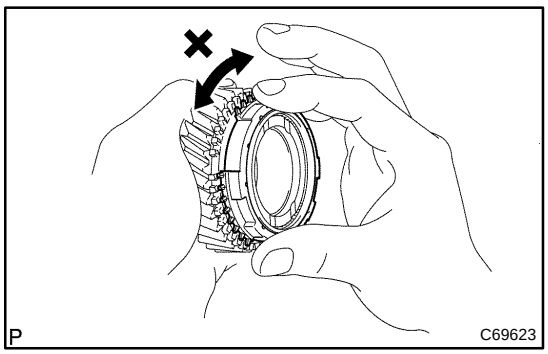

17. INSPECT 2ND SYNCHRONIZER OUTER RING

(a) Coat the 4th gear cone with gear oil. Turn the synchronizer ring No.3 in one direction while pushing it to the 4th gear cone. Check that the ring locks.

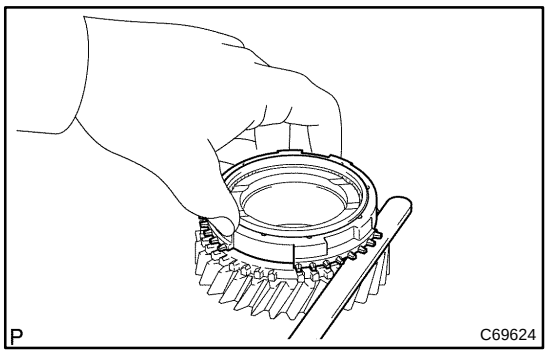

(b) Using a feeler gauge, measure the clearance between the synchronizer outer ring back and 4th gear spline end.
Standard clearance:
0.75 to 1.65 mm (0.0295 to 0.0650 in.)

If the standard clearance is out of specification, replace the synchronizer ring.

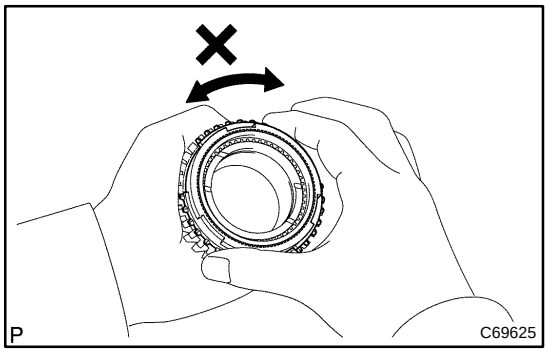

18. INSPECT SYNCHRONIZER RING NO.3

(a) Coat the 3rd gear cone with gear oil. Turn the synchronizer outer ring in one direction while pushing it to the 3rd gear cone. Check that the ring locks.

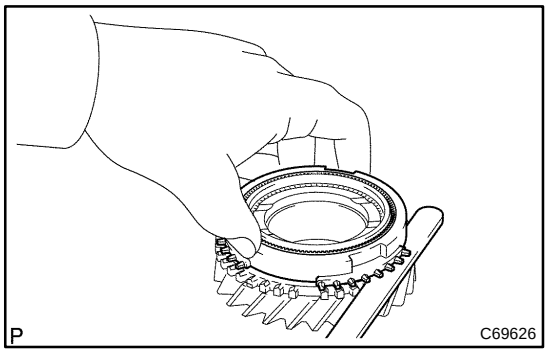

(b) Using a feeler gauge, measure the clearance between the synchronizer ring No.3 back and 3rd gear spline end.
Standard clearance:
0.65 to 1.75 mm (0.0256 to 0.0689 in.)

If the standard clearance is out of specification, replace the synchronizer ring No.3.

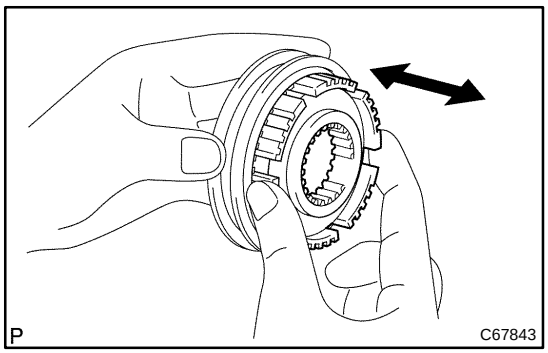

19. INSPECT TRANSMISSION HUB SLEEVE NO.2

(a) Inspect the sliding condition between transmission hub sleeve No.2 and transmission clutch hub No.2.

(b) Inspect tip of spline gear on the transmission hub sleeve No.2 for wear.

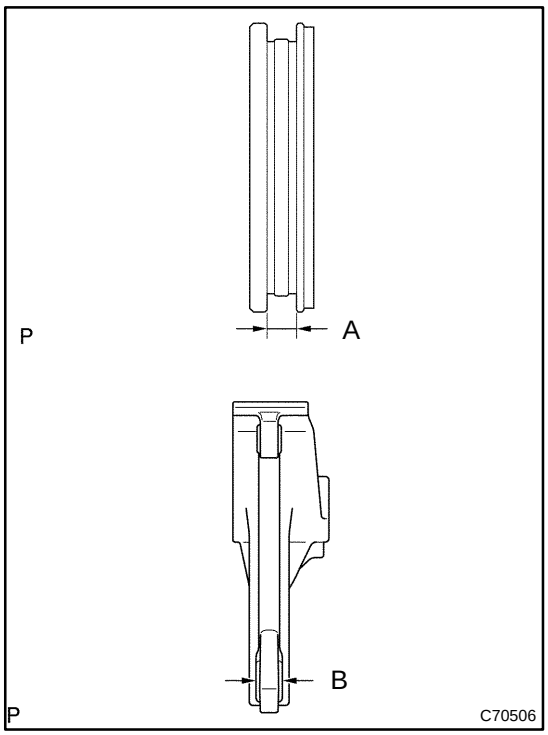

(c) Using a vernier calipers, measure the transmission hub sleeve No.3 groove and the thickness of the claw part on gear shift fork No.1, and calculate the clearance.

Standard clearance:

0.11 to 0.69 mm (0.0043 to 0.0272 in.) {A − B}

If the clearance is out of the specification, replace the transmission hub sleeve No.2 and gear shift fork No.2 with the new one.

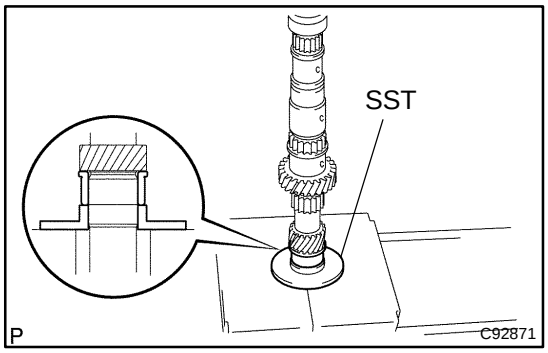

20. INSTALL INPUT SHAFT FRONT BEARING

(a) Using SST and a press, install the input shaft front bearing (inner race).

SST 09608−00071

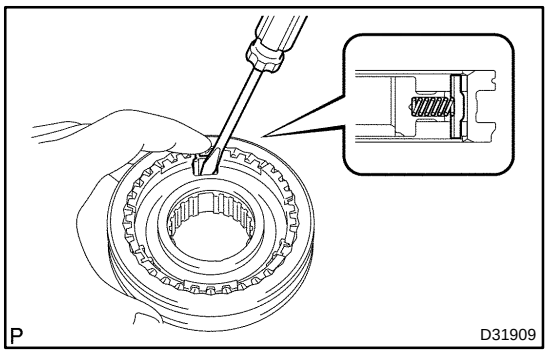

21. INSTALL TRANSMISSION HUB SLEEVE NO.2

(a) Coat the transmission hub sleeve No.2 with gear oil.

(b) Install the 3 synchromesh key springs with transmission hub sleeve No.2.

NOTICE:

Do not install the transmission clutch hub sleeve No.2 and the transmission clutch hub No.2 incorrect orientation.

(c) Using a screwdriver, install the synchromesh shifting key to the input shaft.

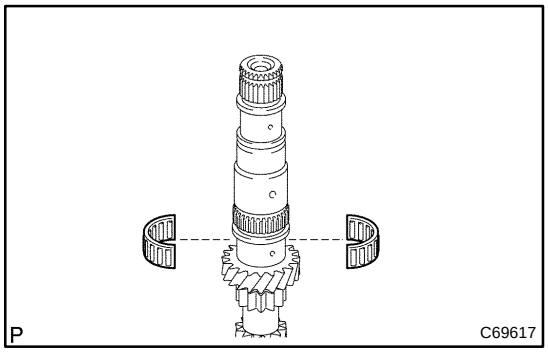

22. INSTALL 3RD GEAR NEEDLE ROLLER BEARING

(a) Coat the 3rd gear bearing with gear oil, install it to the input shaft.

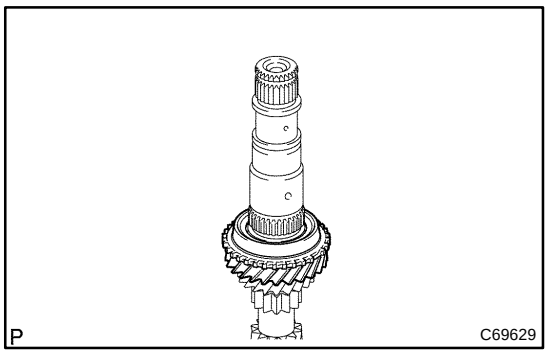

23. INSTALL 3RD GEAR

(a) Coat the 3rd gear with gear oil, install it to the input shaft.

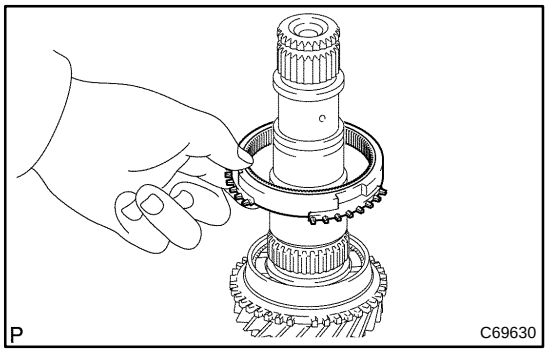

24. INSTALL SYNCHRONIZER RING NO.3

(a) Coat the synchronizer ring No.3 with gear oil, install it to the 3rd gear.

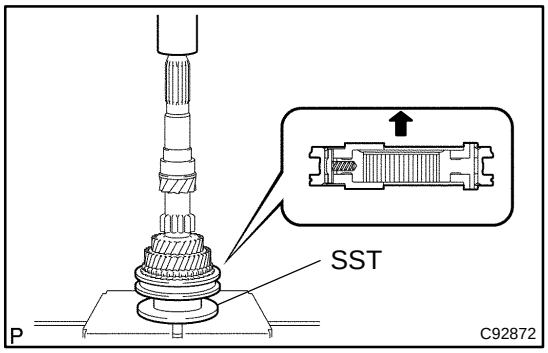

25. INSTALL TRANSMISSION CLUTCH HUB NO.2

(a) Using SST and a press, install the transmission clutch hub No.2 to the input shaft.

SST 09316−60011 (09316−00041)

NOTICE:

- **Align the claw of clutch hub No.2 with notch of synchronizer ring No.3 and install them.**
- **Make sure that the 3rd gear should rotate.**

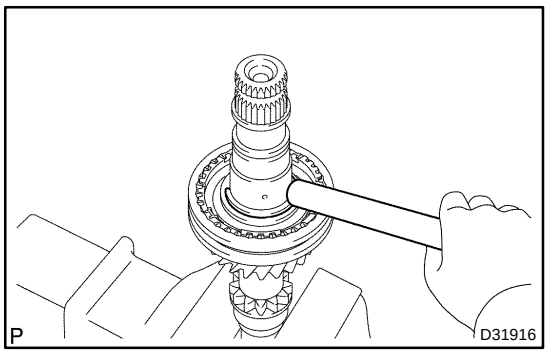

(b) Select a snap ring so that clearance between the transmission clutch hub No.2 and the clutch hub No.2 shaft snap ring will be the standard clearance. Using a brass bar and a hammer, install the snap ring.

Standard clearance: 0.1 mm or less (0.0039 or less)

Snap ring thickness

Part No.	Thickness: mm (in.)	Mark
90520−34003	2.30 to 2.35 (0.0906 to 0.0925)	H
90520−34004	2.35 to 2.40 (0.0925 to 0.0945)	J
90520−34005	2.40 to 2.45 (0.0945 to 0.0965)	K
90520−34006	2.45 to 2.50 (0.0965 to 0.0984)	L
90520−34007	2.50 to 2.55 (0.0984 to 0.1004)	M
90520−34008	2.55 to 2.60 (0.1004 to 0.1024)	N
90520−34009	2.60 to 2.65 (0.1024 to 0.1043)	P

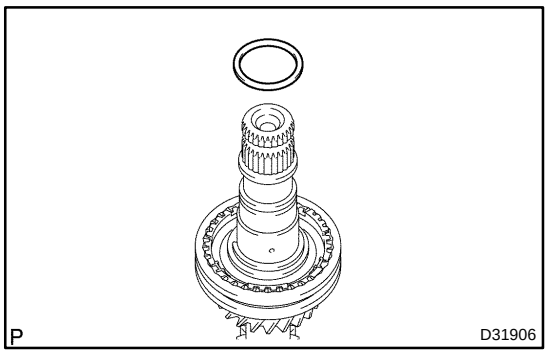

26. INSTALL 4TH GEAR BEARING SPACER

(a) Coat the 4th gear bearing spacer with gear oil, install it to the input shaft.

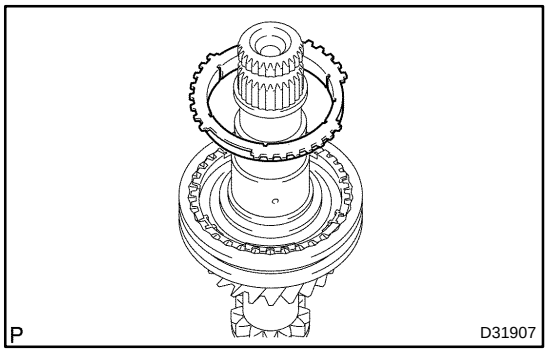

27. INSTALL 2ND SYNCHRONIZER OUTER RING

(a) Coat the 2nd synchronizer outer ring with gear oil, install it to the transmission clutch hub No.2.

NOTICE:

Align the claw of the clutch hub No.2 with the notch of the 2nd synchronizer outer ring and assemble.

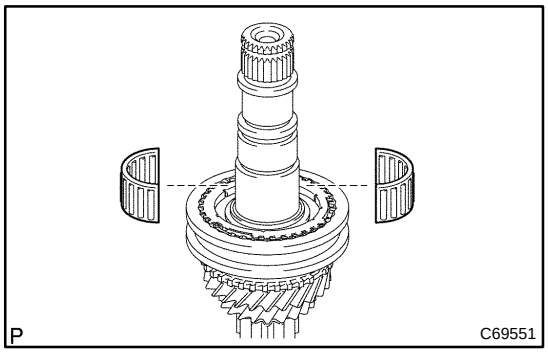

28. INSTALL 4TH GEAR NEEDLE ROLLER BEARING

(a) Coat the 4th gear needle roller bearing with gear oil, install it to the input shaft.

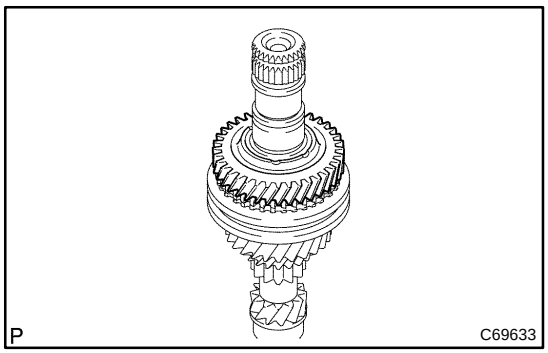

29. INSTALL 4TH GEAR

(a) Coat the 4th gear with gear oil, install it to the input shaft.

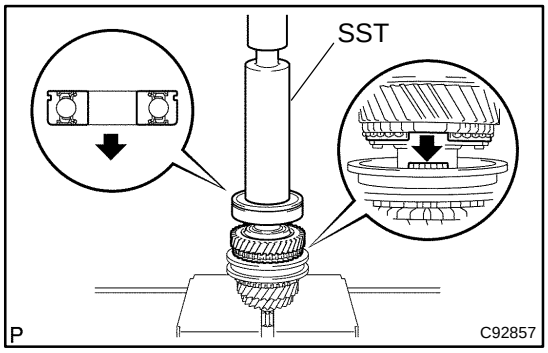

30. INSTALL INPUT SHAFT REAR RADIAL BALL BEARING

(a) Using SST and a press, install the input shaft rear radial ball bearing to the input shaft.

NOTICE:

- **Make the groove on the bearing face to the rear and install.**
- **Make sure that the 3rd gear rotates.**

SST 09608−06041

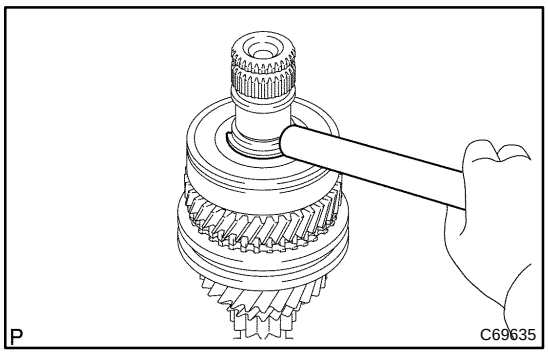

(b) Select a snap ring so that the clearance between the Input shaft radial ball rear bearing and the input shaft rear bearing snap ring will be the standard clearance. Using a brass bar and a hammer, install the snap ring.

Standard clearance: 0.1 mm or less

Snap ring

Part No.	thickness: mm (in.)	Mark
90520−30008	2.35 to 2.40 (0.0925 to 0.0945)	1
90520−30009	2.40 to 2.45 (0.0945 to 0.0965)	2
90520−30010	2.45 to 2.50 (0.0965 to 0.0984)	3
90520−30011	2.50 to 2.55 (0.0984 to 0.1004)	4
90520−30012	2.55 to 2.60 (0.1004 to 0.1024)	5
90520−30013	2.60 to 2.65 (0.1024 to 0.1043)	6
90520−30021	2.65 to 2.70 (0.1043 to 0.1063)	7
90520−30022	2.70 to 2.75 (0.1063 to 0.1083)	8

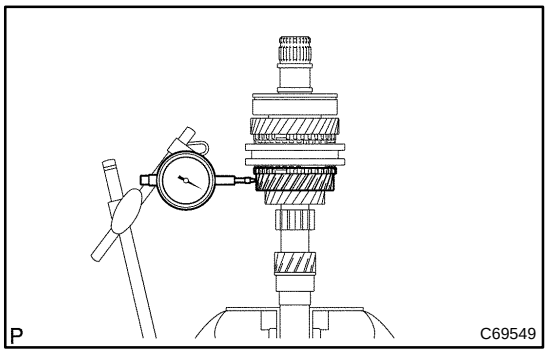

31. INSPECT 3RD GEAR RADIAL CLEARANCE

(a) Using a dial indicator, measure the 3rd gear radial clearance.

Standard clearance: mm (in.)

Bearing	Standard clearance
KOYO made	0.009 to 0.053 (0.0004 to 0.0021)
NSK made	0.009 to 0.051 (0.0004 to 0.0020)

If the clearance exceeds the maximum, replace the 3rd gear needle roller bearing.

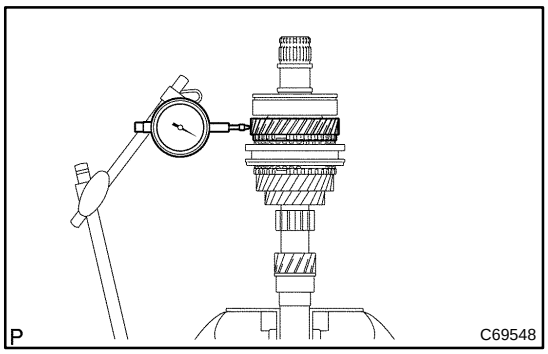

32. INSPECT 4TH GEAR RADIAL CLEARANCE

(a) Using a dial indicator, measure the 4th gear radial clearance.

Standard clearance: mm (in.)

Bearing	Standard clearance
KOYO made	0.009 to 0.053 (0.0004 to 0.0021)
NSK made	0.009 to 0.051 (0.0004 to 0.0020)

If the clearance exceeds the maximum, replace the 4th gear needle roller bearing.

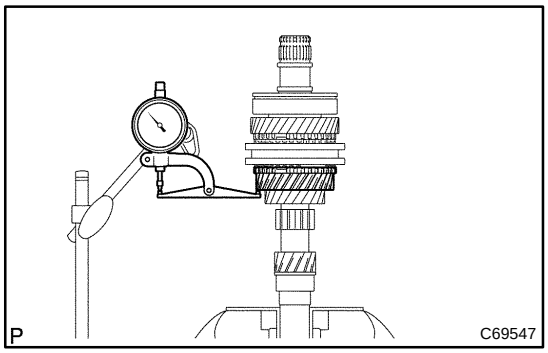

33. INSPECT 3RD GEAR THRUST CLEARANCE

(a) Using a dial indicator, measure the 3rd gear thrust clearance.

Standard clearance:
0.10 to 0.35 mm (0.0039 to 0.0138 in.)

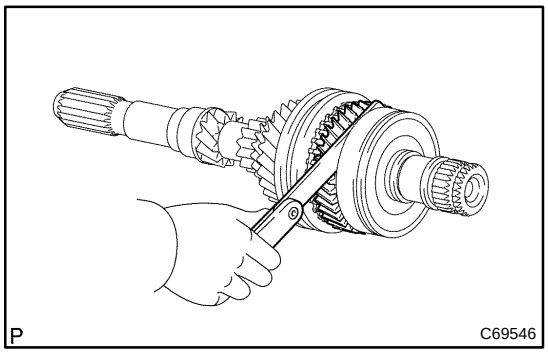

34. INSPECT 4TH GEAR THRUST CLEARANCE

(a) Using a feeler gauge, measure the 4th gear thrust clearance.

Standard clearance:
0.10 to 0.57 mm (0.0039 to 0.0224 in.)

OUTPUT SHAFT ASSY (E351)

OVERHAUL

41050−06

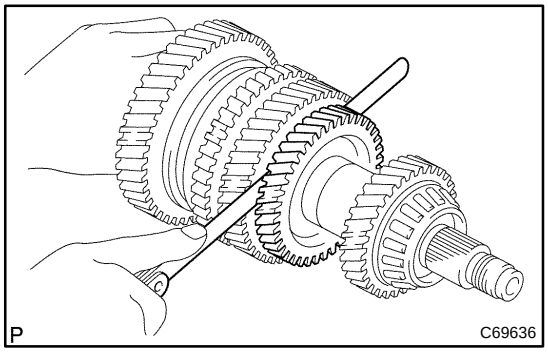

1. INSPECT 1ST GEAR THRUST CLEARANCE

(a) Using a feeler gauge, measure the 1st gear thrust clearance.

Standard clearance:
0.25 to 0.40 mm (0.0098 to 0.0157 in.)

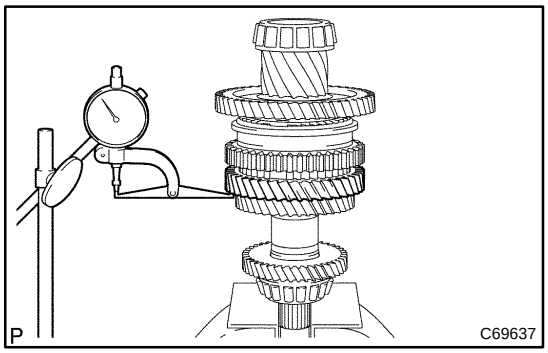

2. INSPECT 2ND GEAR THRUST CLEARANCE

(a) Using a dial indicator, measure the 2nd gear thrust clearance.

Standard clearance:
0.10 to 0.35 mm (0.0039 to 0.0138 in.)

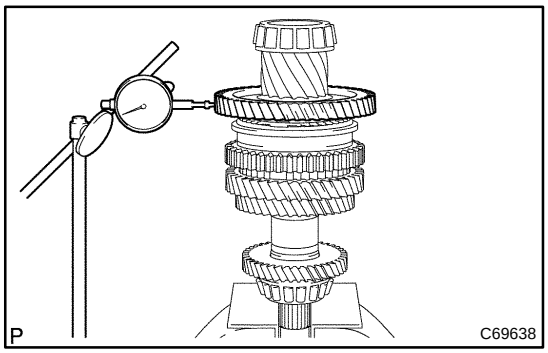

3. INSPECT 1ST GEAR RADIAL CLEARANCE

(a) Using a dial indicator, measure the 1st gear radial clearance.

Standard clearance: mm (in.)

Bearing	Standard clearance
KOYO made	0.009 to 0.053 (0.0004 to 0.0021)
NSK made	0.009 to 0.051 (0.0004 to 0.0020)

If the clearance is out of the specification, replace the 1st gear needle roller bearing.

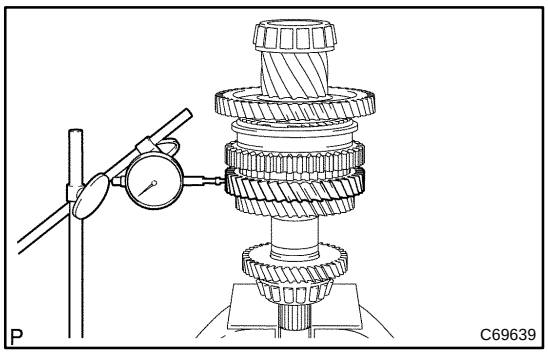

4. INSPECT 2ND GEAR RADIAL CLEARANCE

(a) Using a dial indicator, measure the 2nd gear radial clearance.

Standard clearance: mm (in.)

Bearing	Standard clearance
KOYO made	0.009 to 0.053 (0.0004 to 0.0021)
NSK made	0.009 to 0.051 (0.0004 to 0.0020)

If the clearance is out of the specification, replace the 2nd gear needle roller bearing.

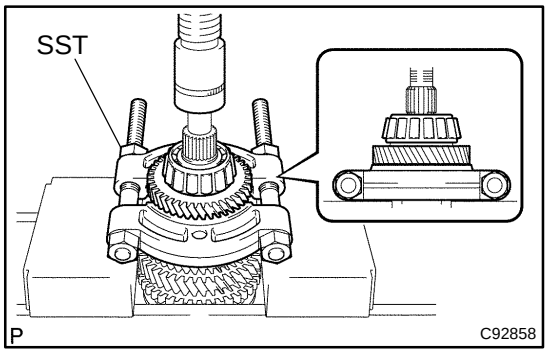

5. REMOVE 4TH DRIVEN GEAR

(a) Using SST and a press, remove the output shaft bearing rear (inner race) and 4th driven gear.

SST 09950−00020

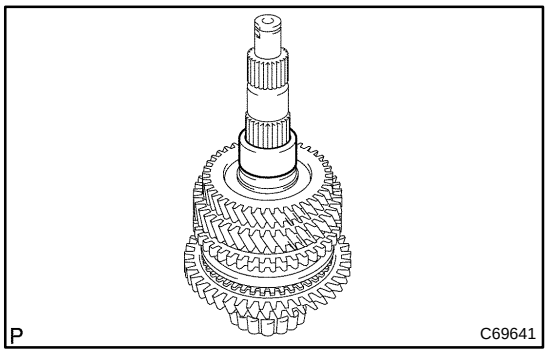

6. REMOVE OUTPUT GEAR SPACER

(a) Remove the output gear spacer from the output shaft.

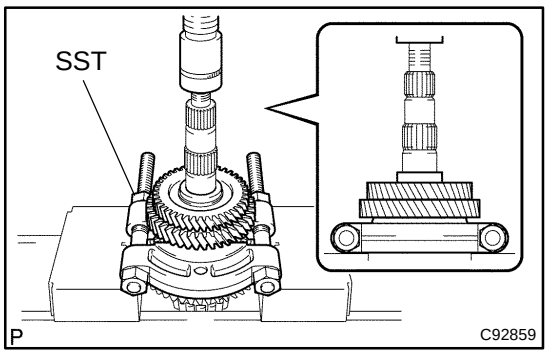

7. REMOVE 2ND GEAR

(a) Using SST and a press, remove the 3rd driven gear and 2nd gear from the out put shaft.

SST 09950−00020

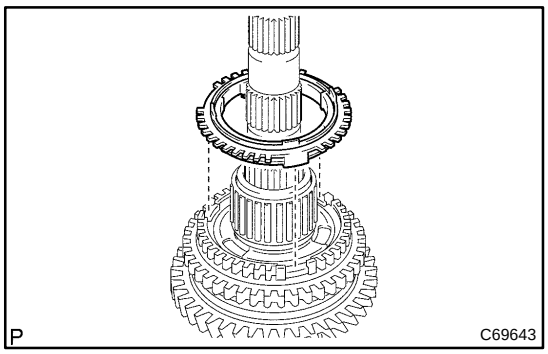

8. REMOVE SYNCHRONIZER RING SET NO.2

(a) Remove the synchronizer ring set No.2 from the transmission clutch hub No.1.

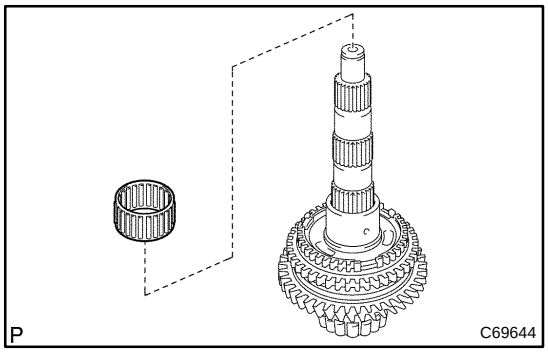

9. REMOVE 2ND GEAR NEEDLE ROLLER BEARING

(a) Remove the 2nd gear needle roller bearing from the output shaft.

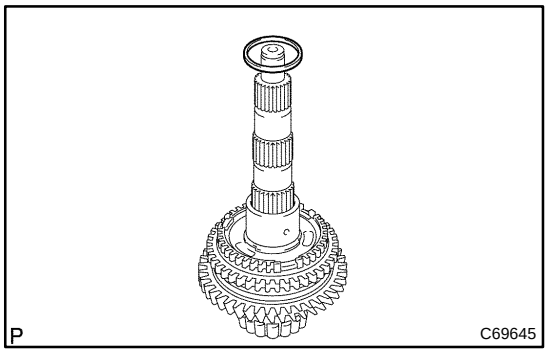

10. REMOVE 2ND GEAR BEARING SPACER

(a) Remove the 2nd gear bearing spacer from the output shaft.

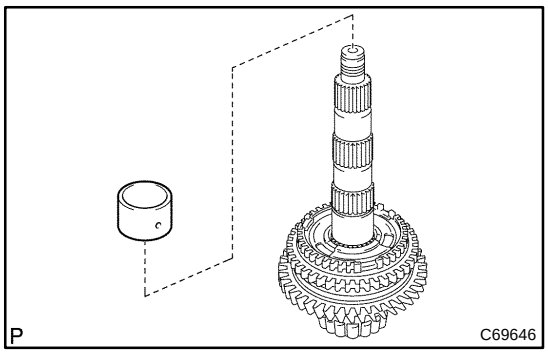

11. REMOVE 2ND GEAR BUSH

(a) Remove the 2nd gear bush from the output shaft.

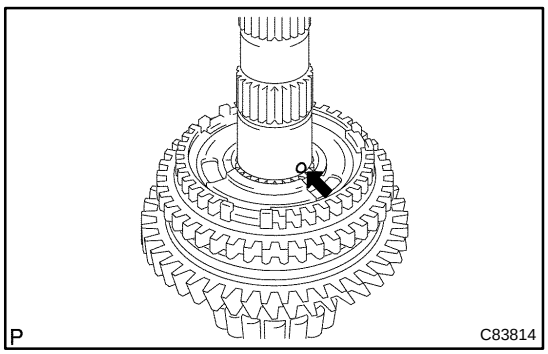

12. REMOVE 2ND GEAR BUSH BALL

(a) Using a magnetic finger, remove the 2nd gear bush ball from the output shaft.

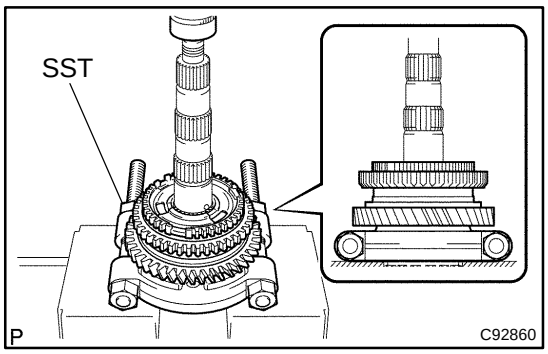

13. REMOVE 1ST GEAR

(a) Using SST and a press, remove the transmission clutch hub No.1 and 1st gear from the output shaft.
SST 09950−00020

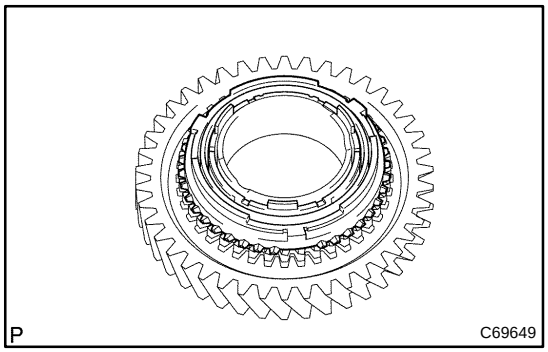

14. REMOVE SYNCHRONIZER RING SET NO.1

(a) Remove the synchronizer ring set No.1 from the 1st gear.

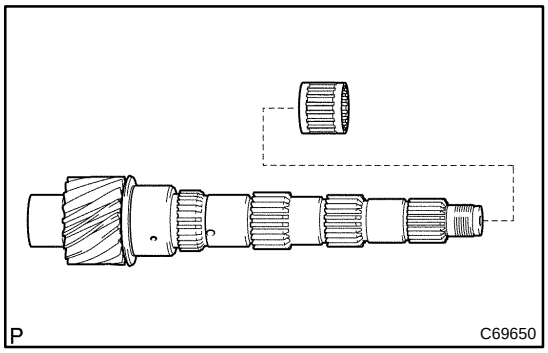

15. REMOVE 1ST GEAR NEEDLE ROLLER BEARING

(a) Remove the 1st gear needle roller bearing from the output shaft.

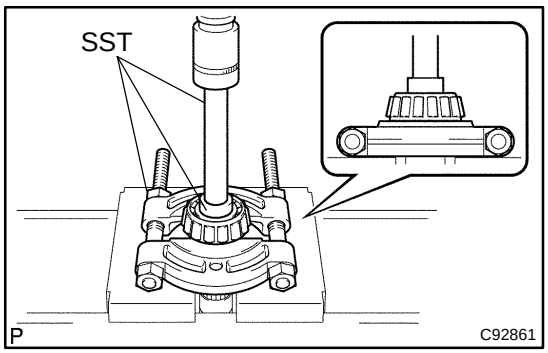

16. REMOVE OUTPUT SHAFT FRONT BEARING

(a) Using SST and a press, remove the output shaft front bearing (inner race) from the output shaft.
SST 09950−00020, 09950−60010 (09951−00320), 09950−70010 (09951−07150)

NOTICE:
Do not tighten SST excessively.

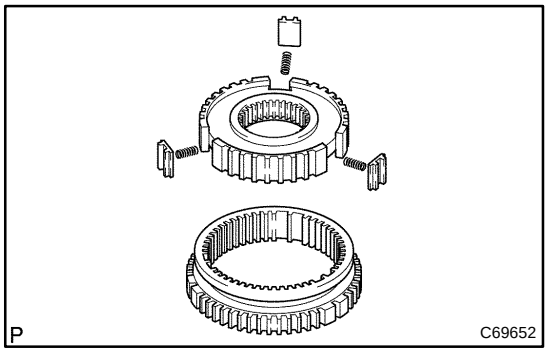

17. REMOVE REVERSE GEAR

(a) Remove the reverse gear, 3 synchromesh shifting keys and 3 synchromesh shifting key springs from the transmission clutch hub No.1.

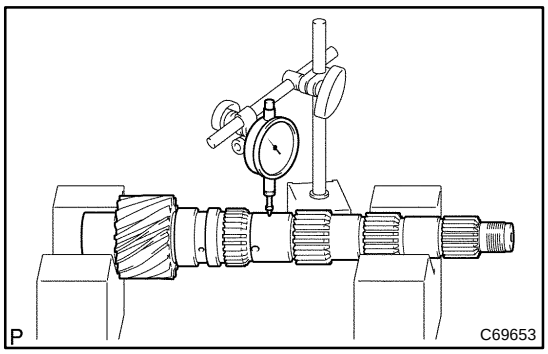

18. INSPECT OUTPUT SHAFT

(a) Using V−block and a dial indicator, measure the shaft run out.

Maximum run out: 0.03 mm (0.0012 in.)

If the run out exceeds the maximum, replace the input shaft.

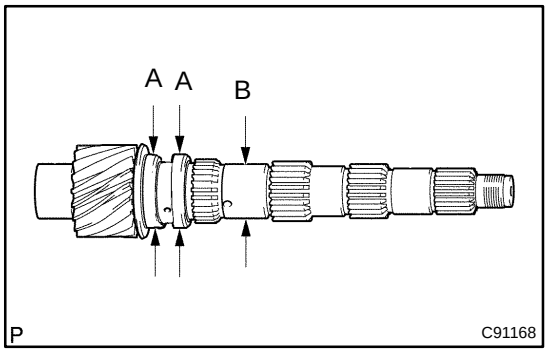

(b) Using a micrometer, measure the outer diameter of the output shaft journal surface.

Outer diameter: mm (in.)

Part	Standard outer diameter	minimum outer diameter
A	37.610 to 37.626 (1.4807 to 1.4813)	37.610 (1.4807)
B	34.502 to 34.512 (1.3583 to 1.3587)	34.502 (1.3583)

If the outer diameter is less than the minimum, replace the input shaft.

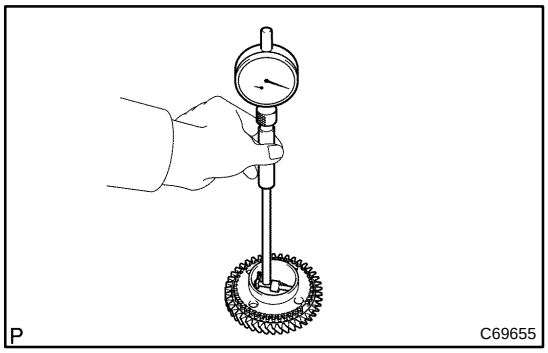

19. INSPECT 2ND GEAR

(a) Using a cylinder gauge, measure the inside diameter of the 2nd gear.

Inside diameter: mm (in.)

Standard inside diameter	Maximum inside diameter
50.009 to 50.025 (1.9689 to 1.9695)	50.025 (1.9695)

If the inside diameter exceeds the maximum, replace the 2nd gear.

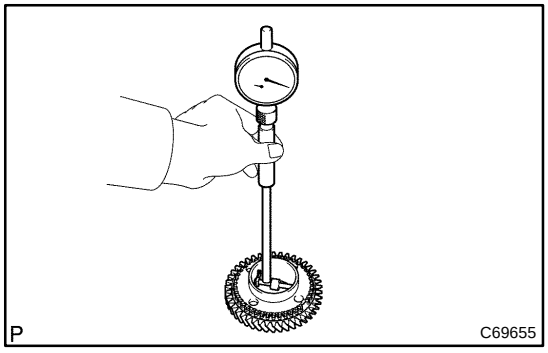

20. INSPECT 1ST GEAR

(a) Using a cylinder gauge, measure the inside diameter of the 1st gear.

Inside diameter: mm (in.)

Standard inside diameter	Maximum inside diameter
51.009 to 51.025 (2.0082 to 2.0089)	51.025 (2.0089)

If the inside diameter exceeds the maximum, replace the 1st gear.

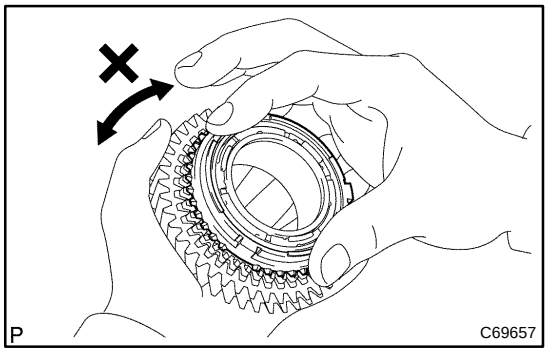

21. INSPECT SYNCHRONIZER RING SET NO.2

(a) Coat the cone of the 2nd gear with gear oil, check that it does not turn in the both circumference directions while pushing it to the synchronizer ring No.2.

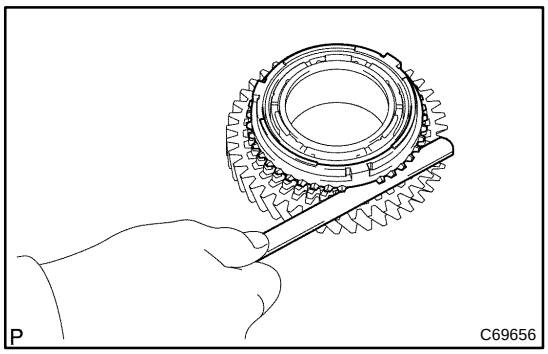

(b) Check the clearance between the synchronizer ring No.2 and 2nd gear while pushing it to the synchronizer ring No.2.

Standard clearance:

0.70 to 1.45 mm (0.0276 to 0.0571 in.)

If the standard clearance is out of the specification, replace the synchronizer ring set No.2 with a new one.

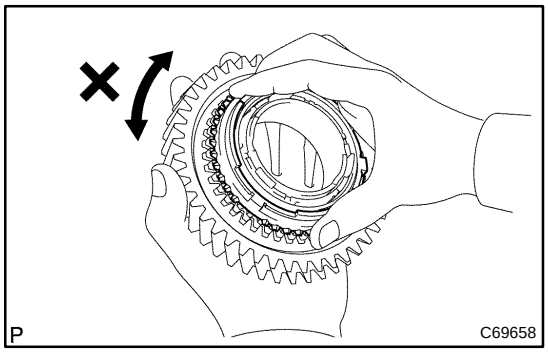

22. INSPECT SYNCHRONIZER RING SET NO.1

(a) Coat the 1st gear cone with gear oil. Turn the synchronizer ring set No.1. in one direction while pushing it to the 1st gear cone. Check that the ring locks.

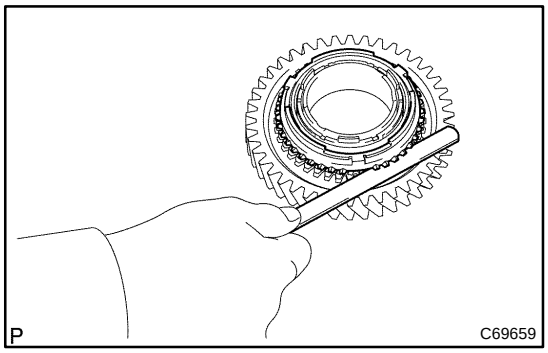

(b) Check the clearance between the synchronizer ring set No.1 and 1st gear while pushing it to the cone of synchronizer ring set No.1.

Standard clearance:

0.70 to 1.45 mm (0.0276 to 0.0571 in.)

If the standard clearance is out of the specification, replace the synchronizer ring set No.1 with a new one.

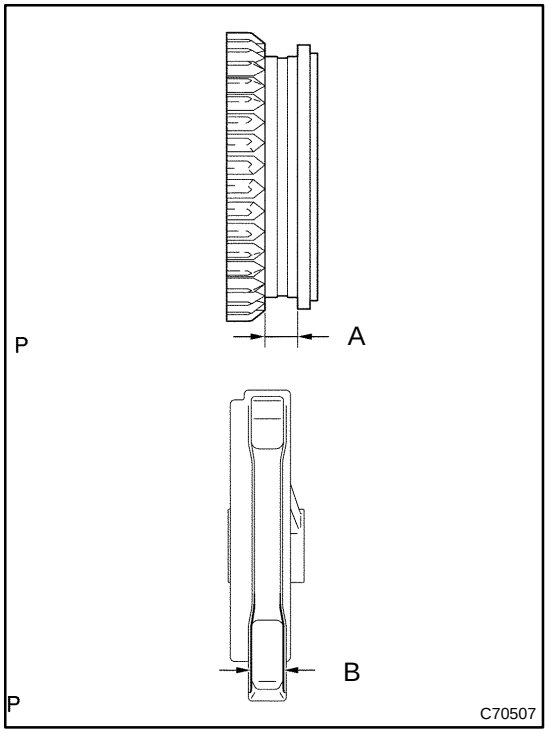

23. INSPECT REVERSE GEAR

(a) Using a vernier calipers, measure the reverse gear groove and thickness of the claw part on gear shift fork No.1, and calculate

Standard clearance:

0.15 to 0.35 mm (0.0059 to 0.0138 in.) {A − B}

If the clearance is out of the specification, replace the reverse gear and gear shift fork No.1 with the new one.

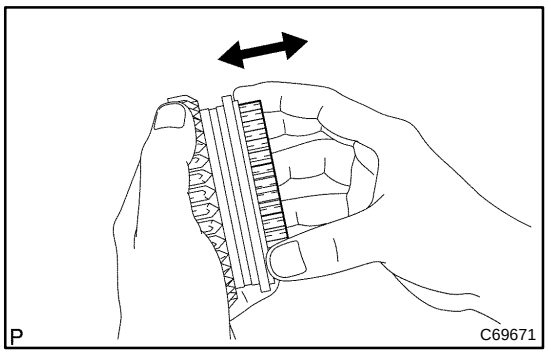

24. INSPECT TRANSMISSION CLUTCH HUB NO.1

(a) Check the sliding condition between the transmission clutch hub No.1 and reverse gear.

(b) Check the tip of spline gear on the sleeve of reverse gear for wear.

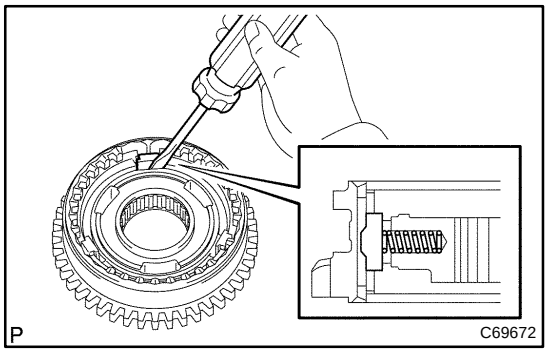

25. INSTALL REVERSE GEAR

(a) Coat the reverse gear with gear oil.

(b) Install the 3 synchromesh shifting key spring No.1 and transmission clutch hub No.1 to the reverse gear.

NOTICE:

Do not set the reverse gear and the transmission clutch hub No.1 in the incorrect direction.

(c) Using a screwdriver, install the synchromesh shifting key No.1 to the reverse gear.

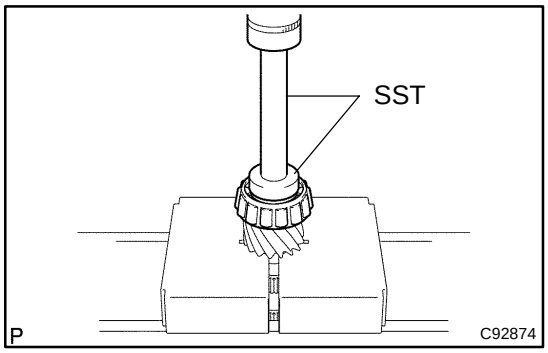

26. INSTALL OUTPUT SHAFT FRONT BEARING

(a) Using SST and a press, install the output shaft front bearing (inner race) to the output shaft.

SST 09950−60010 (09951−00430), 09950−70010 (09951−07150)

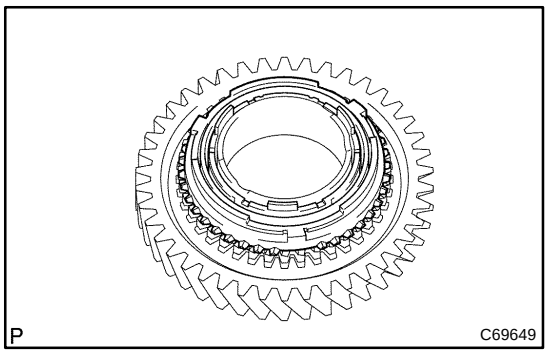

27. INSTALL SYNCHRONIZER RING SET NO.1

(a) Coat the synchronizer ring set No.1 with gear oil, install it to the 1st gear.

NOTICE:

Align the synchronizer ring set No.1 with the hole of 1st gear and install.

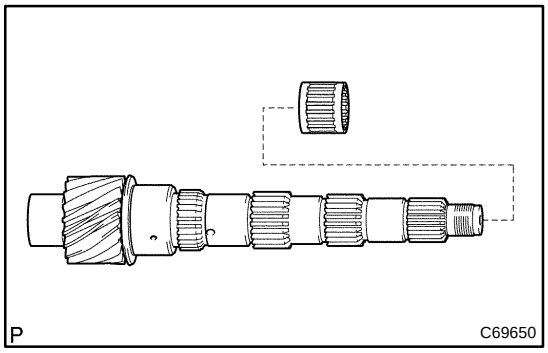

28. INSTALL 1ST GEAR NEEDLE ROLLER BEARING

(a) Coat the 1st gear needle roller bearing with gear oil, install it to the output shaft.

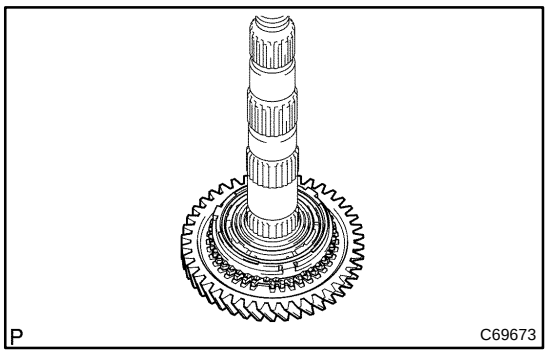

29. INSTALL 1ST GEAR

(a) Coat the 1st gear with gear oil, install it to the output shaft.

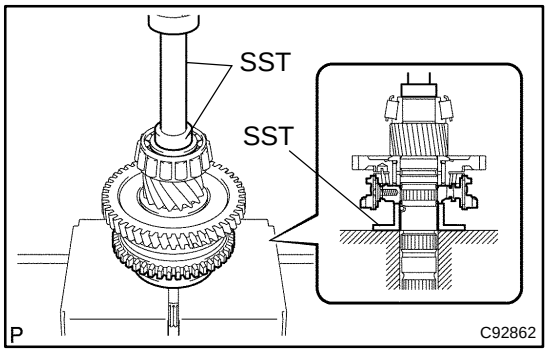

30. INSTALL TRANSMISSION CLUTCH HUB NO.1

(a) Using SST and a press, install transmission clutch hub No.1 to the output shaft.

SST 09316−60011 (09316−00031), 09950−60010 (09951−00320), 09950−70010 (09951−07100)

NOTICE:

- **Align the synchronizer ring No.1 with synchromesh shifting key No.1 and install.**
- **Make sure that the 1st gear rotates.**

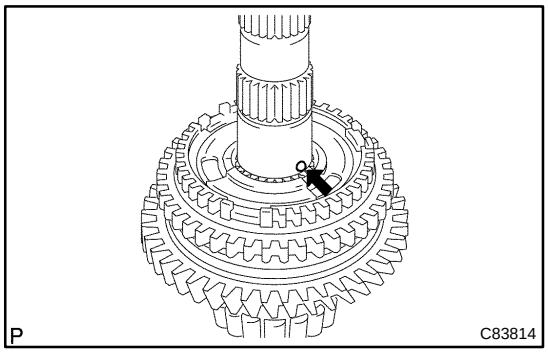

31. INSTALL 2ND GEAR BUSH BALL

(a) Coat the gear bush with MP grease, install it to the output shaft.

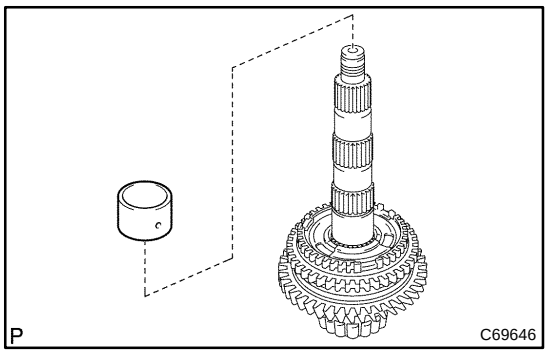

32. INSTALL 2ND GEAR BUSH

(a) Coat the 2nd gear bush with gear oil, install it to the output shaft.

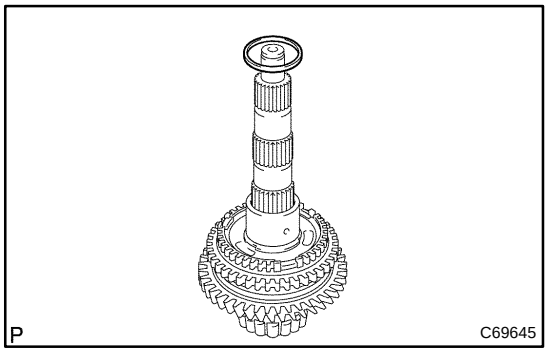

33. INSTALL 2ND GEAR BEARING SPACER

(a) Coat the 2nd gear bearing spacer with gear oil, install it to the output shaft.

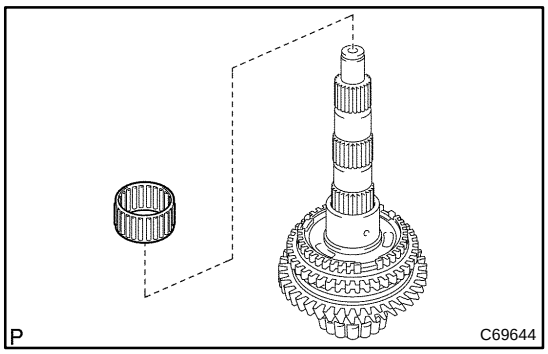

34. INSTALL 2ND GEAR NEEDLE ROLLER BEARING

(a) Coat the 2nd gear needle roller bearing with gear oil, install it to the output shaft.

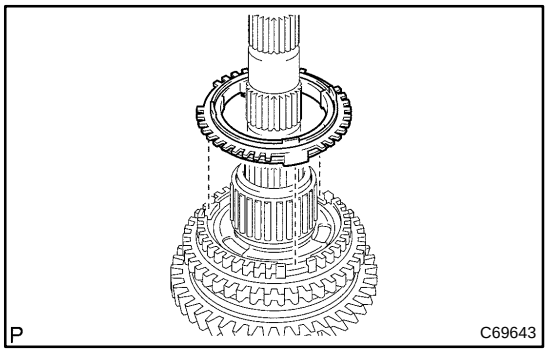

35. INSTALL SYNCHRONIZER RING SET NO.2

(a) Coat the synchronizer ring set No.2 with gear oil, install it to the transmission clutch hub No.1

NOTICE:

Align the key groove on the synchronizer ring set No.2 with the synchromesh shifting key No.1.

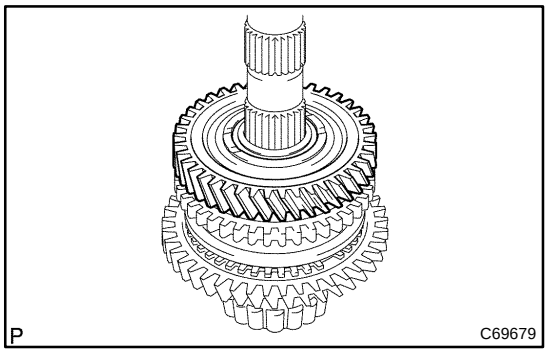

36. INSTALL 2ND GEAR

(a) Coat the 2nd gear with gear oil, install it to the output shaft.

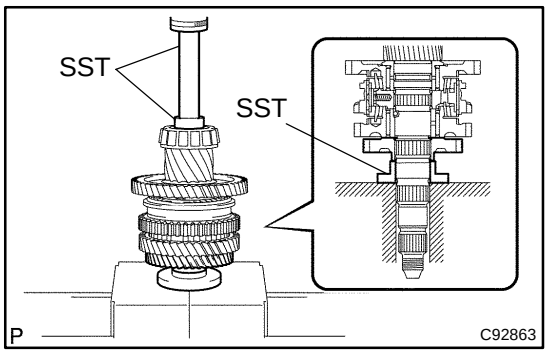

37. INSTALL 3RD DRIVEN GEAR

(a) Using SST and a press, install the 3rd driven gear to the output shaft.

SST 09608−00071, 09950−60010 (09951−00320), 09950−70010 (09951−07100)

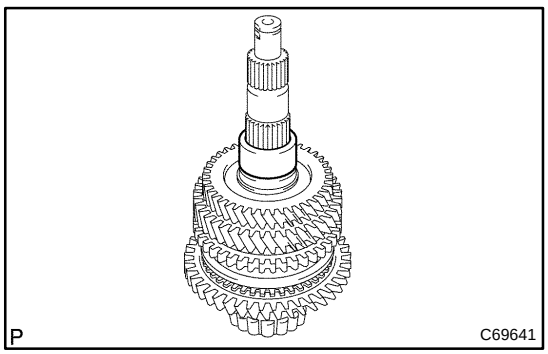

38. INSTALL OUTPUT GEAR SPACER

(a) Install the output gear spacer to the output shaft.

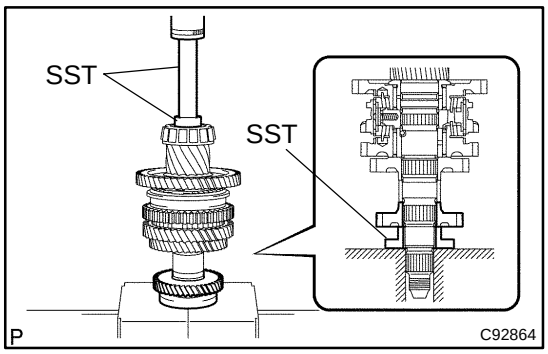

39. INSTALL 4TH DRIVEN GEAR

(a) Using SST and a press, install the 4th driven gear to the output shaft.

SST 09608−00071, 09950−60010 (09951−00320), 09950−70010 (09951−07100)

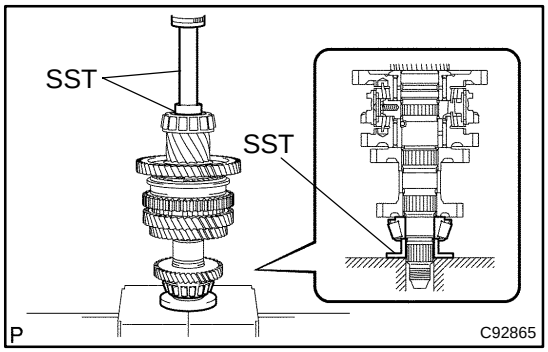

40. INSTALL OUTPUT SHAFT FRONT BEARING

(a) Using SST and a press, install the output shaft front bearing (inner race) to the output shaft.

SST 09506−30012, 09950−60010 (09951−00320), 09950−70010 (09951−07100)

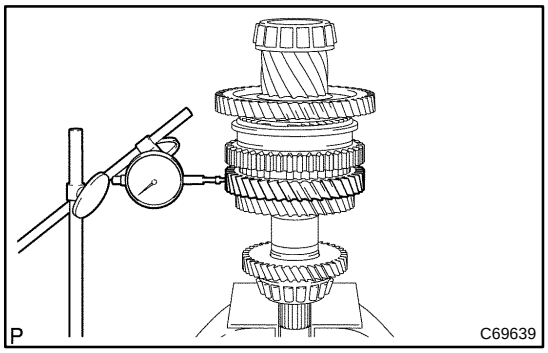

41. INSPECT 2ND GEAR RADIAL CLEARANCE

(a) Using a dial indicator, measure the 2nd gear radial clearance.

Standard clearance: mm (in.)

Bearing	Standard clearance
KOYO made	0.009 to 0.053 (0.0004 to 0.0021)
NSK made	0.009 to 0.051 (0.0004 to 0.0020)

If the clearance is out of the specification, replace the 2nd gear needle roller bearing.

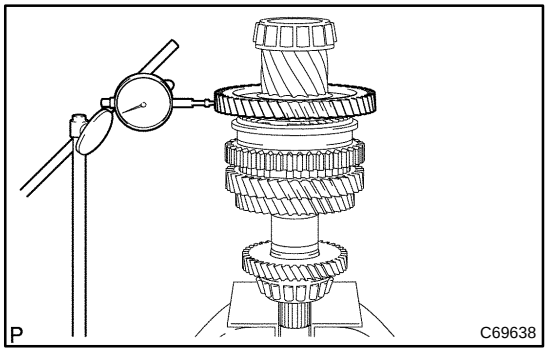

42. INSPECT 1ST GEAR RADIAL CLEARANCE

(a) Using a dial indicator, measure the 1st gear radial clearance.

Standard clearance: mm (in.)

Bearing	Standard clearance
KOYO made	0.009 to 0.053 (0.0004 to 0.0021)
NSK made	0.009 to 0.051 (0.0004 to 0.0020)

If the clearance is out of the specification, replace the 1st gear needle roller bearing.

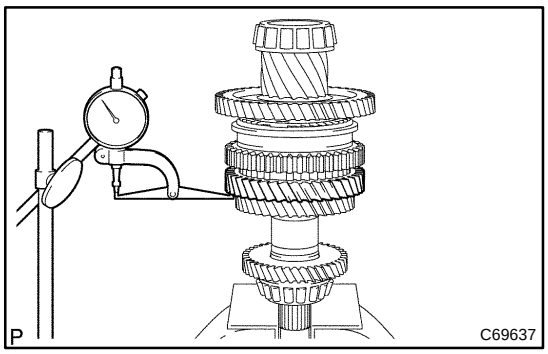

43. INSPECT 2ND GEAR THRUST CLEARANCE

(a) Using a dial indicator, measure the 2nd gear thrust clearance.

Standard clearance:
0.10 to 0.35 mm (0.0039 to 0.0138 in.)

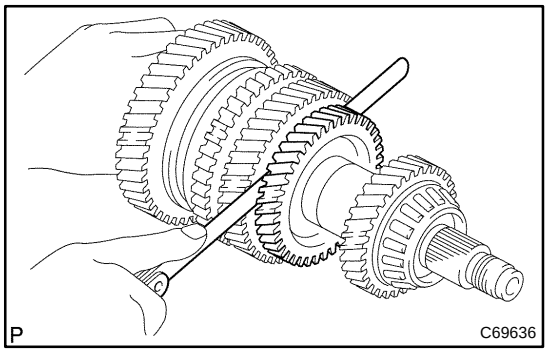

44. INSPECT 1ST GEAR THRUST CLEARANCE

(a) Using a feeler gauge, measure the 1st gear thrust clearance.

Standard clearance:
0.25 to 0.40 mm (0.0098 in. to 0.0157 in.)

SHIFT & SELECT LEVER SHAFT ASSY (E351)

OVERHAUL

4104Y−02

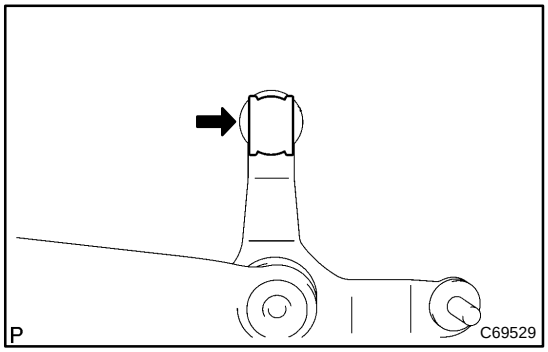

1. REMOVE CONTROL SHIFT LEVER BUSH

(a) Remove the control shift lever bush from the selecting bellcrank No.2.

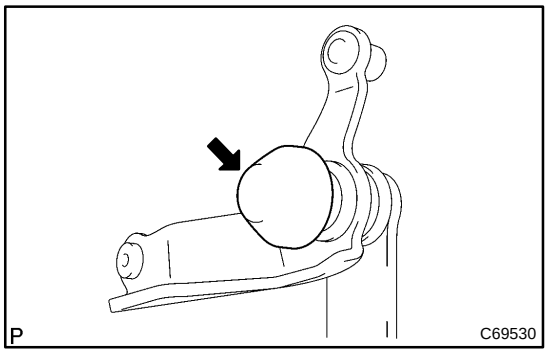

2. REMOVE SELECTING BELLCRANK DUST COVER NO.1

(a) Remove the selecting bellcrank dust cover No.1 from the selecting bellcrank No.2.

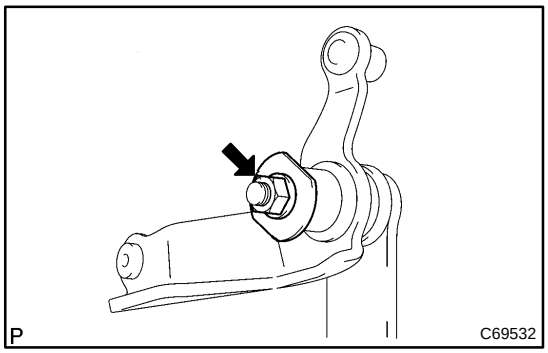

3. REMOVE SELECTING BELLCRANK SUPPORT SUB−ASSY

(a) Remove the nut, washer and selecting bellcrank No.2 plate washer from the selecting bellcrank No.2.

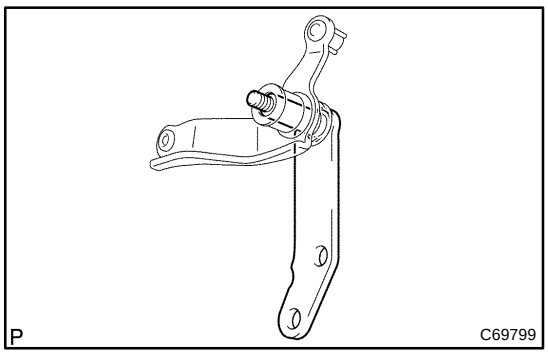

(b) Remove the selecting bellcrank support sub−assy from the selecting bell crank No.2.

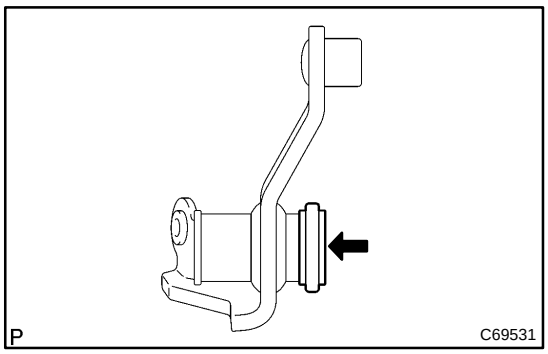

4. REMOVE SELECTING BELLCRANK DUST COVER NO.2

(a) Remove the selecting bell crank dust cover No.2 from the selecting bellcrank No.2.

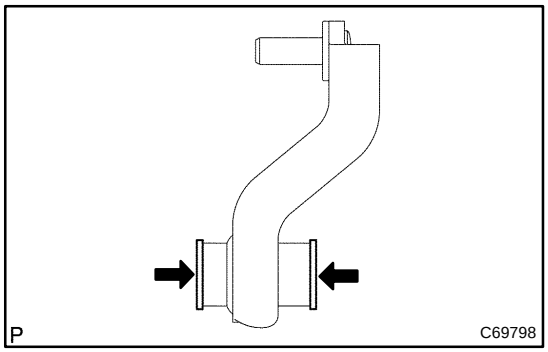

5. REMOVE SELECTING BELLCRANK NO.2 BUSH

(a) Remove the selecting bellcrank bush from the selecting bellcrank No.2.

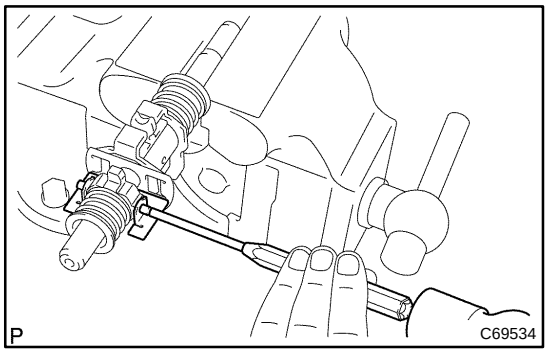

6. REMOVE SHIFT LEVER INNER NO.2

(a) Hold the shift & select lever on the vise through the soft jaw.

NOTICE:

Do not damage the shift & select lever shaft.

(b) Using a pin punch (ϕ 5 mm), remove the shift & select lever inner slotted pin and oil baffle.

NOTICE:

Do not damage the shift & select lever shaft.

(c) Apply the force to the select return spring No.1 and select return spring No.2 then hold it on the vise through the soft jaw.

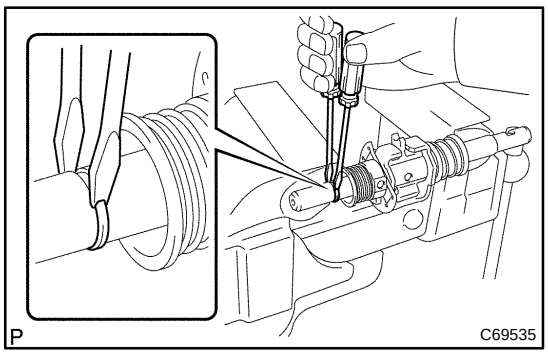

(d) Using 2 screwdrivers and a hammer, remove the select seat snap ring from the shift & select lever shaft.

NOTICE:

Do not damage the shift & select lever shaft.

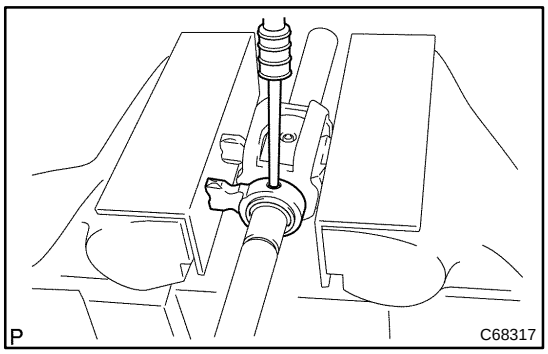

7. REMOVE SELECT SPRING SEAT NO.1

(a) Using a pin punch (ϕ 5 mm), remove the shift inner lever slotted pin from the shift & select lever shaft.

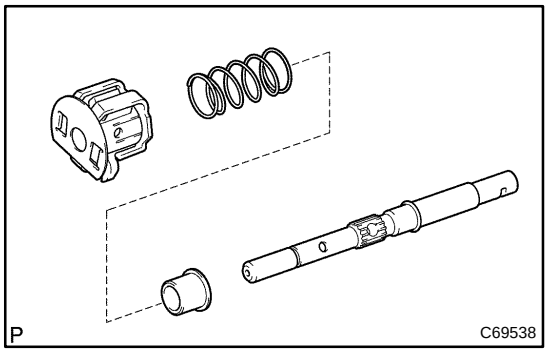

(b) Remove the shift lever assy select return spring No.1 and select spring seat from the shift & select lever shaft.

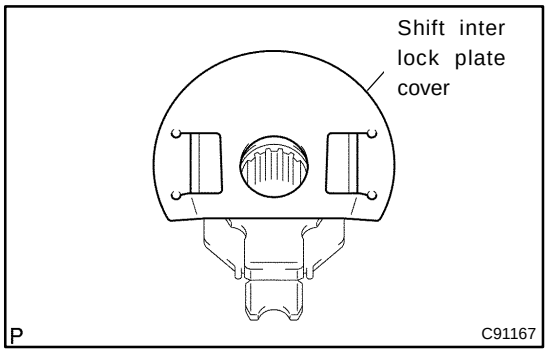

8. REMOVE SHIFT INTER LOCK PLATE COVER

(a) Remove the shift inter lock plate cover from the shift inter lock plate.

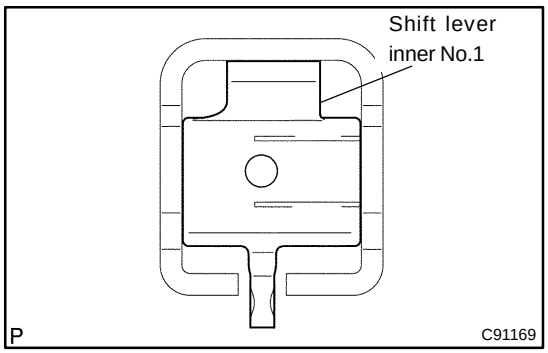

9. REMOVE SHIFT LEVER INNER NO.1

(a) Remove the shift lever inner No.1 from the shift inter lock plate.

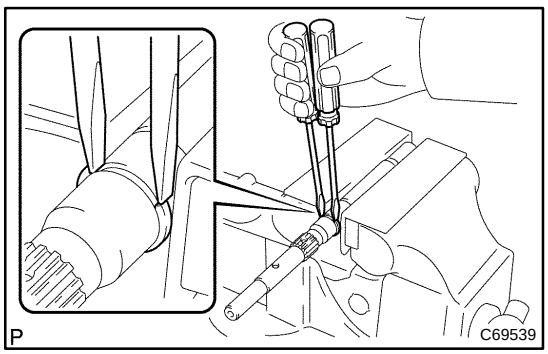

10. REMOVE SELECT SPRING NO.1 SEAT SHAFT SNAP RING

(a) Using 2 screwdrivers and a hammer, remove the select spring No.1 seat shaft snap ring.

NOTICE:

Do not damage the shaft.

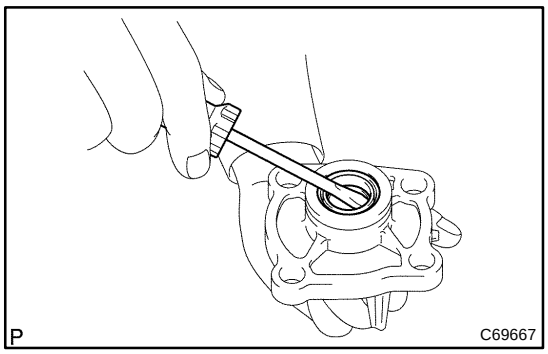

11. REMOVE CONTROL SHAFT COVER OIL SEAL

(a) Using a screwdriver, remove the control shaft cover oil seal from the control shaft cover.

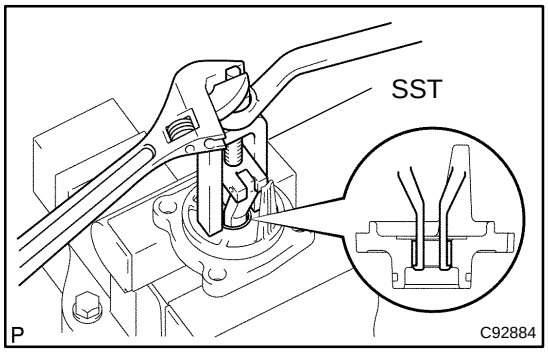

12. REMOVE CONTROL SHAFT COVER BIMETAL FORMED BUSH

(a) Using SST, remove the control shaft cover bimetal formed bush from the control shift cover.
SST 09319−60020

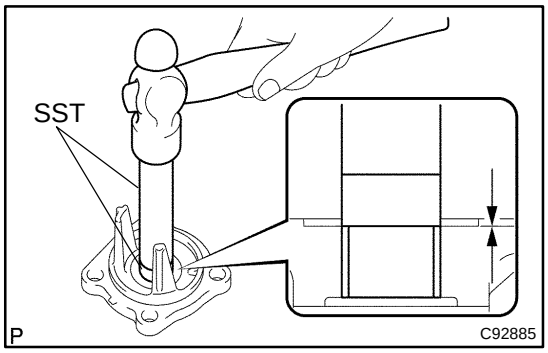

13. INSTALL CONTROL SHAFT COVER BIMETAL FORMED BUSH

(a) Using SST and hammer, install a new control shaft cover bimetal formed bush to the control shaft cover.
SST 09950−60010 (09951−00210), 09950−70010 (09951−07100)
Oil seal drive in depth:
0 ± 0.25 mm (0 ± 0.010 in.)

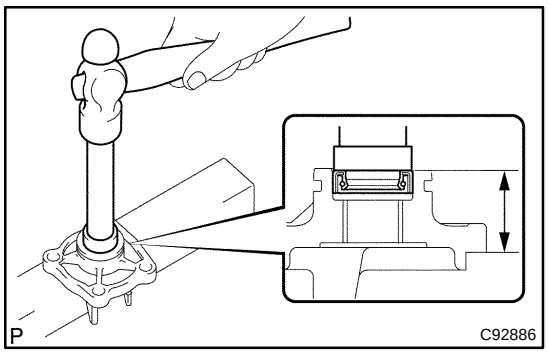

14. INSTALL CONTROL SHAFT COVER OIL SEAL

(a) Using SST and hammer, install a new control shaft cover oil seal to the control shaft cover.
SST 09950−60010 (09951−00280), 09950−70010 (09951−07100)
Oil seal drive in depth:
28.5 ± 0.50 mm (1.122 ± 0.020 in.)

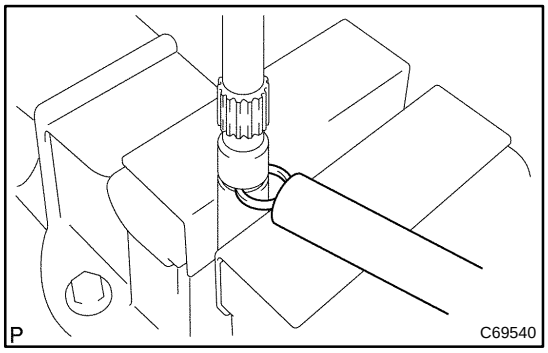

15. INSTALL SELECT SPRING NO.1 SEAT SHAFT SNAP RING

(a) Using a brass bar and a hammer, install the select spring No.1 seat shaft snap ring.

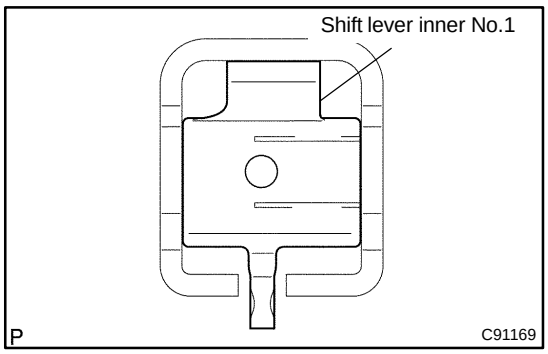

16. INSTALL SHIFT LEVER INNER NO.1

(a) Install the shift lever inner No.1 to the shift inter lock plate.

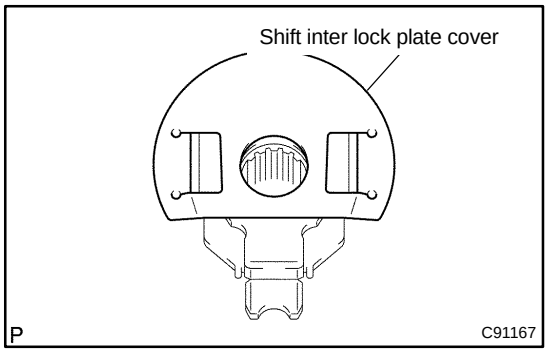

17. INSTALL SHIFT INTER LOCK PLATE COVER

(a) Install the shift inter lock plate cover to the shift inter lock plate.

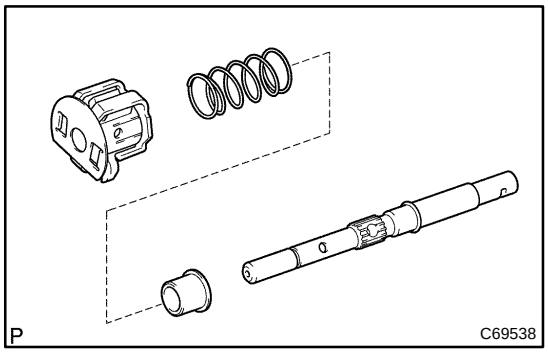

18. INSTALL SELECT SPRING SEAT NO.1

(a) Install the select spring seat No.1, select return spring No.1 and shift lever inner assy to the shift & select lever shaft.

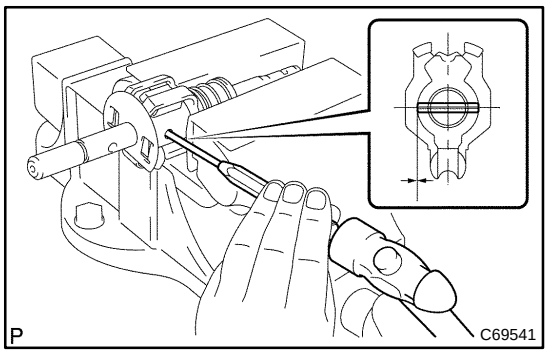

(b) Hold the shift & select lever on the vise through the soft jaw.

(c) Using a pin punch (ϕ 5 mm), install the shift lever slotted pin to the shift & select lever shaft.
Clearance: −0.5 − 0.5 mm (− 0.0197 − 0.0197 in.)

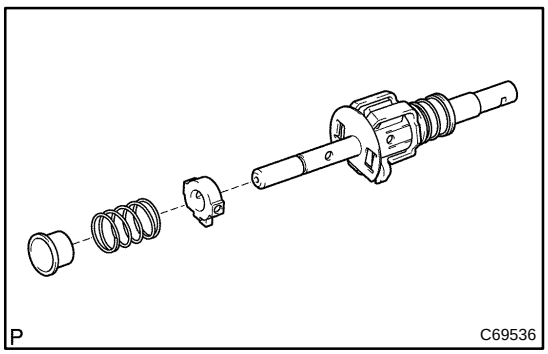

19. INSTALL SHIFT LEVER INNER NO.2

(a) Install shift lever inner No.2, select return spring No.2 and select return spring seat No.2 to the shift & select lever shaft.

(b) Using a brass bar and a hammer, install the select seat snap ring to the shift & select lever shaft.

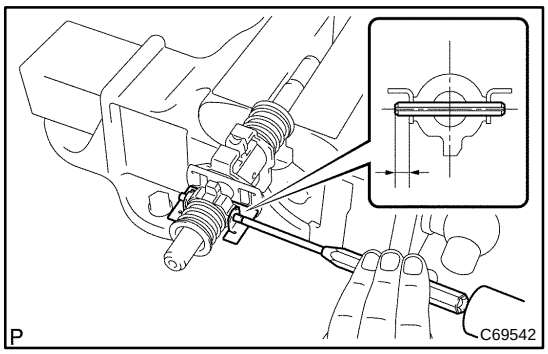

(c) Install the transmission oil baffle. Using a pin punch (ϕ 5 mm) and a hammer, install the shift inner lever slotted pin to the shift & select lever shaft.
Clearance: 5.8 to 6.8 mm (0.228 to 0.268 in.)

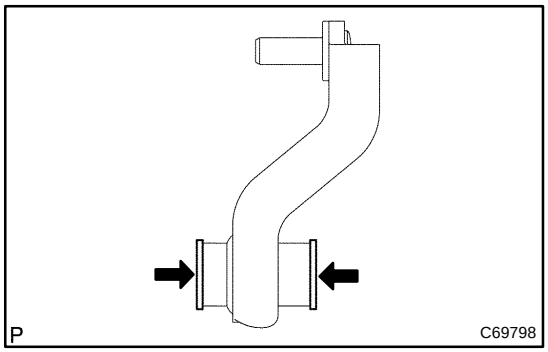

20. INSTALL SELECTING BELLCRANK NO.2 BUSH

(a) Coat the 2 selecting bellcrank No.2 bushes with MP grease, install it to the selecting bellcrank No.2.

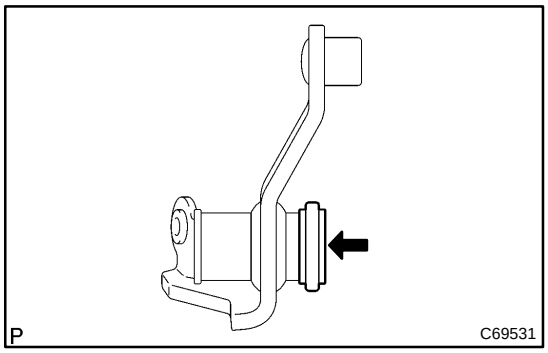

21. INSTALL SELECTING BELLCRANK DUST COVER NO.2

(a) Coat the selecting bellcrank dust cover No.2 with MP grease, install it to the selecting bellcrank No.2.

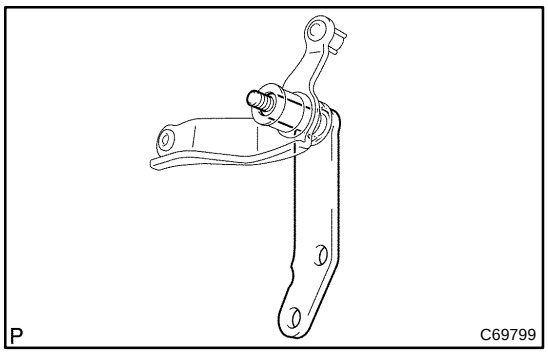

22. INSTALL SELECTING BELLCRANK SUPPORT SUB−ASSY

(a) Install the selecting bellcrank support sub−assy to the selecting bellcrank No.2.

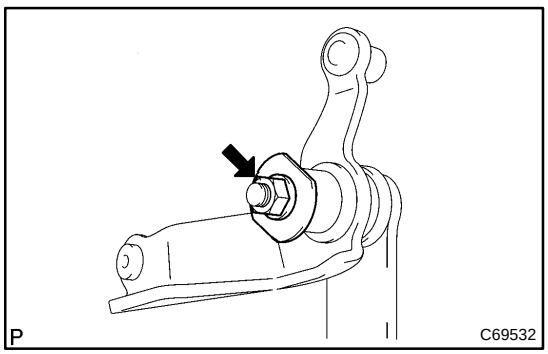

(b) Install the selecting bellcrank No.2 plate washer, washer and nut.
Torque: 12 N·m (122 kgf·cm, 9 ft·lbf)

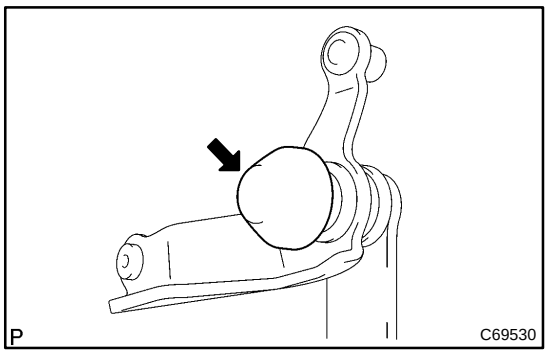

23. INSTALL SELECTING BELLCRANK DUST COVER NO.1

(a) Install the selecting bellcrank dust cover No.1 to the selecting bellcrank No.2.

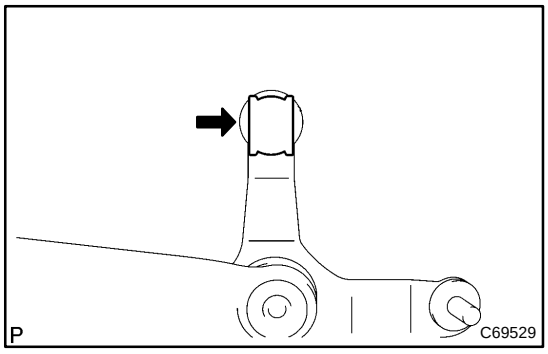

24. INSTALL CONTROL SHIFT LEVER BUSH

(a) Install the control shift lever bush to the selecting bell crank No.2.

DIFFERENTIAL CASE ASSY (E351)

OVERHAUL

4104X−03

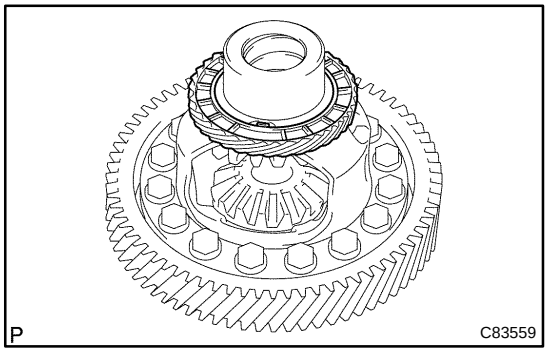

1. REMOVE SPEEDOMETER DRIVE (MTM) GEAR

(a) Remove the speedometer drive (MTM) gear from front differential case assy.

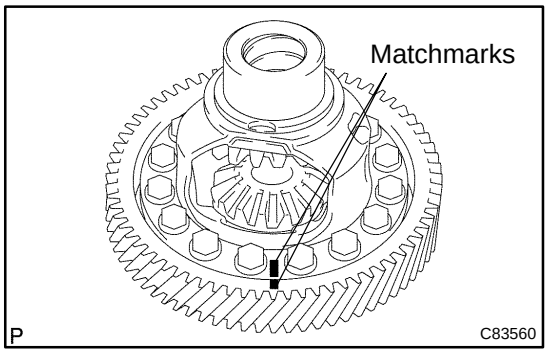

2. REMOVE FRONT DIFFERENTIAL RING GEAR

(a) Place machmarks on the front differential ring gear and from the front differential case.

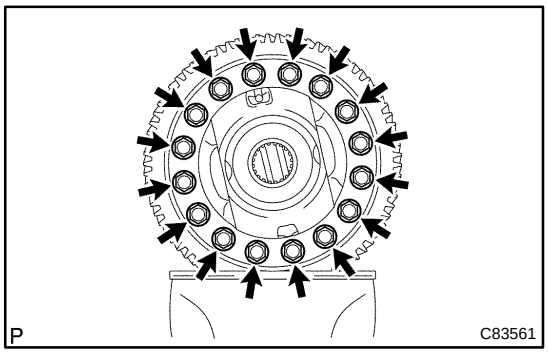

(b) Remove the 16 bolts. Using a plastic hammer, remove the front differential case.

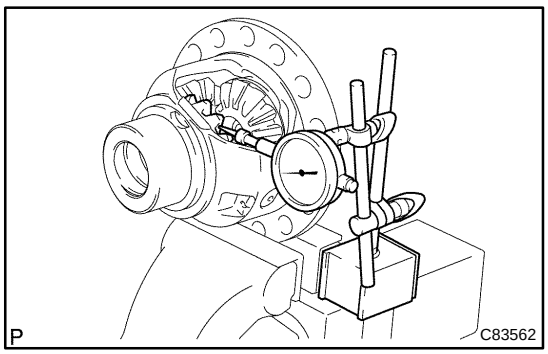

3. INSPECT FRONT DIFFERENTIAL SIDE GEAR BACKLASH

(a) Fixing the front differential pinion to the front differential case side. Using a dial indicator, measure the front differential side gear backlash.

Standard backlash:
0.10 to 0.20 mm (0.0039 to 0.0079 in.)

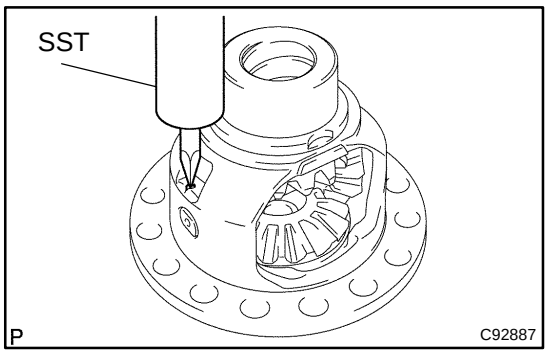

4. REMOVE FRONT DIFFERENTIAL PINION SHAFT STRAIGHT PIN

(a) Using SST and a hammer, unstake the stacked part of the front differential case.
SST 09930−00010

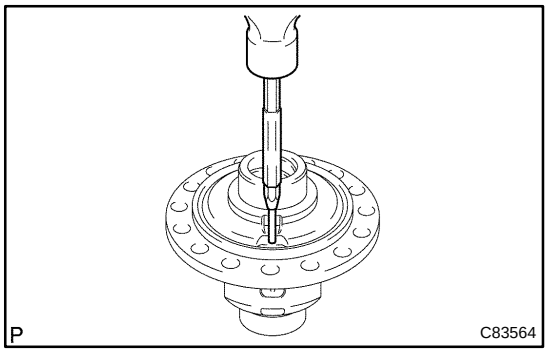

(b) Using a pin punch and a hammer, remove the front differential pinion shaft straight pin from the front differential case.

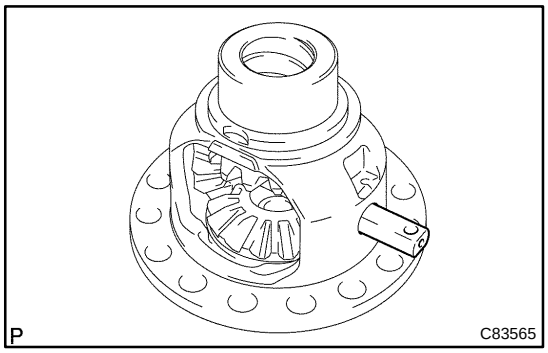

5. REMOVE FRONT DIFFERENTIAL PINION SHAFT NO.1

(a) Remove the front differential pinion shaft No.1 to the front differential case.

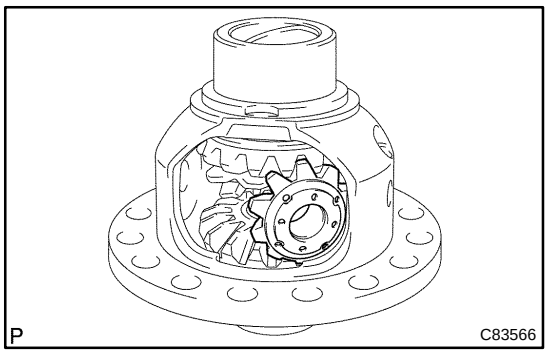

6. REMOVE FRONT DIFFERENTIAL SIDE GEAR

(a) Remove the 2 front differential pinions, 2 front differential pinion thrust washers, 2 front differential side gear and 2 front differential side gear thrust washers from the front differential case.

HINT:
Revolving front differential pinion, remove the 2 pinion thrust washers and side gear thrust washers.

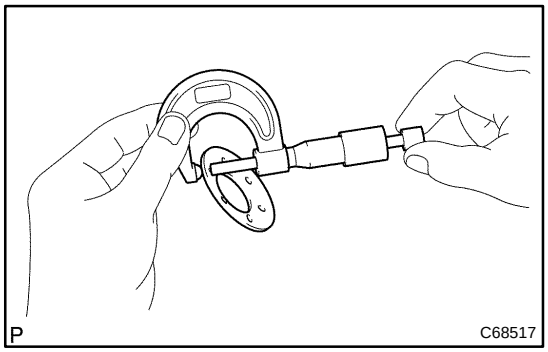

7. INSPECT FRONT DIFFERENTIAL PINION THRUST WASHER

(a) Using a micrometer, measure the thickness of the front differential pinion thrust washer.
Minimum thickness: 0.9 mm (0.035 in.)

If the thickness smaller than the minimum, replace the front differential pinion thrust washer.

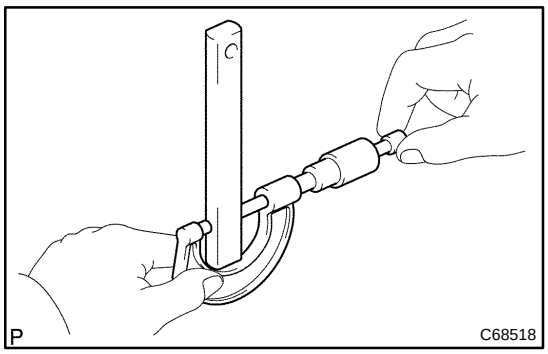

8. INSPECT FRONT DIFFERENTIAL PINION SHAFT NO.1

(a) Using a micrometer, measure the outer diameter of the front differential pinion shaft No.1.
Minimum thickness: 17.975 mm (0.70768 in.)

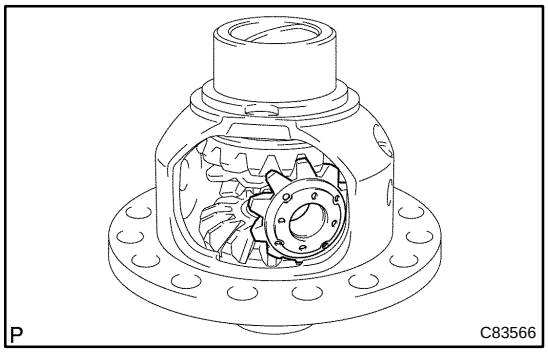

9. INSTALL FRONT DIFFERENTIAL SIDE GEAR

(a) Coat the rotating surface of the front differential side gear with gear oil.
(b) Install the 2 front differential side gear thrust washers to the 2 front differential side gears.

HINT:
Install the front differential side gear as thick as the removed one.

(c) Install the 2 front differential side gears, 2 front differential pinions and 2 front differential side gear thrust washers to the front differential case.

HINT:
Revolving the front differential pinion, install the 2 front differential pinions with front differential washers.

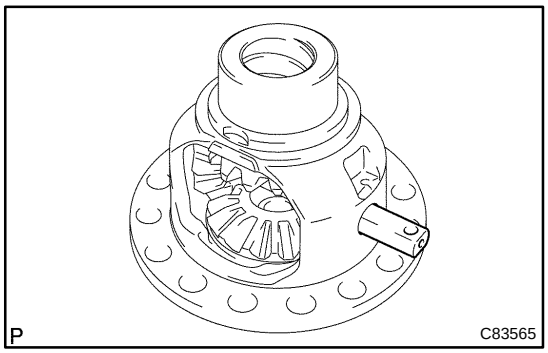

10. INSTALL FRONT DIFFERENTIAL PINION SHAFT NO.1

(a) Coat the rotating surface of the front differential pinion shaft No.1 with gear oil.
(b) Install the front differential pinion shaft No.1 to the front differential case so that the hole for the front differential pinion shaft straight pin is aligned with the hole in the front differential case.

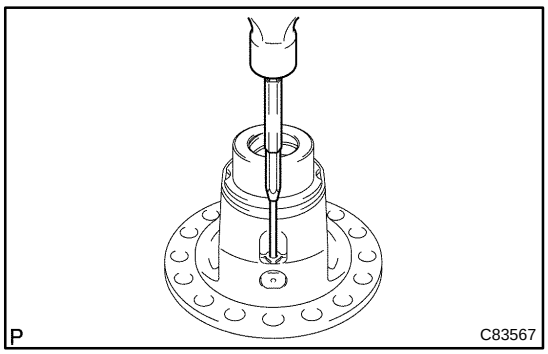

11. INSTALL FRONT DIFFERENTIAL PINION SHAFT STRAIGHT PIN

(a) Using a pin punch and a hammer, install the front differential pinion shaft straight pin to the front differential case.

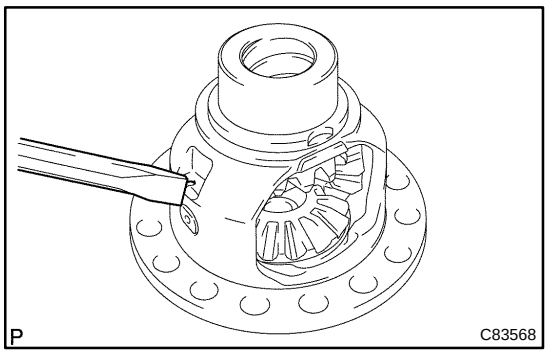

(b) Using a chisel and hammer, stake the front differential case hole.

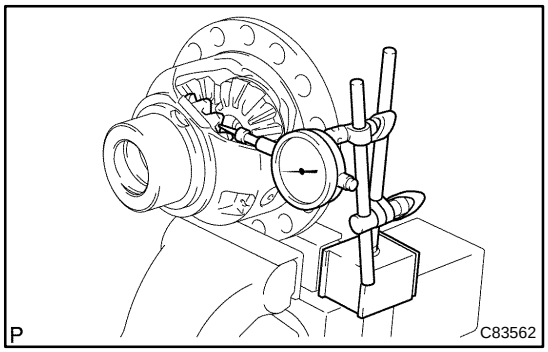

12. ADJUST FRONT DIFFERENTIAL SIDE GEAR BACKLASH

(a) Hold the front differential pinion to the front differential case side. Using a dial indicator, measure the front differential side gear backlash.
Standard backlash: 0.10 to 0.20 mm (0.0039 to 0.0079 in.)

(b) If the backlash is out of the specification, select another front differential side gear thrust washer and adjust it.
Thrust washer: mm (in.)

Part No.	Thickness	Mark
41361−28230	1.00 (0.0394)	1
41361−28240	1.10 (0.0433)	2
41361−28250	1.20 (0.0472)	3
41361−28260	1.30 (0.0512)	4

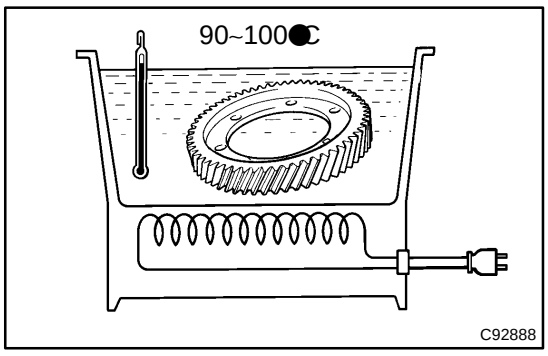

13. INSTALL FRONT DIFFERENTIAL RING GEAR

(a) Using a heater, heat the front differential ring gear to 90 − 100 °C (194.0 − 230.0 °F).

(b) Clean the contact surface differential case.

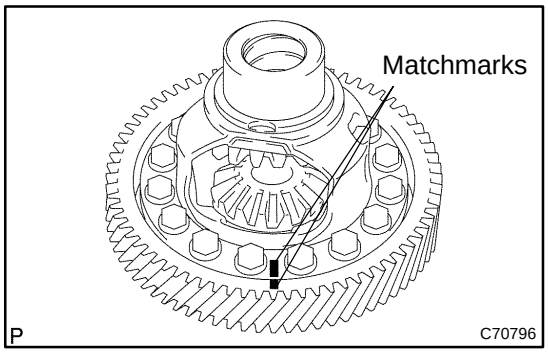

(c) Aligning the matchmarks, quickly install the front differential ring gear to the front differential case.
Torque: 106 N·m (1,081 kgf·cm, 78 ft·lbf)

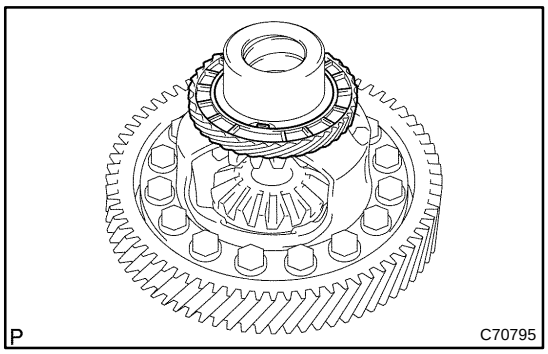

14. INSTALL SPEEDOMETER DRIVE (MTM) GEAR

(a) Install the speedometer drive (MTM) gear to the front differential case.

CLUTCH SYSTEM (From July, 2003)

4202B−05

PROBLEM SYMPTOMS TABLE

HINT:

Use the table below to help you find the cause of the problem. The numbers indicate the priority of the likely causes of the problem. Check each part in order. If necessary, replace these parts.

Symptom	Suspected Area	See page
Clutch grabs/chatters	1. Engine mounting (Loosen)	−
	2. Clutch disc (Runout is excessive)	42−15
	3. Clutch disc (Oily)	42−15
	4. Clutch disc (Worn out)	42−15
	5. Clutch disc torsion rubber (Damaged)	42−15
	6. Clutch disc (Glazed)	42−15
	7. Diaphragm spring (Out of tip alignment)	42−15
Clutch pedal is spongy	1. Clutch line (Air in line)	−
	2. Master cylinder cup (Damaged)	42−9
	3. Release cylinder rubber(Damaged)	30−2
Clutch is noisy	1. Release bearing (Worn, dirty, or damaged)	42−15
	2. Clutch disc torsion rubber (Damaged)	42−15
Clutch slips	1. Clutch pedal (Free play is out of adjustment)	42−7
	2. Clutch disc (Oily)	42−15
	3. Clutch disc (Worn out)	42−15
	4. Diaphragm spring (Damaged)	42−15
	5. Pressure plate (Distortion)	42−15
	6. Flywheel (Distortion)	−
Clutch does not disengage	1. Clutch pedal (Free play is out of adjustment)	42−7
	2. Clutch line (Air in line)	−
	3. Master cylinder cup (Damaged)	42−9
	4. Release cylinder cup (Damaged)	30−2
	5. Clutch disc (Out of true)	42−15
	6. Clutch disc (Runout is excessive)	42−15
	7. Clutch disc (Lining broken)	42−15
	8. Clutch disc (Dirty or burned)	42−15
	9. Clutch disc (Oily)	42−15
	10.Clutch disc (Lack of spline grease)	42−15

CLUTCH PEDAL SUB−ASSY

4202C−03

REPLACEMENT

1. **REMOVE INSTRUMENT CLUSTER FINISH PANEL (SEE PAGE 71−16)**
2. **REMOVE COMBINATION METER ASSEMBLY (SEE PAGE 71−29)**
3. **REMOVE INSTRUMENT PANEL SUB−ASSY UPPER (SEE PAGE 71−16)**
4. **REMOVE INSTRUMENT PNL INSERT SUB−ASSY LWR LH (SEE PAGE 71−16)**
5. **REMOVE CLUTCH MASTER CYLINDER PUSH ROD CLEVIS W/HOLE PIN**

(a) Remove the clip and hole pin.

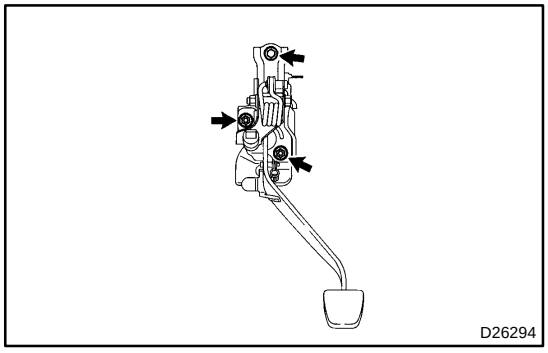

6. **REMOVE CLUTCH PEDAL ASSY**

(a) Disconnect the clutch start switch clamp and connector.
(b) Remove the bolt, 2 nuts and clutch pedal assy.

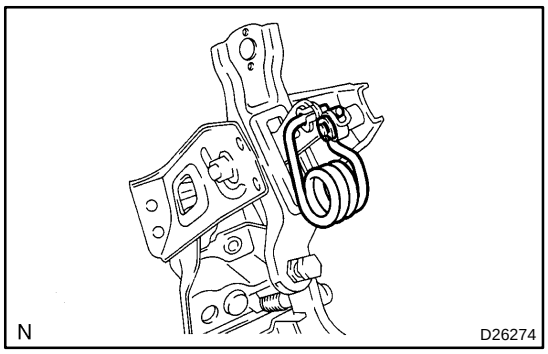

7. **REMOVE TURN OVER SPRING SEAT COMPRESSION SPRING**

(a) Using a small screwdriver, remove the E−ring.
(b) Remove the compression spring.

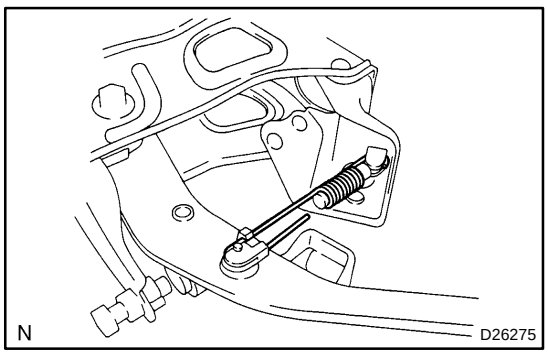

8. **REMOVE CLUTCH PEDAL SUB−ASSY**

(a) Remove the clutch pedal spring.
(b) Mount the clutch pedal assy in a soft jaw vise.

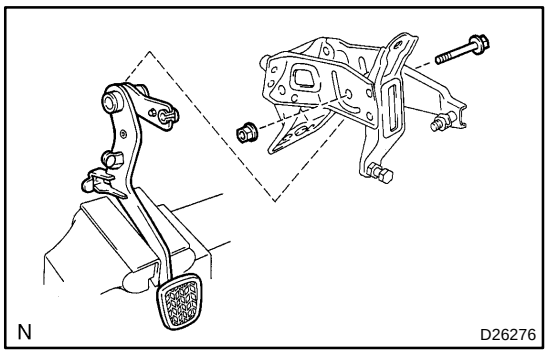

(c) Remove the bolt, nut and clutch pedal sub−assy from clutch pedal support.

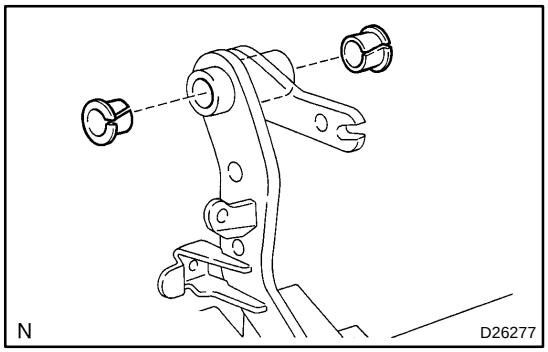

9. REMOVE CLUTCH PEDAL BUSH

(a) Remove the 2 bushes from the clutch pedal sub−assy.

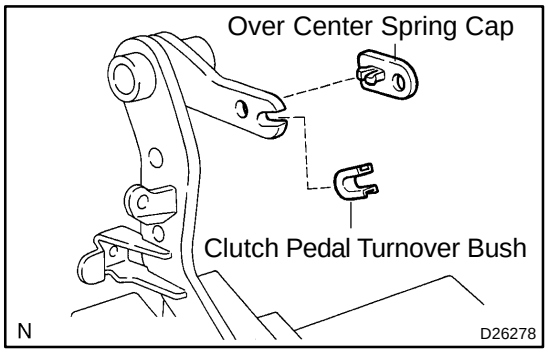

10. REMOVE CLUTCH PEDAL TURNOVER BUSH

11. REMOVE OVER CENTER SPRING CAP

12. REMOVE CLUTCH PEDAL PAD

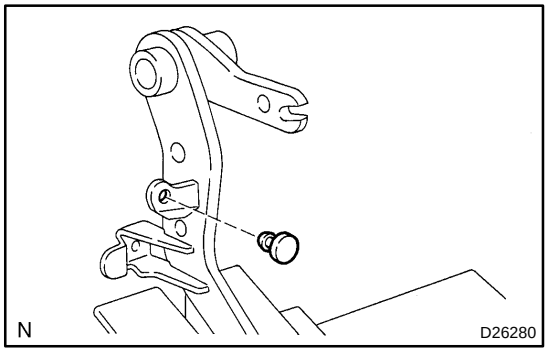

13. REMOVE CLUTCH PEDAL NO.1 CUSHION

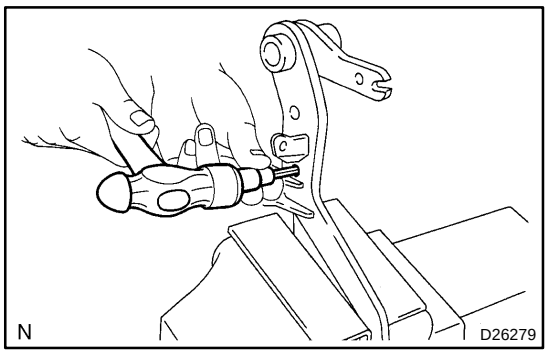

14. REMOVE CLUTCH MASTER CYLINDER PUSH ROD CLEVIS BUSH

(a) Using a hexagon wrench (8 mm) and hammer, remove the clevis bush from the clutch pedal sub−assy.

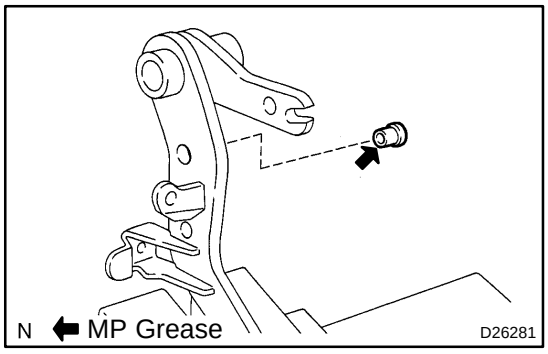

15. INSTALL CLUTCH MASTER CYLINDER PUSH ROD CLEVIS BUSH

(a) Apply MP grease to inside of a new bush.
(b) Install the clevis bush to the clutch pedal sub−assy.

HINT:
Install the clevis bush from the right side of the vehicle.

16. INSTALL CLUTCH PEDAL NO.1 CUSHION

17. INSTALL CLUTCH PEDAL PAD

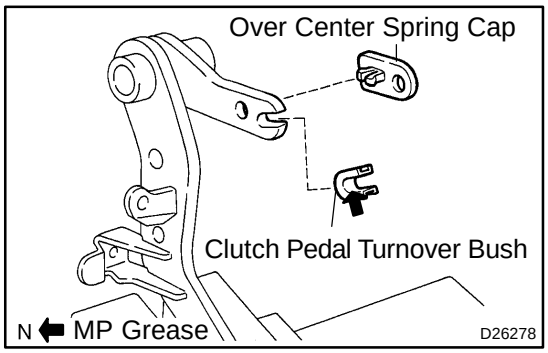

18. INSTALL OVER CENTER SPRING CAP

19. INSTALL CLUTCH PEDAL TURNOVER BUSH

(a) Apply MP grease to inside of a new bush.
(b) Install the bush to the clutch pedal sub−assy.

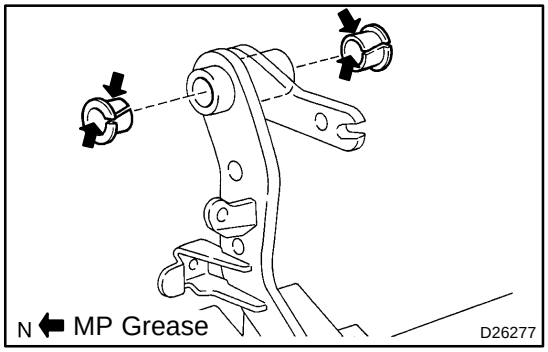

20. INSTALL CLUTCH PEDAL BUSH

(a) Apply MP grease to both side of 2 new bushes.
(b) Install the 2 bushes to the clutch pedal sub−assy.

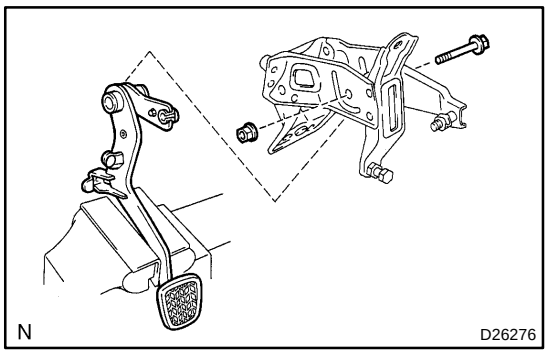

21. INSTALL CLUTCH PEDAL SUB−ASSY

(a) Install the clutch pedal sub−assy to the clutch pedal support with the bolt and nut.
Torque: 37 N·m (375 kgf·cm, 27 ft·lbf)

HINT:
Install the bolt from the right side of the vehicle.

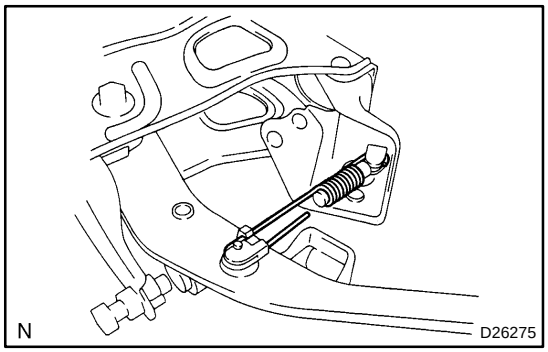

(b) Install the clutch pedal spring.

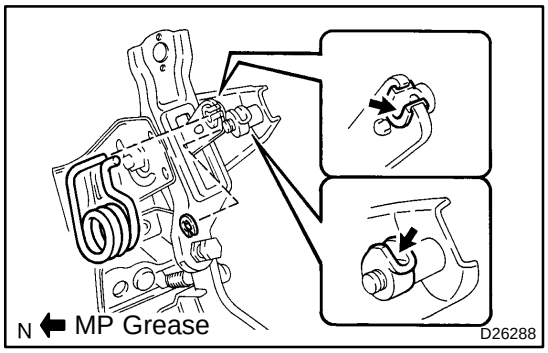

22. INSTALL TURN OVER SPRING SEAT COMPRESSION SPRING

(a) Apply MP grease to the contact surface of the bush and spring.
(b) Install the compression spring.
(c) Using needle nose pliers, install the E−ring.

23. INSTALL CLUTCH PEDAL ASSY

(a) Install the clutch pedal assy with the bolt and 2 nuts.
Torque:
Bolt: 19 N·m (195 kgf·cm, 14 ft·lbf)
Nut: 12 N·m (120 kgf·cm, 9 ft·lbf)

(b) Connect the clutch start switch clamp and connector.

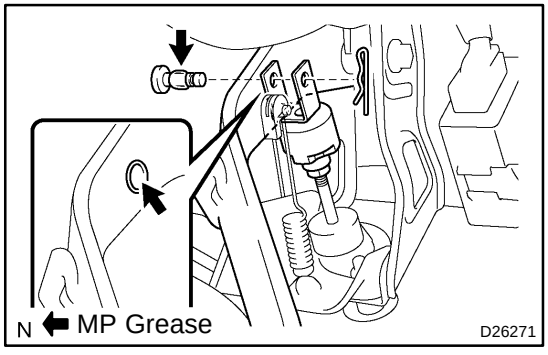

24. INSTALL CLUTCH MASTER CYLINDER PUSH ROD CLEVIS W/HOLE PIN

(a) Apply MP grease to the contact surface of the hole pin and bush.
(b) Connect the clevis to the clutch pedal assy with the hole pin.

HINT:
Install the hole pin from the left side of the vehicle.

(c) Install the clip to the hole pin.

25. INSTALL INSTRUMENT PNL INSERT SUB−ASSY LWR LH

26. INSTALL INSTRUMENT PANEL SUB−ASSY UPPER

27. INSTALL COMBINATION METER ASSEMBLY
(SEE PAGE 71−29)
28. INSTALL INSTRUMENT CLUSTER FINISH PANEL
(SEE PAGE 71−16)
29. INSPECT AND ADJUST CLUTCH PEDAL SUB−ASSY
(SEE PAGE 42−7)
30. INSPECT CLUTCH START SWITCH ASSY
(SEE PAGE 42−19)

4202D−03

ADJUSTMENT

1. INSPECT AND ADJUST CLUTCH PEDAL SUB−ASSY

(a) Turn over the floor carpet.

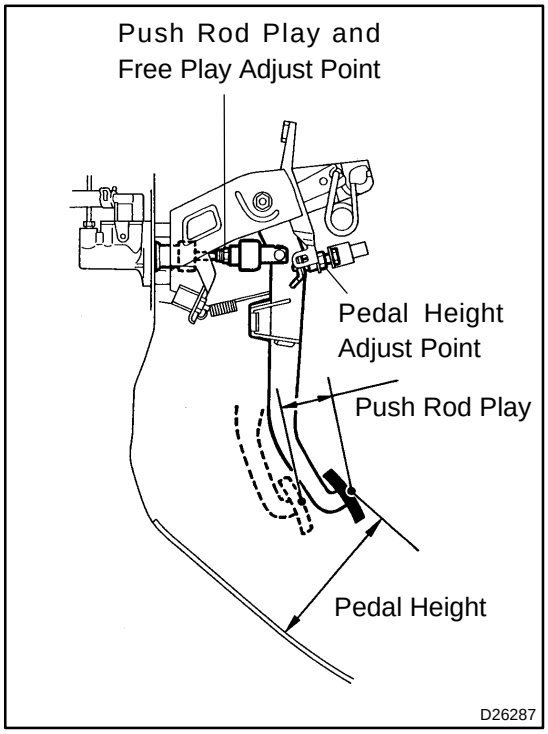

(b) Check that the pedal height is correct.
Pedal height from asphalt sheet:
159.0 to 169.0 mm (6.260 − 6.654 in.)

(c) Adjust the pedal height.
(1) Loosen the lock nut and turn the stopper bolt until the height is correct. Tighten the lock nut.
Torque: 26 N·m (260 kgf·cm, 19 ft·lbf)

(d) Check that the pedal free play and push rod play are correct.
(1) Depress the pedal until the clutch resistance begin to be felt.
Pedal free play: 5.0 to 15.0 mm (0.197 − 0591 in.)
(2) Gently depress the pedal until the resistance begins to increase a little.
Push rod play at pedal top:
1.0 − 5.0 mm (0.039 − 0.197 in.)

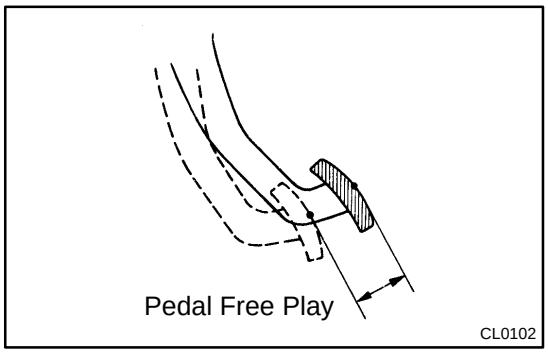

(e) Adjust the pedal free play and push rod play.
(1) Remove the instrument panel sub−assy upper.
(2) Remove the instrument panel insert sub−assy lower LH.
(3) Disconnect the air duct.
(4) Loosen the lock nut and turn the push rod until the free play and push rod play are correct.
(5) Tighten the lock nut.
(6) After adjusting the pedal free play, check the pedal height.
(7) Connect the air duct.
(8) Install the instrument panel insert sub−assy lower LH.
(9) Install the instrument panel sub−assy upper.

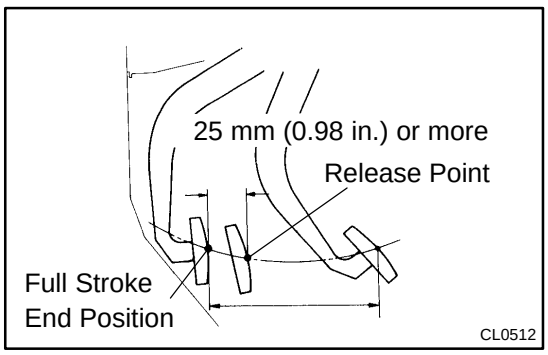

(f) Check the clutch release point.
(1) Pull the parking brake lever and install wheel stopper.
(2) Start the engine and idle the engine.
(3) Without depressing the clutch pedal, slowly shift the shift lever into reverse position until the gears contact.

(4) Gradually depress the clutch pedal and measure the stroke distance from the point that the gear noise stops (release point) up to the full stroke end position.

Standard distance: 25 mm (0.98 in.) or more
(From pedal stroke end position to release point)

If the distance is not as specified, perform the following operations.

- Check pedal height.
- Check push rod play and pedal free play.
- Bleed the clutch line.
- Check the clutch cover assy and disc assy.

CLUTCH MASTER CYLINDER ASSY

4202E−07

OVERHAUL

1. DRAIN CLUTCH FLUID

2. REMOVE BRAKE MASTER CYLINDER SUB−ASSY (SEE PAGE 27−4)

3. REMOVE BRAKE BOOSTER ASSY (SEE PAGE 26−19)

4. DISCONNECT CLUTCH RESERVOIR TUBE

(a) Loosen the clip and disconnect the clutch reservoir tube from the clutch master cylinder assy.

HINT:

Use a container to catch the fluid.

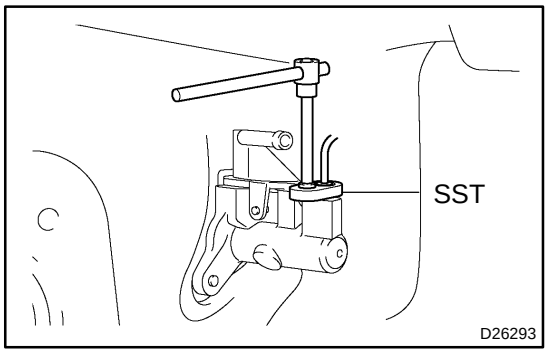

5. DISCONNECT CLUTCH MASTER CYLINDER TO FLEXIBLE HOSE TUBE

(a) Using SST, disconnect the flexible hose tube.

HINT:

Use a container to catch the fluid.

SST 09023−00101

6. REMOVE CLUTCH MASTER CYLINDER PUSH ROD CLEVIS W/HOLE PIN

(a) Remove the clip and hole pin.

7. REMOVE CLUTCH MASTER CYLINDER ASSY

(a) Remove the 2 nuts and clutch master cylinder assy.

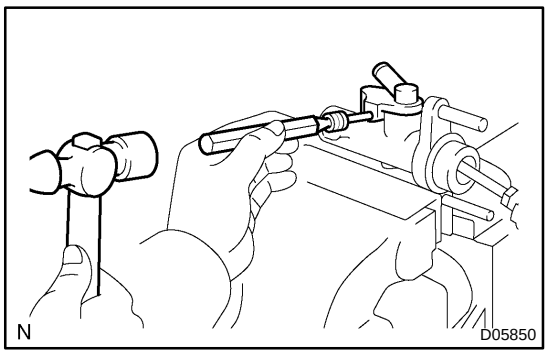

8. REMOVE CLUTCH MASTER CYLINDER KIT

(a) Using a pin punch (ϕ 5 mm) and hammer, drive out the slotted spring pin.

(b) Remove the inlet union and grommet.

(c) Loosen the lock nut, and remove the push rod clevis.

(d) Remove the lock nut from the push rod.

(e) Remove the boot from the cylinder body.

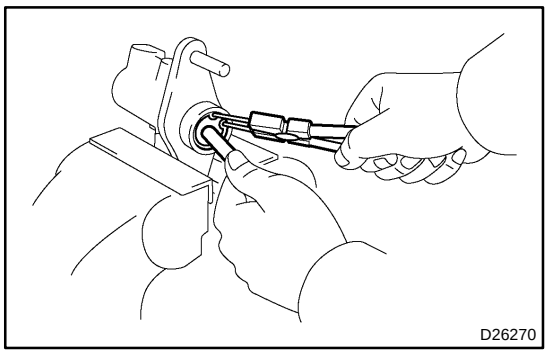

(f) While pushing the piston rod, using snap ring pliers, remove the snap ring.
(g) Remove the push rod from the cylinder body.

NOTICE:

The piston may pop up out of the cylinder body. Therefore, slowly remove the push rod from the cylinder body.

(h) Remove the stop plate from the push rod.
(i) Remove the piston with spring from the cylinder.

NOTICE:

Be careful not to damage the inside of the cylinder body.

9. INSTALL CLUTCH MASTER CYLINDER KIT

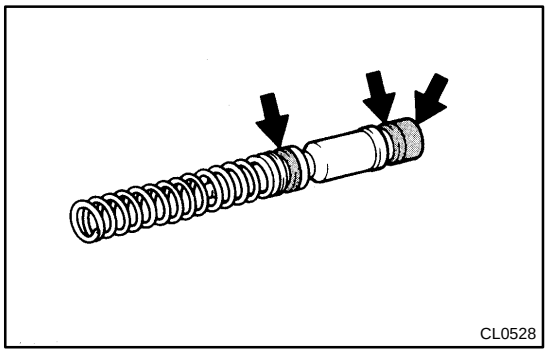

(a) Coat parts with lithium soap base glycol grease, shown in the illustration.
(b) Install the piston with spring into the cylinder.

NOTICE:

Be careful not to damage the inside of the cylinder body.

(c) Install the stop plate to the push rod.
(d) Install the push rod to the cylinder body.

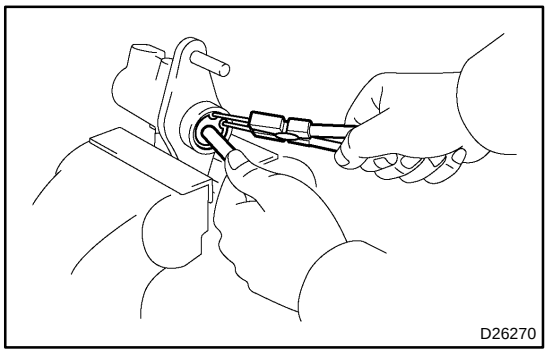

(e) While pushing the piston rod, using snap ring pliers, install the snap ring.
(f) Install the boot to the cylinder body.
(g) Install the lock nut to the push rod.
(h) Temporarily install the push rod clevis with the lock nut to the push rod.
(i) Install the inlet union and a new grommet.

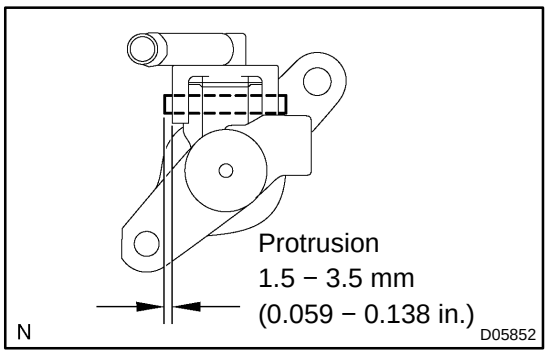

(j) Using a pin punch (ϕ 5 mm) and hammer, drive in the slotted spring pin.

10. INSTALL CLUTCH MASTER CYLINDER ASSY

(a) Install the clutch master cylinder assy with the 2 nuts.
Torque: 12 N·m (120 kgf·cm, 9 ft·lbf)

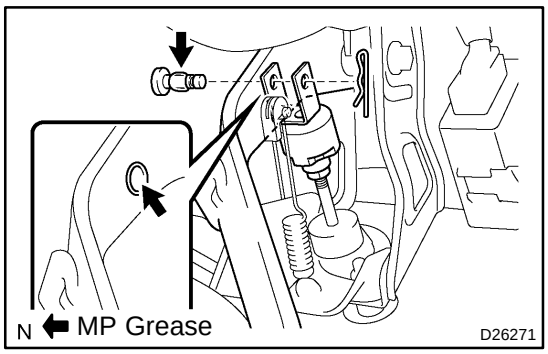

11. INSTALL CLUTCH MASTER CYLINDER PUSH ROD CLEVIS W/HOLE PIN

(a) Apply MP grease to the contact surface of the hole pin and bush.
(b) Connect the clevis to the clutch pedal assy with the hole pin.

HINT:
Install the hole pin from the left side of the vehicle.

(c) Install the clip to the hole pin.

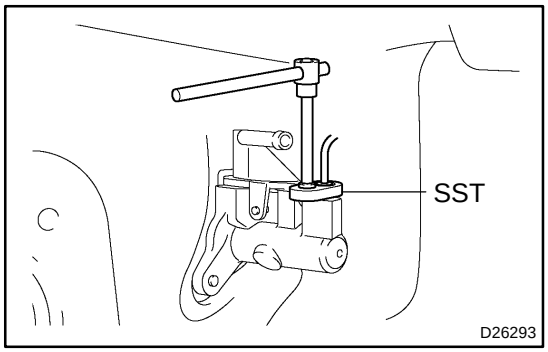

12. CONNECT CLUTCH MASTER CYLINDER TO FLEXIBLE HOSE TUBE

(a) Using SST, connect the flexible hose tube.
Torque: 15 N·m (155 kgf·cm, 11 ft·lbf)
SST 09023−00101

13. CONNECT CLUTCH RESERVOIR TUBE

(a) Connect the clutch reservoir tube with the clip to the clutch master cylinder assy.

NOTICE:
Connect the clutch reservoir tube so that it will not be twisted.

14. INSTALL BRAKE BOOSTER ASSY
(SEE PAGE 26−19)
15. INSTALL BRAKE MASTER CYLINDER SUB−ASSY
(SEE PAGE 27−4)
16. BLEED MASTER CYLINDER
SST 09023−00100
17. BLEED BRAKE LINE
(SEE PAGE 30−8)
18. BLEED CLUTCH PIPE LINE
(a) Fill the brake reservoir tank with clutch fluid and bleed clutch system.
Torque: 8.3 N·m (85 kgf·cm, 73 in.·lbf)
19. CHECK AND ADJUST BRAKE PEDAL HEIGHT
(SEE PAGE 30−29)
20. INSPECT AND ADJUST CLUTCH PEDAL SUB−ASSY
(SEE PAGE 42−7)
21. CHECK BRAKE FLUID LEAKAGE
22. CHECK CLUTCH FLUID LEAKAGE
23. CHECK FLUID LEVEL IN RESERVOIR

CLUTCH RELEASE CYLINDER ASSY (From July, 2003)

42027−05

OVERHAUL

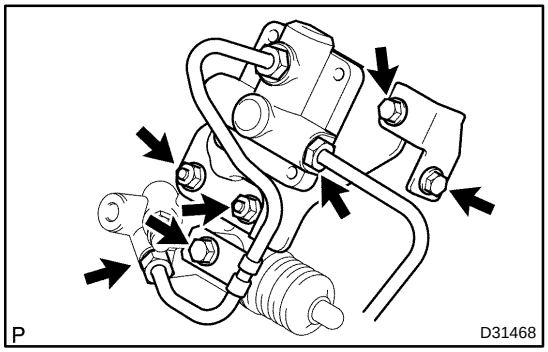

1. DISCONNECT CLUTCH RELEASE CYLINDER TO FLEXIBLE HOSE TUBE

(a) Remove the bolt and separate the tube clamp bracket.

(b) Using SST, disconnect the 2 flexible hose tubes.
SST 09023−00101

HINT:

Use a container to catch the fluid.

2. REMOVE CLUTCH ACCUMULATOR ASSY

(a) Remove the 2 bolts and flexible hose bracket No.2.

(b) Remove the 2 nuts and the clutch accumulator assy.

3. REMOVE CLUTCH RELEASE CYLINDER ASSY

(a) Remove the 2 bolts and clutch release cylinder assy.

4. REMOVE CLUTCH RELEASE CYLINDER KIT

(a) Remove the boot from the cylinder body.

(b) Remove the push rod from the cylinder body.

(c) Remove the piston from the cylinder body.

NOTICE:

Be careful not to damage the inside of the cylinder body.

(d) Remove the spring from the cylinder body.

(e) Remove the bleeder plug cap from the bleeder plug.

5. REMOVE RELEASE CYLINDER BLEEDER PLUG

6. INSTALL RELEASE CYLINDER BLEEDER PLUG
Torque: 8.3 N·m (85 kgf·cm, 73 in.·lbf)

7. INSTALL CLUTCH RELEASE CYLINDER KIT

(a) Install the bleeder plug cap to the bleeder plug.

(b) Install a new spring to the cylinder body.

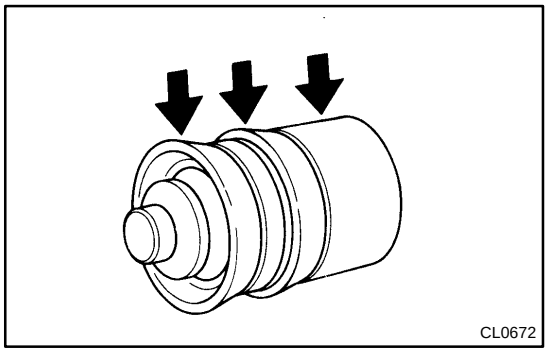

(c) Coat the piston with lithium soap base glycol grease, as shown in the illustration.

(d) Install the piston to the cylinder body.

NOTICE:

Be careful not to damage the inside of the cylinder body.

(e) Install the push rod to the cylinder body.

(f) Install the boot to the cylinder body.

8. INSTALL CLUTCH RELEASE CYLINDER ASSY

(a) Install the clutch release cylinder assy with the 2 bolts.
Torque: 12 N·m (120 kgf·cm, 9 ft·lbf)

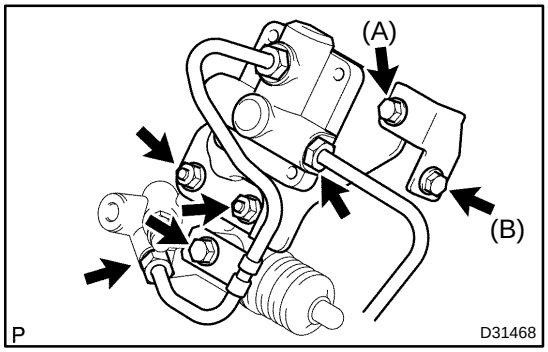

9. INSTALL CLUTCH ACCUMULATOR ASSY

(a) Install the clutch accumulator assy with the 2 nuts and the bolt.
Torque: 12 N·m (120 kgf·cm, 9 ft·lbf)

(b) Install the flexible hose bracket No.2 with the 2 bolts.
Torque:
Bolt A: 12 N·m (120 kgf·cm, 9 ft·lbf)
Bolt B: 39 N·m (398 kgf·cm, 29 ft·lbf)

10. CONNECT CLUTCH RELEASE CYLINDER TO FLEXIBLE HOSE TUBE

(a) Using SST, connect the 2 flexible hose tubes.
SST 09023−00101
Torque: 15 N·m (155 kgf·cm, 11 ft·lbf)

(b) Install the tube clamp bracket with the bolt.
Torque: 12 N·m (120 kgf·cm, 9 ft·lbf)

11. BLEED CLUTCH PIPE LINE

(a) Fill the brake reservoir tank with clutch fluid and bleed the clutch system.
Torque: 8.3 N·m (85 kgf·cm, 73 in.·lbf)

12. CHECK CLUTCH FLUID LEAKAGE

13. CHECK FLUID LEVEL IN RESERVOIR

CLUTCH ACCUMULATOR ASSY (From July, 2003)

4207K−02

REPLACEMENT

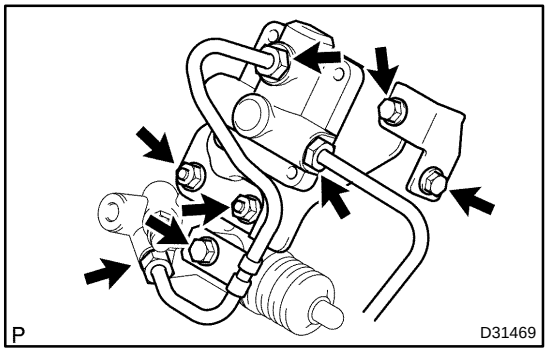

1. DISCONNECT CLUTCH RELEASE CYLINDER TO FLEXIBLE HOSE TUBE

(a) Remove the bolt and separate the tube clamp bracket.

(b) Using SST, disconnect the 3 flexible hose tubes.
SST 09023−00101

HINT:
Use a container to catch the fluid.

2. REMOVE CLUTCH ACCUMULATOR ASSY

(a) Remove the 2 bolts and flexible hose bracket No.2.

(b) Remove the 2 nuts and clutch accumulator assy.

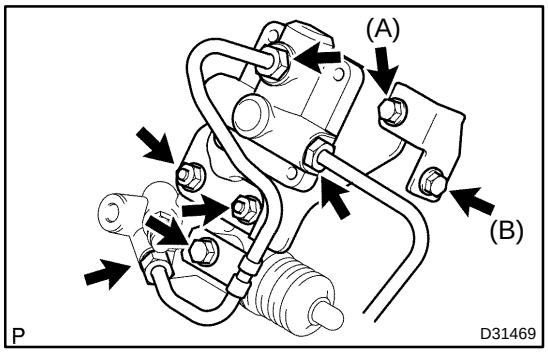

3. INSTALL CLUTCH ACCUMULATOR ASSY

(a) Install the clutch accumulator assy with the 2 nuts.
Torque: 12 N·m (120 kgf·cm, 9 ft·lbf)

(b) Install the flexible hose bracket No.2 with the 2 bolts.
Torque:
Bolt A: 12 N·m (120 kgf·cm, 9 ft·lbf)
Bolt B: 39 N·m (398 kgf·cm, 29 ft·lbf)

4. CONNECT CLUTCH RELEASE CYLINDER TO FLEXIBLE HOSE TUBE

(a) Using SST, connect the 3 flexible hose tubes to the clutch accumulator assy.
SST 09023−00101
Torque: 15 N·m (155 kgf·cm, 11 ft·lbf)

(b) Install the tube clamp bracket with the bolt.
Torque: 12 N·m (120 kgf·cm, 9 ft·lbf)

5. BLEED CLUTCH PIPE LINE

(a) Fill the brake reservoir tank with brake fluid and bleed the clutch system.
Torque: 8.3 N·m (85 kgf·cm, 73 ft·lbf)

6. CHECK CLUTCH FLUID LEAKAGE

7. CHECK FLUID LEVEL IN RESERVOIR

CLUTCH UNIT

4202F−03

OVERHAUL

1. REMOVE MANUAL TRANSAXLE ASSY
(SEE PAGE 41−11)

2. REMOVE CLUTCH RELEASE FORK BOOT

3. REMOVE CLUTCH RELEASE BEARING ASSY

4. REMOVE CLUTCH RELEASE FORK SUB−ASSY

5. REMOVE RELEASE BEARING HUB CLIP

6. REMOVE RELEASE FORK SUPPORT

(a) Remove the release fork support from the manual transaxle assy.

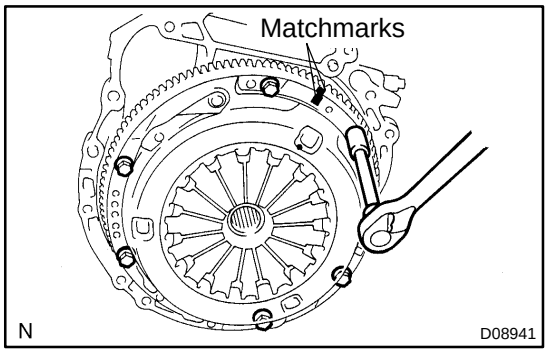

7. REMOVE CLUTCH COVER ASSY

(a) Place the matchmarks on the clutch cover assy with the one on the flywheel sub−assy.
(b) Loosen each set bolt one turn at a time until spring tension is released.
(c) Remove the set bolts and pull off the clutch cover assy.

NOTICE:
Do not drop the clutch disc assy.

8. REMOVE CLUTCH DISC ASSY

NOTICE:
Keep the lining part of the clutch disc assy, the pressure plate and surface of the flywheel sub−assy away from oil and foreign attachment.

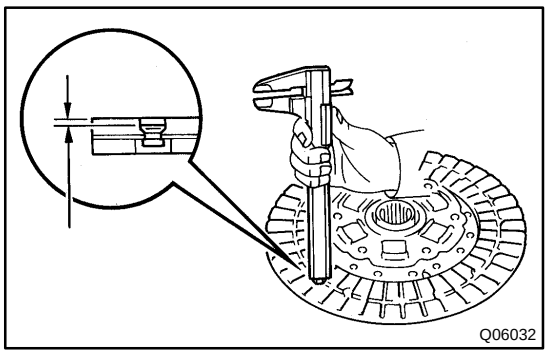

9. INSPECT CLUTCH DISC ASSY

(a) Using vernier calipers, measure the rivet head depth.
Maximum rivet depth: 0.3 mm (0.012 in.)

If necessary, replace the clutch disc assy.

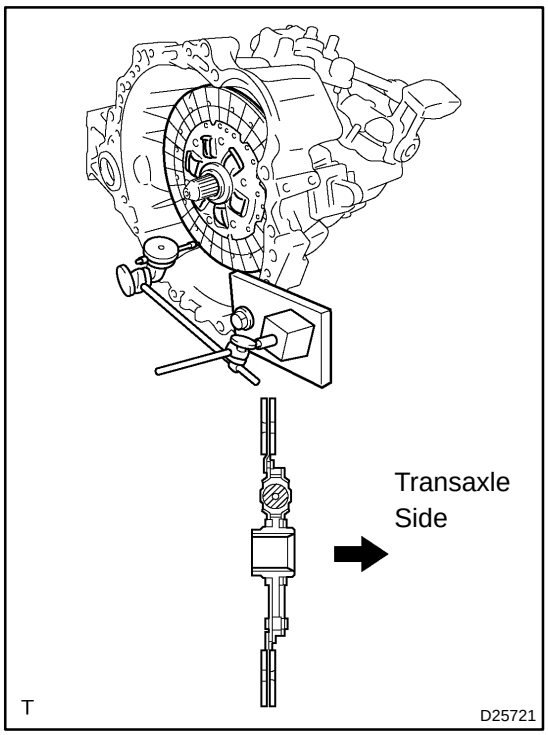

(b) Install the clutch disc assy to the transaxle assy.

NOTICE:

Take care not to insert the clutch disc assy in the wrong direction

(c) Using a dial indicator, check the clutch disc assy runout.

Minimum runout: 0.8 mm (0.031 in.)

If necessary, replace the clutch disc assy.

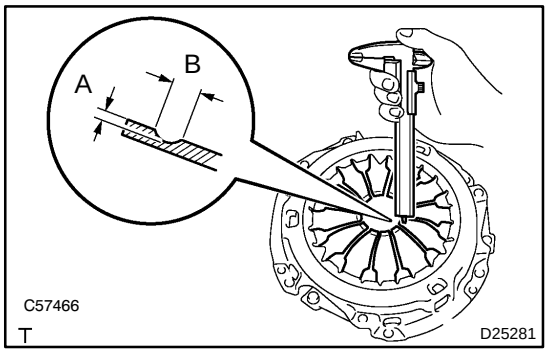

10. INSPECT CLUTCH COVER ASSY

(a) Using vernier calipers, inspect the diaphragm spring for depth and width of wear.

Maximum:

A (Depth): 0.5 mm (0.020 in.)

B (Width): 6.0 mm (0.236 in.)

If necessary, replace clutch cover assy.

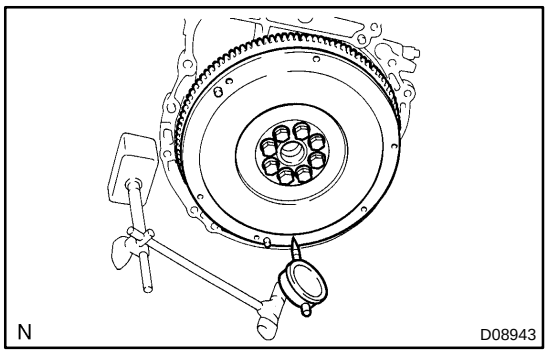

11. INSPECT FLYWHEEL SUB−ASSY

(a) Using a dial indicator, inspect the flywheel sub−assy run-out.

Maximum runout: 0.1 mm (0.004 in.)

If necessary, replace the flywheel sub−assy.

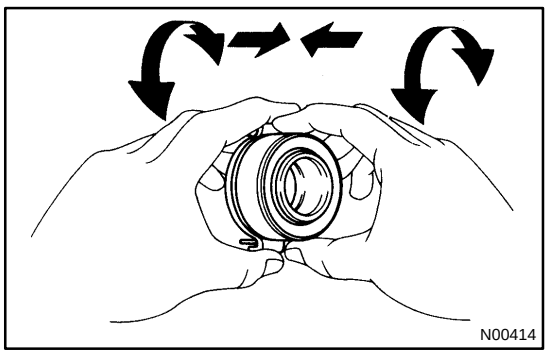

12. INSPECT CLUTCH RELEASE BEARING ASSY

(a) Turn the release bearing assy by hand while applying force in the axial direction.

HINT:

The bearing is permanently lubricated and required no cleaning or lubrication.

If necessary, replace the release bearing assy.

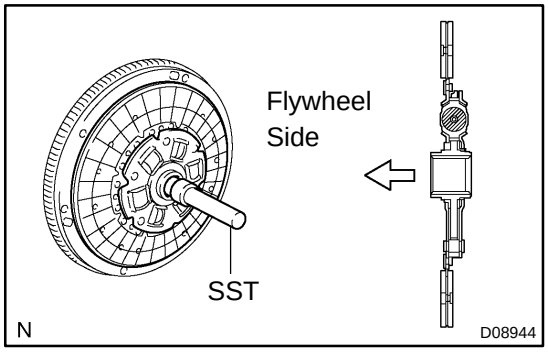

13. INSTALL CLUTCH DISC ASSY

(a) Insert SST in the clutch disc assy, then insert them in the flywheel sub−assy.
SST 09301−00220

NOTICE:
Take care not to insert clutch disc assy in the wrong direction.

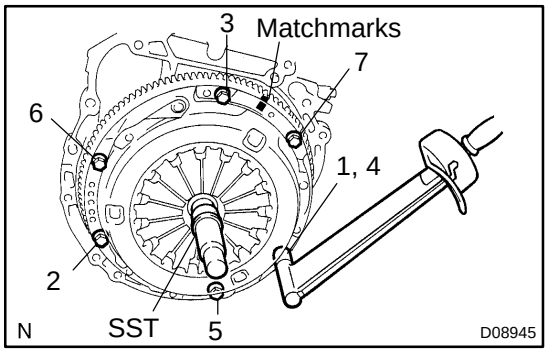

14. INSTALL CLUTCH COVER ASSY

(a) Align the matchmarks on the clutch cover assy and flywheel sub−assy.
(b) Following the procedures shown in the illustration, tighten the 6 bolts, in the order starting the bolt locating near the knock pin on the top.
Torque: 19 N·m (195 kgf·cm, 14 ft·lbf)

HINT:
- Following the order in the illustration, tighten the bolts at a time evenly.
- Move SST up and down, right and left lightly, after checking that the disc is in the center, tighten the bolts.

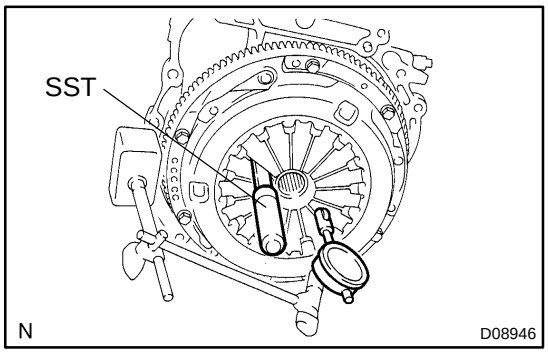

15. INSPECT AND ADJUST CLUTCH COVER ASSY

(a) Using a dial indicator with roller instrument, check the diaphragm spring tip alignment.
Maximum non−alignment: 0.5 mm (0.020 in.)

If alignment is not as specified, using SST, adjust the diaphragm spring tip alignment.
SST 09333−00013

16. INSTALL RELEASE FORK SUPPORT

(a) Install the release fork support to the manual transaxle assy.
Torque: 47 N·m (480 kgf·cm, 35 ft·lbf)

17. INSTALL RELEASE BEARING HUB CLIP

(a) Install the release bearing hub clip to the release bearing assy.

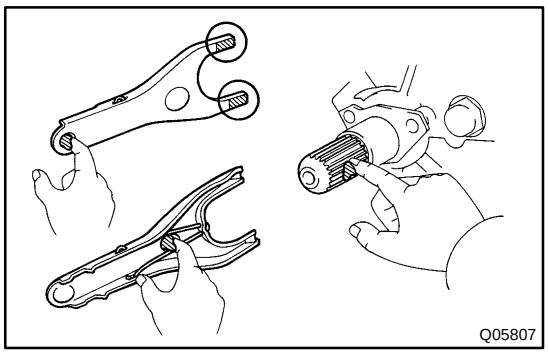

18. INSTALL CLUTCH RELEASE FORK SUB−ASSY

(a) Apply release hub grease to the release fork and release bearing assy contact, release fork and push rod contact and release fork pivot points.
Sealant:
Part No. 08887−01806, RELEASE HUB GREASE or equivalent

(b) Install the release fork to the release bearing assy.

19. INSTALL CLUTCH RELEASE BEARING ASSY

(a) Apply the clutch spline grease to the input shaft spline.
Sealant:
Part No. 08887−01706, CLUTCH SPLINE GREASE or equivalent

(b) Install the release fork with release bearing assy to the manual transaxle assy.

NOTICE:
After the installation, move the folk forward and backward to check that the release bearing slides smoothly.

20. INSTALL CLUTCH RELEASE FORK BOOT

21. INSTALL MANUAL TRANSAXLE ASSY
(SEE PAGE 41−11)

CLUTCH START SWITCH ASSY

ON−VEHICLE INSPECTION

42028−05

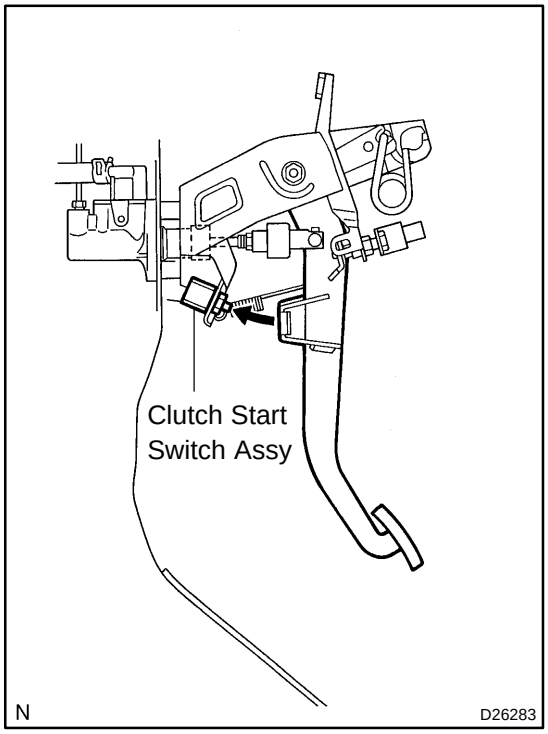

1. CHECK CLUTCH START SYSTEM

(a) Check that the engine does not start when the clutch pedal is released.

(b) Check that the engine starts when the clutch pedal is fully depressed.

If necessary, replace the clutch start switch assy.

42029−07

INSPECTION

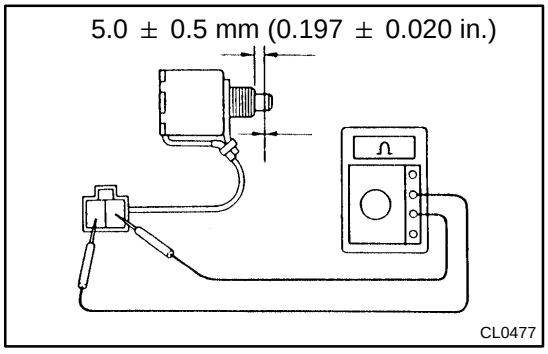

1. INSPECT CLUTCH START SWITCH ASSY

(a) Check the continuity between terminals when the switch is ON and OFF.

Switch position	Condition
ON (pushed)	Continuity
OFF (free)	No continuity

4202A−03

REPLACEMENT

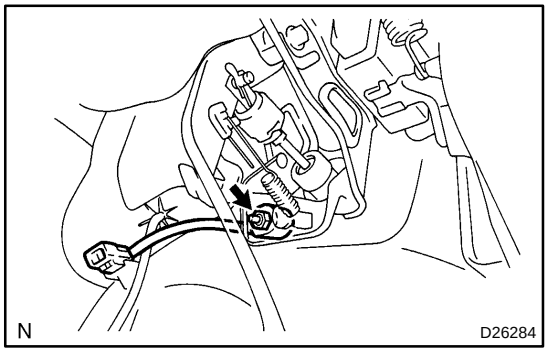

1. REMOVE CLUTCH START SWITCH ASSY

(a) Disconnect the clutch start switch assy connector.
(b) Remove the nut and clutch start switch assy from the clutch pedal support.

2. INSTALL CLUTCH START SWITCH ASSY

(a) Install the clutch start switch assy with the nut.
Torque: 16 N·m (160 kgf·cm, 12 ft·lbf)
(b) Connect the clutch start switch assy connector.

3. INSPECT CLUTCH START SWITCH ASSY
(SEE PAGE 42−19)

STEERING

5000O−05

PRECAUTION

1. HANDLING PRECAUTIONS ON STEERING SYSTEM

(a) Care must be taken when replacing parts. Incorrect replacement may affect the performance of the steering system and result in a driving hazard.

2. HANDLING PRECAUTIONS ON SRS AIRBAG SYSTEM

(a) The CAMRY is equipped with SRS (Supplemental Restraint System) such as the driver airbag and front passenger airbag. Failure to carry out service operation in the correct sequence could cause the SRS to unexpectedly deploy during servicing, possibly leading to a serious accident. Before servicing (including removal or installation of parts, inspection or replacement), be sure to read the precautionary notice for the supplemental restraint system (See page 60−1).

5002P−17

PROBLEM SYMPTOMS TABLE

Use the table below to help you find the cause of the problem. The numbers indicate the priority of the likely cause of the problem. Check each part in the order shown. If necessary, repair or replace these parts.

Symptom	Suspect Area	See page
Hard steering	1. Tires (Improperly inflated)	28−1
	2. Power steering fluid level (Low)	51−3
	3. Drive belt (Loose)	14−5 14−140
	4. Front wheel alignment (Incorrect)	26−5
	5. Steering system joints (Worn)	−
	6. Suspension arm ball joints (Worn)	26−19
	7. Steering column (Binding)	−
	8. Power steering vane pump	51−8 51−17
	9. Power steering gear	51−28
Poor return	1. Tires (Improperly inflated)	28−1
	2. Front wheel alignment (Incorrect)	26−5
	3. Steering column (Binding)	−
	4. Power steering gear	51−28
Excessive play	1. Steering system joints (Worn)	−
	2. Suspension arm ball joints (Worn)	26−19
	3. Intermediate shaft, Sliding yoke (Worn)	−
	4. Front wheel bearing (Worn)	30−23
	5. Power steering gear	51−28
Abnormal noise	1. Power steering fluid level (Low)	51−3
	2. Steering system joints (Worn)	−
	3. Power steering vane pump	51−8 51−17
	4. Power steering gear	51−28

5000P−07

ON−VEHICLE INSPECTION

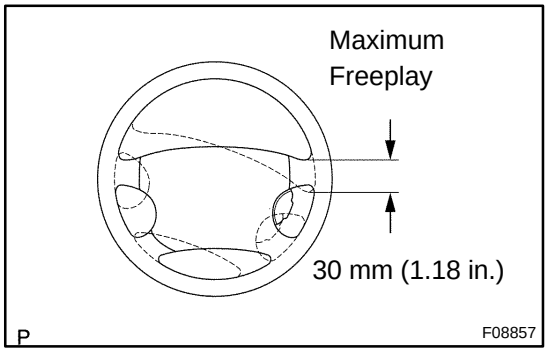

1. CHECK STEERING WHEEL FREEPLAY

(a) Stop the vehicle and face the tires straight ahead.

(b) Rock the steering wheel gently up and down by your hand, check the steering wheel freeplay.

Maximum freeplay: 30 mm (1.18 in.)

5002Q−04

REPAIR

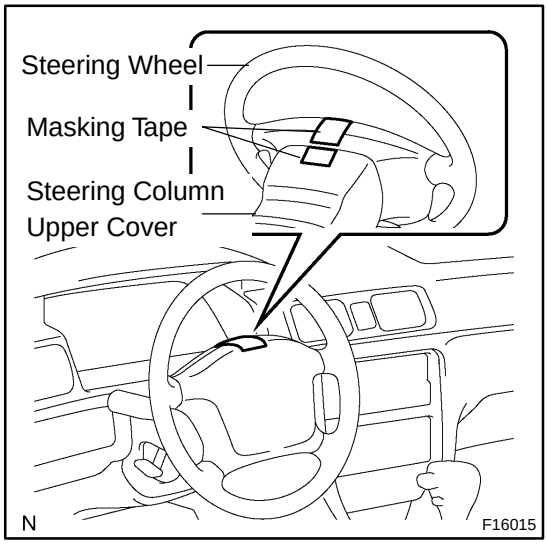

1. STEERING OFF CENTER REPAIR PROCEDURE

(a) Inspect steering wheel off center.

(1) Apply masking tape on the top center of the steering wheel and steering column upper cover.

(2) Drive the vehicle in a straight line for 100 meters at a constant speed of 35 mph (56 km/h), and hold the steering wheel to maintain the course.

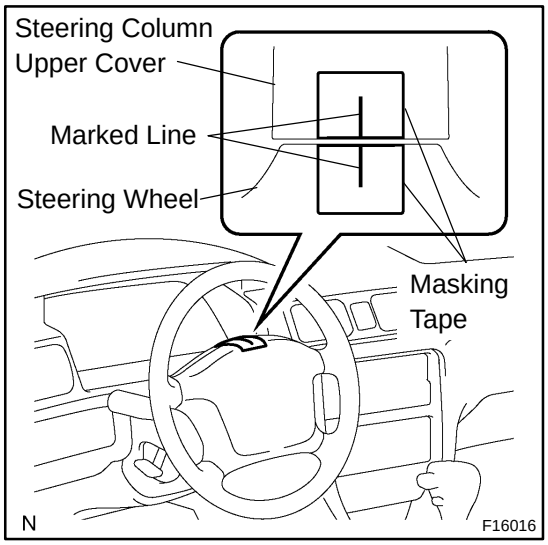

(3) Draw a line on the masking tape as shown in the illustration.

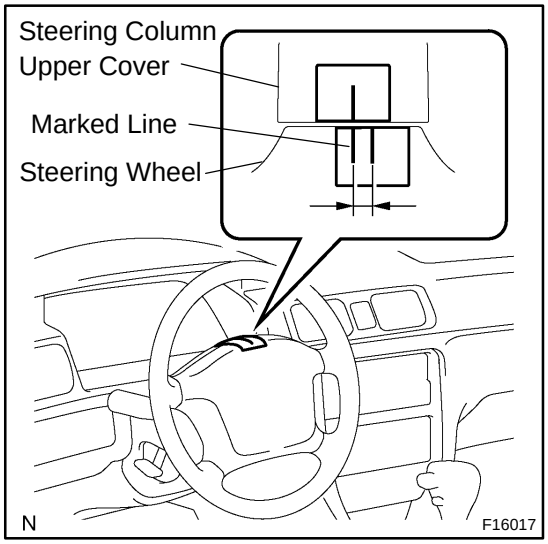

(4) Turn the steering wheel to its straight position.

HINT:

Refer to the upper surface of the steering wheel, steering spoke and SRS airbag line for the straight position.

(5) Draw a new line on the masking tape or the steering wheel as shown in the illustration.

(6) Measure the distance between the 2 lines on the masking tape of the steering wheel.

(7) Convert the measured distance to steering angle.
Measured distance 1 mm (0.04 in.) = Steering angle approximately 1 deg.

HINT:
Make a note of the steering angle.

(b) Adjust steering angle.

NOTICE:
The adjustment method for steering angle is different depending on the models. Check whether it is type A or B.

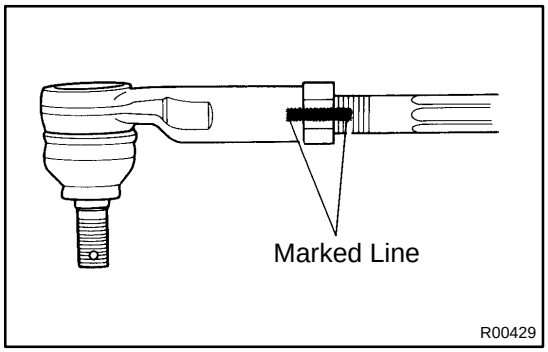

(1) Draw a line on the RH and LH tie rod and rack ends where it can easily be seen.
(2) Using a paper gauge, measure the distance from RH and LH tie rod ends to the rack end screws.

HINT:
- Measure the RH side and LH side.
- Make a note of the measured values.

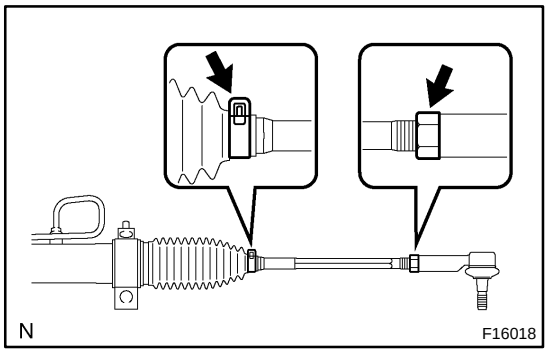

(3) Remove the RH and LH boot clips from the rack boots.
(4) Loosen the RH and LH lock nuts.
(5) Turn the RH and LH rack end by the same amount (but in different directions) according to the steering angle.
1 turn 360 deg. of rack end (1.5 mm (0.059 in.) horizontal movement) − 12 deg. of steering angle.
(6) Tighten the RH and LH lock nuts by the specified torque.
Torque: 74 N·m (750 kgf·cm, 54 ft·lbf)

NOTICE:
Make sure that the difference in length between RH and LH tie rod ends and rack end screws are within 1.5 mm (0.059 in.).

(7) Install the RH and LH boot clips.

STEERING COLUMN

COMPONENTS

5002R−02

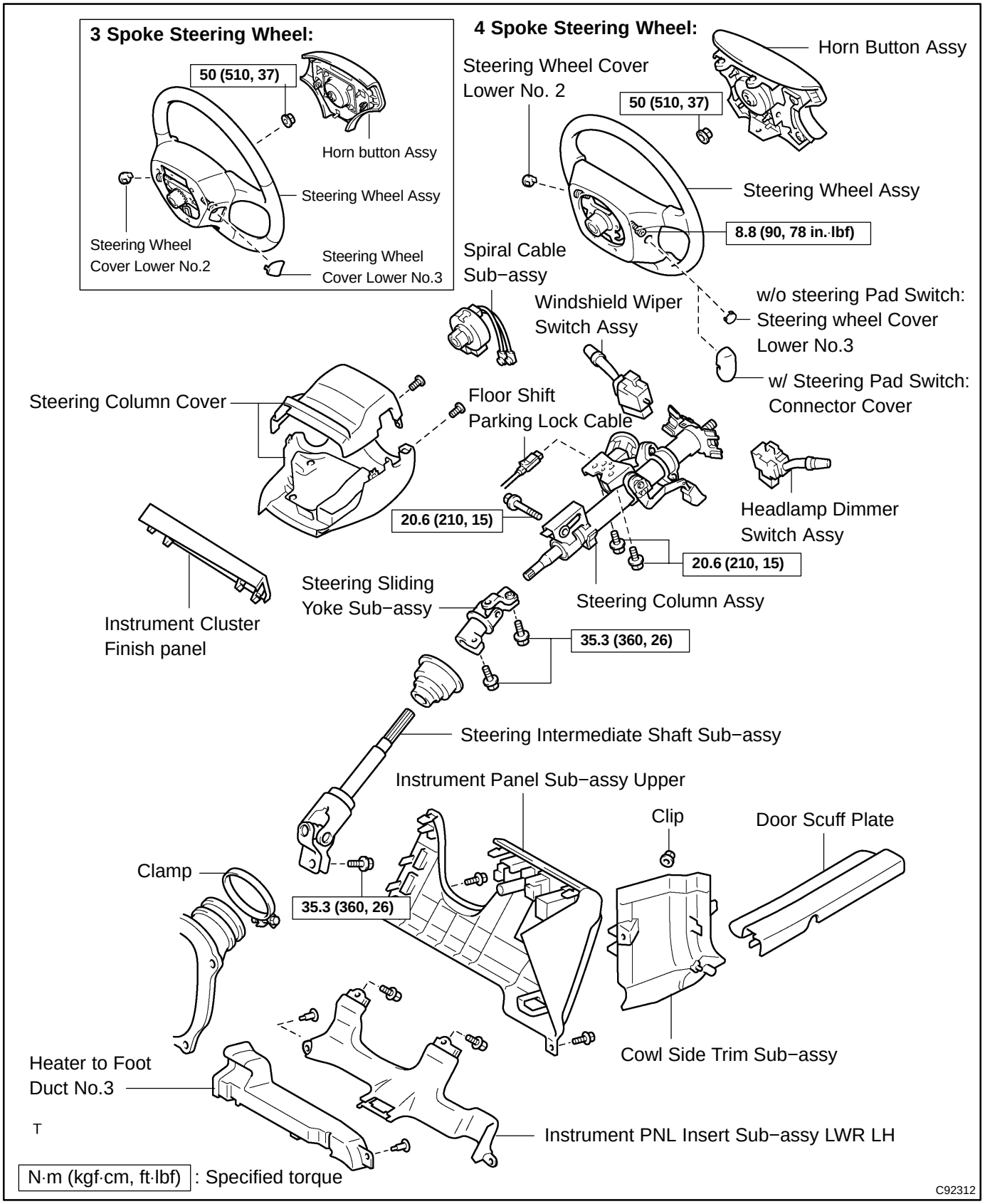

TMC Made:

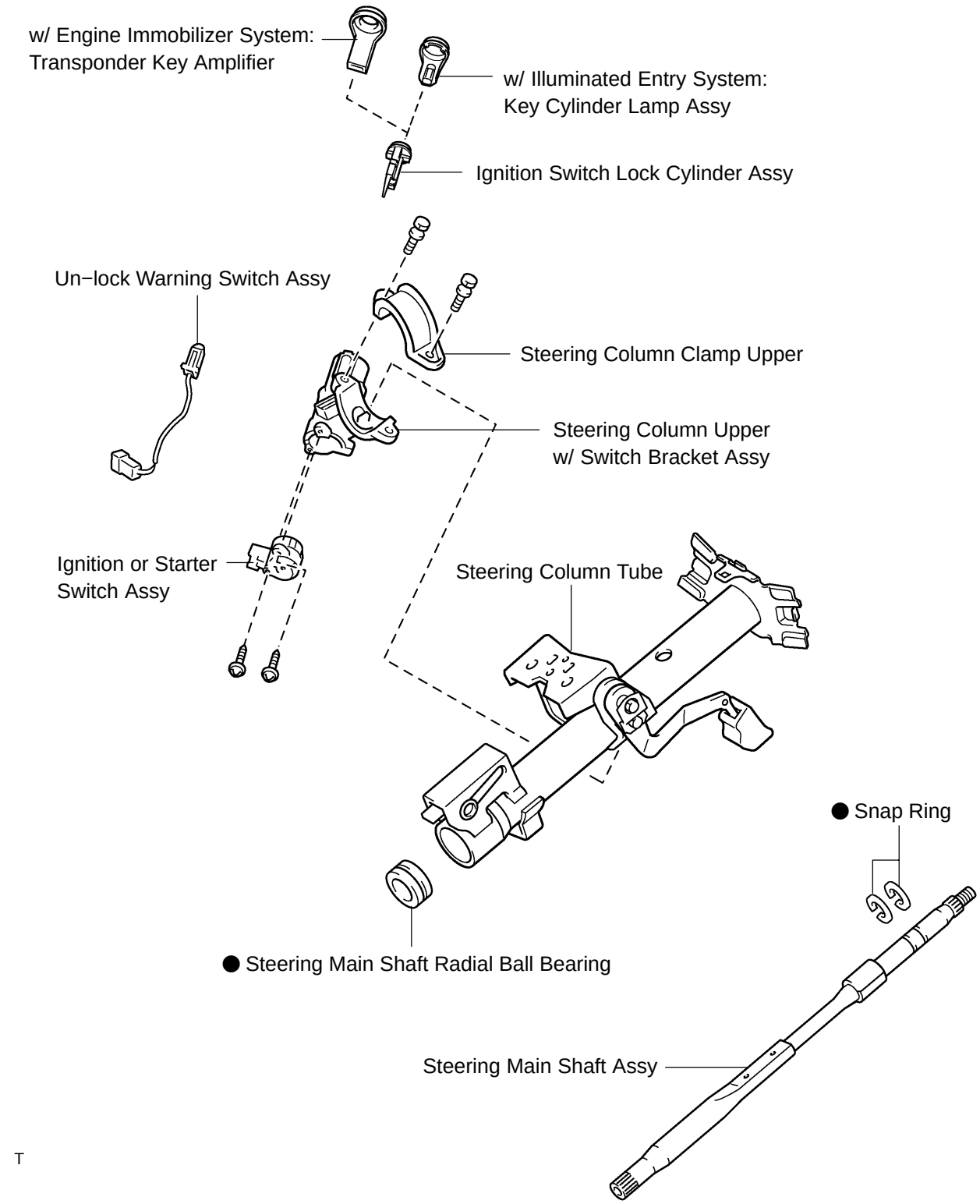

T

● Non−reusable part

C92313

TMMK Made:

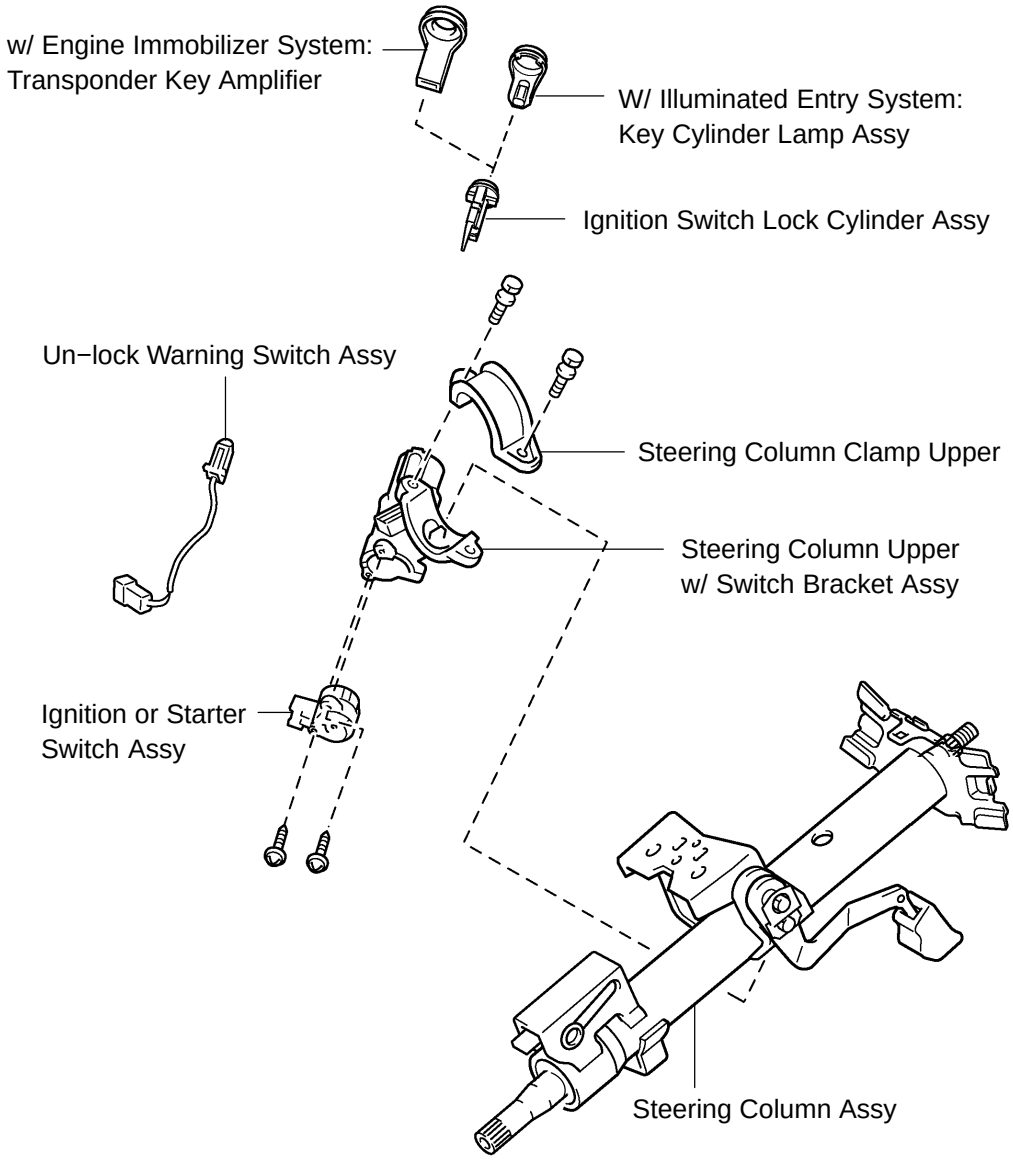

T

C92612

STEERING COLUMN ASSY (TMC MADE)

5002S−05

OVERHAUL

1. PRECAUTION(See page 60−1)
2. DISCONNECT BATTERY NEGATIVE TERMINAL
3. REMOVE STEERING WHEEL COVER LOWER NO.2(See page 60−25)
4. REMOVE STEERING WHEEL COVER LOWER NO.3 (W/O STEERING PAD SWITCH 4 SPOKE STEERING WHEEL)(See page 60−25)
5. REMOVE CONNECTOR COVER (W/ STEERING PAD SWITCH 4 SPOKE STEERING WHEEL)(See page 60−25)
6. REMOVE STEERING WHEEL COVER LOWER NO.3 (3 SPOKE STEERING WHEEL ASSY)(See page 60−25)
7. INSPECT PLACE FRONT WHEELS FACING STRAIGHT AHEAD

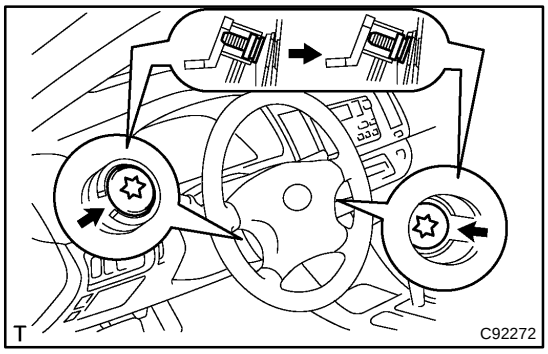

8. REMOVE HORN BUTTON ASSY

NOTICE:

If the airbag connector is disconnected with the ignition switch being at ON, DTCs will be recorded.

(a) Using a torx® socket wrench, loosen the 2 torx® screws until the groove along the screw circumference catches on the screw case.

(b) Pull out the horn button assy from the steering wheel.

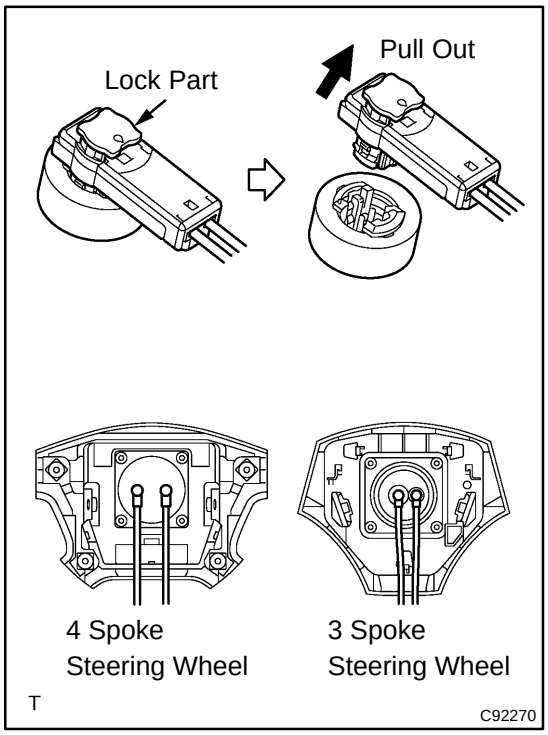

(c) Using a screwdriver, release the lock part of each airbag connector and disconnect the 2 airbag connectors.

(d) Disconnect the horn connector. (4 Spoke steering wheel)

NOTICE:

When removing the horn button assy, take care not to pull the airbag wire harness.

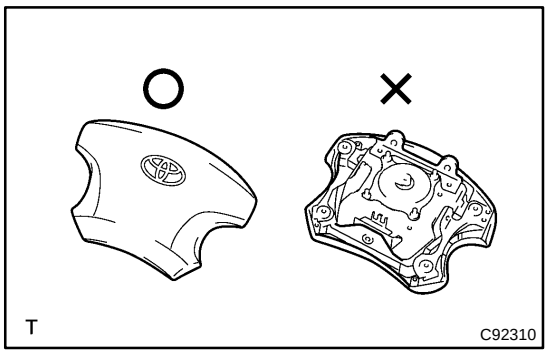

CAUTION:

- **When storing the horn button assy, keep the upper surface of the horn button assy facing upward.**
- **Never disassemble the horn button assy.**

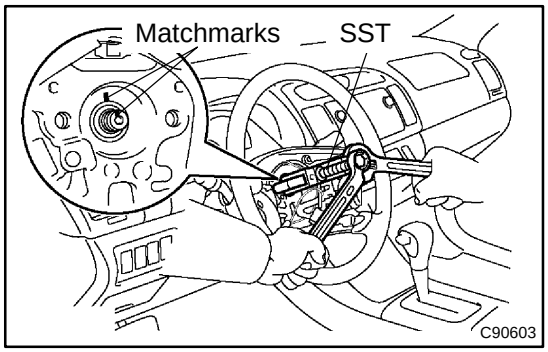

9. REMOVE STEERING WHEEL ASSY

(a) Disconnect the connector.

(b) Remove the steering wheel assy set nut.

(c) Place matchmarks on the steering wheel assy and main shaft assy.

(d) Using SST, remove the steering wheel assy.

SST 09950−50013 (09951−05010, 09952−05010, 09953−05020, 09954−05021)

10. REMOVE INSTRUMENT CLUSTER FINISH PANEL(See page 71−16)

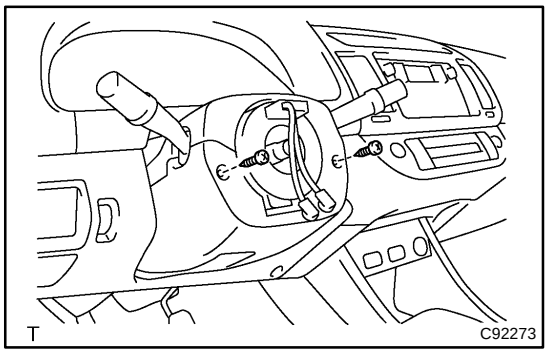

11. REMOVE STEERING COLUMN COVER

(a) Remove the 2 screws and steering column cover.

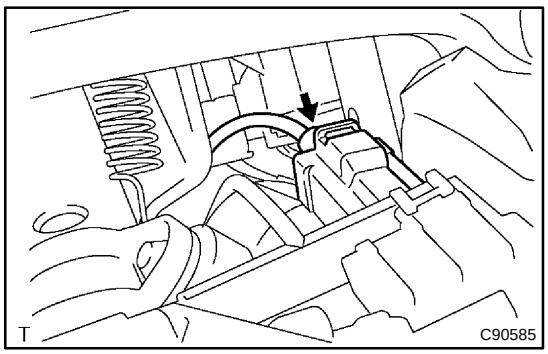

12. DISCONNECT FLOOR SHIFT PARKING LOCK CABLE ASSY

(a) Using a screwdriver, disconnect the floor shift parking lock cable from the upper bracket.

13. REMOVE SPIRAL CABLE SUB−ASSY(See page 60−34)

14. REMOVE HEADLAMP DIMMER SWITCH ASSY

(a) Disconnect the connector and remove the headlamp dimmer switch assy.

15. REMOVE WINDSHIELD WIPER SWITCH ASSY

(a) Disconnect the connector and remove the windshield wiper switch assy.

16. **REMOVE FRONT DOOR SCUFF PLATE LH(See page 71−16)**
17. **REMOVE COWL SIDE TRIM SUB−ASSY LH(See page 71−16)**
18. **REMOVE INSTRUMENT PANEL COIN BOX SUB−ASSY(See page 71−16)**
19. **REMOVE INSTRUMENT PANEL SUB−ASSY UPPER(See page 71−16)**
20. **REMOVE INSTRUMENT PNL INSERT SUB−ASSY LWR LH(See page 71−16)**
21. **REMOVE HEATER TO FOOT DUCT NO.3(See page 71−16)**

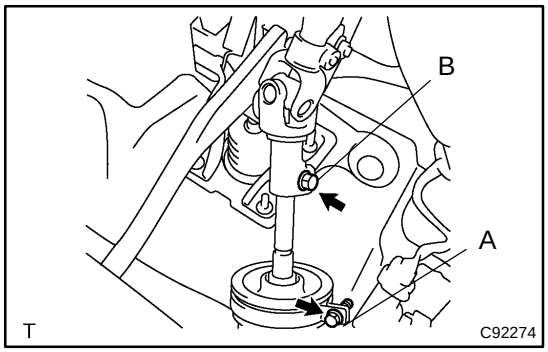

22. **DISCONNECT STEERING INTERMEDIATE SHAFT SUB−ASSY**

(a) Loosen the bolt A and remove the clamp from the steering column hole cover No.1.

(b) Separate the steering column hole cover No.2 from the steering column hole cover No.1.

(c) Loosen the bolt B.

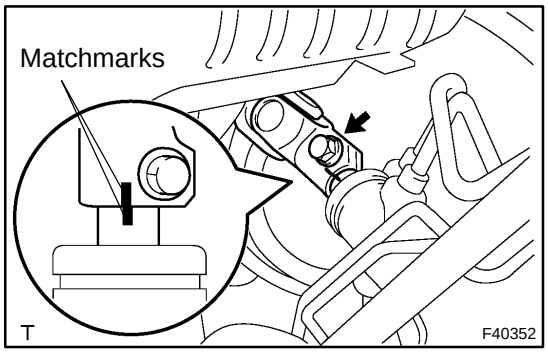

(d) Place matchmarks on the steering intermediate shaft sub−assy and steering gear assy.

(e) Remove the bolt and disconnect the steering intermediate shaft sub−assy.

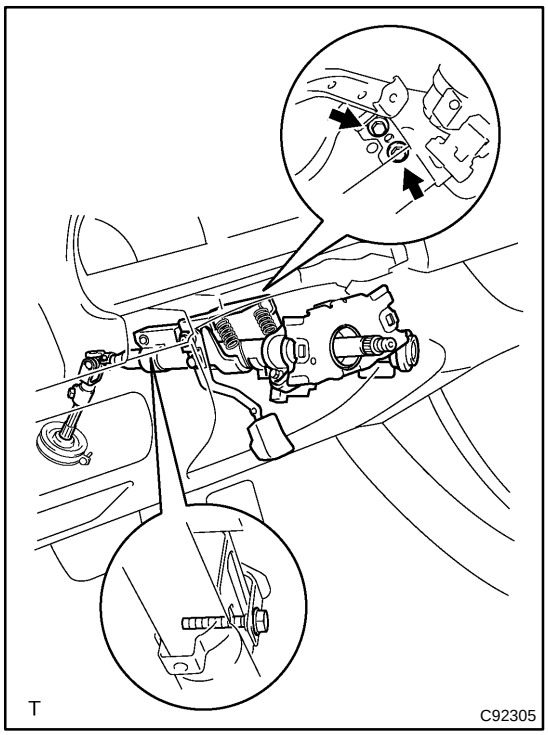

23. **REMOVE STEERING COLUMN ASSY**

(a) Disconnect the connectors and wire harness clamps from the steering column assy.

(b) Remove the 3 bolts and steering column assy.

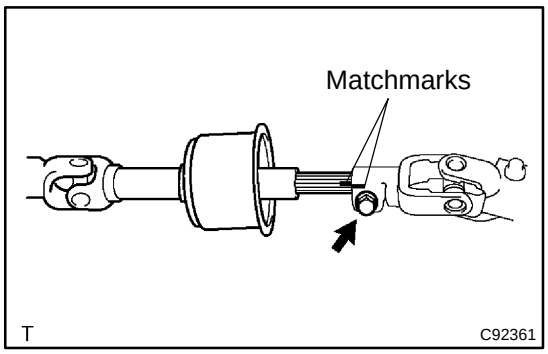

24. REMOVE STEERING INTERMEDIATE SHAFT SUB−ASSY

(a) Place matchmarks on the steering intermediate shaft sub−assy and steering sliding yoke sub−assy.

(b) Remove the bolt and steering intermediate shaft sub−assy.

25. REMOVE STEERING COLUMN HOLE COVER SUB−ASSY NO.2

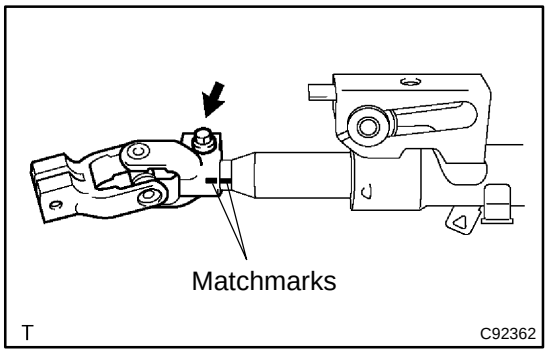

26. REMOVE STEERING SLIDING YOKE SUB−ASSY

(a) Place matchmarks on the steering sliding yoke sub−assy and steering main shaft assy.

(b) Remove the bolt and steering sliding yoke sub−assy from the steering main shaft assy.

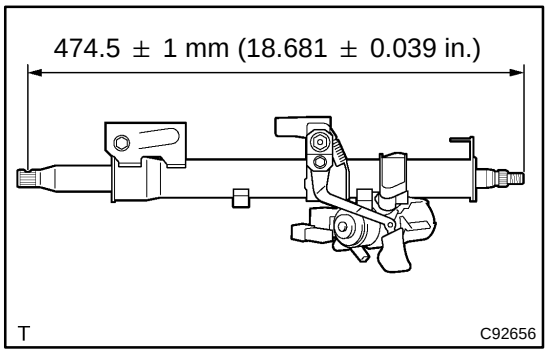

27. INSPECT STEERING COLUMN ASSY

(a) Measure the length of steering main shaft.
Standard length: 474.5 ± 1 mm (18.681 ± 0.039 in.)

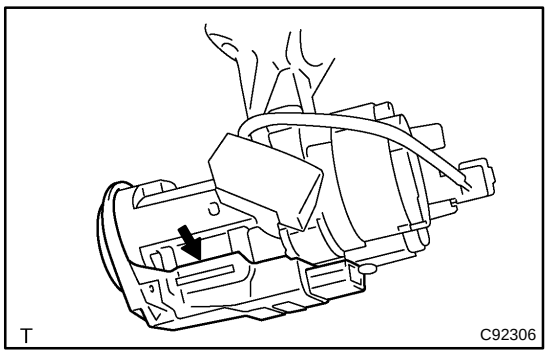

28. REMOVE TRANSPONDER KEY AMPLIFIER (W/ ENGINE IMMOBILISER SYSTEM)

(a) Disengage the claw hung on the upper bracket with a screwdriver.

(b) Pull the transponder key amplifier toward the rear of the vehicle with the claw open.

NOTICE:
Take care not to apply excessive force to prevent the case from being damaged.

29. REMOVE KEY CYLINDER LAMP ASSY (W/ ILLUMINATED ENTRY SYSTEM)

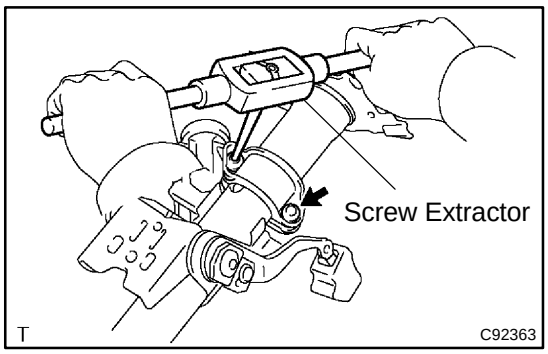

30. REMOVE STEERING COLUMN UPPER W/SWITCH BRACKET ASSY

(a) Using a centering punch, mark the center of the 2 lapered−head bolts.

(b) Using a 3 − 4 mm (0.12 − 0.16 in.) drill, drill into the 2 bolts.

(c) Using a screw extractor, remove the 2 bolts and steering column upper w/ switch bracket assy.

31. REMOVE STEERING COLUMN CLAMP UPPER

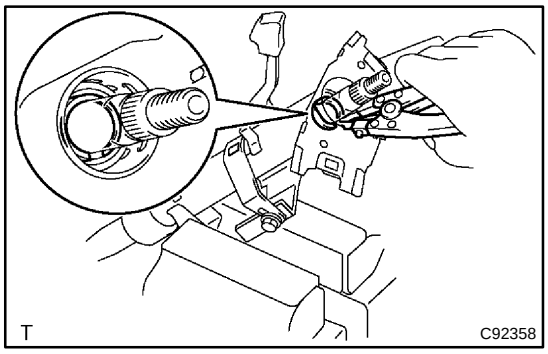

32. REMOVE STEERING MAIN SHAFT ASSY

(a) Using a snap ring expander, remove the steering main shaft snap ring (outer side).

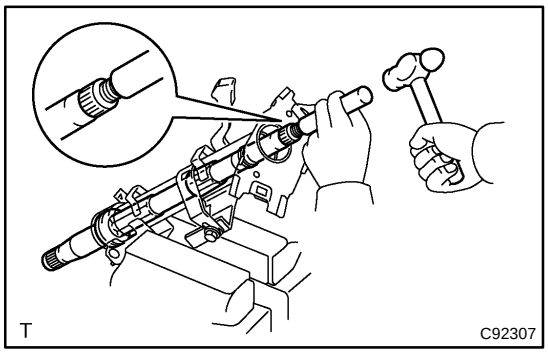

(b) Using a brass bar and a hammer, remove the steering main shaft assy and steering main shaft radial ball bearing.

NOTICE:

Be careful not to drop the steering main shaft assy.

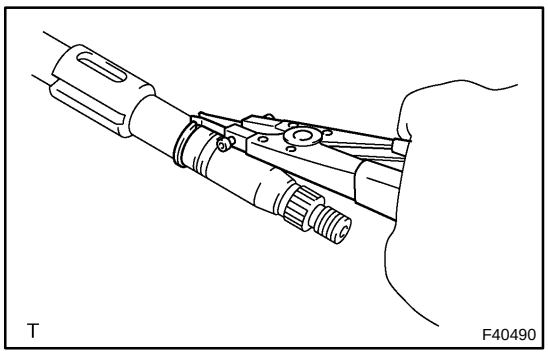

(c) Using a snap ring expander, remove the steering main shaft snap ring (inner side).

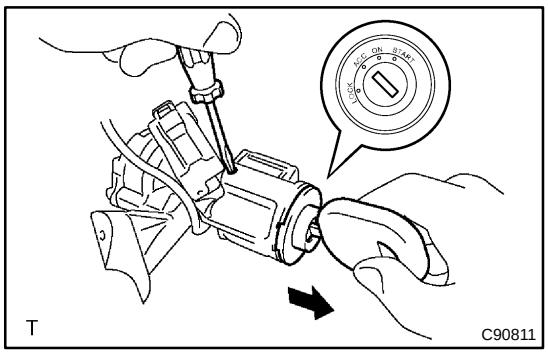

33. REMOVE IGNITION SWITCH LOCK CYLINDER ASSY

(a) Place the ignition switch lock cylinder assy at the ACC position.

(b) Push down the stop pin with a screwdriver, and pull out the cylinder assy.

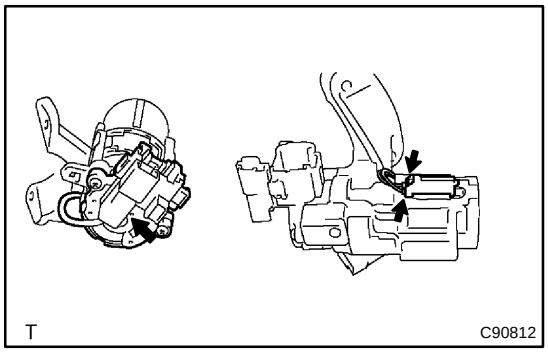

34. REMOVE UN−LOCK WARNING SWITCH ASSY

(a) Disconnect the un−lock warning switch assy connector from the ignition or starter switch assy.

(b) Remove the un−lock warning switch assy.

35. REMOVE IGNITION OR STARTER SWITCH ASSY

(a) Remove the 2 screws and ignition or starter switch assy from the steering column bracket assy.

36. INSTALL IGNITION OR STARTER SWITCH ASSY

(a) Install the ignition or starter switch assy to the steering column bracket assy with the 2 screws.

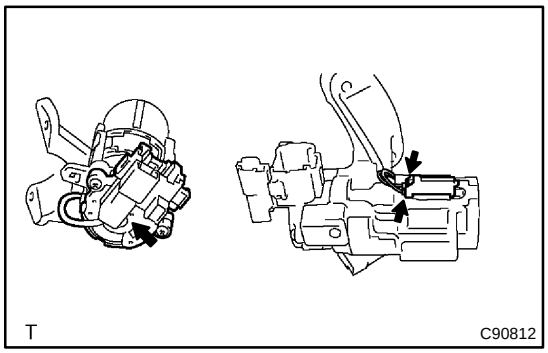

37. INSTALL UN−LOCK WARNING SWITCH ASSY

(a) Install the un−lock warning switch assy.

(b) Connect the un−lock warning switch assy connector to the ignition or starter switch assy.

38. INSTALL IGNITION SWITCH LOCK CYLINDER ASSY

(a) Make sure that the ignition switch lock cylinder assy is at the ACC position.

(b) Install the ignition switch lock cylinder assy.

39. INSPECT STEERING LOCK OPERATION

(a) Check that the steering lock mechanism is activated when removing the key.

(b) Check that the steering lock mechanism is deactivated when inserting the key and turning it to ACC position.

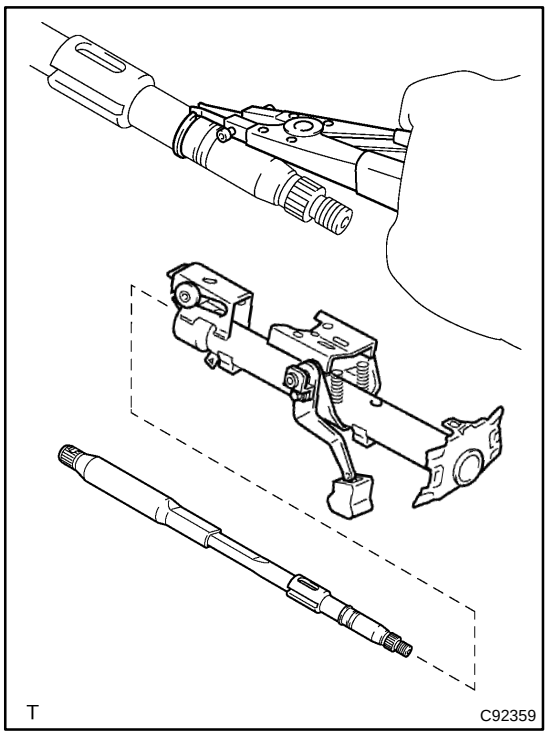

40. INSTALL STEERING MAIN SHAFT ASSY

(a) Using a snap ring expander, install a new steering main shaft snap ring (inner side) to the steering main shaft assy.

(b) Install the steering main shaft assy to the steering column tube.

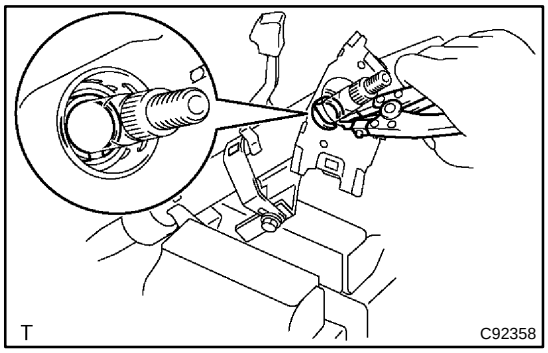

(c) Using a snap ring expander, install a new steering main shaft snap ring (outer side) to the steering main shaft assy.

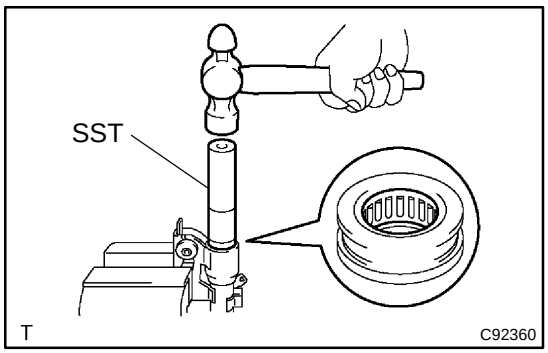

41. INSTALL STEERING MAIN SHAFT BEARING

(a) Using SST and a hammer, install a new steering main radial ball bearing.
SST 09608−06041

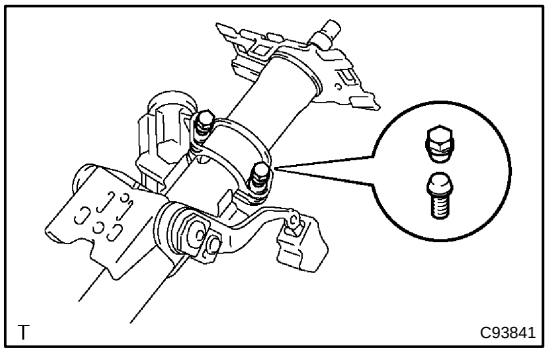

42. INSTALL STEERING COLUMN UPPER W/SWITCH BRACKET ASSY

(a) Temporarily install the steering column upper w/switch bracket assy and steering column upper clamp with 2 new tapered−head bolts.

(b) Tighten the 2 tapered−head bolts until the bolt heads break off.

43. INSTALL KEY CYLINDER LAMP ASSY (W/ ILLUMINATED ENTRY SYSTEM)

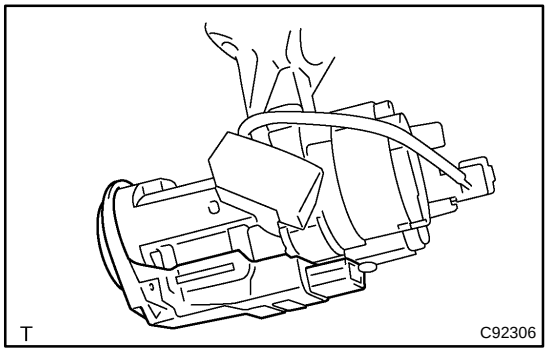

44. INSTALL TRANSPONDER KEY AMPLIFIER (W/ ENGINE IMMOBILISER SYSTEM)

(a) Align the transponder key amplifier with the installation position of the upper bracket with the amplifier inclined.

(b) Push the trasponder key amplifier up and connect it to the upper bracket.

NOTICE:

Take care not to push the amplifier up with excessive force to prevent it from being damaged.

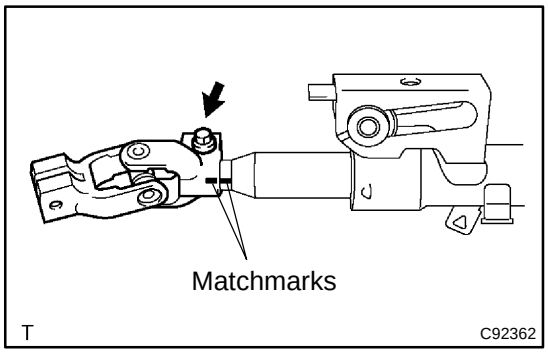

45. INSTALL STEERING SLIDING YOKE SUB−ASSY

(a) Align the matchmark with the one on the steering sliding yoke sub−assy and steering main shaft assy.

(b) Install the steering sliding yoke sub−assy with the bolt.

Torque: 35.3 N·m (360 kgf·cm, 26 ft·lbf)

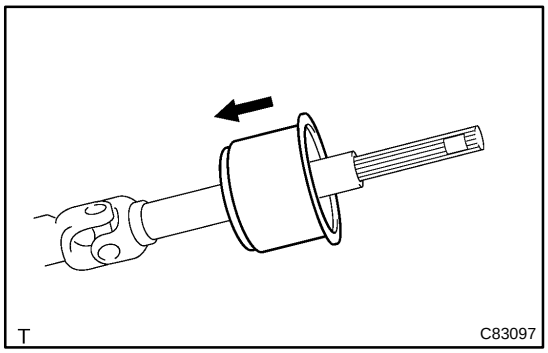

46. INSTALL STEERING COLUMN HOLE COVER SUB−ASSY NO.2

(a) Install the steering column hole cover sub−assy No.2 to the steering intermediate shaft sub−assy.

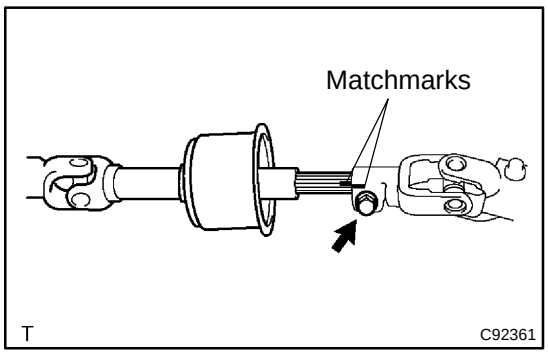

47. INSTALL STEERING INTERMEDIATE SHAFT SUB−ASSY

(a) Align the matchmark with the one on the steering intermediate shaft sub−assy and steering main shaft assy.

(b) Temporarily install the steering intermediate shaft sub−assy with the bolt.

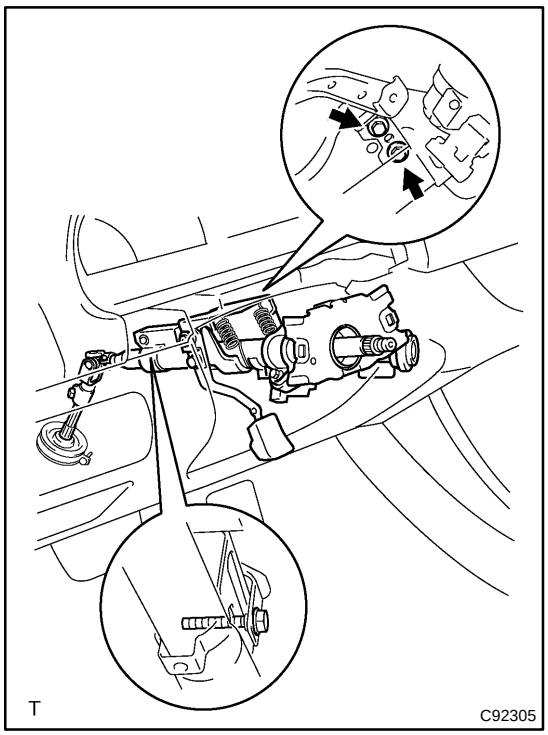

48. INSTALL STEERING COLUMN ASSY

(a) Install the steering column assy with the 3 bolts.
Torque: 20.6 N·m (210 kgf·cm, 15 ft·lbf)

(b) Connect the connectors and wire harness clamps.

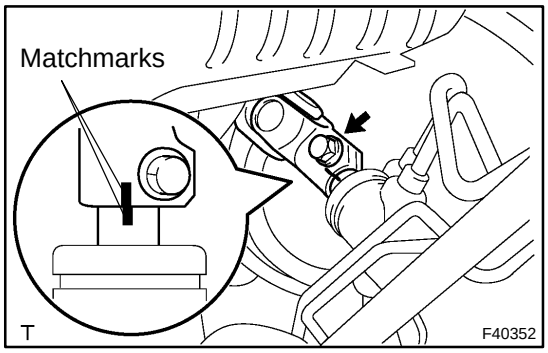

49. CONNECT STEERING INTERMEDIATE SHAFT SUB−ASSY

(a) Align the matchmarks on the intermediate shaft sub−assy and steering gear assy.

(b) Install the steering intermediate shaft sub−assy with the bolt.
Torque: 35.3 N·m (360 kgf·cm, 26 ft·lbf)

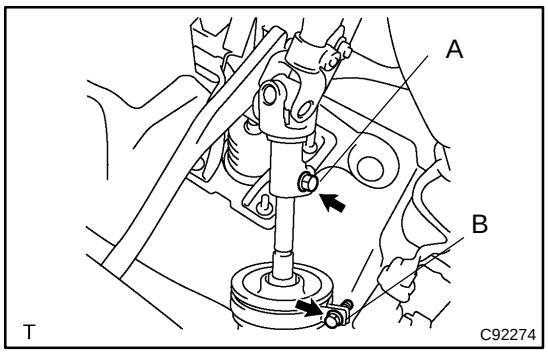

(c) Tighten the bolt A.
Torque: 35.3 N·m (360 kgf·cm, 26 ft·lbf)

(d) Install the steering column hole cover No. 2 to the steering hole cover No.1.

(e) Connect the clamp to the steering column hole cover No.1 and tighten the bolt B.

50. INSTALL WINDSHIELD WIPER SWITCH ASSY

(a) Install the windshield wiper switch assy and connect the connector.

51. INSTALL HEADLAMP DIMMER SWITCH ASSY

(a) Install the headlamp dimmer switch assy and connect the connector.

52. PLACE FRONT WHEELS FACING STRAIGHT AHEAD

53. INSTALL SPIRAL CABLE SUB−ASSY(See page 60−34)

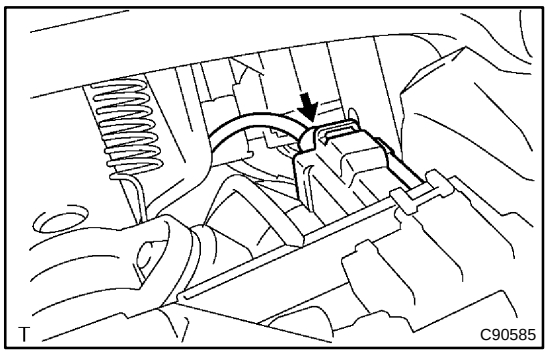

54. CONNECT FLOOR SHIFT PARKING LOCK CABLE ASSY

(a) Turn the ignition switch to ACC or ON.

(b) Connect the cable to the upper bracket.

55. CHECK KEY INTERLOCK OPERATION(See page 40−51)

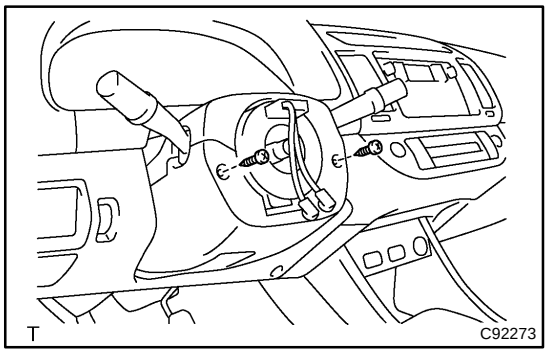

56. INSTALL STEERING COLUMN COVER

(a) Install the steering column cover with the 2 screws.

57. INSTALL INSTRUMENT CLUSTER FINISH PANEL

58. INSTALL HEATER TO FOOT DUCT NO.3

59. INSTALL INSTRUMENT PNL INSERT SUB−ASSY LWR LH

60. INSTALL INSTRUMENT PANEL SUB−ASSY UPPER

61. INSTALL INSTRUMENT PANEL COIN BOX SUB−ASSY

62. INSTALL COWL SIDE TRIM SUB−ASSY LH

63. INSTALL FRONT DOOR SCUFF PLATE LH

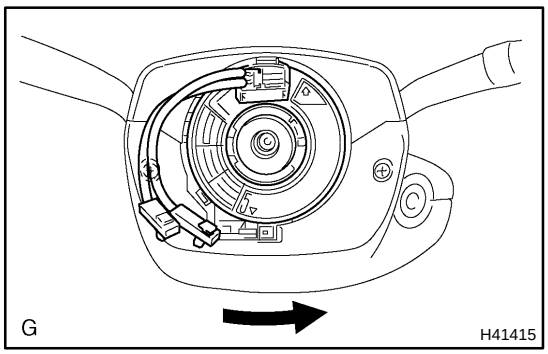

64. CENTER SPIRAL CABLE

(a) Check that the ignition switch is at OFF.

(b) Check that the battery negative terminal is disconnected.

NOTICE:

Do not start the operation for 90 seconds after removing the terminal.

(c) Turn the cable counterclockwise by hand until it becomes harder to turn.

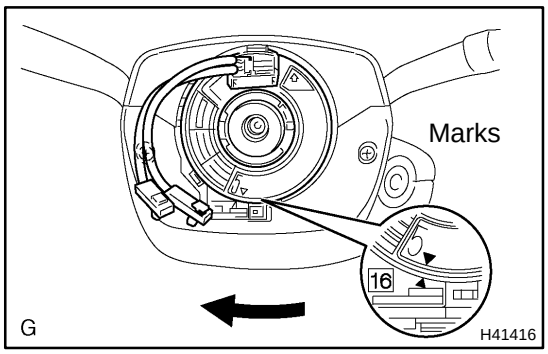

(d) Then rotate the cable clockwise about 2.5 turns to align the marks.

HINT:
The cable will rotate about 2.5 turns to both right and left of the center.

65. INSTALL STEERING WHEEL ASSY

(a) Align the matchmark with the one on the steering wheel assy and steering main shaft assy.

(b) Install the steering wheel assy with the set nut.
Torque: 50 N·m (510 kgf·cm, 37 ft·lbf)

(c) Connect the connector.

66. INSPECT HORN BUTTON ASSY(See page 60−25)

67. INSTALL HORN BUTTON ASSY

NOTICE:

- **Never use the airbag parts removed from another vehicle. When replacing parts, replace with new ones.**
- **Make sure that the horn button assy is installed with the specified torque.**
- **If the horn button assy has been dropped, or there are cracks, dents or other defects in the case or connector, replace the horn button assy with a new one.**
- **When installing the horn button assy, take care so that the wirings do not interfere with other parts and that they are not pinched between other parts.**

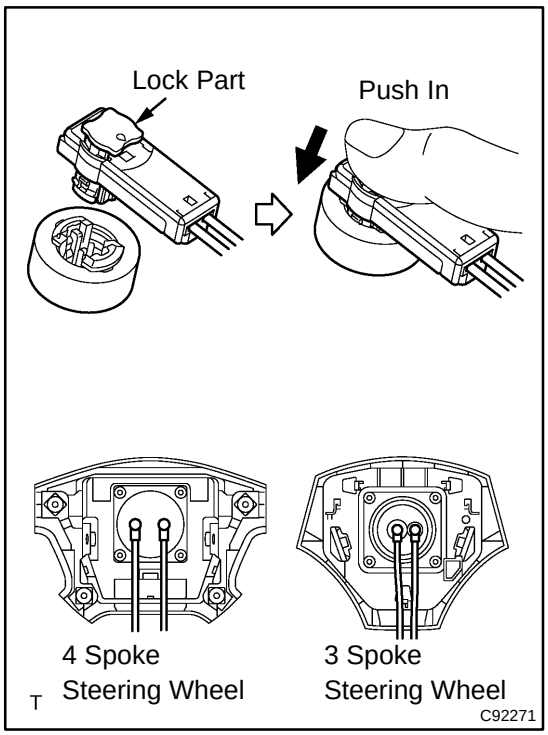

(a) Connect the 2 airbag connectors.
(b) Connect the horn connector. (4 Spoke steering wheel)

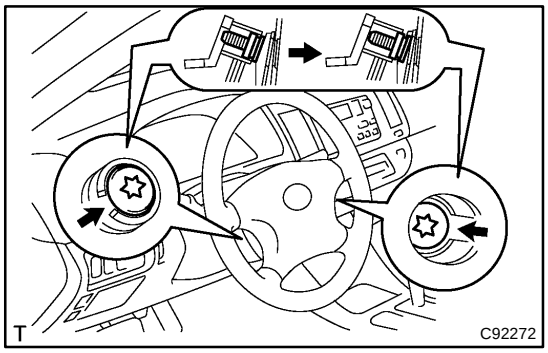

(c) Install the horn button assy after confirming that the circumference groove of the torx® screws is caught on the screw case.
(d) Using a torx® socket wrench, torque the 2 screws.
Torque: 8.8 N·m (90 kgf·cm, 78 in.·lbf)

68. INSTALL STEERING WHEEL COVER LOWER NO.2(See page 60−25)
69. INSTALL STEERING WHEEL COVER LOWER NO.3 (W/O STEERING PAD SWITCH 4 SPOKE STEERING WHEEL)(See page 60−25)
70. INSTALL CONNECTOR COVER (W/ STEERING PAD SWITCH 4 SPOKE STEERING WHEEL)(See page 60−25)
71. INSTALL STEERING WHEEL COVER LOWER NO.3 (3 SPOKE STEERING WHEEL ASSY)(See page 60−25)
72. INSPECT STEERING WHEEL CENTER POINT
73. INSPECT SRS WARNING LIGHT(See page 05−1456)

STEERING COLUMN ASSY (TMMK MADE)

5002T−06

OVERHAUL

1. PRECAUTION(See page 60−1)
2. SEPARATE BATTERY NEGATIVE TERMINAL
3. REMOVE STEERING WHEEL COVER LOWER NO.2(See page 60−25)
4. REMOVE STEERING WHEEL COVER LOWER NO.3 (W/O STEERING PAD SWITCH 4 SPOKE STEERING WHEEL)(See page 60−25)
5. REMOVE CONNECTOR COVER (W/ STEERING PAD SWITCH 4 SPOKE STEERING WHEEL)(See page 60−25)
6. REMOVE STEERING WHEEL COVER LOWER NO.3 (3 SPOKE STEERING WHEEL ASSY)(See page 60−25)
7. PLACE FRONT WHEELS FACING STRAIGHT AHEAD

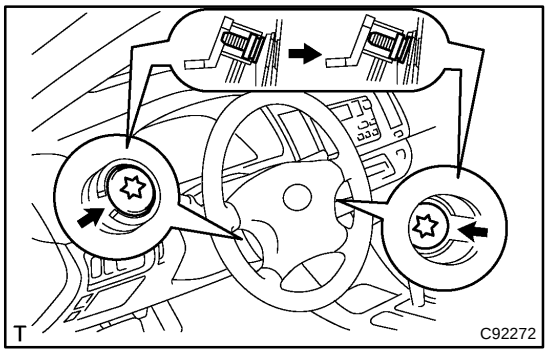

8. REMOVE HORN BUTTON ASSY

NOTICE:

If the airbag connector is disconnected with the ignition switch at ON, DTCs will be recorded.

(a) Using a torx® socket wrench, loosen the 2 torx® screws until the groove along the screw circumference catches on the screw case.

(b) Pull out the horn button assy from the steering wheel.

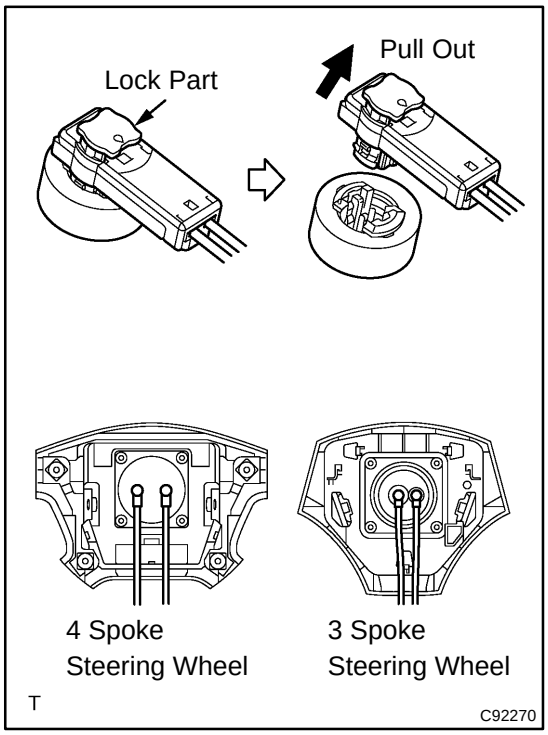

(c) Using a screwdriver, release the lock part of each airbag connector and disconnect the 2 airbag connectors.

(d) Disconnect the horn connector. (4 Spoke steering wheel)

NOTICE:

When removing the horn button assy, take care not to pull the airbag wire harness.

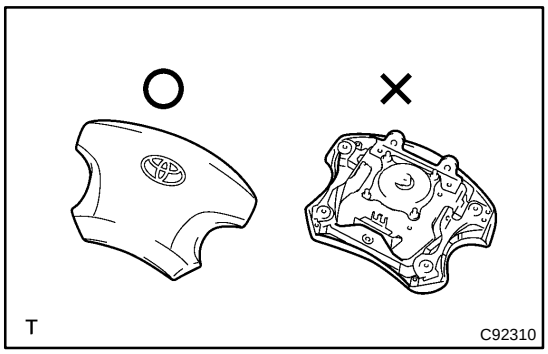

CAUTION:

- **When storing the horn button assy, keep the upper surface of the pad facing upward.**
- **Never disassemble the horn button assy.**

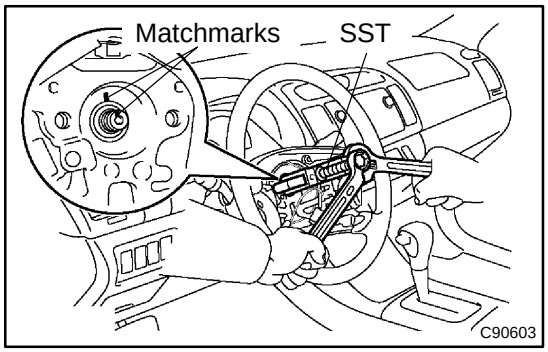

9. REMOVE STEERING WHEEL ASSY

SST 09950−50013 (09951−05010, 09952−05010, 09953−05020, 09954−05021)

10. REMOVE INSTRUMENT CLUSTER FINISH PANEL ASSY(See page 71−16)

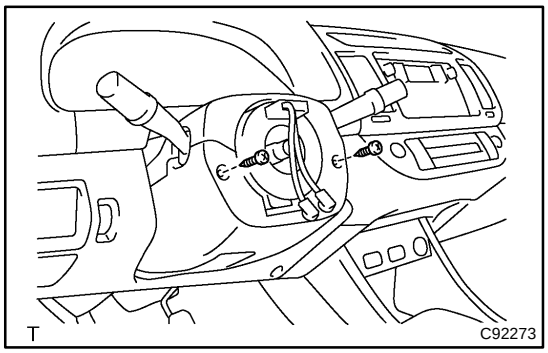

11. REMOVE STEERING COLUMN COVER LWR

(a) Remove the 2 screws and steering column cover upper.

12. REMOVE STEERING COLUMN COVER UPR

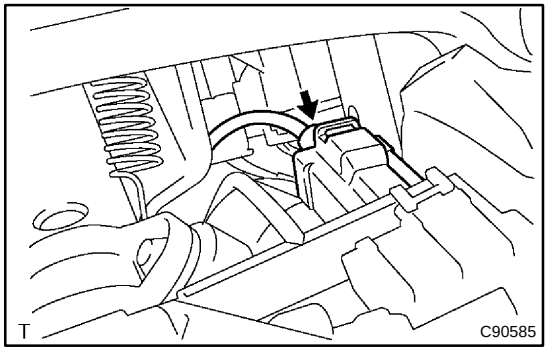

13. DISCONNECT FLOOR SHIFT PARKING LOCK CABLE ASSY

(a) Using a screwdriver, disconnect the floor shift parking lock cable from the upper bracket.

14. REMOVE SPIRAL CABLE SUB−ASSY(See page 05−1456)

15. REMOVE HEADLAMP DIMMER SWITCH ASSY

(a) Disconnect the connector and remove the headlamp dimmer switch assy.

16. REMOVE WINDSHIELD WIPER SWITCH ASSY

(a) Disconnect the connector and remove the windshield wiper switch assy.

17. REMOVE FRONT DOOR SCUFF PLATE LH(See page 71−16)

18. REMOVE COWL SIDE TRIM SUB−ASSY LH(See page 71−16)

19. REMOVE INSTRUMENT PANEL FINISH LOWER PANEL LH(See page 71−16)

20. REMOVE INSTRUMENT PNL INSERT SUB−ASSY LWR LH(See page 71−16)

21. REMOVE HEATER TO FOOT DUCT NO.3(See page 71−16)

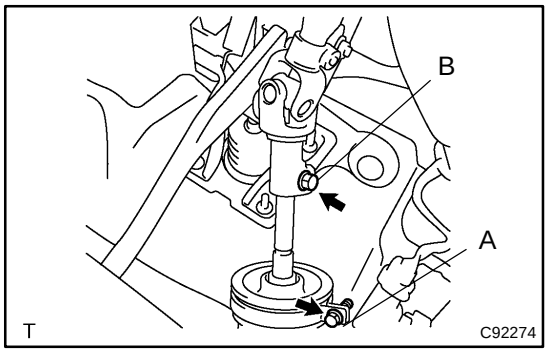

22. DISCONNECT STEERING INTERMEDIATE SHAFT ASSY

(a) Loosen the bolt A and remove the clamp from the steering column hole cover No.1.

(b) Separate the steering column hole cover No.2 from the steering column hole cover No.1.

(c) Loosen the bolt B.

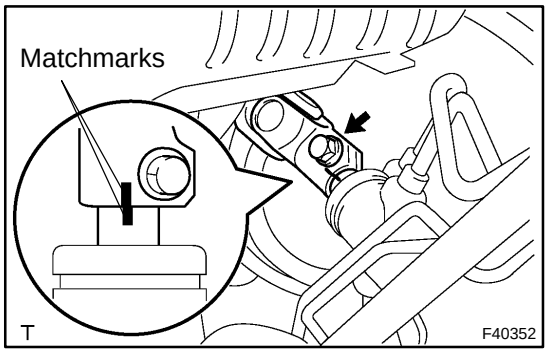

(d) Place matchmarks on the steering intermediate shaft sub−assy and steering gear assy.

(e) Remove the bolt and disconnect the steering intermediate shaft sub−assy.

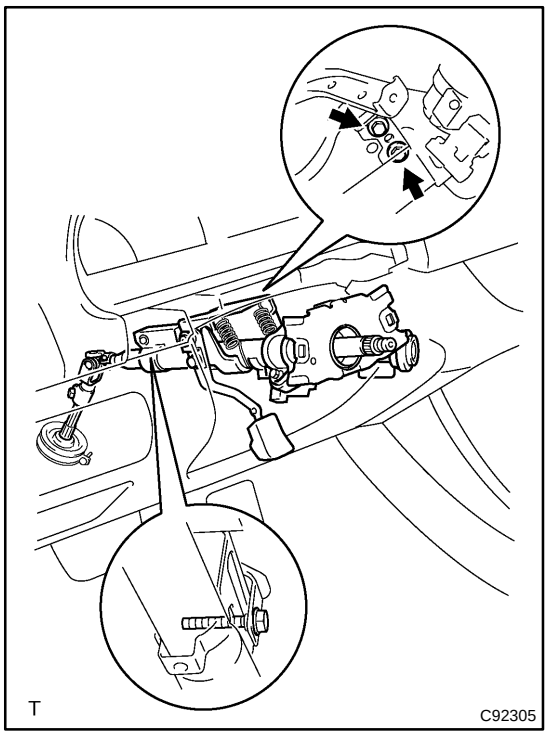

23. REMOVE STEERING COLUMN ASSY

(a) Disconnect the connectors and wire harness clamps from the steering column assy.

(b) Remove the 3 bolts and steering column assy.

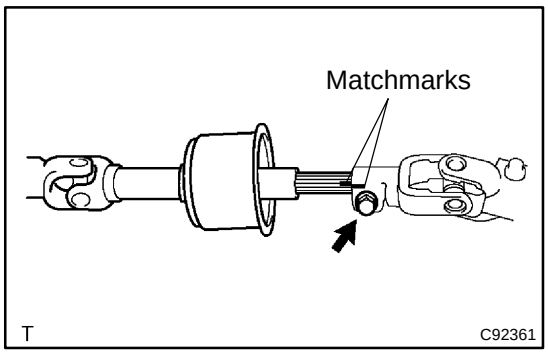

24. REMOVE STEERING INTERMEDIATE SHAFT ASSY

(a) Place matchmarks on the steering intermediate shaft sub−assy and steering sliding yoke sub−assy.

(b) Remove the bolt and steering intermediate shaft sub−assy.

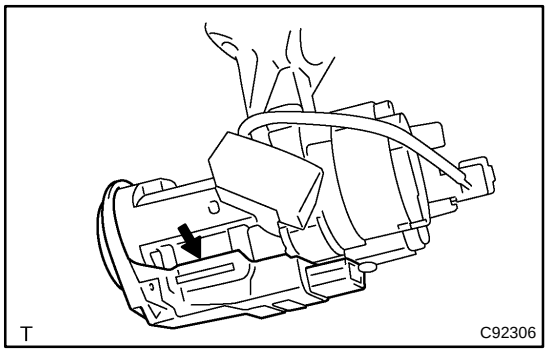

25. REMOVE TRANSPONDER KEY AMPLIFIER (W/ ENGINE IMMOBILISER SYSTEM)

(a) Disengage the claw hung on the upper bracket with a screwdriver.

(b) Pull the transponder key amplifier toward the rear of the vehicle with the claw open.

NOTICE:

Take care not to apply excessive force to prevent the case from being damaged.

26. REMOVE KEY CYLINDER LAMP ASSY (W/ ILLUMINATED ENTRY SYSTEM)

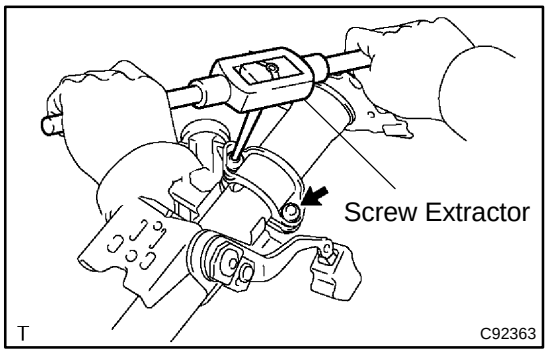

27. REMOVE STEERING COLUMN UPPER W/SWITCH BRACKET ASSY

(a) Using a centering punch, mark the center of the 2 tapered−head bolts.

(b) Using a 3 − 4 mm (0.12 − 0.16 in.) drill, drill into the 2 bolts.

(c) Using a screw extractor, remove the 2 bolts and steering column upper w/ switch bracket assy.

28. REMOVE STEERING COLUMN CLAMP UPPER

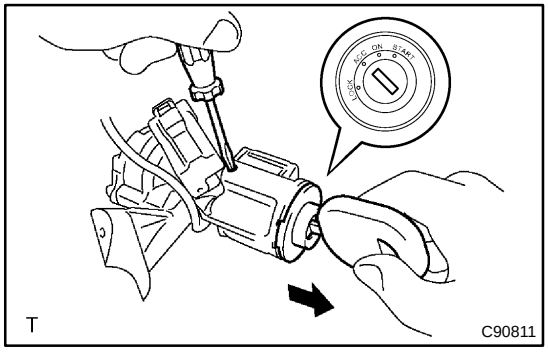

29. REMOVE IGNITION SWITCH LOCK CYLINDER ASSY

(a) Place the ignition switch lock cylinder assy at the ACC position.

(b) Push down the stop pin with a screwdriver, and pull out the cylinder assy.

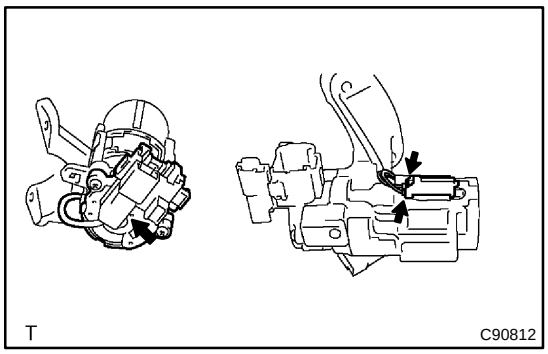

30. REMOVE UN−LOCK WARNING SWITCH ASSY

(a) Disconnect the un−lock warning switch assy connector from the ignition or starter switch assy.

(b) Remove the un−lock warning switch assy.

31. REMOVE IGNITION OR STARTER SWITCH ASSY

(a) Remove the 2 screws and ignition or starter switch assy from the steering column bracket assy.

32. INSTALL IGNITION OR STARTER SWITCH ASSY

(a) Install the ignition or starter switch assy to the steering column bracket assy with the 2 screws.

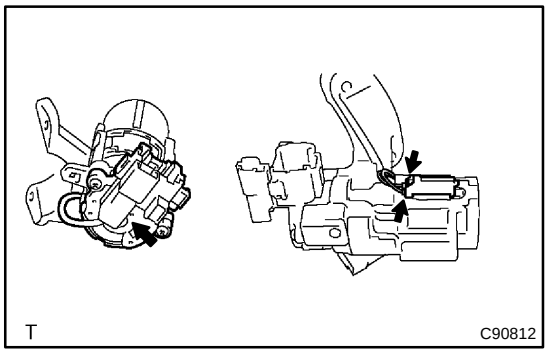

33. INSTALL UN−LOCK WARNING SWITCH ASSY

(a) Install the un−lock warning switch assy.

(b) Connect the un−lock warning switch assy connector to the ignition or starter switch assy.

34. INSTALL IGNITION SWITCH LOCK CYLINDER ASSY

(a) Make sure that the ignition switch lock cylinder assy is at the ACC position.

(b) Install the ignition switch lock cylinder assy.

35. INSPECT STEERING LOCK OPERATION

(a) Check that the steering lock mechanism is activated when removing the key.

(b) Check that the steering lock mechanism is deactivated when inserting the key and turning it to ACC position.

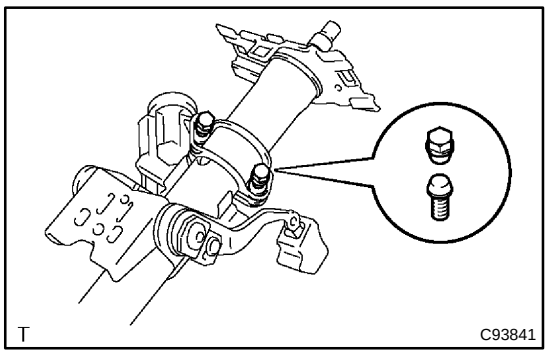

36. INSTALL STEERING COLUMN UPPER W/SWITCH BRACKET ASSY

(a) Temporarily install the steering column upper w/switch bracket assy and steering column upper clamp with 2 new tapered−head bolts.

(b) Tighten the 2 tapered−head bolts until the bolt heads break off.

37. INSTALL KEY CYLINDER LAMP ASSY (W/ ILLUMINATED ENTRY SYSTEM)

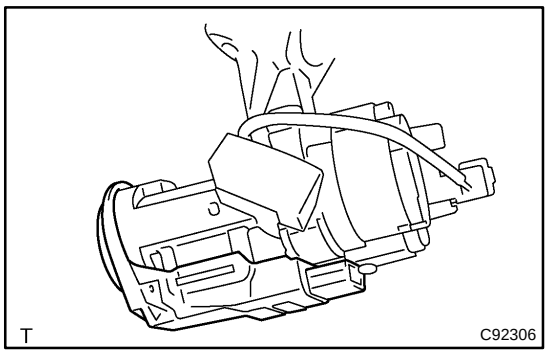

38. INSTALL TRANSPONDER KEY AMPLIFIER (W/ ENGINE IMMOBILISER SYSTEM)

(a) Align the transponder key amplifier with the installation position of the upper bracket with the amplifier inclined.

(b) Push the trasponder key amplifier up and connect it to the upper bracket.

NOTICE:

Take care not to push the amplifier up with excessive force to prevent it from being damaged.

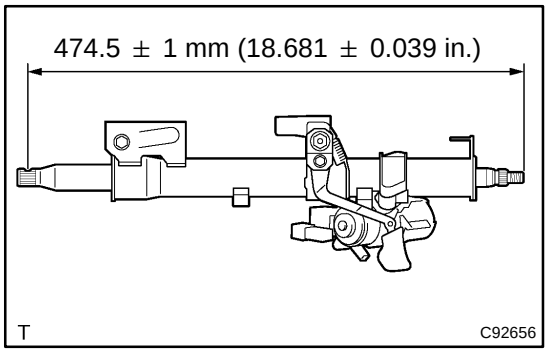

39. INSPECT STEERING COLUMN ASSY

(a) Measure the length of steering main shaft.
Standard length: 474.5 ± 1 mm (18.681 ± 0.039 in.)

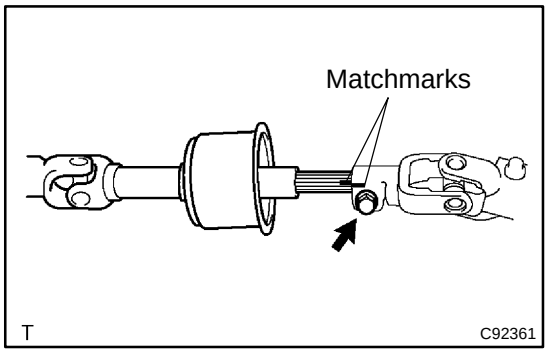

40. INSTALL STEERING INTERMEDIATE SHAFT ASSY

(a) Align the matchmark with the one on the steering intermediate shaft sub−assy and steering main shaft assy.

(b) Temporarily install the steering intermediate shaft sub−assy with the bolt.

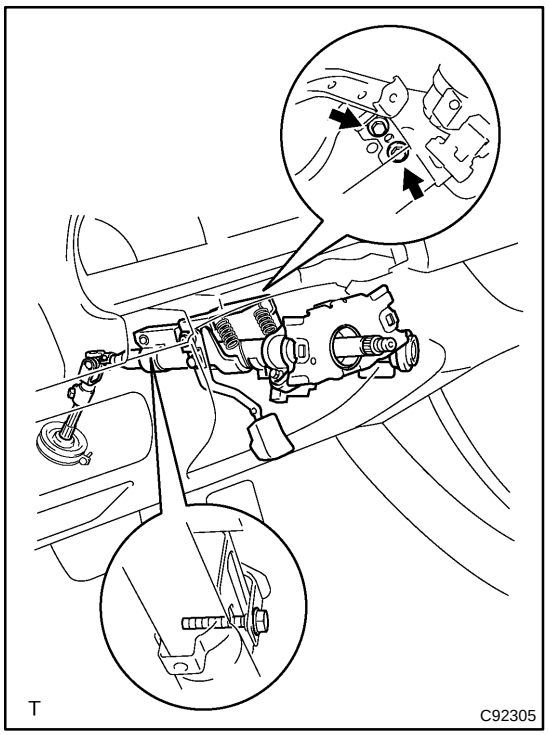

41. INSTALL STEERING COLUMN ASSY

(a) Install the steering column assy with the 3 bolts.
Torque: 20.6 N·m (210 kgf·cm, 15 ft·lbf)

(b) Connect the connectors and wire harness clamps.

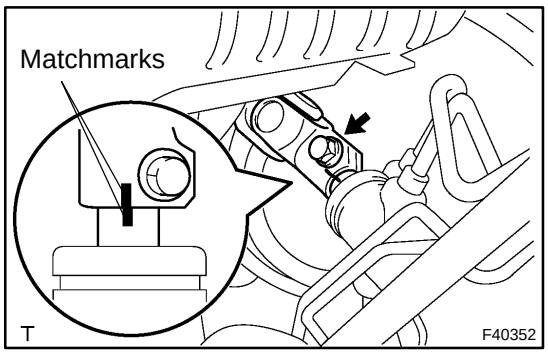

42. CONNECT STEERING INTERMEDIATE SHAFT ASSY

(a) Align the matchmarks on the intermediate shaft sub−assy and steering gear assy.

(b) Install the steering intermediate shaft sub−assy with the bolt.

Torque: 35.3 N·m (360 kgf·cm, 26 ft·lbf)

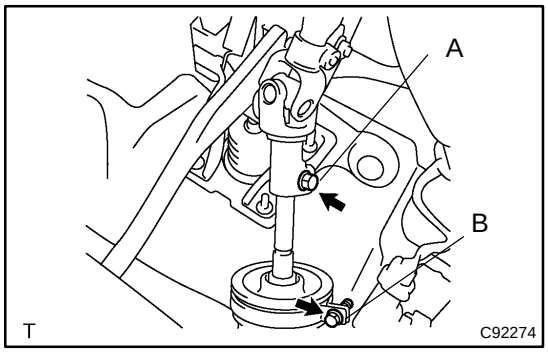

(c) Tighten the bolt A.

Torque: 35.3 N·m (360 kgf·cm, 26 ft·lbf)

(d) Install the steering column hole cover No. 2 to the steering hole cover No.1.

(e) Connect the clamp to the steering column hole cover No.1 and tighten the bolt B.

43. INSTALL HEADLAMP DIMMER SWITCH ASSY

(a) Install the windshield wiper switch assy and connect the connector.

44. INSTALL WINDSHIELD WIPER SWITCH ASSY

(a) Install the headlamp dimmer switch assy and connect the connector.

45. PLACE FRONT WHEELS FACING STRAIGHT AHEAD

46. INSTALL SPIRAL CABLE SUB−ASSY(See page 60−34)

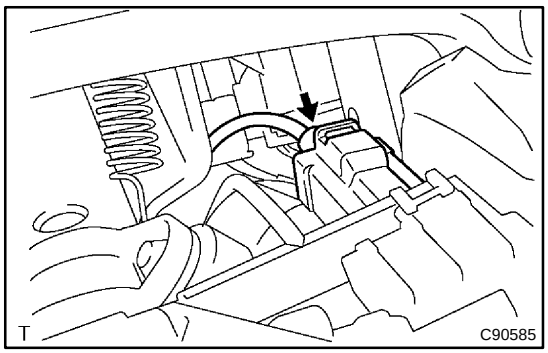

47. CONNECT FLOOR SHIFT PARKING LOCK CABLE ASSY

(a) Turn the ignition switch to ACC or ON.

(b) Connect the cable to the upper bracket.

48. CHECK KEY INTERLOCK OPERATION(See page 40−51)

49. INSTALL STEERING COLUMN COVER UPR

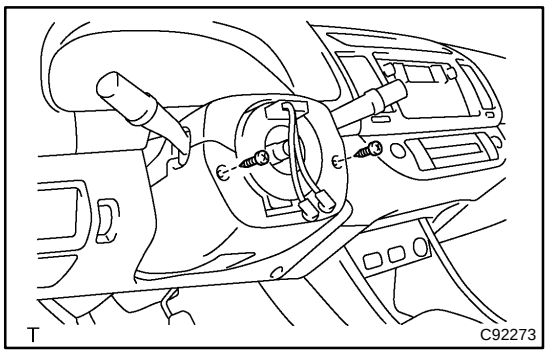

50. INSTALL STEERING COLUMN COVER LWR

(a) Install the steering column cover with the 2 screws.

51. INSTALL INSTRUMENT CLUSTER FINISH PANEL ASSY

52. INSTALL HEATER TO FOOT DUCT NO.3

53. INSTALL INSTRUMENT PNL INSERT SUB−ASSY LWR LH

54. INSTALL INSTRUMENT PANEL FINISH LOWER PANEL LH

55. INSTALL COWL SIDE TRIM SUB−ASSY LH

56. INSTALL FRONT DOOR SCUFF PLATE LH

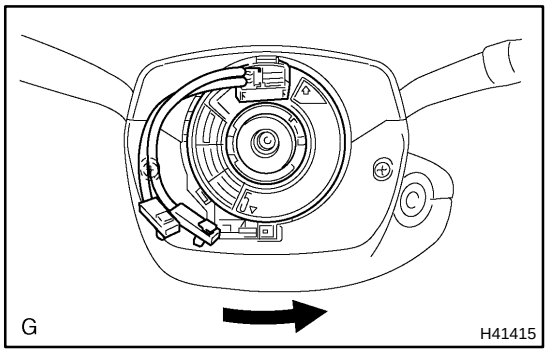

57. CENTER SPIRAL CABLE

(a) Check that the ignition switch is to OFF.

(b) Check that the battery negative terminal is disconnected.

NOTICE:

Do not start the operation for 90 seconds after removing the terminal.

(c) Turn the cable counterclockwise by hand until it becomes harder to turn.

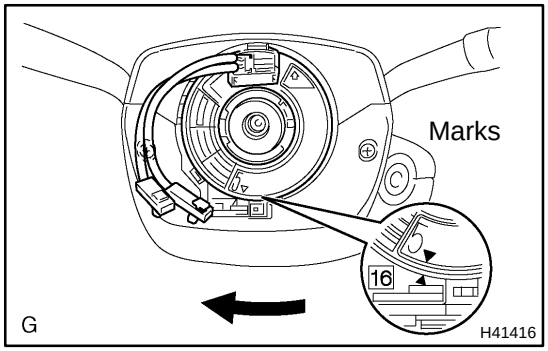

(d) Then rotate the cable clockwise about 2.5 turns to align the marks.

HINT:

The cable will rotate about 2.5 turns to both right and left of the center.

58. INSTALL STEERING WHEEL ASSY

(a) Align the matchmark with the one on the steering wheel assy and steering main shaft assy.

(b) Install the steering wheel assy with the set nut.

Torque: 50 N·m (510 kgf·cm, 37 ft·lbf)

(c) Connect the connector.

59. INSPECT HORN BUTTON ASSY(See page 60−25)

60. INSTALL HORN BUTTON ASSY

NOTICE:

- **Never use the airbag parts removed from another vehicle. When replacing parts, replace with new ones.**
- **Make sure that the horn button assy is installed with the specified torque.**
- **If the horn button assy has been dropped, or there are cracks, dents or other defects in the case or connector, replace the horn button assy with a new one.**
- **When installing the horn button assy, take care so that the wirings do not interfere with other parts and that they are not pinched between other parts.**

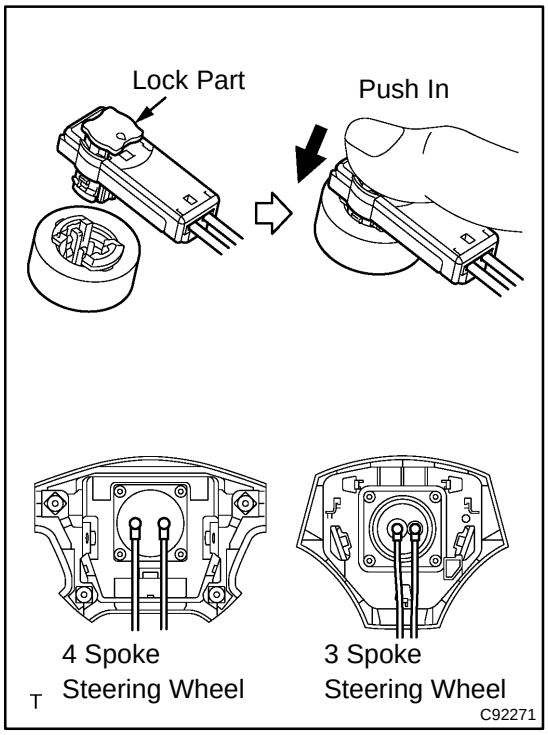

(a) Connect the 2 airbag connectors.

(b) Connect the horn connector. (4 Spoke steering wheel)

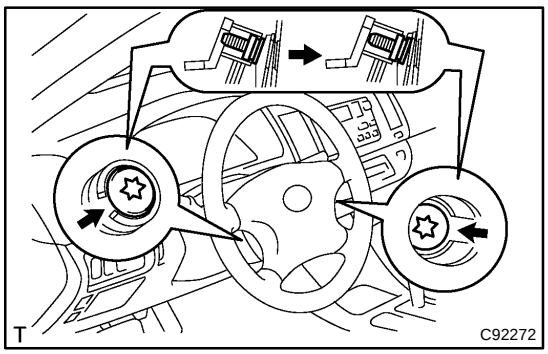

(c) Install the horn button assy after confirming that the circumference groove of the torx® screws is caught on the screw case.

(d) Using a torx® socket wrench, torque the 2 screws.
Torque: 8.8 N·m (90 kgf·cm, 78 in.·lbf)

61. INSTALL STEERING WHEEL COVER LOWER NO.2(See page 60−25)

62. INSTALL STEERING WHEEL COVER LOWER NO.3 (W/O STEERING PAD SWITCH 4 SPOKE STEERING WHEEL)(See page 60−25)

63. INSTALL CONNECTOR COVER (W/ STEERING PAD SWITCH 4 SPOKE STEERING WHEEL)(See page 60−25)

64. INSTALL STEERING WHEEL COVER LOWER NO.3 (3 SPOKE STEERING WHEEL ASSY)(See page 60−25)

65. INSPECT STEERING WHEEL CENTER POINT

66. INSPECT SRS WARNING LIGHT(See page 05−1456)

POWER STEERING SYSTEM

PRECAUTION

5105K−03

1. HANDLING PRECAUTIONS ON STEERING SYSTEM

(a) Care must be taken to when replacing parts. Incorrect replacement could affect the performance of the steering system and result in a driving hazard.

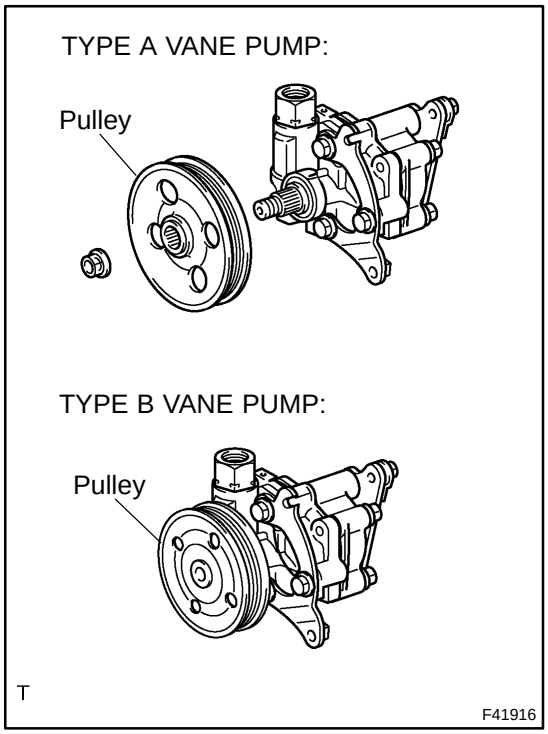

(b) 1MZ−FE/3MZ−FE engine has 2 types of vane pump assy.

HINT:

TYPE A VANE PUMP:

Vane pump pulley can be removed from the vane pump shaft (See page 51−15).

TYPE B VANE PUMP:

Vane pump pulley cannot be removed from the vane pump shaft (See page 51−15).

2. HANDLING PRECAUTIONS ON SRS AIRBAG SYSTEM

(a) The CAMRY is equipped with SRS (Supplemental Restraint System) such as the driver airbag and front passenger airbag. Failure to carry out service operation in correct sequence could cause the SRS to unexpectedly deploy during servicing, possibly leading to a serious accident. Before servicing (including removal or installation of parts, inspection or replacement), be sure to read the precautionary notice for the supplemental restraint system (See page 60−1).

5105L−09

PROBLEM SYMPTOMS TABLE

HINT:

Use the table below to help you find the cause of the problem. The numbers indicate the priority of the likely cause of the problem. Check each part in the order shown. If necessary, repair or replace these parts.

Symptom	Suspect Area	See page
Hard steering	1. Tires (Improperly inflated)	28−1
	2. Power steering fluid level (Low)	51−3
	3. Drive belt (Loose)	14−5 14−140
	4. Front wheel alignment (Incorrect)	26−5
	5. Steering system joints (Worn)	−
	6. Suspension arm ball joints (Worn)	26−19
	7. Steering column (Binding)	−
	8. Power steering vane pump	51−8 51−17
	9. Power steering gear	51−28
Poor return	1. Tires (Improperly inflated)	28−1
	2. Front wheel alignment (Incorrect)	26−5
	3. Steering column (Binding)	−
	4. Power steering gear	51−28
Excessive play	1. Steering system joints (Worn)	−
	2. Suspension arm ball joints (Worn)	26−19
	3. Intermediate shaft, Sliding yoke (Worn)	−
	4. Front wheel bearing (Worn)	30−23
	5. Power steering gear	51−28
Abnormal noise	1. Power steering fluid level (Low)	51−3
	2. Steering system joints (Worn)	−
	3. Power steering vane pump	51−8 51−17
	4. Power steering gear	51−28

5105M−05

ON−VEHICLE INSPECTION

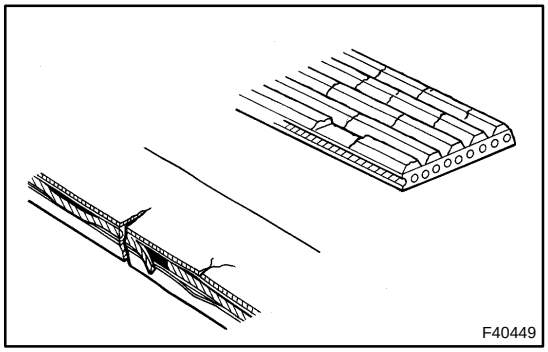

1. INSPECT DRIVE BELT

(a) Visually check the belt for excessive wear, frayed cords, etc.

If any defect is found, replace the drive belt.

HINT:

Cracks on the rib side of a belt are considered acceptable. If the missing chunks from the ribs are found on the belt, it should be replaced.

2. BLEED POWER STEERING SYSTEM

(a) Check the fluid level.

(b) Jack up the front of the vehicle and support it with the stands.

(c) Turn the steering wheel.

(1) With the engine stopped, turn the wheel slowly from lock to lock several times.

(d) Lower the vehicle.

(e) Start the engine.

(1) Run the engine at idle for a few minutes.

(f) Turn the steering wheel.

(1) With the engine idling, turn the wheel to left or right full lock position and keep it there for 2 − 3 seconds, then turn the wheel to the opposite full lock position and keep it there for 2 − 3 seconds.

(2) Repeat (1) several times.

(g) Stop the engine.

(h) Check for forming or emulsification.

Especially, if the system has to be bled twice because of foaming or emulsification, check for fluid leaks in the system.

(i) Check the fluid level.

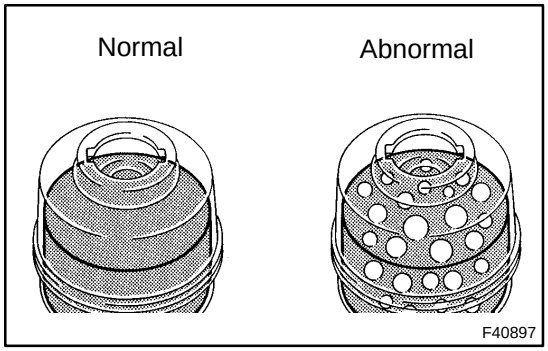

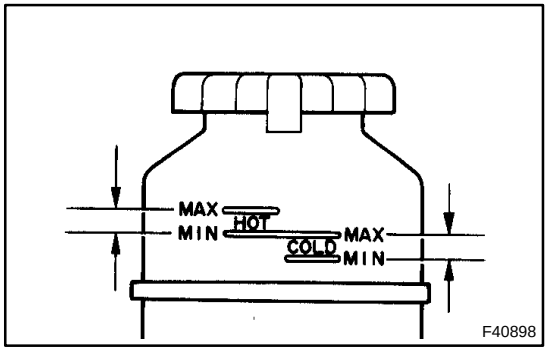

3. CHECK FLUID LEVEL

(a) Keep the vehicle level.

(b) With the engine stopped, check the fluid level in the oil reservoir.

If necessary, add fluid.

Fluid: ATF DEXRON® II or III

HINT:

Check that the fluid level is within the HOT LEVEL range on the reservoir cap. If the fluid is cold, check that it is within the COLD LEVEL range.

(c) Start the engine and run it at idle.
(d) Turn the steering wheel from lock to lock several times to raise fluid temperature.
Fluid temperature: 75 − 80˚C (167 − 176˚F)

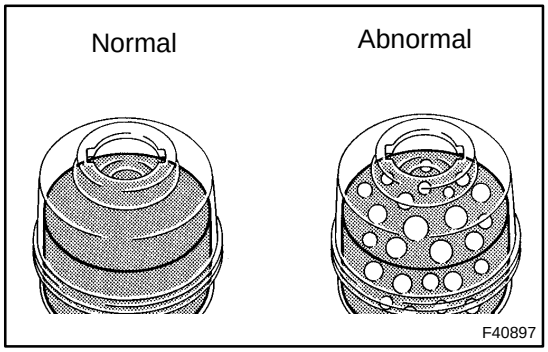

(e) Check for foaming or emulsification.
If foaming or emulsification is identified, bleed the power steering system.

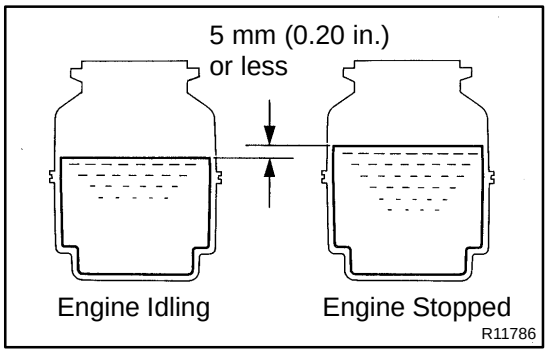

(f) With the engine idling, measure the fluid level in the oil reservoir.
(g) Stop the engine.
(h) Wait a few minutes and remeasure the fluid level in the oil reservoir.
Maximum fluid level rise: 5 mm (0.20 in.)
If a problem is found, bleed the power steering system.
(i) Check the fluid level.

4. CHECK STEERING FLUID PRESSURE

(a) Disconnect the pressure feed tube from the rack & pinion power steering gear assy (See page 51−28).
(b) Connect SST, as shown in the illustration.
SST 09640−10010 (09641−01010, 09641−01020, 09641−01030)

NOTICE:
Check that the valve of the SST is in the open position.

(c) Bleed the power steering system.
(d) Start the engine and run it at idle.
(e) Turn the steering wheel from lock to lock several times to raise fluid temperature.
Fluid temperature: 75 − 80 ˚C (167 − 176 ˚F)

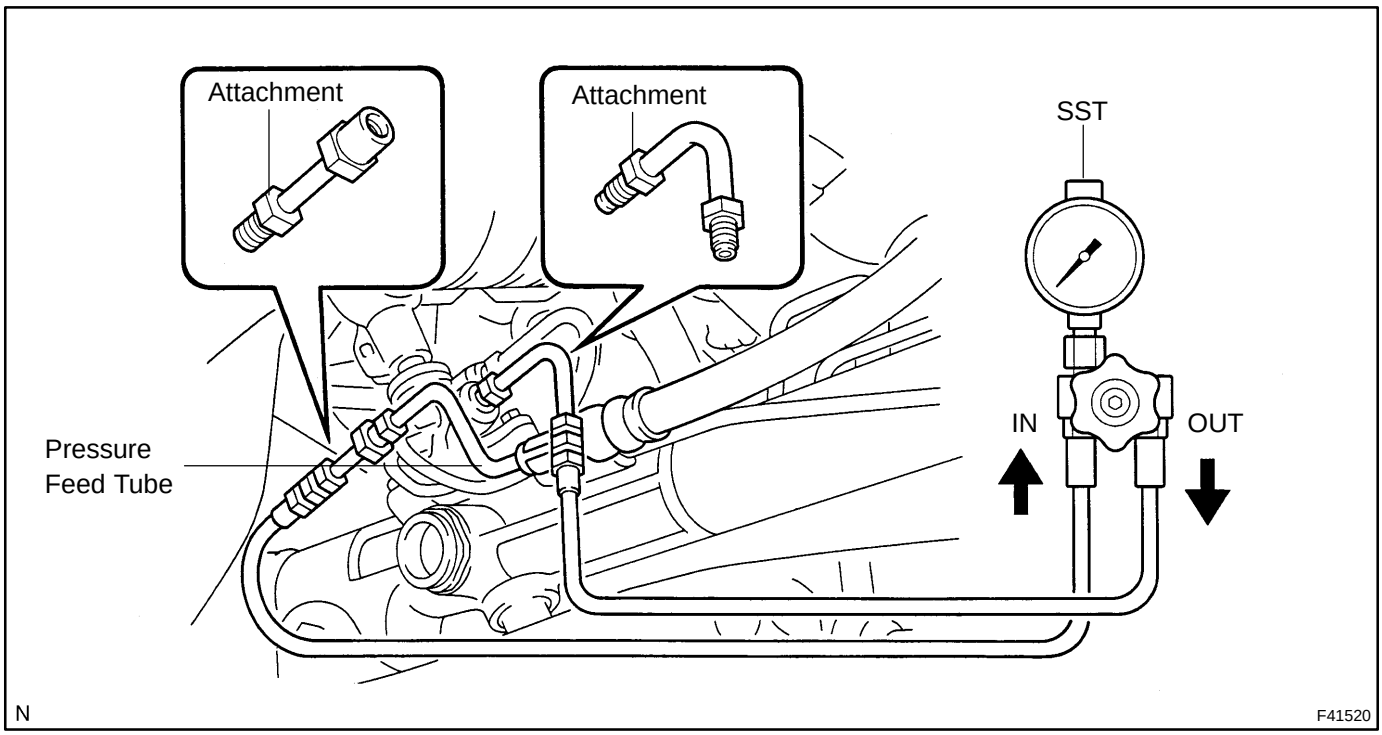

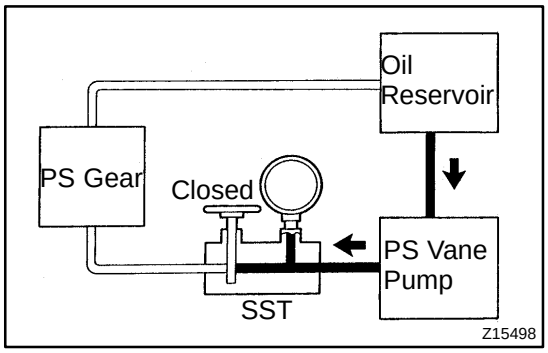

(f) With the engine idling, close the valve of the SST and observe the reading on the SST.

Fluid pressure:

7,800 − 8,300 kPa (80 − 85 kgf/cm^2, 1,138 − 1,209 psi)

NOTICE:

- **Do not keep the valve closed for more than 10 seconds.**
- **Do not let the fluid temperature become too high.**

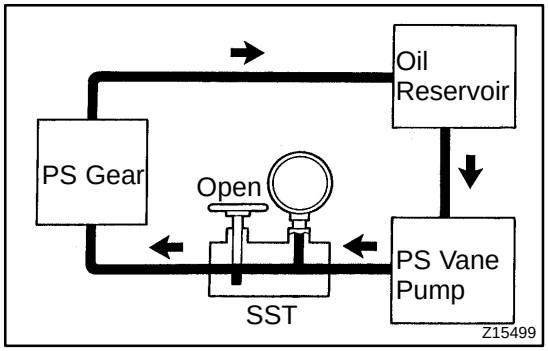

(g) With the engine idling, open the valve fully.

(h) Measure the fluid pressure at engine speeds of 1,000 rpm and 3,000 rpm.

Fluid pressure difference:

490 kPa (5 kgf/cm^2, 71 psi) or less

NOTICE:

Do not turn the steering wheel.

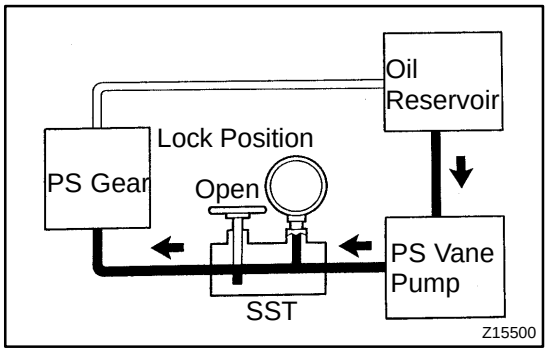

(i) With the engine idling and valve fully opened, turn the steering wheel to full lock position.

Fluid pressure:

7,800 − 8,300 kPa (80 − 85 kgf/cm^2, 1,138 − 1,209 psi)

NOTICE:

- **Do not maintain lock position for more than 10 seconds.**
- **Do not let the fluid temperature become too high.**

(j) Disconnect the SST.
SST 09640−10010 (09641−01010, 09641−01020, 09641−01030)
(k) Connect the pressure feed tube to the rack & pinion power steering gear assy (See page 51−28).
(l) Bleed the power steering system.

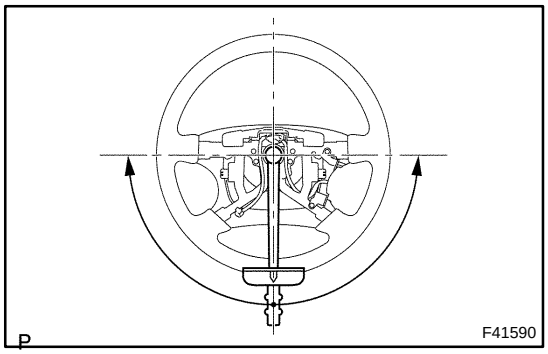

5. CHECK STEERING EFFORT

(a) Center the steering wheel assy.
(b) Remove the horn button assy
(See page 50−9, 50−21).
(c) Start the engine and run it at idle.
(d) Using a torque wrench, measure the steering effort in both directions.
Steering effort (Reference):
6 N·m (60 kgf·cm, 53 in.·lbf) or less

HINT:
Take the tire type, pressure and contact surface into consideration before making your diagnosis.

(e) Install the steering wheel assy set nut.
Torque: 50 N·m (510 kgf·cm, 37 ft·lbf)
(f) Install the horn button assy
(See page 50−9, 50−21).

VANE PUMP ASSY (2AZ−FE)

5105N−02

COMPONENTS

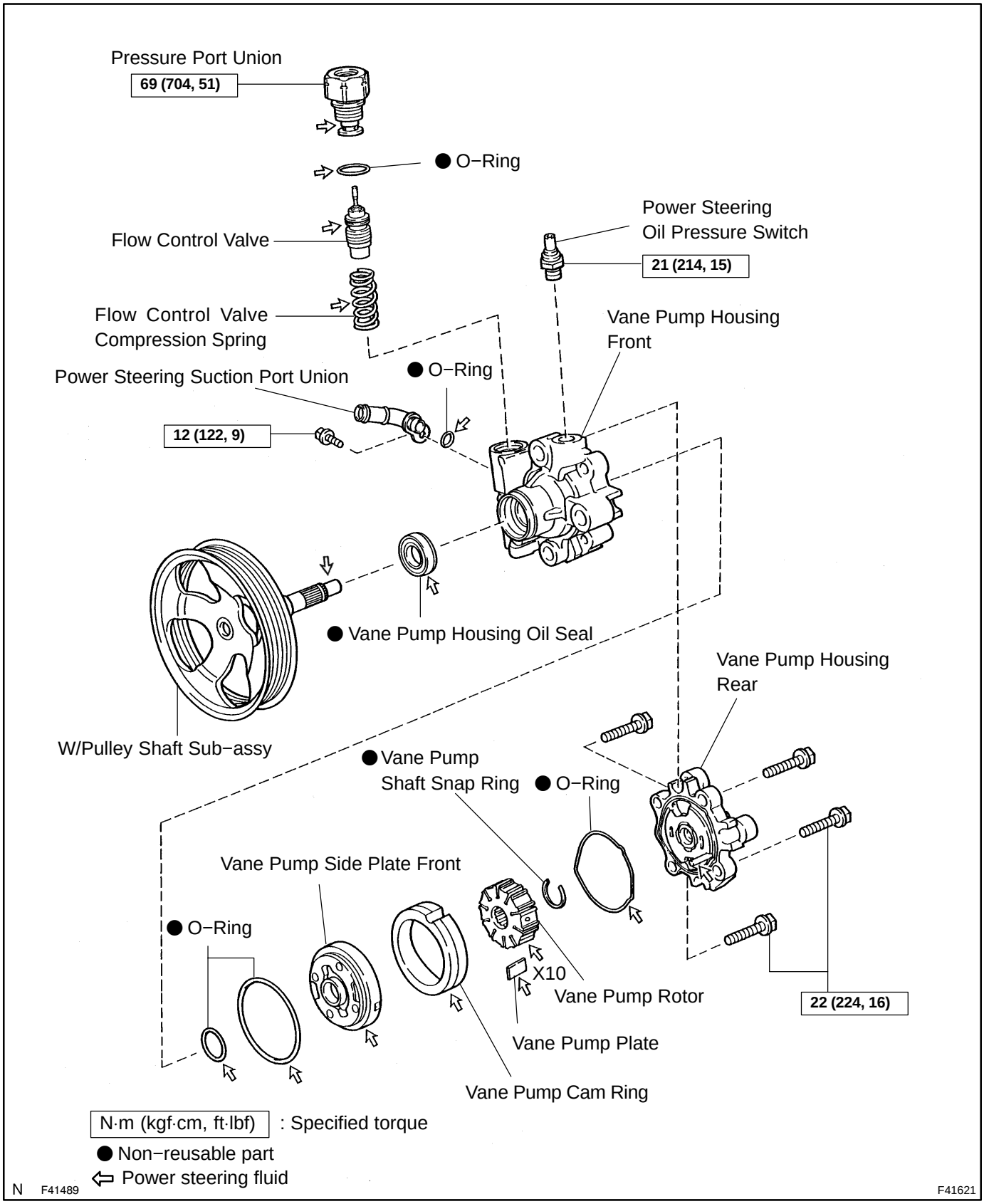

5105O−02

OVERHAUL

NOTICE:

- **When using a vise, do not over tighten.**
- **When installing, coat the parts indicated by the arrows with power steering fluid (See page 51−7).**

1. REMOVE FRONT WHEEL RH

2. DRAIN POWER STEERING FLUID

3. REMOVE FRONT FENDER LINER RH

4. REMOVE FRONT FENDER APRON SEAL RH

5. REMOVE FAN AND GENERATOR V BELT(See page 14−5)

SST 09249−63010

6. DISCONNECT OIL RESERVOIR TO PUMP HOSE NO.1

(a) Remove the clip and disconnect the oil reservoir to pump hose No.1.

NOTICE:

Take care not to spill fluid on the V belt.

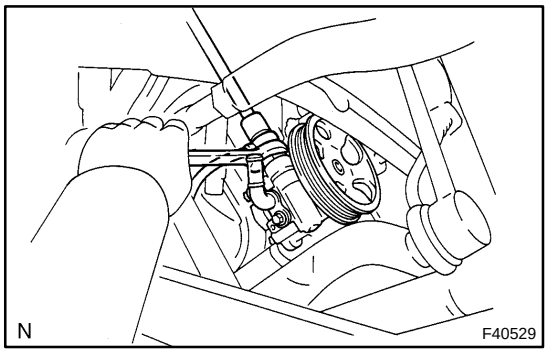

7. DISCONNECT PRESSURE FEED TUBE ASSY

(a) Disconnect the connector from the power steering oil pressure switch.

(b) Using a spanner (27 mm) to hold the pressure port union, remove the union bolt and gasket.

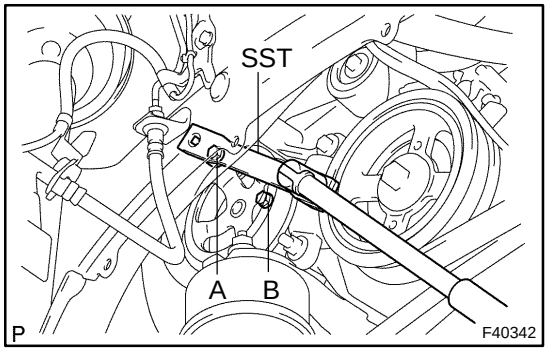

8. REMOVE VANE PUMP ASSY

(a) Disconnect the connector from the oil pressure switch.

(b) Using SST and a deep socket (14 mm), loosen the bolt A.

SST 09249−63010

(c) Remove the bolt B and vane pump assy.

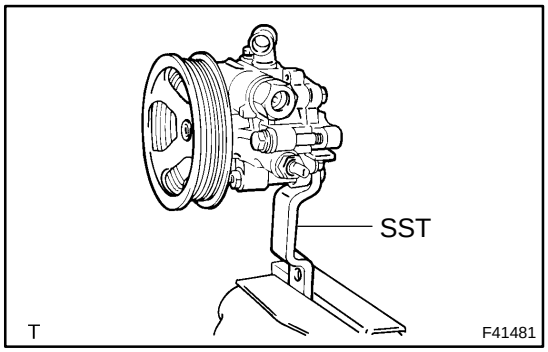

9. FIX VANE PUMP ASSY

(a) Using SST, hold the vane pump assy on the vise through the aluminum plate.

SST 09630−00014 (09631−00132)

HINT:

As follow the necessity, remove and install SST for holding.

10. REMOVE POWER STEERING SUCTION PORT UNION

(a) Remove the bolt and power steering suction port union.

(b) Remove the O−ring from the power steering suction port union.

11. REMOVE PRESSURE PORT UNION

(a) Using a socket wrench (27 mm), remove the pressure port union.

(b) Remove the O−ring from the pressure port union.

12. REMOVE FLOW CONTROL VALVE

13. REMOVE FLOW CONTROL VALVE COMPRESSION SPRING

14. REMOVE POWER STEERING OIL PRESSURE SWITCH

NOTICE:

Be careful not to drop the power steering oil pressure switch.

If the power steering oil pressure switch is dropped or strongly damaged, replace it with a new one.

15. REMOVE VANE PUMP HOUSING REAR

(a) Remove the 4 bolts and vane pump housing rear from the vane pump housing front.

(b) Remove the O−ring from the vane pump housing rear.

16. REMOVE W/PULLEY SHAFT SUB−ASSY

(a) Using a screwdriver, remove the vane pump shaft snap ring from the w/pulley shaft sub−assy.

(b) Remove the w/pulley shaft sub−assy.

17. REMOVE VANE PUMP ROTOR

(a) Remove the 10 vane pump plates.

(b) Remove the vane pump rotor.

18. REMOVE VANE PUMP CAM RING

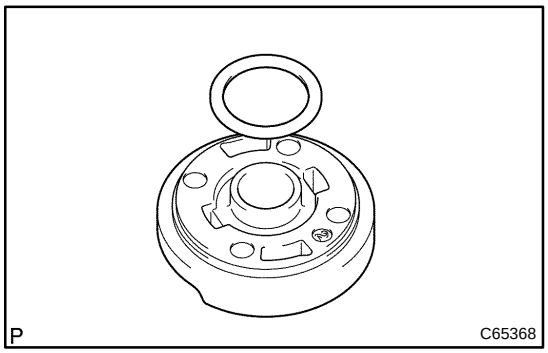

19. REMOVE VANE PUMP SIDE PLATE FRONT

(a) Remove the vane pump side plate front from the vane pump housing front.

(b) Remove the O−ring from the vane pump side plate front.

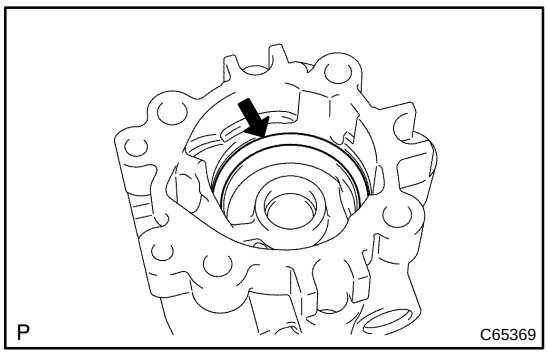

(c) Remove the O−ring from the vane pump housing front.

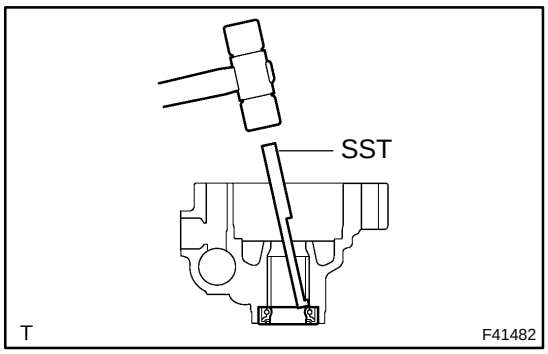

20. REMOVE VANE PUMP HOUSING OIL SEAL

(a) Using SST and a hammer, tap out the vane pump housing oil seal from the vane pump housing front.
SST 09631−10030

NOTICE:

Be careful not to damage the bushing of the vane pump housing front.

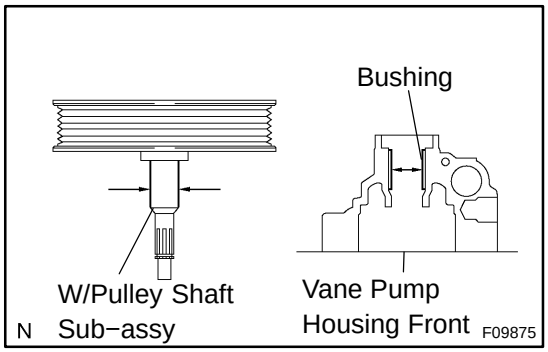

21. INSPECT OIL CLEARANCE

(a) Using a micrometer and a caliper gauge, measure the oil seal clearance.
Standard clearance:
0.009 − 0.031 mm (0.00035 − 0.00122 in.)
Maximum clearance: 0.07 mm (0.0028 in.)

If it is more than the maximum, replace the vane pump assy.

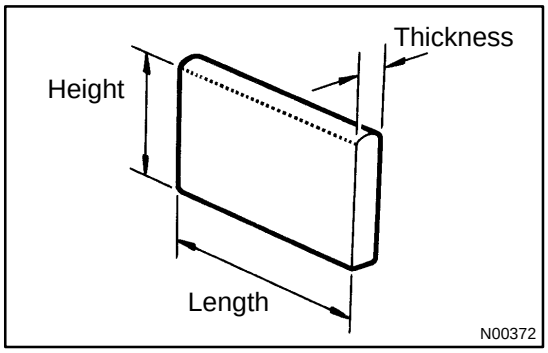

22. INSPECT VANE PUMP ROTOR AND VANE PUMP PLATES

(a) Using a micrometer, measure the height, thickness and length of the vane pump plates.
Minimum height: 7.7 mm (0.303 in.)
Minimum thickness: 1.408 mm (0.05543 in.)
Minimum length: 11.993 mm (0.47216 in.)

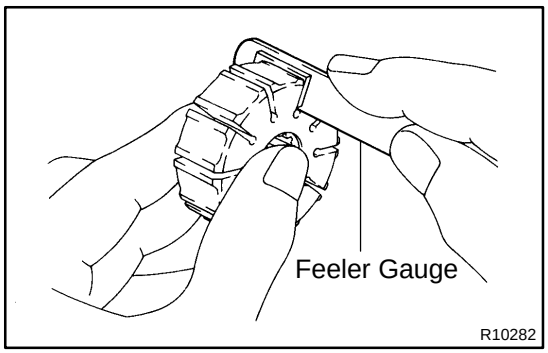

(b) Using a feeler gauge, measure the clearance between a side face of the vane pump rotor groove and vane pump plate.
Maximum clearance: 0.03 mm (0.0012 in.)

If it is more than the maximum, replace the vane pump assy.

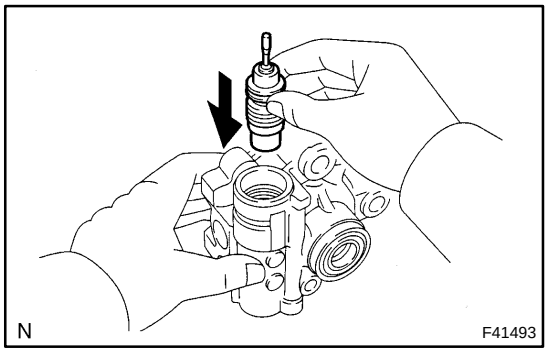

23. INSPECT FLOW CONTROL VALVE

(a) Coat the flow control valve with power steering fluid and check that it falls smoothly into the flow control valve hole by its own weight.

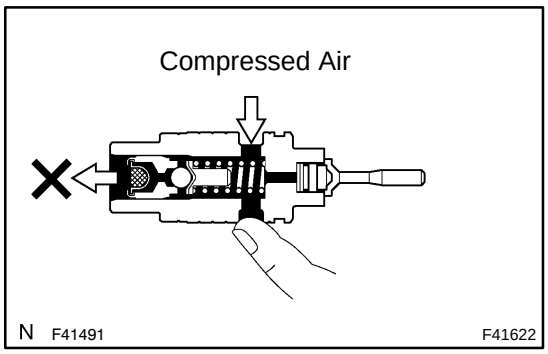

(b) Check the flow control valve for leakage. Close one of the holes and apply compressed air of 392 − 490 kPa (4 − 5 kgf/cm^2, 57 − 71 psi) into the opposite side hole, and confirm that air does not come out from the end holes.

If necessary, replace the vane pump assy.

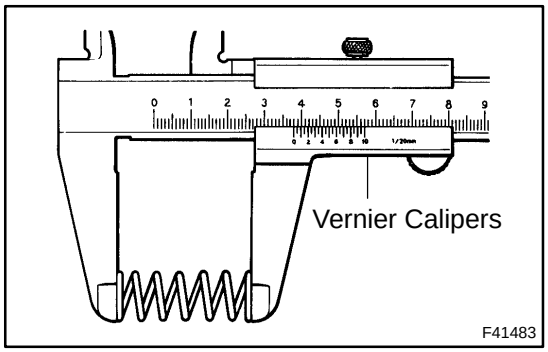

24. INSPECT FLOW CONTROL VALVE COMPRESSION SPRING

(a) Using vernier calipers, measure the free length of the flow control valve compression spring.

Minimum free length: 35.8 mm (1.409 in.)

If it is not within the specification, replace the vane pump assy.

25. INSPECT PRESSURE PORT UNION

If the union seat in the pressure port union is remarkably damaged and it may cause fluid leakage, replace the vane pump assy.

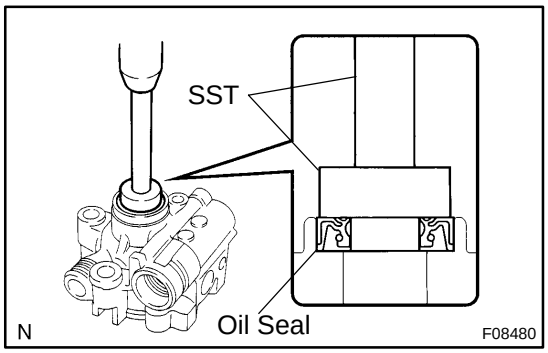

26. INSTALL VANE PUMP HOUSING OIL SEAL

(a) Coat a new oil seal lip with power steering fluid.

(b) Using SST and a press, install the new vane pump housing oil seal.

SST 09950−60010 (09951−00280), 09950−70010 (09951−07100)

NOTICE:

Make sure that the vane pump housing oil seal is installed facing the correct direction.

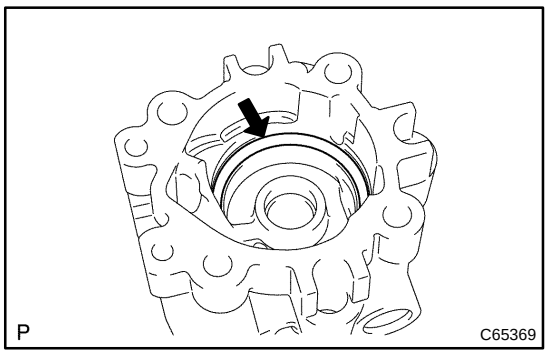

27. INSTALL VANE PUMP SIDE PLATE FRONT

(a) Coat a new O−ring with power steering fluid and install it to the vane pump housing front.

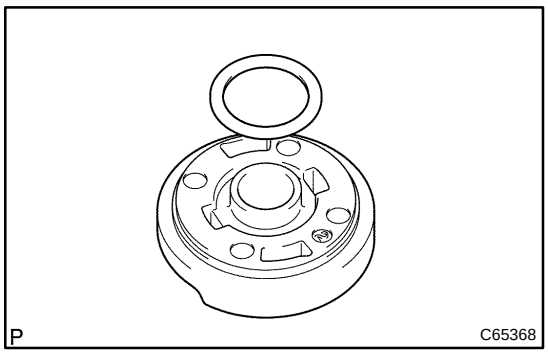

(b) Coat a new O−ring with power steering fluid and install it to the vane pump side plate front.

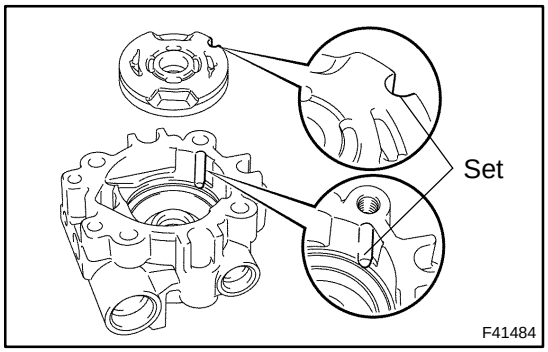

(c) Align the dent of the vane pump side plate front with that of the vane pump housing front, and install the vane pump side plate front.

NOTICE:

Make sure that the vane pump side plate front is installed facing in the correct direction.

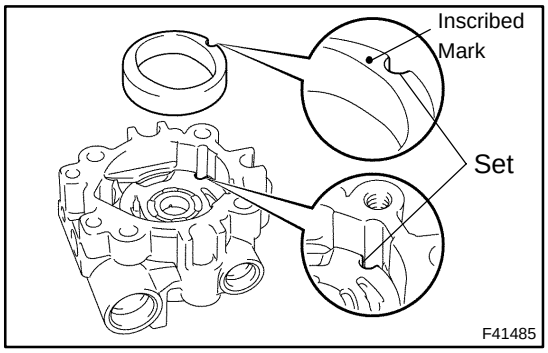

28. INSTALL VANE PUMP CAM RING

(a) Align the dent of the vane pump cam ring with that of the vane pump side plate front, and install the vane pump cam ring with the inscribed mark facing outward.

29. INSTALL W/PULLEY SHAFT SUB−ASSY

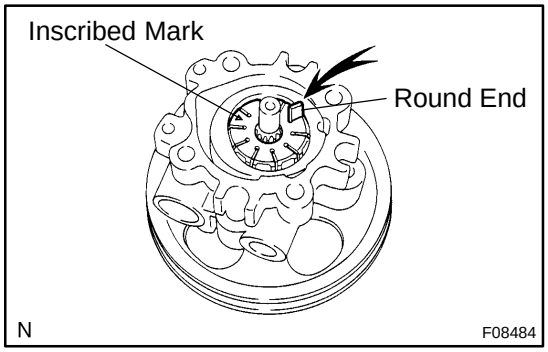

30. INSTALL VANE PUMP ROTOR

(a) Install the vane pump rotor with the inscribed mark facing outward.

(b) Coat 10 vane pump plates with power steering fluid.

(c) Install the vane pump plates with the round end facing outward.

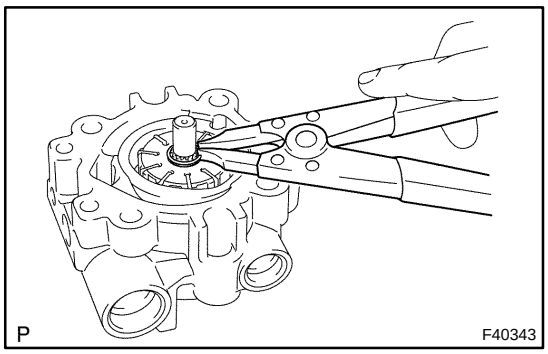

(d) Using a snap ring expander, install a new vane pump shaft snap ring to the w/pulley shaft sub−assy.

31. INSTALL VANE PUMP HOUSING REAR

(a) Coat a new O−ring with power steering fluid and install it to the vane pump housing rear.

(b) Align the straight pin of the vane pump housing rear with the dents of the vane pump cam ring, vane pump side plate front and vane pump housing front, and install the vane pump housing rear with the 4 bolts.

Torque: 22 N·m (224 kgf·cm, 16 ft·lbf)

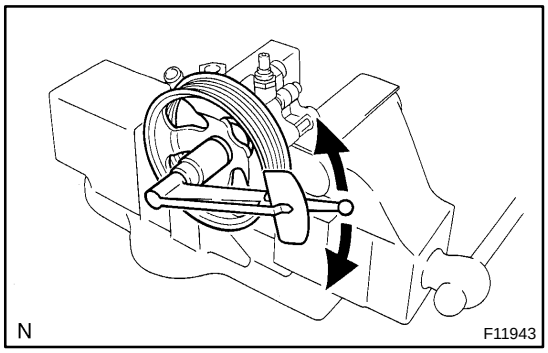

32. MEASURE VANE PUMP ROTATION TORQUE

(a) Check that the vane pump rotates smoothly without abnormal noise.

(b) Temporarily install the service bolt.

Recommended service bolt:
Thread diameter: 10 mm (0.39 in.)
Thread pitch: 1.25 mm (0.0492 in.)
Bolt length: 50 mm (1.97 in.)

(c) Using a torque wrench, check the vane pump rotating torque.

Rotating torque:
0.27 N·m (2.8 kgf·cm, 2.4 in.·lbf) or less

33. INSTALL POWER STEERING OIL PRESSURE SWITCH

(a) Coat a new O−ring with power steering fluid and install it to the power steering oil pressure switch.

(b) Install the power steering oil pressure switch to the vane pump assy.

Torque: 21 N·m (214 kgf·cm, 15 ft·lbf)

34. INSTALL FLOW CONTROL VALVE COMPRESSION SPRING

(a) Coat the flow control valve compression spring with power steering fluid and install it.

35. INSTALL FLOW CONTROL VALVE

(a) Coat the flow control valve with power steering fluid and install it.

36. INSTALL PRESSURE PORT UNION

(a) Coat a new O−ring with power steering fluid and install it to the pressure port union.

(b) Using a socket wrench (27 mm), install the pressure port union.

Torque: 69 N·m (704 kgf·cm, 51 ft·lbf)

37. INSTALL POWER STEERING SUCTION PORT UNION

(a) Coat a new O−ring with power steering fluid and install it to the power steering suction port union.

(b) Install the power steering suction port union with the bolt.

Torque: 12 N·m (122 kgf·cm, 9 ft·lbf)

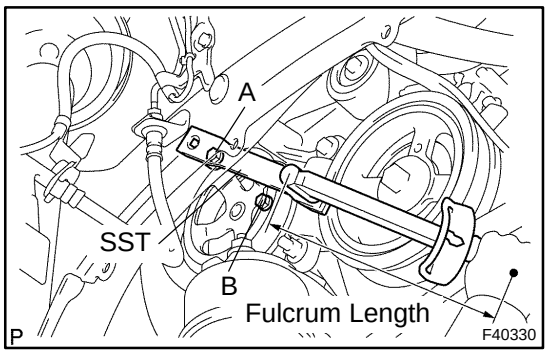

38. INSTALL VANE PUMP ASSY

(a) Temporarily tighten the bolt A to the vane pump assy.

(b) Install the vane pump assy and bolt B.

Torque: 43 N·m (438 kgf·cm, 32 ft·lbf)

(c) Using SST and a deep socket (14 mm), tighten the bolt A.

SST 09249−63010

Torque: 30 N·m (306 kgf·cm, 22 ft·lbf)

HINT:

- Use a torque wrench with a fulcrum length of 345 mm (13.58 in.).
- This torque value is effective in case that SST is parallel to a torque wrench.

(d) Connect the connector to the power steering oil pressure switch.

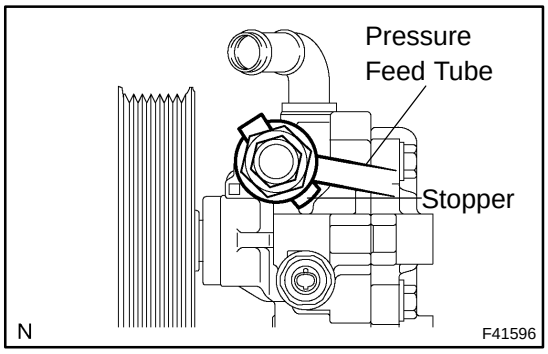

39. CONNECT PRESSURE FEED TUBE ASSY

(a) Install the pressure feed tube assy and gasket to the vane pump assy with the union bolt.

HINT:

Make sure the stopper of the pressure feed tube touches the pump housing front as shown in the illustration.

(b) Using a spanner (27 mm) to hold the pressure port union, torque the union bolt.

Torque: 51.5 N·m (525 kgf·cm, 38 ft·lbf)

40. CONNECT OIL RESERVOIR TO PUMP HOSE NO.1

(a) Connect the oil reservoir to pump hose No.1.

(b) Install the clip.

41. INSTALL FAN AND GENERATOR V BELT(See page 14−5)

SST 09249−63010

42. INSTALL FRONT FENDER APRON SEAL RH

43. INSTALL FRONT FENDER LINER RH

44. INSTALL FRONT WHEEL RH

Torque: 103 N·m (1,050 kgf·cm, 76 ft·lbf)

45. BLEED POWER STEERING FLUID

46. INSPECT FLUID LEAK

VANE PUMP ASSY (1MZ−FE/3MZ−FE)

COMPONENTS

5105P−02

TYPE A VANE PUMP:

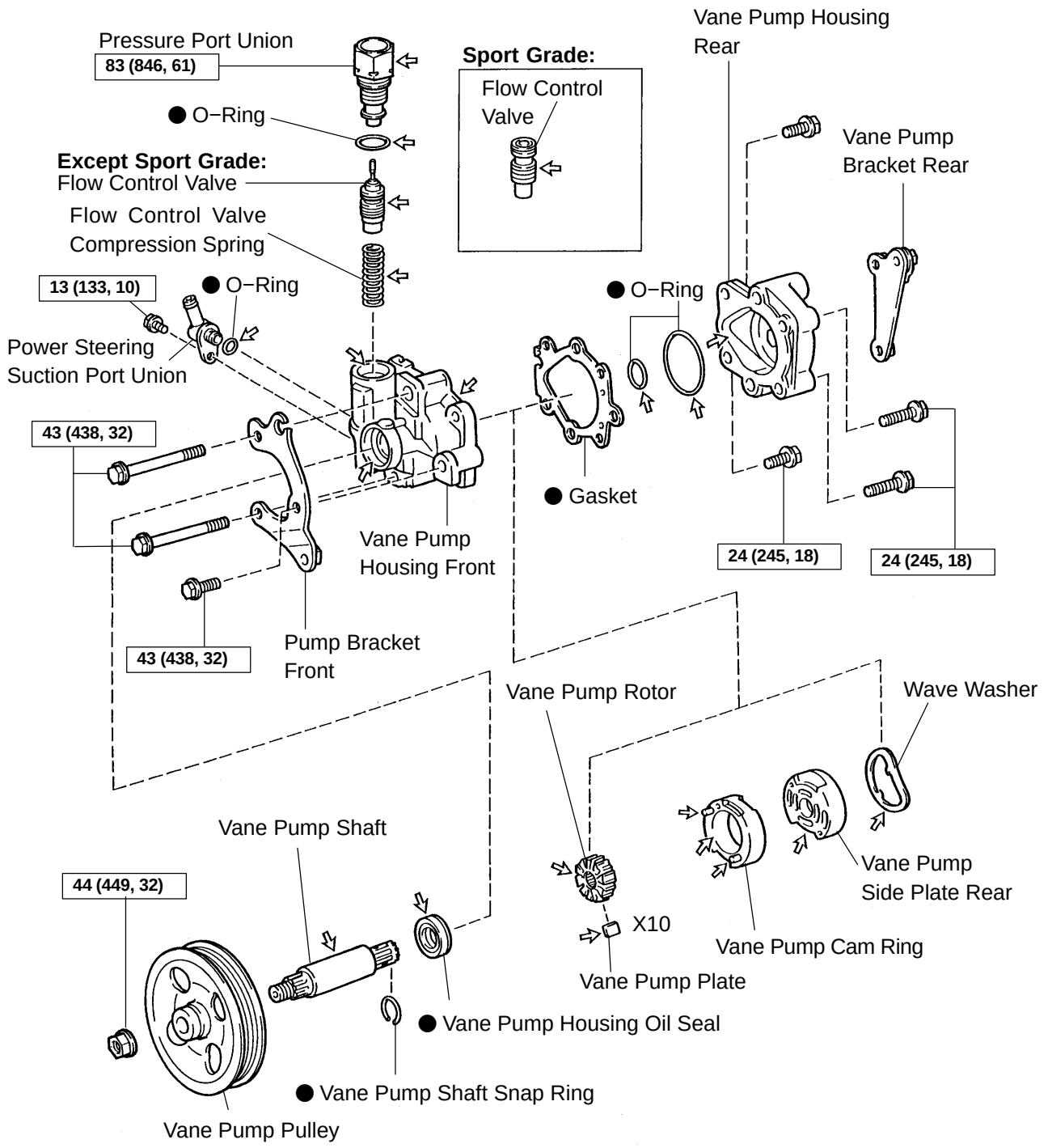

N·m (kgf·cm, ft·lbf) : Specified torque

● Non−reusable part

⇦ Power steering fluid

N F41597

F41917

TYPE B VANE PUMP:

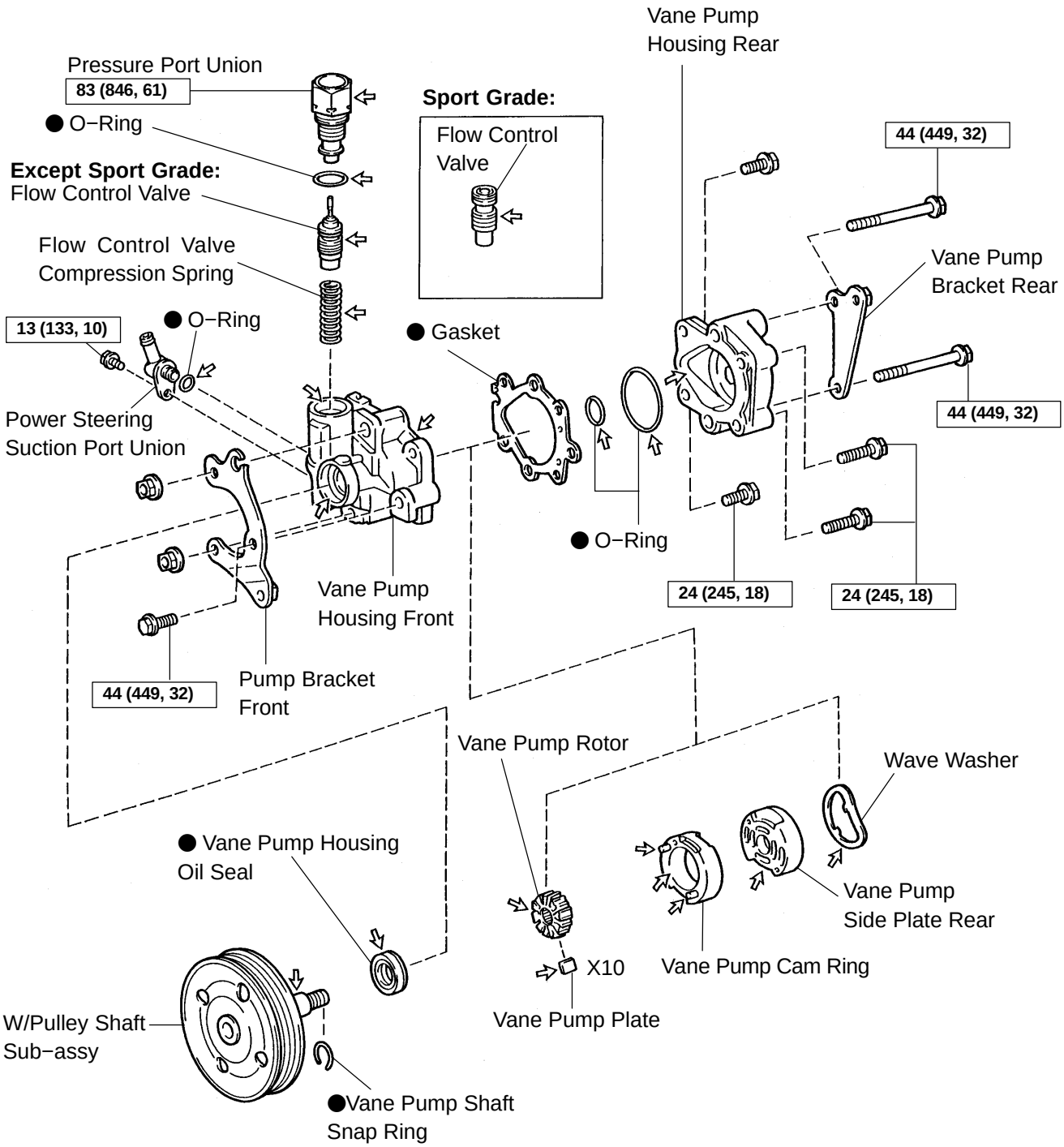

N·m (kgf·cm, ft·lbf) : Specified torque

● Non−reusable part

⇦ Power steering fluid

N

F41488

5105Q−02

OVERHAUL

NOTICE:

- **When using a vise, do not over tighten.**
- **When installing, coat the parts indicated by the arrows with power steering fluid (See page 51−15).**

1. REMOVE FRONT WHEEL RH

2. DRAIN POWER STEERING FLUID

3. REMOVE FRONT FENDER LINER RH

4. REMOVE FRONT FENDER APRON SEAL RH

5. DISCONNECT OIL RESERVOIR TO PUMP HOSE NO.1

(a) Remove the clip and disconnect the oil reservoir to pump hose No.1.

NOTICE:

Take care not to spill fluid on the V belt.

6. REMOVE POWER STEERING OIL PRESSURE SWITCH

(a) Disconnect the connector.

(b) Remove the power steering oil pressure switch from the union bolt.

NOTICE:

Be careful not to drop the power steering oil pressure switch.

If the power steering oil pressure switch is dropped or strongly damaged, replace it with a new one.

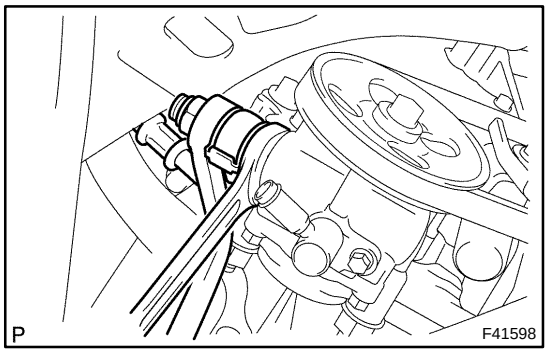

7. DISCONNECT PRESSURE FEED HOSE

(a) Using a spanner (24 mm) to hold the pressure port union, remove the union bolt and gasket.

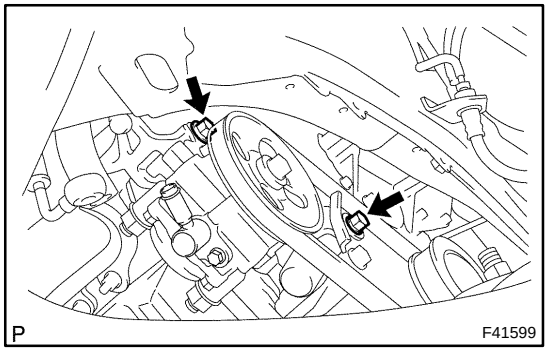

8. REMOVE VANE PUMP V BELT

(a) Loosen the 2 bolts and remove the vane pump V belt.

9. REMOVE VANE PUMP ASSY

(a) Remove the 2 bolts and vane pump assy.

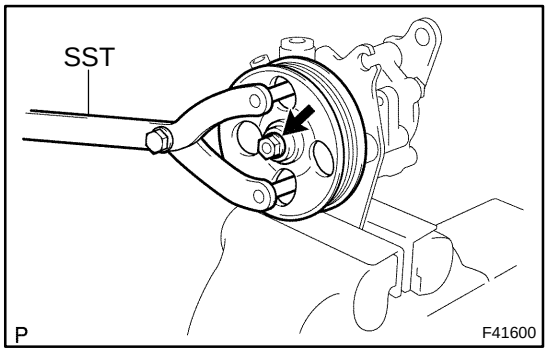

10. REMOVE VANE PUMP PULLEY (TYPE A VANE PUMP)

(a) Using SST, stop the vane pump pulley rotation and loosen the nut.

SST 09960−10010 (09962−01000, 09963−01000)

(b) Remove the nut and vane pump pulley from the vane pump shaft.

11. REMOVE POWER STEERING SUCTION PORT UNION

(a) Remove the bolt and power steering suction port union.

(b) Remove the O−ring from the power steering suction port union.

12. REMOVE PRESSURE PORT UNION

(a) Remove the pressure port union.

(b) Remove the O−ring from the pressure port union.

13. REMOVE FLOW CONTROL VALVE

14. REMOVE FLOW CONTROL VALVE COMPRESSION SPRING

15. REMOVE VANE PUMP BRACKET REAR (TYPE A VANE PUMP)

(a) Remove the 2 bolts, vane pump bracket rear from the vane pump assy.

16. REMOVE VANE PUMP BRACKET REAR (TYPE B VANE PUMP)

(a) Remove the 2 bolts and 2 nuts, vane pump bracket rear from the vane pump assy.

17. REMOVE VANE PUMP HOUSING REAR

(a) Remove the 4 bolts and vane pump housing rear from the vane pump housing front.

(b) Remove the gasket.

(c) Remove the 2 O−rings from the vane pump housing rear.

18. REMOVE VANE PUMP SIDE PLATE REAR

(a) Remove the wave washer from the vane pump side plate rear.

(b) Remove the vane pump side plate rear.

19. REMOVE VANE PUMP CAM RING

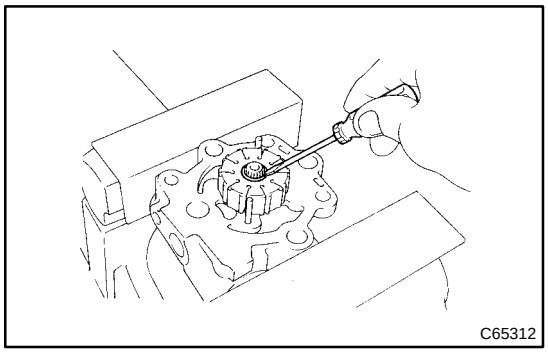

20. REMOVE VANE PUMP ROTOR

(a) Remove the 10 vane pump plates from the vane pump rotor.

(b) Using a screwdriver, remove the vane pump shaft snap ring from the vane pump shaft.

(c) Remove the vane pump rotor.

21. REMOVE VANE PUMP SHAFT (TYPE A VANE PUMP)

22. REMOVE W/PULLEY SHAFT SUB−ASSY (TYPE B VANE PUMP)

23. REMOVE PUMP BRACKET FRONT

(a) Remove the bolt, pump bracket front from the vane pump housing front.

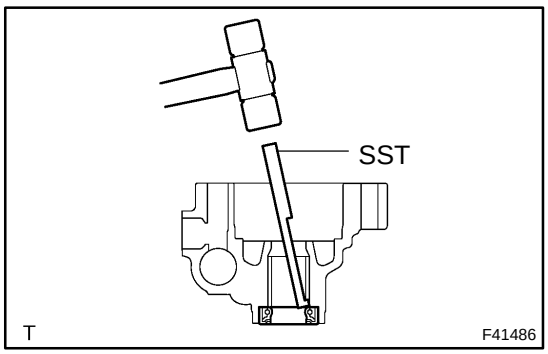

24. REMOVE VANE PUMP HOUSING OIL SEAL

(a) Using SST and a hammer, tap out the vane pump housing oil seal from the vane pump housing front.

SST 09631−10030

NOTICE:

Be careful not to damage the bushing of the vane pump housing front.

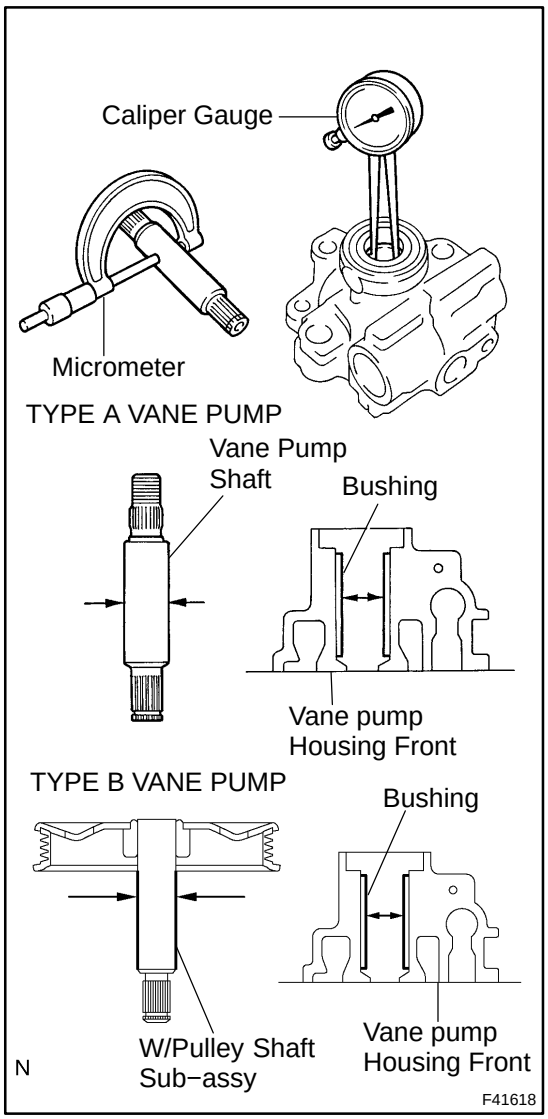

25. INSPECT OIL CLEARANCE

(a) Using a micrometer and a caliper gauge, measure the oil clearance.

Standard clearance:
0.027 − 0.054 mm (0.00106 − 0.00213 in.)
Maximum clearance: 0.07 mm (0.0028 in.)

If it is more than the maximum, replace the vane pump assy.

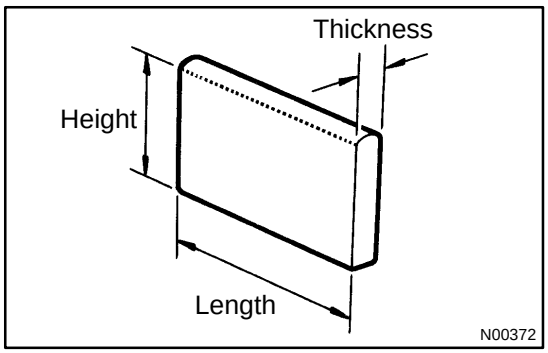

26. INSPECT VANE PUMP ROTOR AND VANE PUMP PLATES

(a) Using a micrometer, measure the height, thickness and length of the vane pump plates.

Minimum height: 8.7 mm (0.343 in.)
Minimum thickness: 1.4 mm (0.055 in.)
Minimum length: 14.991 mm (0.59020 in.)

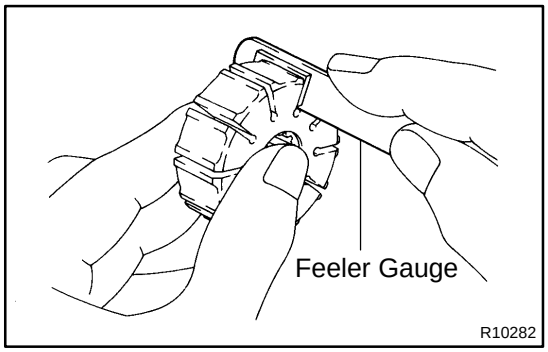

(b) Using a feeler gauge, measure the clearance between the vane pump rotor groove and vane pump plate.

Maximum clearance: 0.03 mm (0.0012 in.)

If it is more than the maximum, replace the vane pump assy.

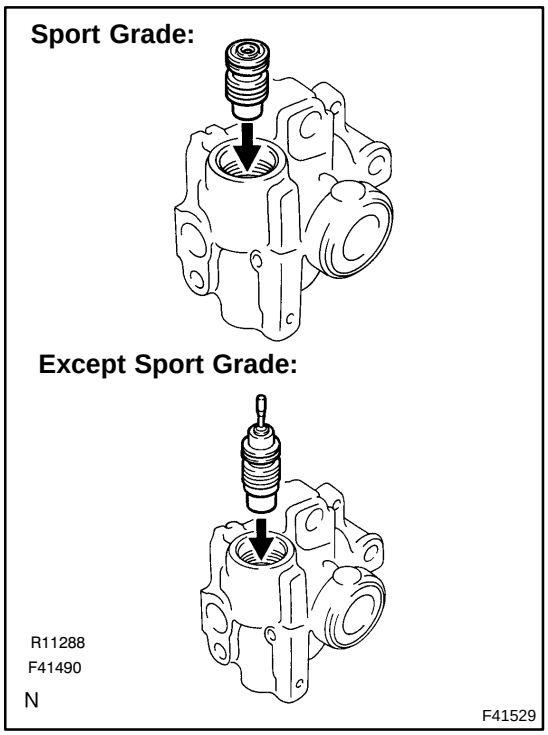

27. INSPECT FLOW CONTROL VALVE

(a) Coat the flow control valve with power steering fluid and check that it falls smoothly into the flow control valve hole by its own weight.

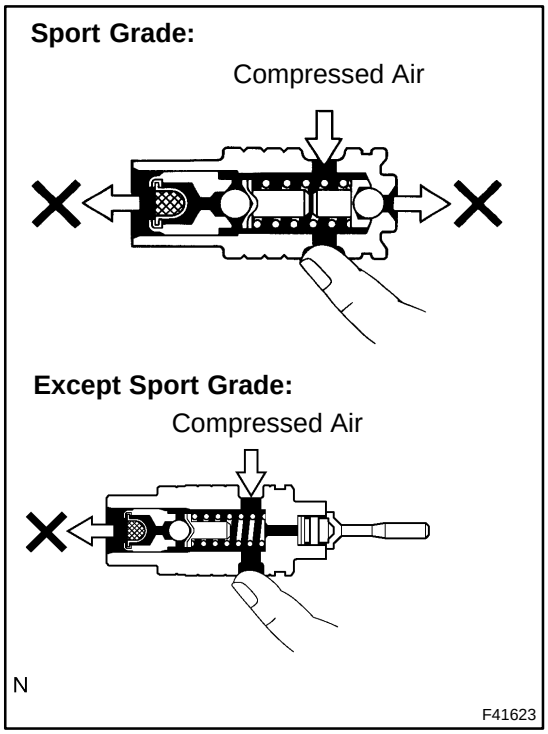

(b) Check the flow control valve for leakage. Close one of the holes and apply compressed air of 392 − 490 kPa (4 − 5 kgf/cm^2, 57 − 71 psi) into the opposite side hole, and confirm that air does not come out from the end holes.

If necessary, replace the vane pump assy.

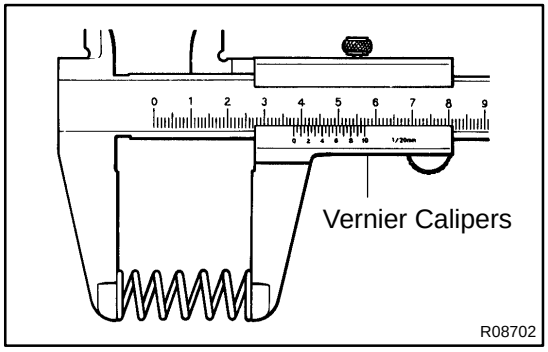

28. INSPECT FLOW CONTROL VALVE COMPRESSION SPRING

(a) Using vernier calipers, measure the free length of the flow control valve compression spring.

Minimum free length: 32.24 mm (1.2693 in.)

If it is not within the specification, replace the vane pump assy.

29. INSPECT PRESSURE PORT UNION

If the union seat in the pressure port union is remarkably damaged and it may cause fluid leakage, replace the vane pump assy.

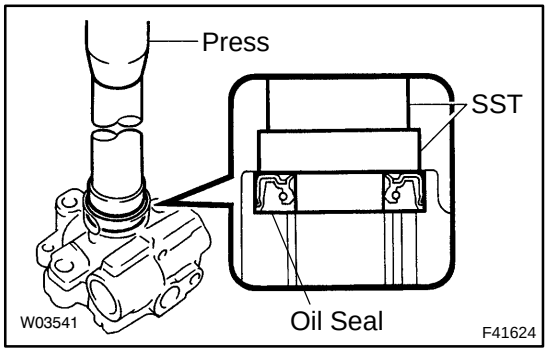

30. INSTALL VANE PUMP HOUSING OIL SEAL

(a) Coat a new vane pump housing oil seal lip with power steering fluid.

(b) Using SST and a press, install the new vane pump housing oil seal.

SST 09950−60010 (09951−00330), 09950−70010 (09951−07100)

NOTICE:

Make sure that the vane pump housing oil seal is installed facing the correct direction.

31. INSTALL PUMP BRACKET FRONT

(a) Install the pump bracket front with the bolt.

Torque:

Type A Vane Pump: 43 N·m (438 kgf·cm, 32 ft·lbf)

Type B Vane Pump: 44 N·m (449 kgf·cm, 32 ft·lbf)

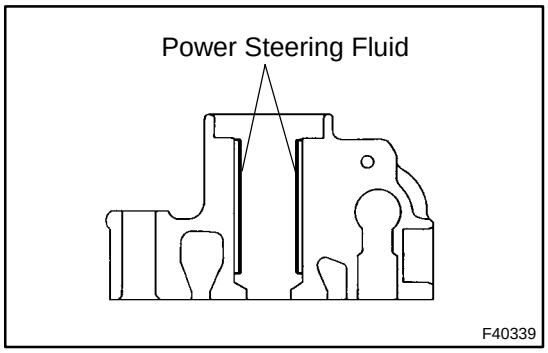

32. INSTALL VANE PUMP SHAFT (TYPE A VANE PUMP)

(a) Coat inside bushing surface of the vane pump housing front with power steering fluid.

(b) Gradually insert the vane pump shaft from the pulley side.

NOTICE:

Do not damage the vane pump housing oil seal lip in the vane pump housing front.

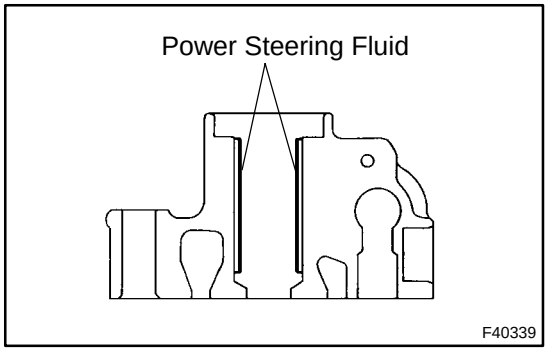

33. INSTALL W/PULLEY SHAFT SUB−ASSY (TYPE B VANE PUMP)

(a) Coat inside bushing surface of the vane pump housing front with power steering fluid.

(b) Gradually insert the w/pulley shaft sub−assy from the pulley side.

NOTICE:

Do not damage the vane pump housing oil seal lip in the vane pump housing front.

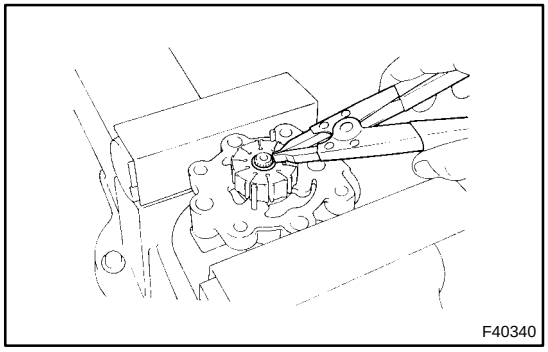

34. INSTALL VANE PUMP ROTOR

(a) Install the vane pump rotor.

(b) Using a shaft snap ring expander, install a new vane pump shaft snap ring to the vane pump shaft.

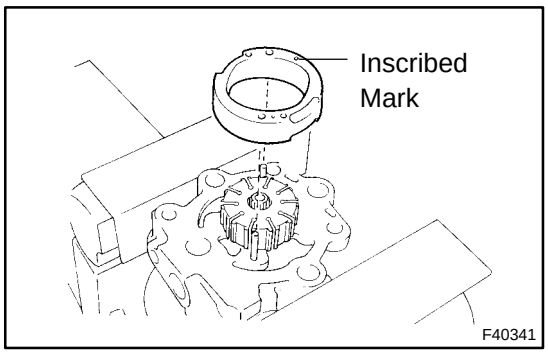

35. INSTALL VANE PUMP CAM RING

(a) Align the holes of the vane pump cam ring with 2 straight pins, and install the vane pump cam ring with inscribed mark facing outward.

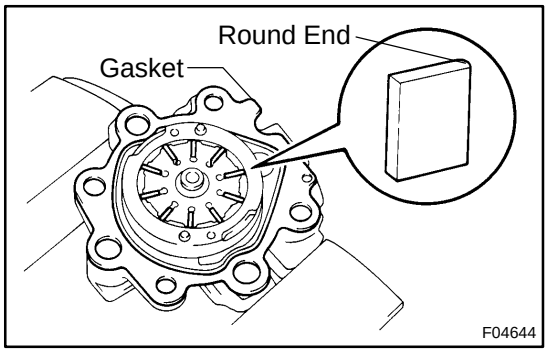

(b) Coat 10 vane pump plates with power steering fluid.
(c) Install the vane pump plates with the round end facing outward.
(d) Install a new gasket.

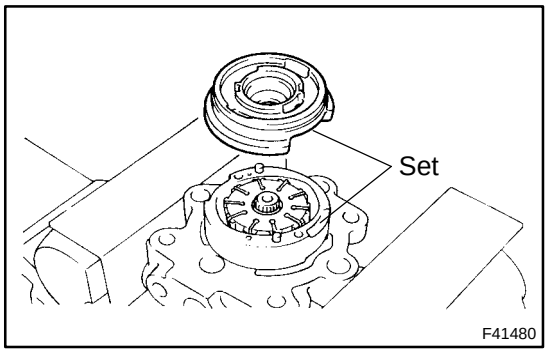

36. INSTALL VANE PUMP SIDE PLATE REAR

(a) Coat a new O−ring with power steering fluid and install it to the vane pump side plate rear.
(b) Align the groove of the vane pump cam ring with that of the vane pump side plate rear, install the vane pump side plate rear.

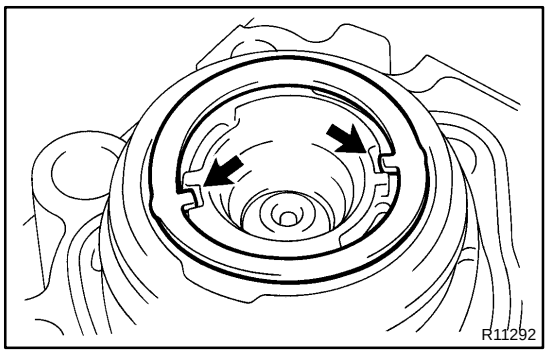

(c) Install the wave washer so that its protrusions fit into the slots in the vane pump side plate rear.

37. INSTALL VANE PUMP HOUSING REAR

(a) Coat a new O−ring with power steering fluid and install it to the vane pump housing rear.
(b) Install the vane pump housing rear with the 4 bolts.
Torque: 24 N·m (245 kgf·cm, 18 ft·lbf)

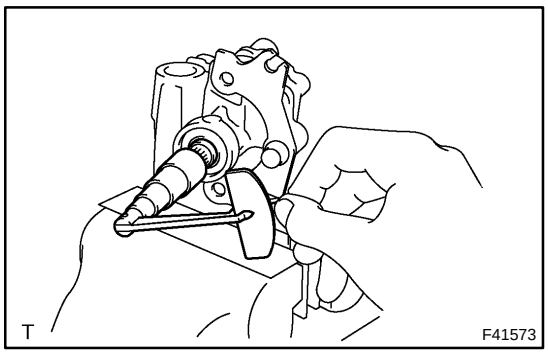

38. MEASURE VANE PUMP ROTATION TORQUE (TYPE A VANE PUMP)

(a) Check that the vane pump rotates smoothly without abnormal noise.

(b) Temporarily install the pulley set nut.

(c) Using a torque wrench, check the vane pump rotating torque.

Rotating torque:
0.27 N·m (2.8 kgf·cm, 2.4 in.·lbf) or less

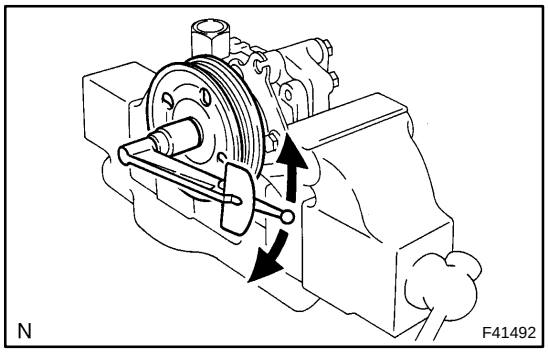

39. MEASURE VANE PUMP ROTATION TORQUE (TYPE B VANE PUMP)

(a) Check that the vane pump rotates smoothly without abnormal noise.

(b) Temporarily install the service bolt.

Recommended service bolt:
Thread diameter: 10 mm (0.39 in.)
Thread pitch: 1.25 mm (0.0492 in.)
Bolt length: 50 mm (1.97 in.)

(c) Using a torque wrench, check the vane pump rotating torque.

Rotating torque:
0.27 N·m (2.8 kgf·cm, 2.4 in.·lbf) or less

40. INSTALL VANE PUMP BRACKET REAR (TYPE A VANE PUMP)

(a) Install the vane pump bracket rear with the 2 bolts.
Torque: 43 N·m (438 kgf·cm, 32 ft·lbf)

41. INSTALL VANE PUMP BRACKET REAR (TYPE B VANE PUMP)

(a) Install the vane pump bracket rear with the 2 bolts and 2 nuts.
Torque: 44 N·m (449 kgf·cm, 32 ft·lbf)

42. INSTALL FLOW CONTROL VALVE COMPRESSION SPRING

(a) Coat the flow control valve compression spring with power steering fluid and install it.

43. INSTALL FLOW CONTROL VALVE

(a) Coat the flow control valve with power steering fluid.

(b) Install the flow control valve.

44. INSTALL PRESSURE PORT UNION

(a) Coat a new O−ring with power steering fluid and install it to the pressure port union.

(b) Install the pressure port union.
Torque: 83 N·m (846 kgf·cm, 61 ft·lbf)

45. INSTALL POWER STEERING SUCTION PORT UNION

(a) Coat a new O−ring with power steering fluid and install it to the power steering suction port union.

(b) Install the power steering suction port union with the bolt.
Torque: 13 N·m (133 kgf·cm, 10 ft·lbf)

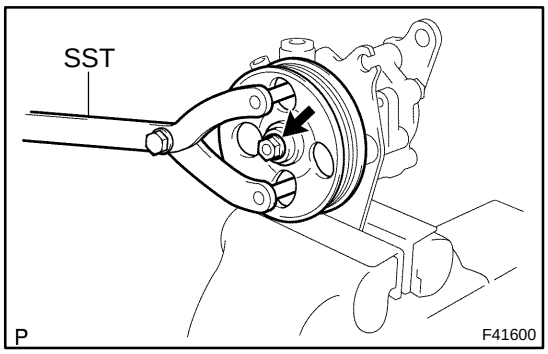

46. INSTALL VANE PUMP PULLEY (TYPE A VANE PUMP)

(a) Install the vane pump pulley to the vane pump shaft.

(b) Using SST, stop the vane pump pulley rotation and install the nut.

SST 09960−10010 (09962−01000, 09963−01000)

Torque: 44 N·m (449 kgf·cm, 32 ft·lbf)

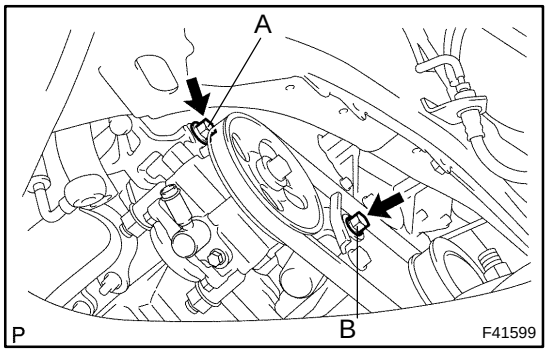

47. INSTALL VANE PUMP ASSY

(a) Temporarily install the vane pump assy with the 2 (A and B) bolts.

48. INSTALL VANE PUMP V BELT

(a) Install the vane pump V belt and adjust the V belt tension (See page 14−136).

(b) Torque the bolt A.

Torque: 43 N·m (438 kgf·cm, 32 ft·lbf)

(c) Torque the bolt B.

Torque: 43 N·m (438 kgf·cm, 32 ft·lbf)

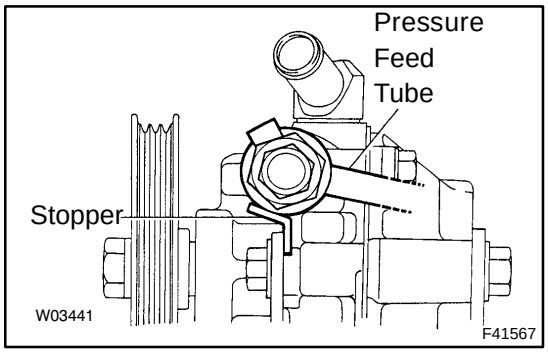

49. CONNECT PRESSURE FEED HOSE

(a) Using a spanner (24 mm) to hold the pressure port union, connect the pressure feed tube assy with the union bolt and a new gasket.

Torque: 51.5 N·m (525 kgf·cm, 38 ft·lbf)

HINT:

Make sure the stopper of the pressure feed tube touches the front bracket as shown in the illustration, then install the union bolt.

50. INSTALL POWER STEERING OIL PRESSURE SWITCH

(a) Install the power steering oil pressure switch to the union bolt.

Torque: 21 N·m (214 kgf·cm, 15 ft·lbf)

NOTICE:

Be careful not to prevent oil from being attached to the connector.

(b) Connect the connector.

51. CONNECT OIL RESERVOIR TO PUMP HOSE NO.1

(a) Connect the oil reservoir to pump hose No.1.

(b) Install the clip.

52. INSTALL FRONT FENDER APRON SEAL RH

53. INSTALL FRONT FENDER LINER RH

54. INSTALL FRONT WHEEL RH

Torque: 103 N·m (1,050 kgf·cm, 76 ft·lbf)

55. BLEED POWER STEERING FLUID (See page 51−3)

56. INSPECT FLUID LEAK

RACK & PINION POWER STEERING GEAR ASSY

5105R−03

COMPONENTS

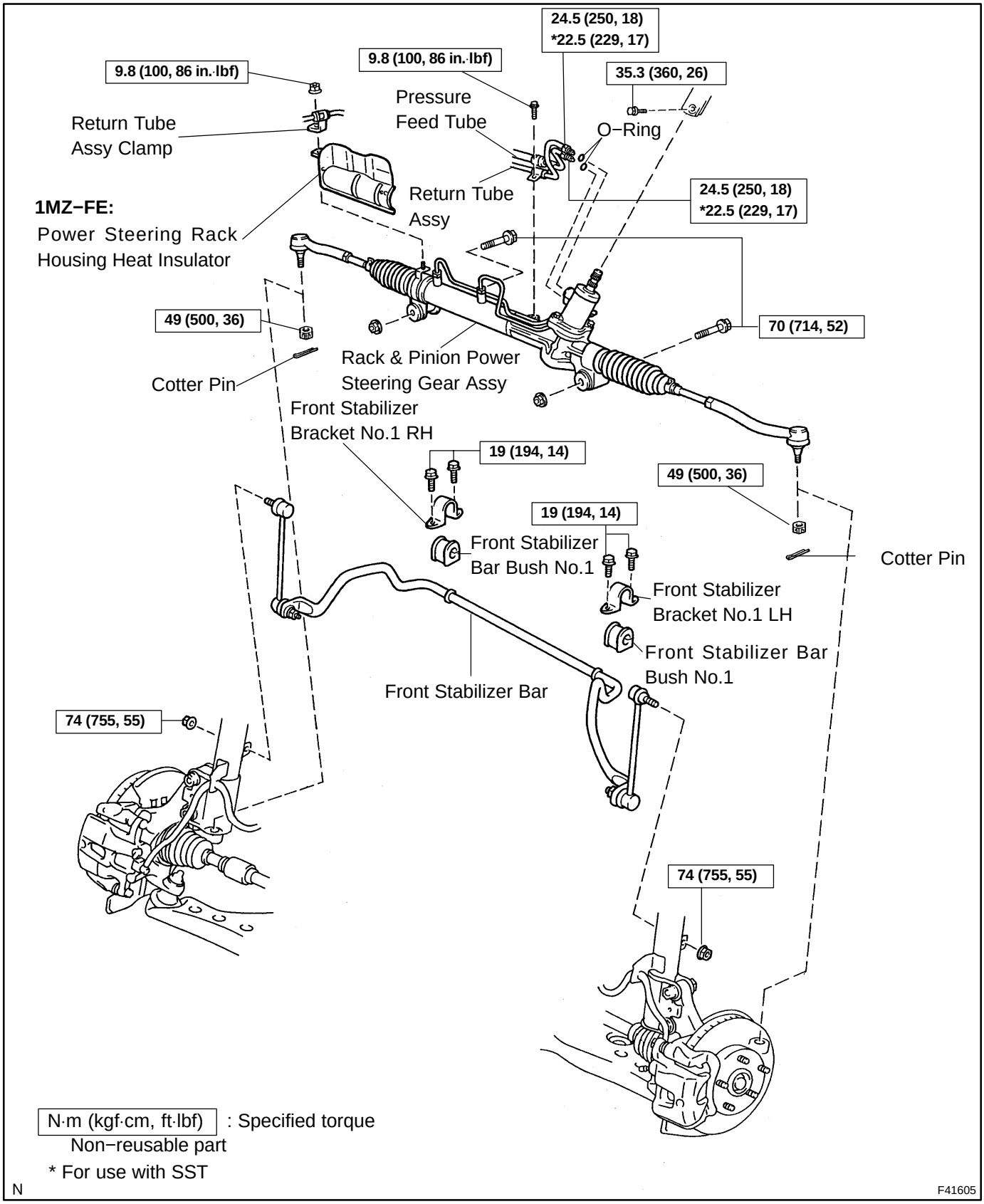

RACK & PINION POWER STEERING GEAR ASSY:

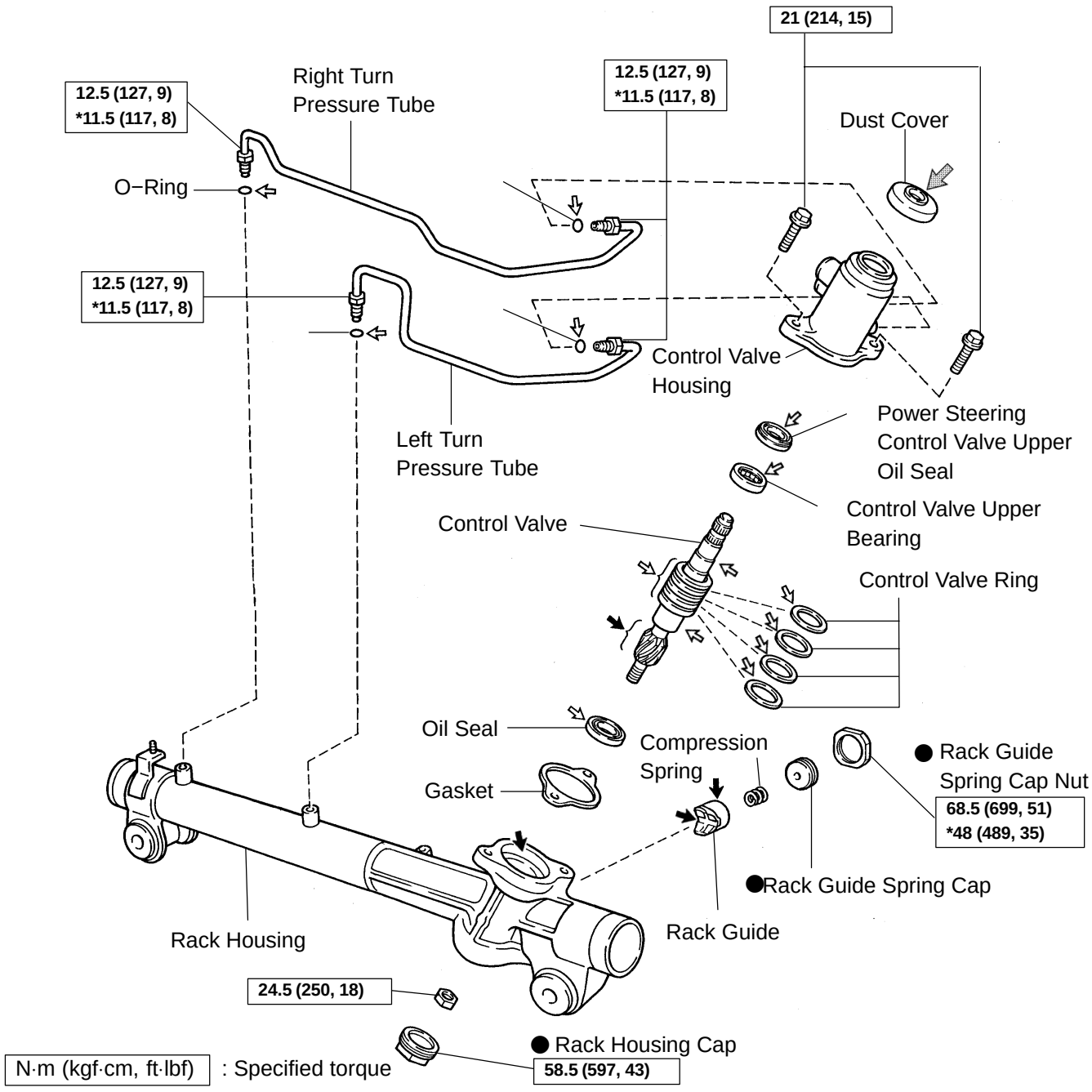

N·m (kgf·cm, ft·lbf) : Specified torque

Non−reusable part

● Precoated part

⬅ Molybdenum disulfide lithium base grease

⇦ Power steering fluid

⇦ MP grease

* For use with SST

N

F41889

RACK & PINION GEAR POWER STEERING GEAR ASSY:

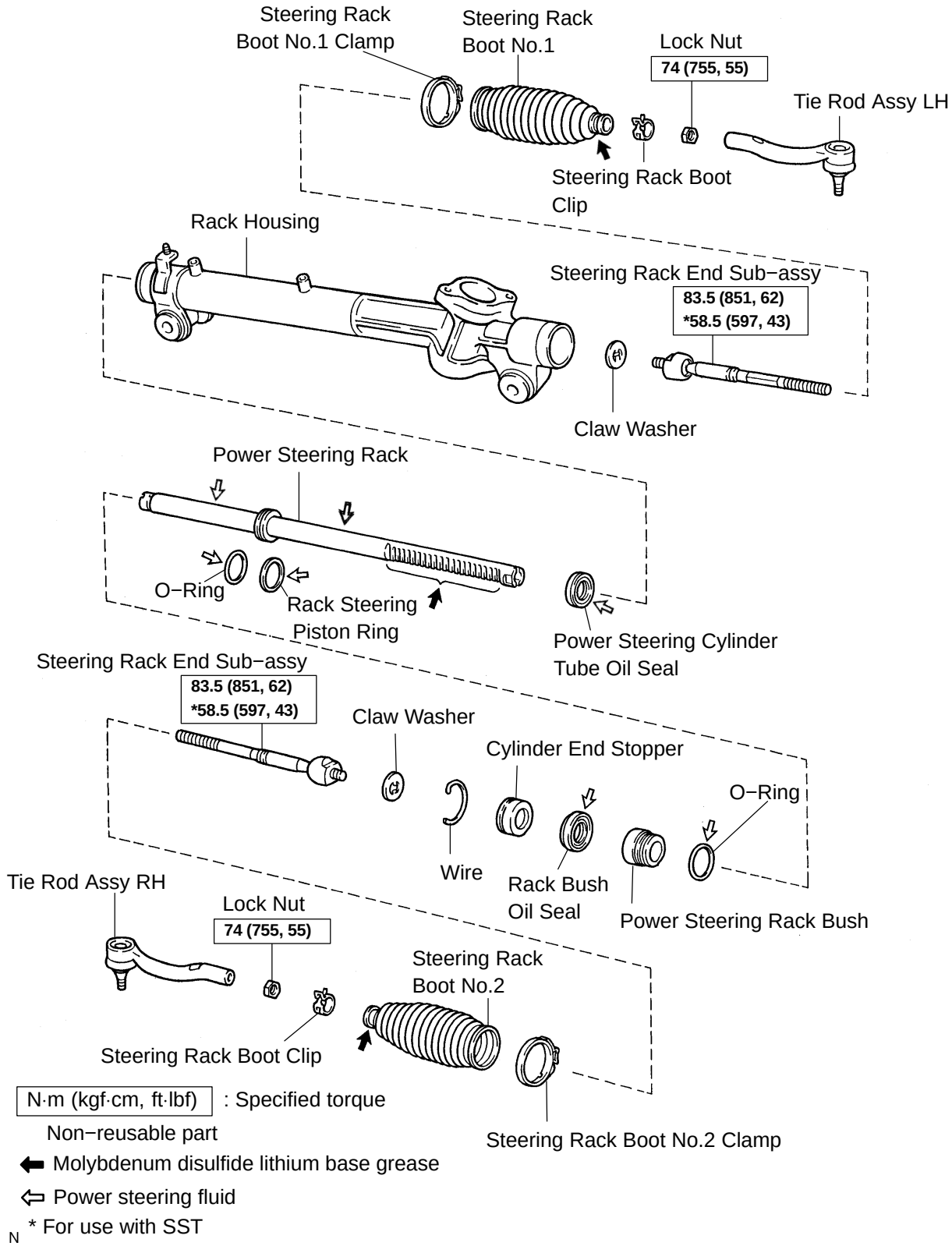

N·m (kgf·cm, ft·lbf) : Specified torque

Non−reusable part

⬅ Molybdenum disulfide lithium base grease

⇦ Power steering fluid

N * For use with SST

F41890

5105S−06

OVERHAUL

NOTICE:

When installing , coat the parts indicated by the arrow with power steering fluid or molybdenum disulfide lithium base grease (See page 51−25).

1. **PRECAUTION(See page 60−1)**
2. **DISCONNECT BATTERY NEGATIVE TERMINAL**
3. **REMOVE HORN BUTTON ASSY(See page 50−9, 50−21)**
4. **REMOVE STEERING WHEEL ASSY(See page 50−9, 50−21)**
   SST 09950−50013 (09951−05010, 09952−05010, 09953−05020, 09954−05021)
5. **REMOVE FRONT WHEEL**
6. **REMOVE SPIRAL CABLE SUB−ASSY(See page 50−9, 50−21)**

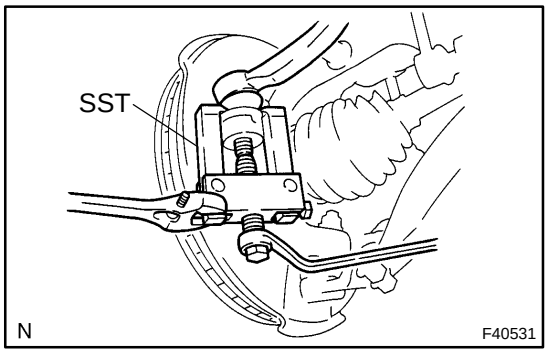

7. **DISCONNECT TIE ROD ASSY LH**

(a) Remove the cotter pin and nut.

(b) Using SST, remove the tie rod assy LH from the steering knuckle.
SST 09628−62011

8. **DISCONNECT TIE ROD ASSY RH**
   SST 09628−62011

HINT:

Remove the RH side by the same procedures with LH side.

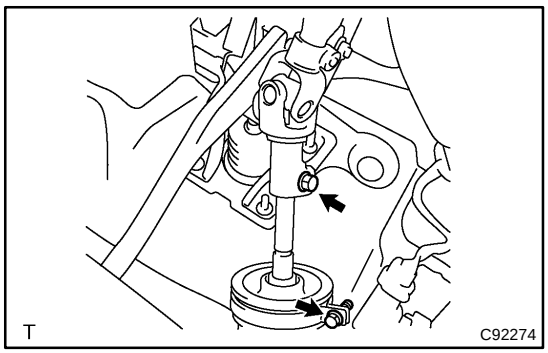

9. **DISCONNECT STEERING INTERMEDIATE SHAFT SUB−ASSY**

(a) Loosen the bolt and remove the clamp from the steering column hole cover No.1.

(b) Disconnect the steering column hole cover No.2 from the steering column hole cover No.1.

(c) Loosen the bolt.

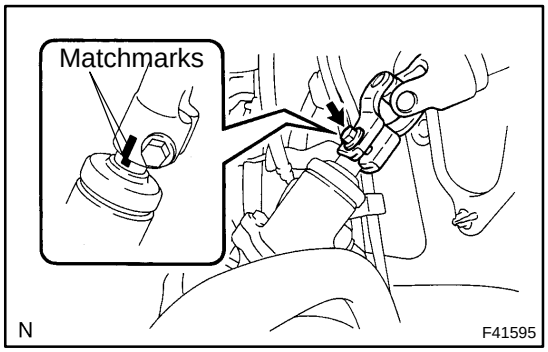

(d) Place matchmarks on the steering intermediate shaft sub−assy and rack & pinion power steering gear assy.

(e) Remove the bolt and separate the steering intermediate shaft sub−assy.

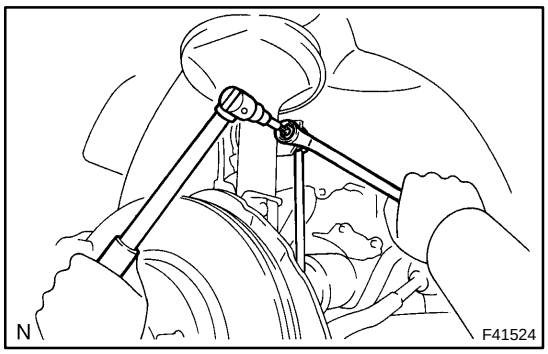

10. DISCONNECT FRONT STABILIZER LINK ASSY LH

(a) Remove the nut and disconnect the front stabilizer link assy from the absorber.

HINT:

If the ball joint turns together with the nut, use a hexagon wrench (6 mm) to hold the stud.

11. DISCONNECT FRONT STABILIZER LINK ASSY RH

HINT:

Remove the RH side by the same procedures with LH side.

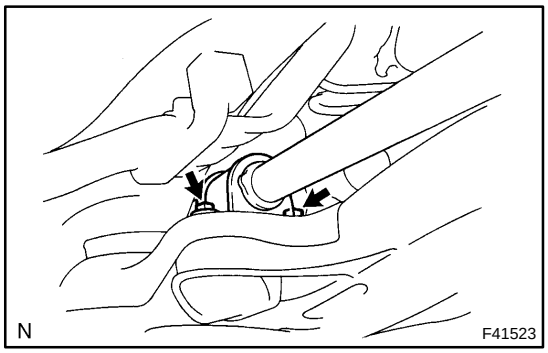

12. REMOVE FRONT STABILIZER BRACKET NO.1 LH

(a) Remove the 2 bolts and disconnect the front stabilizer bracket No.1 LH.

13. REMOVE FRONT STABILIZER BRACKET NO.1 RH

HINT:

Remove the RH side by the same procedures with LH side.

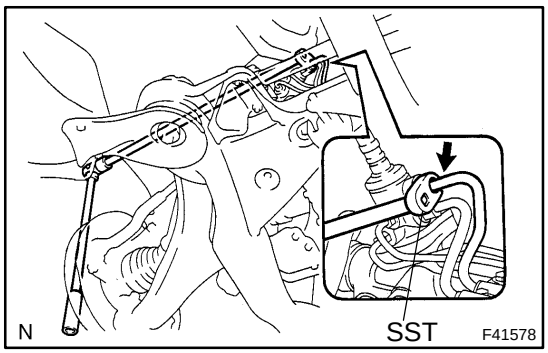

14. DISCONNECT PRESSURE FEED TUBE ASSY

(a) Using SST, disconnect the return tube assy from the rack & pinion power steering gear assy.
SST 09023−12701

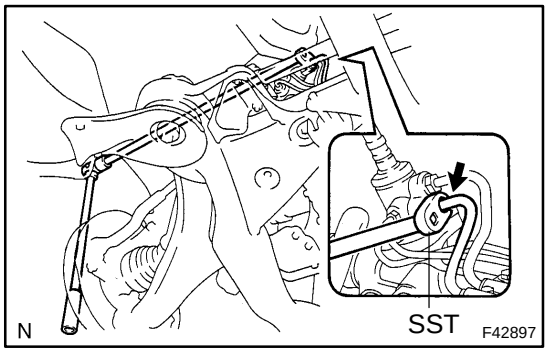

(b) Using SST, disconnect the pressure feed tube assy from the rack & pinion power steering gear assy.
SST 09023−12701

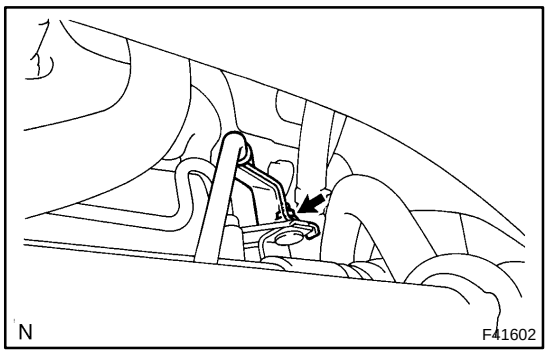

(c) Remove the nut and disconnect the return tube clamp.

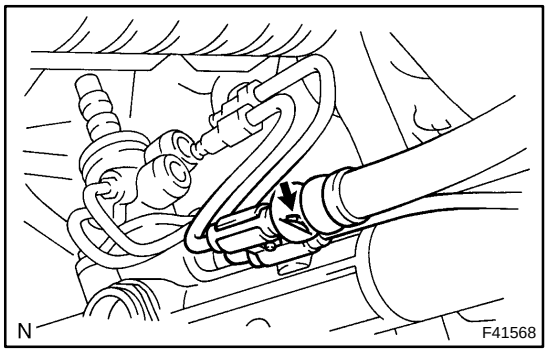

15. REMOVE RACK & PINION POWER STEERING GEAR ASSY

(a) Remove the bolt and disconnect the tube clamp.

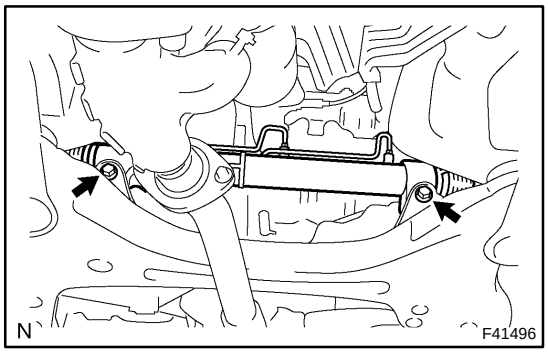

(b) Remove the 2 bolts, nuts and rack & pinion power steering gear assy.

16. REMOVE POWER STEERING RACK HOUSING HEAT INSULATOR (1MZ−FE ENGINE TYPE)

(a) Remove the power steering rack housing heat insulator.

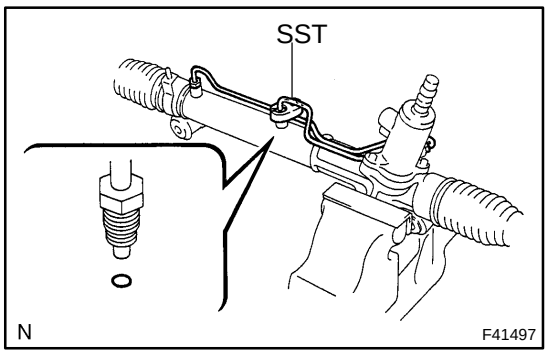

17. REMOVE STEERING LEFT TURN PRESSURE TUBE

(a) Using SST, renove the left turn pressure tube.
SST 09023−38201

(b) Remove the 2 O−rings from the left turn pressure tube.

18. REMOVE STEERING RIGHT TURN PRESSURE TUBE

(a) Using SST, renove the right turn pressure tube.
SST 09023−38201

(b) Remove the 2 O−rings from the right turn pressure tube.

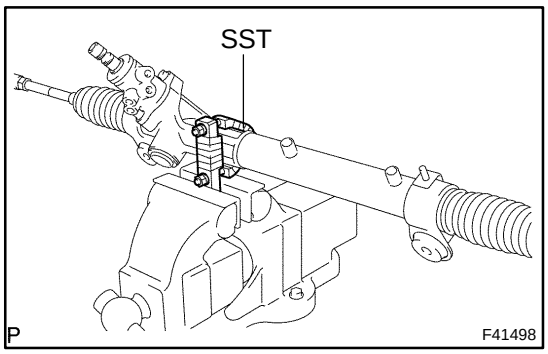

19. FIX RACK & PINION POWER STEERING GEAR ASSY

(a) Using SST, secure the rack & pinion power steering gear assy.
SST 09612−00012

HINT:
Tape the SST before use.

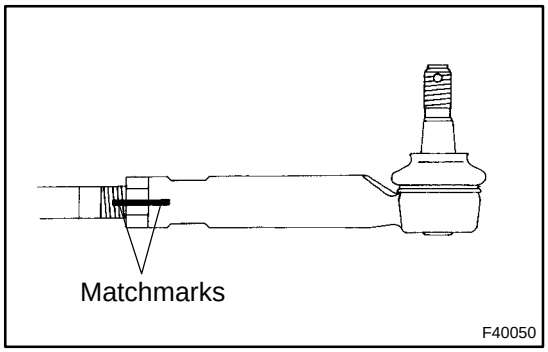

20. REMOVE TIE ROD ASSY LH

(a) Place matchmarks on the tie rod assy LH and steering rack end sub−assy.
(b) Loosen the lock nut, and remove the tie rod assy LH and lock nut.

21. REMOVE TIE ROD ASSY RH

HINT:
Remove the RH side by the same procedures with LH side.

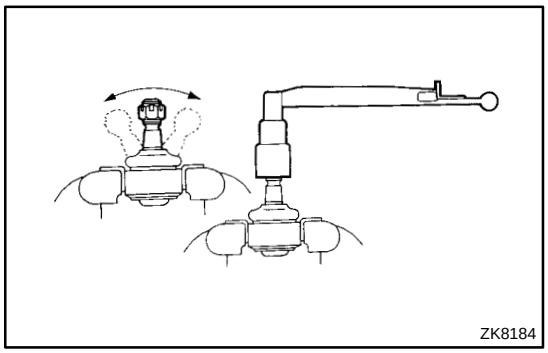

22. INSPECT TIE ROD ASSY LH

(a) Secure the tie rod assy LH in a vise.
(b) Install the nut to the stud bolt.
(c) Flip the ball joint stud back and forth 5 times.
(d) Using a torque wrench, turn the nut continuously at a rate of 3 − 5 seconds per 1 turn and take the torque reading of the 5th turn.
Turning torque:
0.83 − 3.43 N·m (8.5 − 35.0 kgf·cm, 7.3 − 30.4 in.·lbf)

23. INSPECT TIE ROD ASSY RH

HINT:
Remove the RH side by the same procedures with LH side.

24. REMOVE STEERING RACK BOOT CLIP

(a) Remove the 2 steering rack boot clips.

25. REMOVE STEERING RACK BOOT NO.2 CLAMP

(a) Using pliers, remove the steering rack boot No.2 clamp.

NOTICE:
Be careful not to damage the steering rack boot No.2.

26. REMOVE STEERING RACK BOOT NO.1 CLAMP

HINT:
Remove the steering rack boot No.1 clamp by the same procedures with the steering rack boot No.2 clamp.

NOTICE:
Be careful not to damage the steering rack boot No.1.

27. REMOVE STEERING RACK BOOT NO.2

(a) Remove the steering rack boot No.2.

28. REMOVE STEERING RACK BOOT NO.1

HINT:

Remove the steering rack boot No.1 by the same procedures with the steering rack boot No.2.

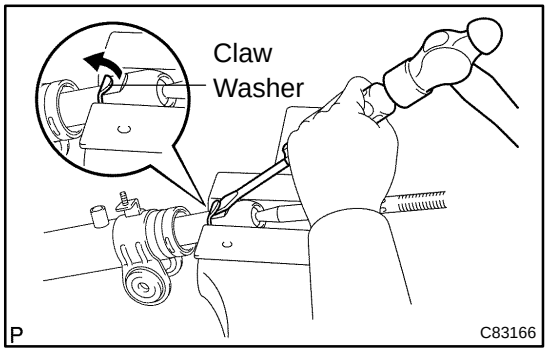

29. REMOVE STEERING RACK END SUB−ASSY

(a) Using a screwdriver and a hammer, unstake the claw washer.

NOTICE:

Avoid any impact to the power steering rack.

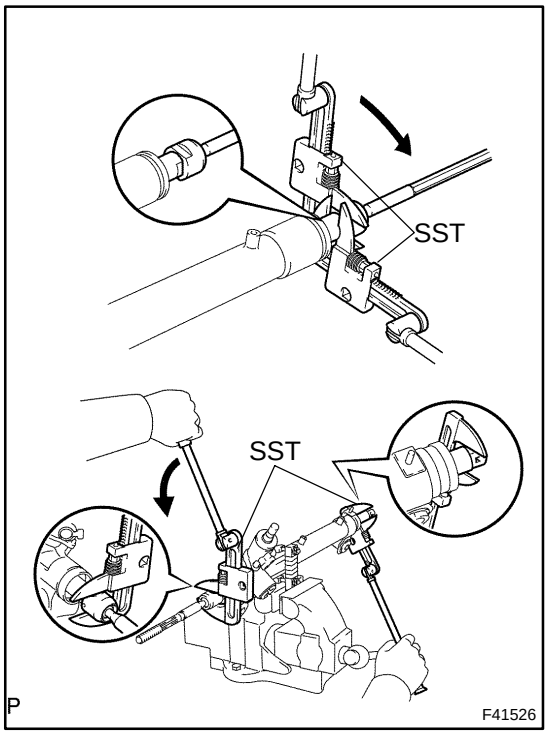

(b) Using 2 SSTs, remove the 2 steering rack ends sub−assy and 2 claw washers.

SST 09922−10010

NOTICE:

- **Use SST 09922−10010 in the direction shown in the illustration.**
- **Securely hold the power steering rack end with a SST.**

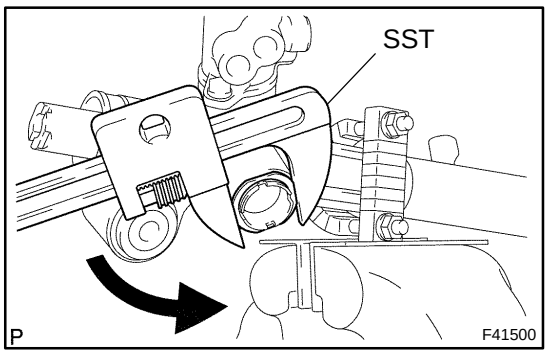

30. REMOVE RACK GUIDE

(a) Using SST, remove the rack guide spring cap nut.

SST 09922−10010

NOTICE:

Use SST 09922−10010 in the direction shown in the illustration.

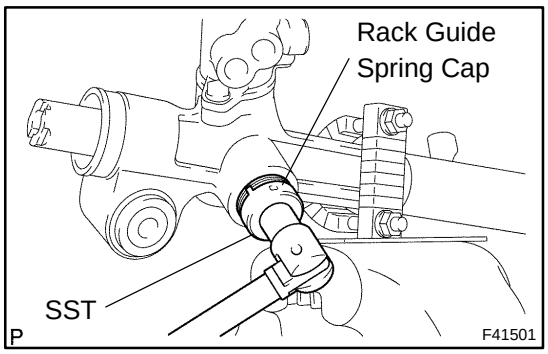

(b) Using SST, remove the rack guide spring cap.
SST 09631−10021
(c) Remove the compression spring and rack guide.

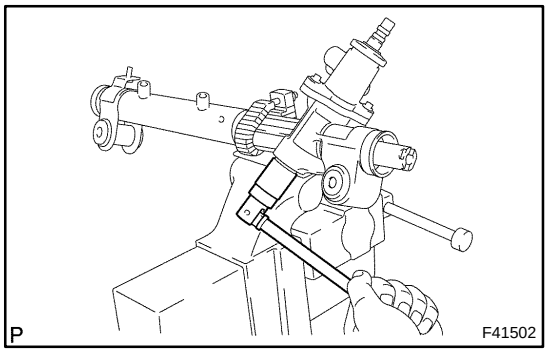

31. REMOVE POWER STEERING CONTROL VALVE
(a) Using a socket wrench (27 mm), remove the rack housing cap.

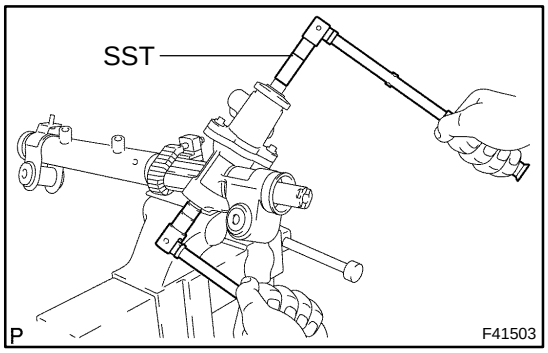

(b) Using SST, hold the control valve and remove the nut.
SST 09616−00011

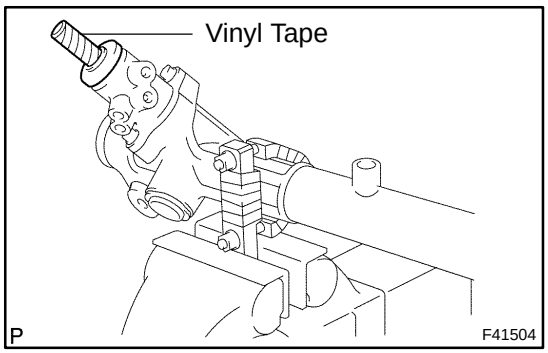

(c) Wind vinyl tape around the serrated part of the control valve.
(d) Remove the dust cover from the control valve housing.

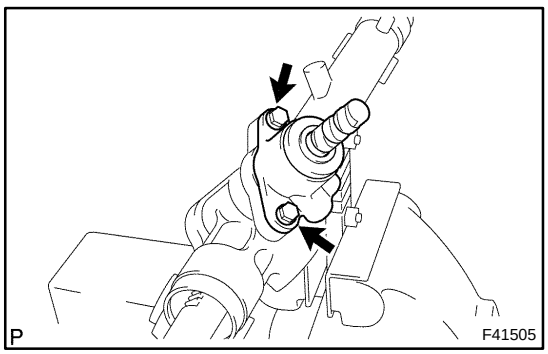

(e) Remove the 2 bolts and control valve.
(f) Remove the gasket.

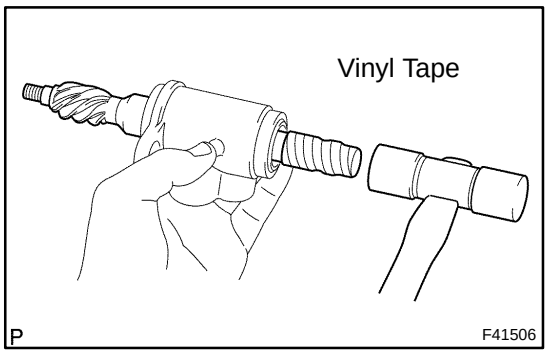

(g) To prevent oil seal lip damage, wind vinyl tape around the serrated part of the control valve.
(h) Using a plastic hammer, remove the control valve with oil seal from the control valve housing.
(i) Remove the oil seal from the control valve.

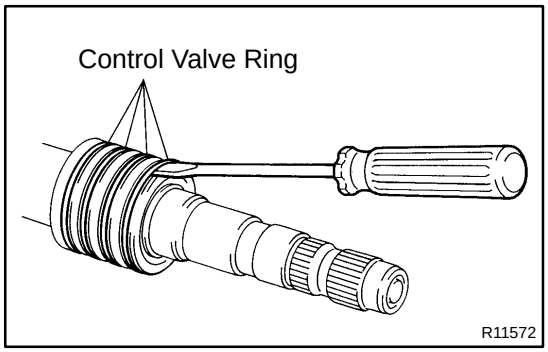

(j) Using a screwdriver, remove the 4 control valve rings.

NOTICE:

Be careful not to damage the grooves for the control valve rings.

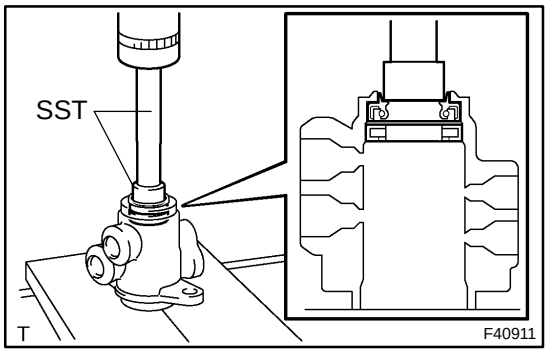

32. REMOVE POWER STEERING CONTROL VALVE UPPER OIL SEAL

(a) Using SST and a press, remove the control valve upper bearing and power steering control valve upper oil seal from the control valve housing.

SST 09950−70010 (09951−07150), 09950−60010 (09951−00250)

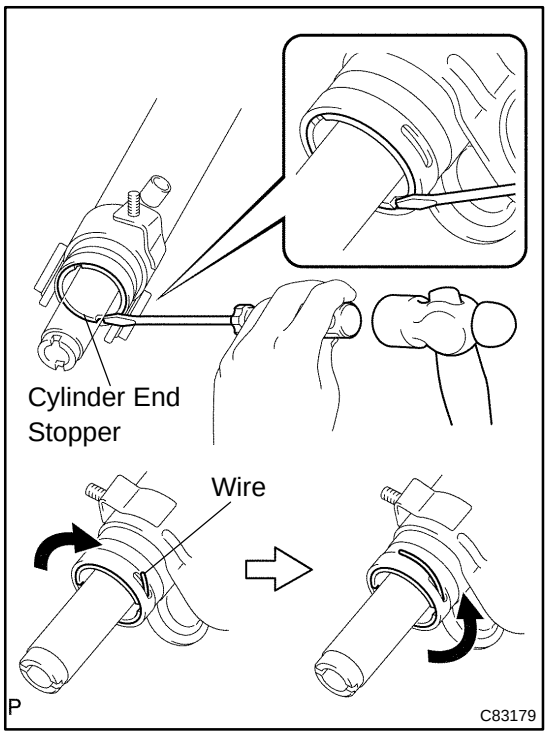

33. REMOVE CYLINDER END STOPPER

(a) Using a screwdriver and a hammer, turn the cylinder end stopper clockwise until the wire end is visible through the service hole.
(b) Using a screwdriver and a hammer, turn the cylinder end stopper counterclockwise, and remove the wire and cylinder end stopper.

34. REMOVE POWER STEERING RACK

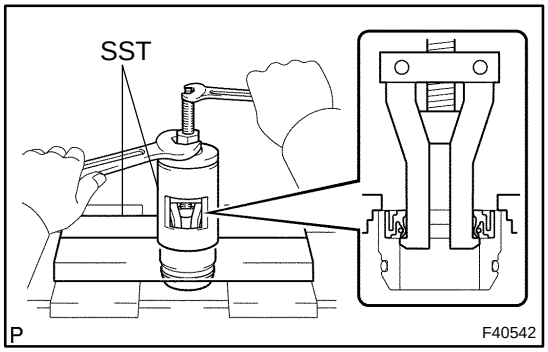

35. REMOVE POWER STEERING RACK BUSH

(a) Remove the power steering rack bush from the power steering rack.

(b) Using SST, remove the rack bush oil seal.
SST 09527−21011, 09612−24014 (09613−22011)

(c) Using a screwdriver, remove the O−ring from the power steering rack bush.

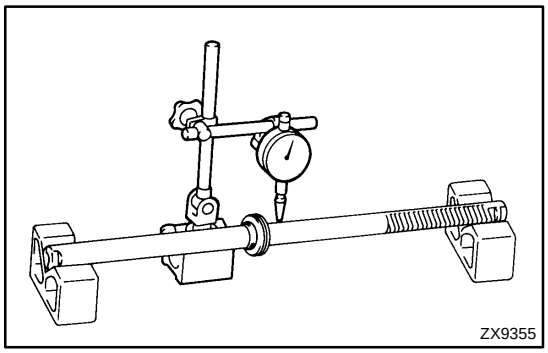

36. INSPECT POWER STEERING RACK

(a) Using a dial indicator, check the power steering rack for runout and for teeth wear and damage.
Maximum runout: 0.3 mm (0.012 in.)

(b) Check the back surface for wear and damage.

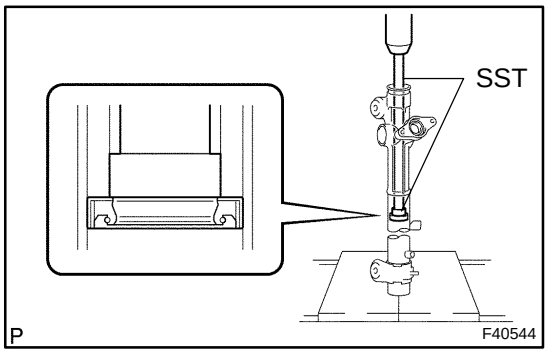

37. REMOVE POWER STEERING CYLINDER TUBE OIL SEAL

(a) Using SST and a press, remove the power steering cylinder tube oil seal.
SST 09950−70010 (09951−07360), 09950−60010 (09951−00290)

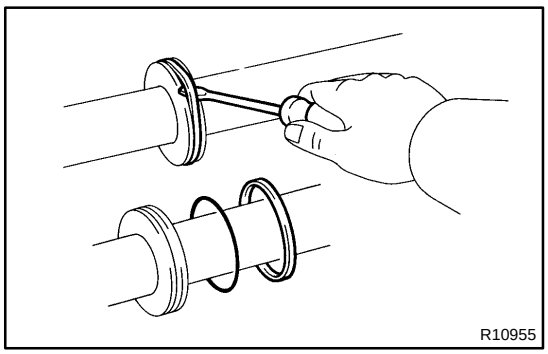

38. REMOVE RACK STEERING PISTON RING

(a) Using a screwdriver, remove the rack steering piston ring and O−ring.

NOTICE:
Be careful not to damage the grooves for rack steering piston ring.

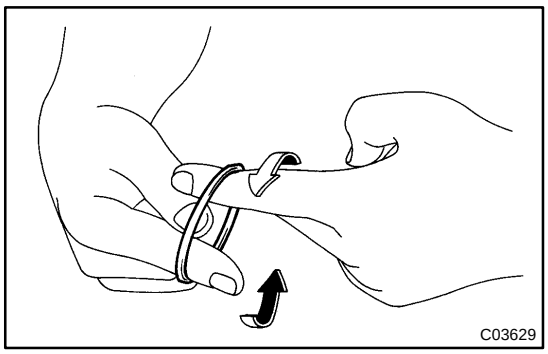

39. INSTALL RACK STEERING PISTON RING

(a) Coat a new O−ring with power steering fluid and install it to the power steering rack.

(b) Expand a new rack steering piston ring with your fingers.

NOTICE:

Be careful not to over expand the rack steering piston ring.

(c) Coat a new rack steering piston ring with power steering fluid.

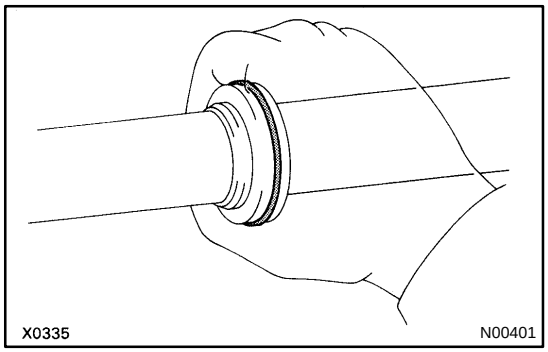

(d) Install the rack steering piston ring to the power steering rack, and settle it down with your fingers.

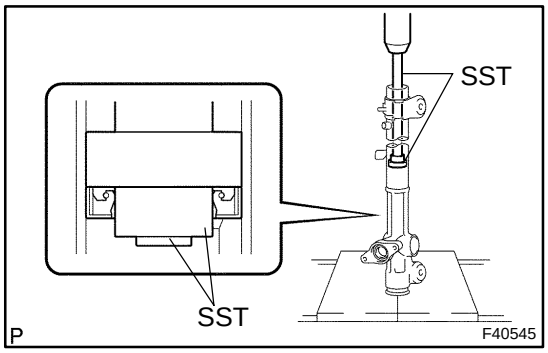

40. INSTALL POWER STEERING CYLINDER TUBE OIL SEAL

(a) Coat a new power steering cylinder tube oil seal lip with power steering fluid.

SST 09950−60010 (09951−00420, 09951−00250, 09952−06010), 09950−70010 (09951−07360)

(b) Using SST and a press, install the power steering cylinder tube oil seal.

NOTICE:

- **Make sure that the power steering cylinder tube oil seal is installed facing in the correct direction.**
- **Take care so that the power steering cylinder tube oil seal will not be reversed as you install it.**

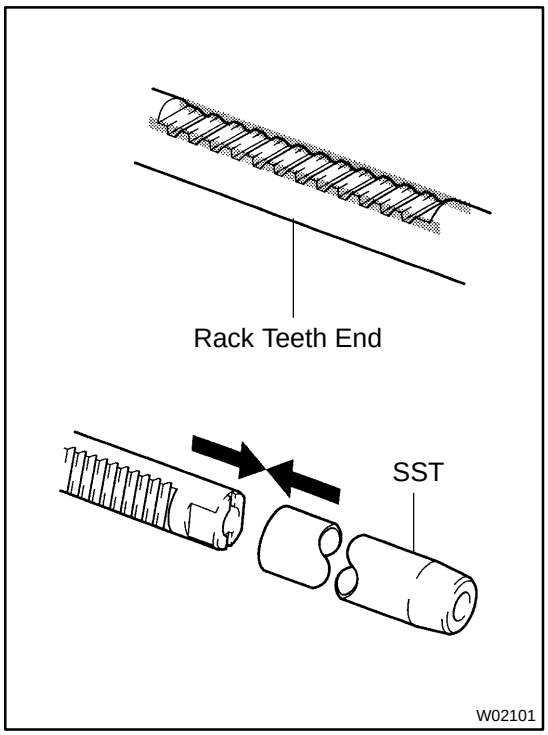

41. INSTALL POWER STEERING RACK

(a) Install SST to the power steering rack.
SST 09631−33010

HINT:

If necessary, scrape the burrs off the power steering rack teeth end and burnish.

(b) Coat the SST with power steering fluid.
(c) Install the power steering rack into the rack housing.
(d) Remove the SST.

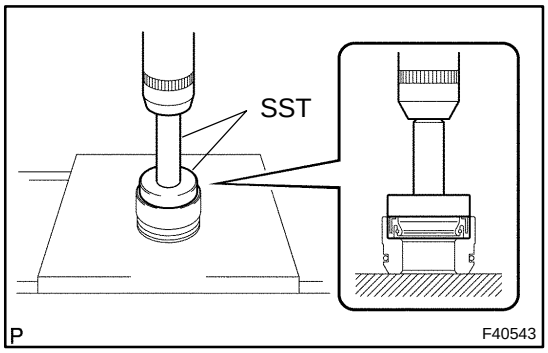

42. INSTALL POWER STEERING RACK BUSH

(a) Using SST and a press, install the rack bush oil seal to the power steering rack bush.
SST 09950−60010 (09951−00400), 09950−70010 (09951−07100)

NOTICE:

Make sure that the rack bush oil seal is installed facing in the correct direction.

(b) Coat a new O−ring with power steering fluid and install it to the power steering rack bush.
(c) To prevent rack bush oil seal lip damage, wind vinyl tape around the power steering rack end, and apply power steering fluid.
(d) Install the power steering rack bush to the power steering rack.

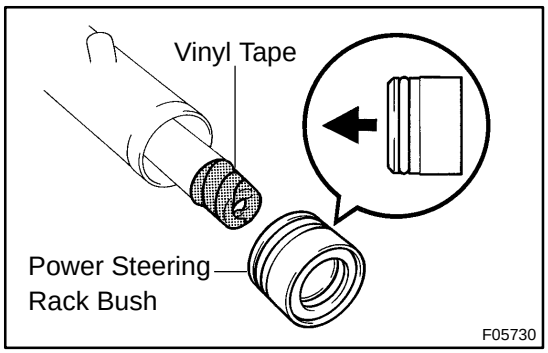

43. INSTALL CYLINDER END STOPPER

(a) Align the installation hole for the wire of the cylinder end stopper with the slot of the rack housing.
(b) Install a new wire into the cylinder end stopper.
(c) Using a screwdriver, turn the cylinder end stopper clockwise by 450 ± 50 .

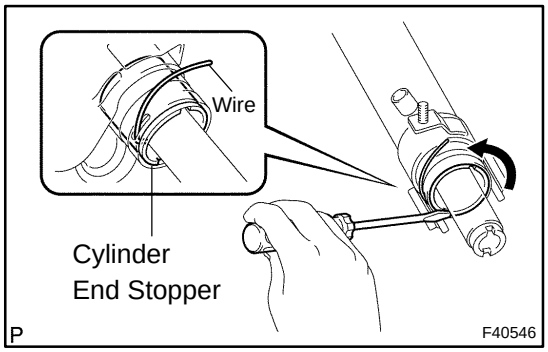

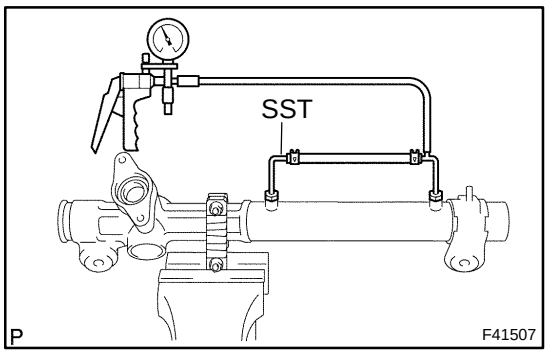

44. AIR TIGHTNESS TEST

(a) Install SST to the rack housing.
SST 09631−12071 (09633−00010)

(b) Apply vacuum of 53 kPa (400 mmHg, 15.75 in.Hg) for about 30 seconds.

(c) Check that there is no change in the vacuum.

If there is a change in the vacuum, check the installation of the oil seals.

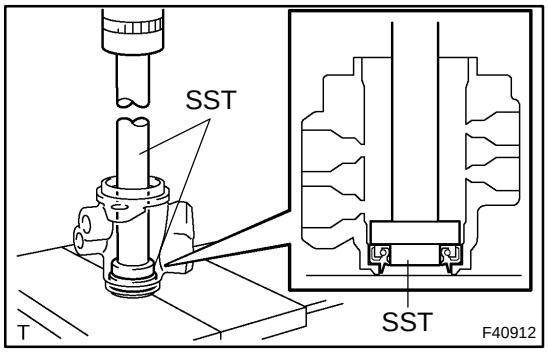

45. INSTALL POWER STEERING CONTROL VALVE UPPER OIL SEAL

(a) Coat a control valve upper bearing and a new power steering control valve upper oil seal with power steering fluid.

(b) Using SST and a press, install the power steering control valve upper oil seal.
SST 09950−70010 (09951−07150), 09950−60010 (09951−00180, 09952−06010, 09951−00320)

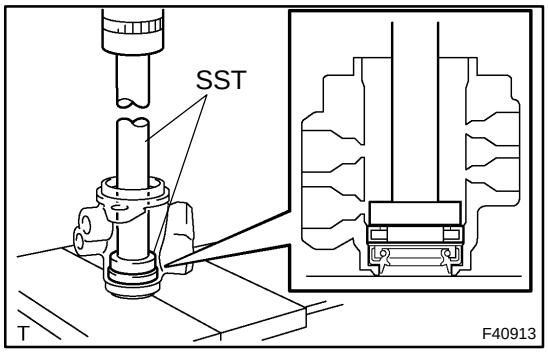

(c) Using SST and a press, install the control valve upper bearing.
SST 09950−70010 (09951−07150), 09950−60010 (09951−00180, 09952−06010, 09951−00340)

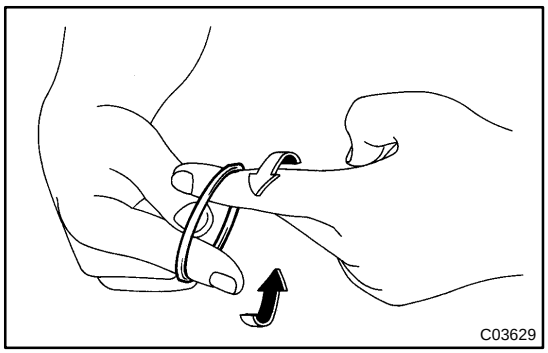

46. INSTALL POWER STEERING CONTROL VALVE

(a) Expand 4 new control valve rings with your fingers.

NOTICE:

Be careful not to over expand the control valve ring.

(b) Coat the 4 control valve rings with power steering fluid.

(c) Install the 4 control valve rings to the control valve, and settle them down with your fingers.

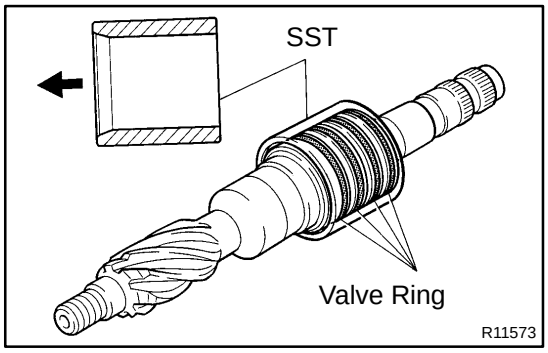

(d) Carefully slide the tapered end of SST over the control valve rings until they fit to the control valve.
SST 09631−22081

NOTICE:

Be careful not to damage the control valve rings.

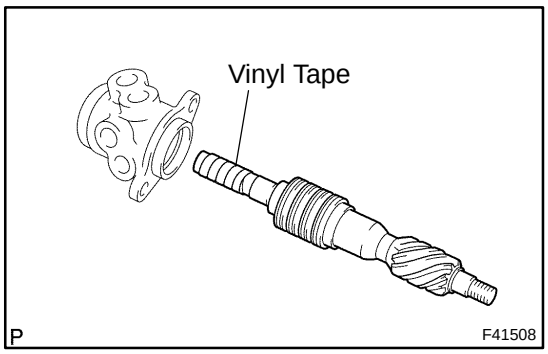

(e) To prevent power steering control valve upper oil seal lip damage, wind vinyl tape around the serrated part of the control valve.
(f) Coat the power steering control valve upper oil seal lip with power steering fluid.
(g) Install the control valve to the control valve housing.

NOTICE:

Be careful not to damage the control valve ring and power steering control valve upper oil seal lip.

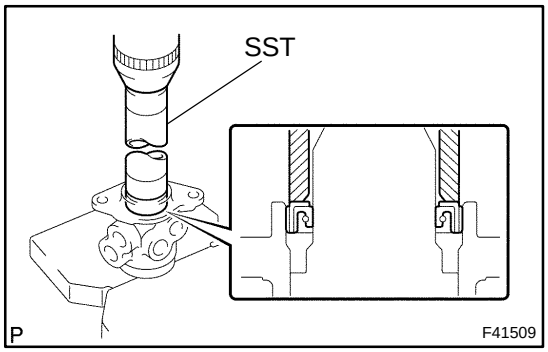

(h) Coat a new oil seal lip with power steering fluid.
(i) Using SST and a press, install the oil seal.
SST 09612−22011

NOTICE:

Make sure that the oil seal is installed facing in the correct direction.

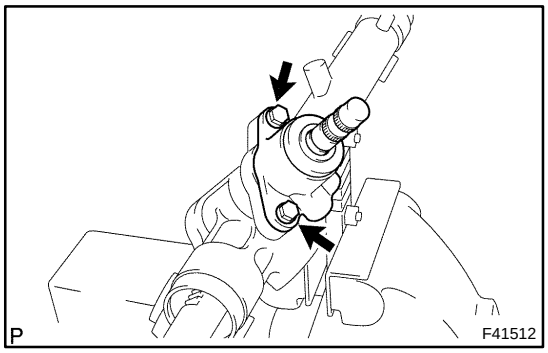

(j) Apply grease to the needle bearing.
(k) Install a new gasket to the control valve housing.
(l) Wind vinyl tape around the serration part of the control valve.
(m) Install the control valve housing to the rack housing with the 2 bolts.
Torque: 21 N·m (214 kgf·cm, 15 ft·lbf)

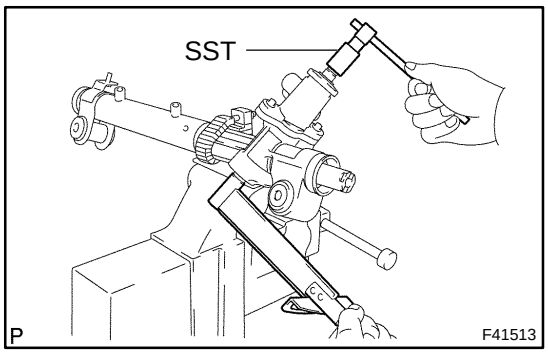

(n) Using SST, stop the control valve rotation and install a new lock nut.
Torque: 24.5 N·m (250 kgf·cm, 18 ft·lbf)
SST 09616−00011
(o) Apply sealant to 2 or 3 threads of the rack housing cap.
Sealant:
Part No. 08833−00080, THREE BOND 1344, LOCTITE 242 or equivalent

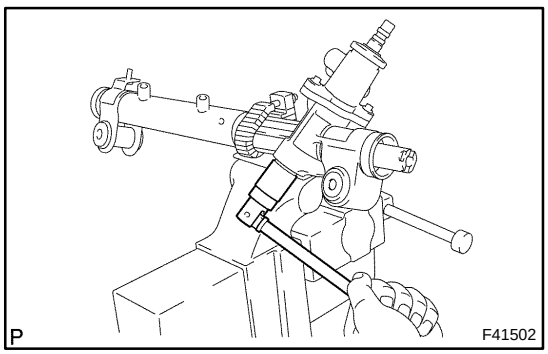

(p) Using a socket wrench (27 mm), install the rack housing cap.
Torque: 58.5 N·m (597 kgf·cm, 43 ft·lbf)

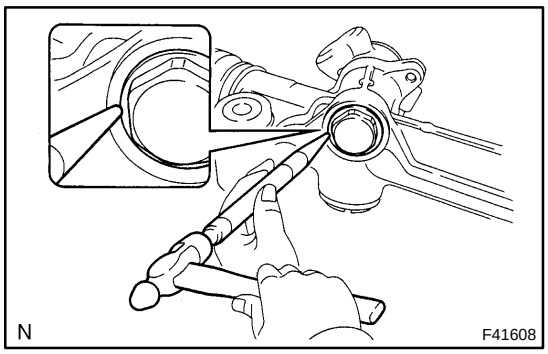

(q) Using a punch and a hummer, stake the rack housing cap and rack housing.

47. INSTALL RACK GUIDE

(a) Install the rack guide.

(b) Install the compression spring.

(c) Apply sealant to 2 or 3 threads of the rack guide spring cap.
Sealant:
Part No. 08833−00080, THREE BOND 1344, LOCTITE 242 or equivalent

(d) Temporarily install the rack guide spring cap.

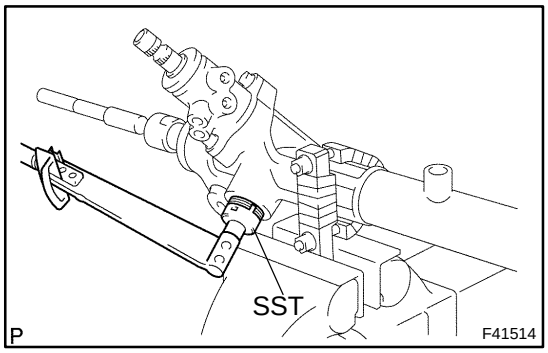

48. ADJUST TOTAL PRELOAD

(a) To prevent the steering rack teeth from damaging the oil seal lip, temporarily install the RH and LH steering rack ends sub−assy.

(b) Using SST, torque the rack guide spring cap.
SST 09631−10021
Torque: 25 N·m (254 kgf·cm, 18 ft·lbf)

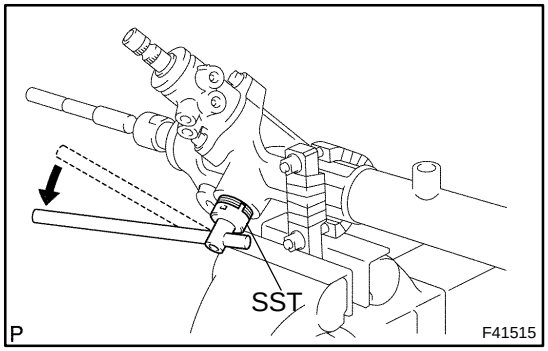

(c) Using SST, loosen the rack guide spring cap.
SST 09631−10021

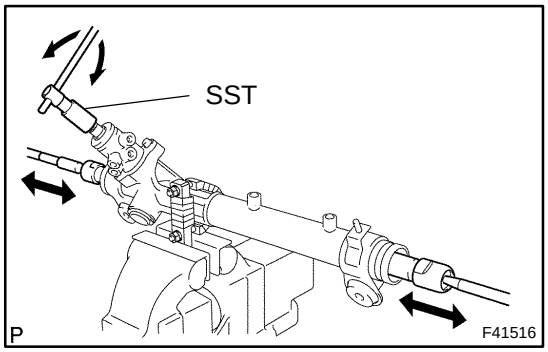

(d) Using SST, turn the control valve to the right and left 1 or 2 times.
SST 09616−00011

(e) Using SST, loosen the rack guide spring cap until the compression spring is not functioning.
SST 09631−10021

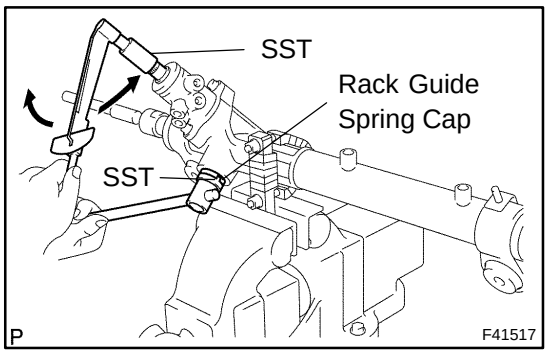

(f) Using SST and a torque wrench, tighten the rack guide spring cap until the preload is within specification.
SST 09616−00011, 09631−10021
Preload (turning):
1.2 − 1.5 N·m (12.2 − 15.3 kgf·cm, 10.6 − 13.3 in.·lbf)

(g) Apply sealant to 2 or 3 threads of the rack guide spring cap nut.
Sealant:
Part No. 08833−00080, THREE BOND 1344, LOCTITE 242 or equivalent

(h) Temporarily install the rack guide spring cap nut.

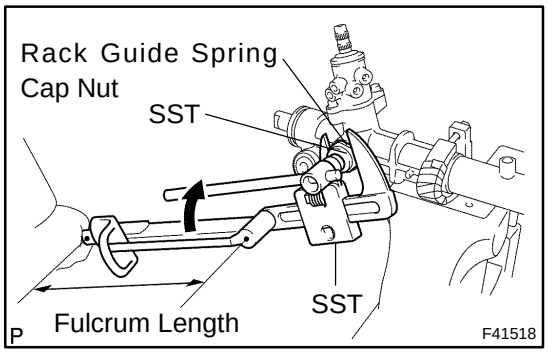

(i) Using SST, hold the rack guide spring cap and using another SST, torque the rack guide spring cap nut.
SST 09616−00011, 09922−10010
Torque: 48 N·m (489 kgf·cm, 35 ft·lbf)

NOTICE:
Use SST 09922−10010 in the direction shown in the illustration.

HINT:
Use a torque wrench with a fulcrum length of 345 mm (13.58 in.).

(j) Precheck the total preload.
Preload (turning):
1.2 − 1.5 N·m (12.2 − 15.3 kgf·cm, 10.6 − 13.3 in.·lbf)

(k) Remove the RH and LH steering rack ends sub−assy.

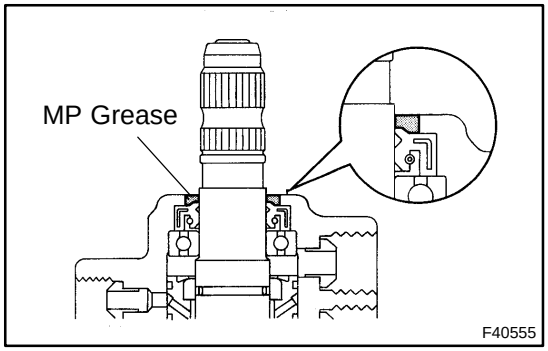

(l) Apply MP grease into the control valve, as shown in the illustration.

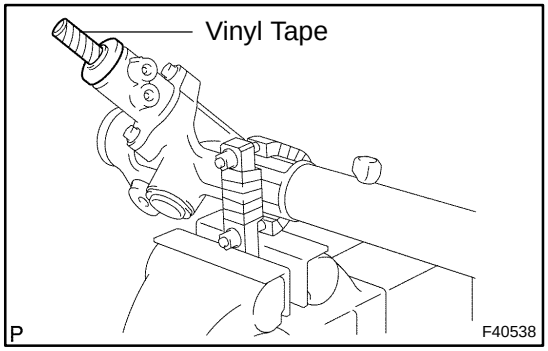

(m) Wind vinyl tape around the serration part of the control valve.

(n) Install the dust cover to the control valve housing.

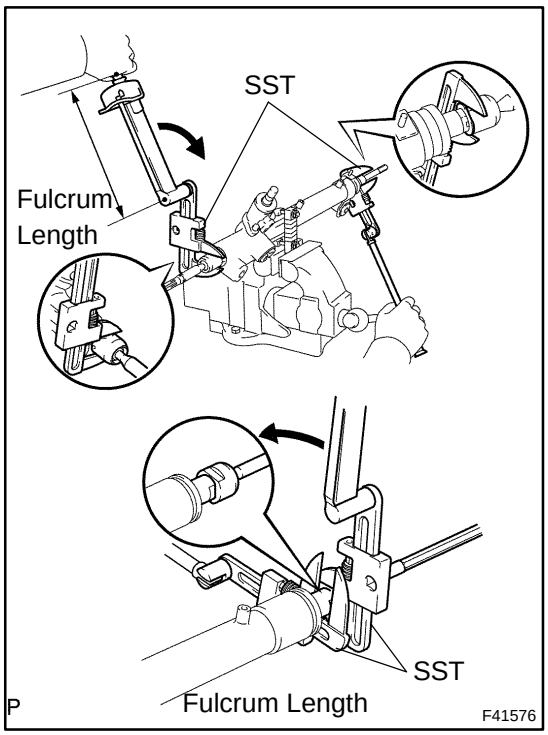

49. INSTALL STEERING RACK END SUB−ASSY

(a) Install a new 2 claw washers, and temporarily install the 2 steering rack ends sub−assy.

HINT:

Align the claws of the claw washer with the power steering rack grooves.

(b) Using 2 SSTs, install the 2 steering rack ends sub−assy.
SST 09922−10010
Torque: 58.5 N·m (597 kgf·cm, 43 ft·lbf)

NOTICE:

Use SST 09922−10010 in the direction shown in the illustration.

HINT:

- Using SST, hold the power steering rack and install the steering rack end sub−assy.
- Use a torque wrench with a fulcrum length of 345 mm (13.58 in.).

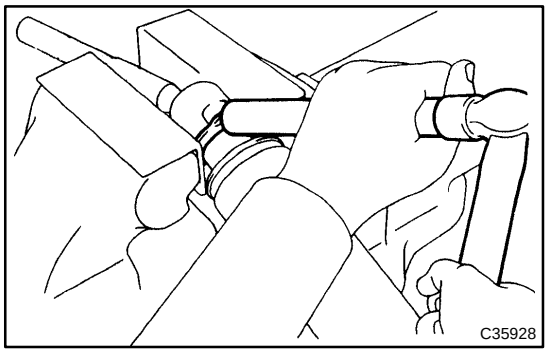

(c) Using a brass bar and a hammer, stake the claw washer.

NOTICE:

Avoid any impact to the power steering rack.

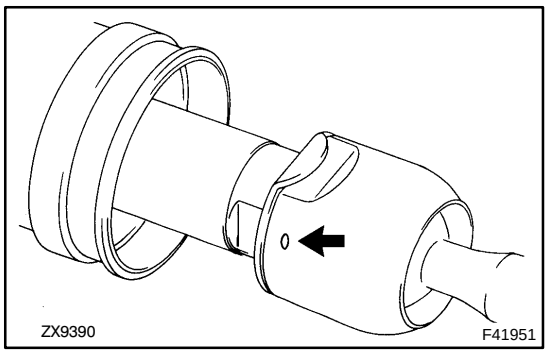

50. INSPECT STEERING RACK END SUB−ASSY

(a) Ensure that the steering rack end sub−assy hole is not clogged with grease.

HINT:

If the hole is clogged, the pressure inside the boot will change after it is assembled and steering wheel is turned.

51. INSTALL STEERING RACK BOOT NO.2

(a) Install the steering rack boot No.2.

52. INSTALL STEERING RACK BOOT NO.1

HINT:

Remove the steering rack boot No.1 by the same procedures with steering rack boot No.2.

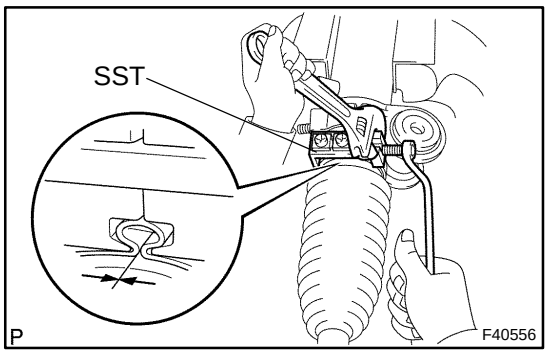

53. INSTALL STEERING RACK BOOT NO.2 CLAMP

(a) Using SST, tighten the steering rack boot No.2 clamp, as shown in the illustration.
SST 09521−24010
Clearance: 3.0 mm (0.118 in.) or less

NOTICE:

Be careful not to damage the boot No.2.

54. INSTALL STEERING RACK BOOT NO.1 CLAMP

SST 09521−24010

NOTICE:

Be careful not to damage the boot No.1.

HINT:

Install the steering rack boot No.1 clamp by the same procedures with steering rack boot No.2 clamp.

55. INSTALL STEERING RACK BOOT CLIP

(a) Using pliers, install the 2 steering rack boot clips.

56. INSTALL TIE ROD ASSY LH

(a) Screw the lock nut and tie rod assy LH onto the steering rack end sub−assy until the matchmarks are aligned.

HINT:

After adjusting toe−in, torque the lock nut.

57. INSTALL TIE ROD ASSY RH

HINT:

Install the RH side by the same procedures with LH side.

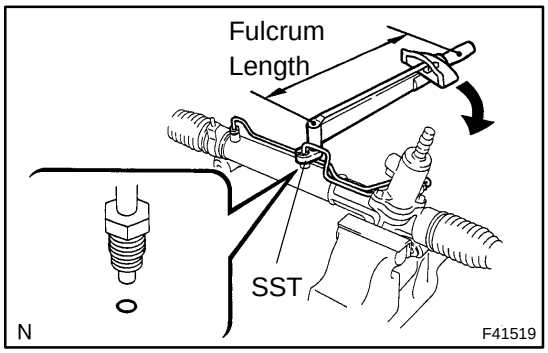

58. INSTALL STEERING LEFT TURN PRESSURE TUBE

(a) Coat 2 new O−rings with power steering fluid and install them to the left turn pressure tube.

(b) Using SST, install the left turn pressure tube to the rack & pinion power steering gear assy.
SST 09023−38201
Torque: 11.5 N·m (117 kgf·cm, 8 ft·lbf)

HINT:

- Use a torque wrench with a fulcrum length of 345 mm (13.58 in.).
- This torque value is effective in the case that SST is parallel to a torque wrench.

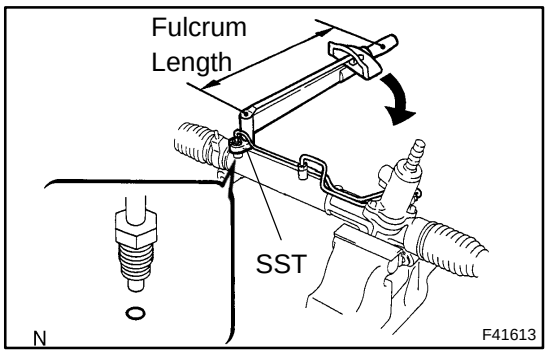

59. INSTALL STEERING RIGHT TURN PRESSURE TUBE

(a) Coat 2 new O−rings with power steering fluid and install them to the right turn pressure tube.

(b) Using SST, install the right turn pressure tube to the rack & pinion power steering gear assy.
SST 09023−38201
Torque: 11.5 N·m (117 kgf·cm, 8 ft·lbf)

HINT:

- Use a torque wrench with a fulcrum length of 345 mm (13.58 in.).
- This torque value is effective in the case that SST is parallel to a torque wrench.

60. INSTALL POWER STEERING RACK HOUSING HEAT INSULATOR (1MZ−FE ENGINE TYPE)

(a) Install power steering rack housing heat insulator.

HINT:

Install nut when installing the return tube clamp.

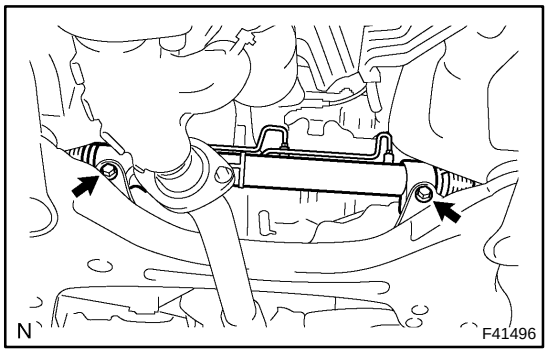

61. INSTALL RACK & PINION POWER STEERING GEAR ASSY

(a) Install the rack & pinion power steering gear assy with the 2 bolts and nuts.
Torque: 70 N·m (714 kgf·cm, 52 ft·lbf)

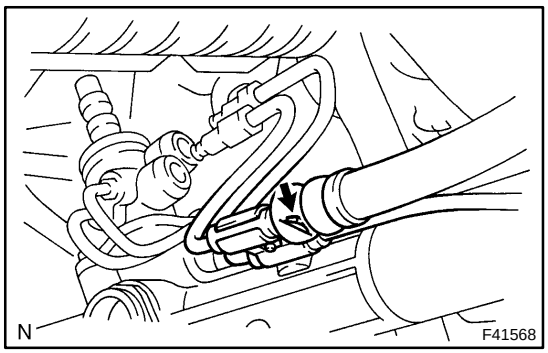

(b) Connect the tube clamp with the bolt.
Torque: 9.8 N·m (100 kgf·cm, 86 in.·lbf)

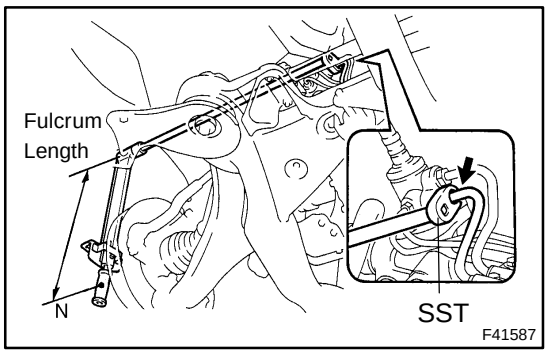

62. CONNECT PRESSURE FEED TUBE ASSY

(a) Using SST, connect the pressure feed tube assy to the rack & pinion power steering gear assy.
SST 09023−12701
Torque: 22.5 N·m (229 kgf·cm, 17 ft·lbf)

HINT:

- Use a torque wrench with a fulcrum length of 300 mm (11.81 in.).
- This torque value is effective in the case that SST is parallel to a torque wrench.

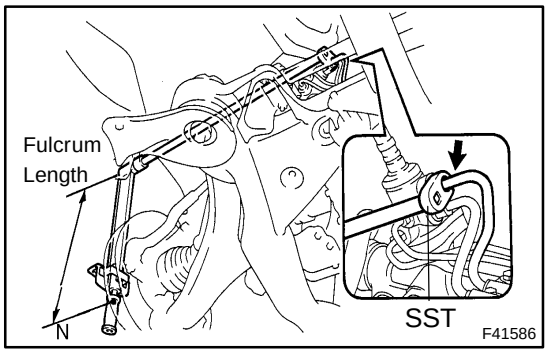

(b) Using SST, connect the return tube assy to the rack & pinion power steering gear assy.
SST 09023−12701
Torque: 22.5 N·m (229 kgf·cm, 17 ft·lbf)

HINT:

- Use a torque wrench with a fulcrum length of 300 mm (11.81 in.).
- This torque value is effective in the case that SST is parallel to a torque wrench.

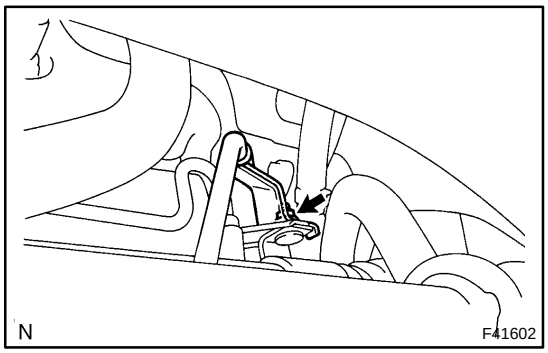

(c) Install the return tube clamp with the nut.
Torque: 9.8 N·m (100 kgf·cm, 86 in.·lbf)

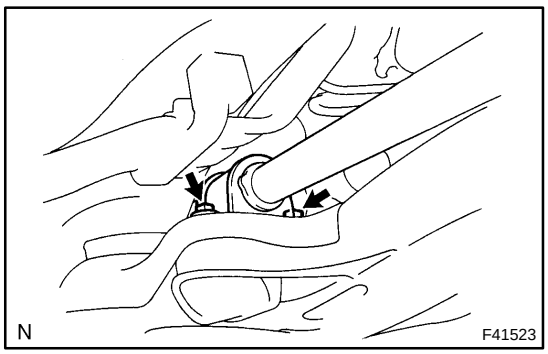

63. INSTALL FRONT STABILIZER BRACKET NO.1 LH

(a) Install the front stabilizer bracket No. 1 LH with the 2 bolts.
Torque: 19 N·m (194 kgf·cm, 14 ft·lbf)

64. INSTALL FRONT STABILIZER BRACKET NO.1 RH

HINT:

Install the RH side by the same procedures with LH side.

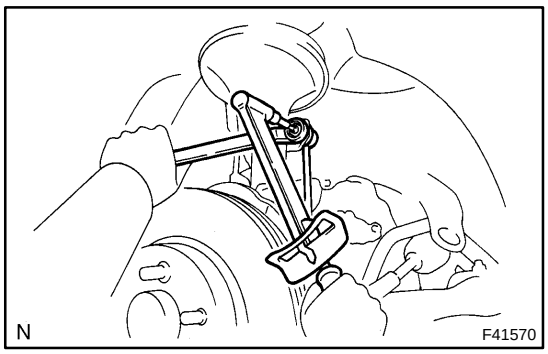

65. CONNECT FRONT STABILIZER LINK ASSY LH

(a) Connect the stabilizer link assy LH to the stabilizer bar with the nut.
Torque: 74 N·m (755 kgf·cm, 55 ft·lbf)

HINT:
If the ball joint turns together with the nut, use a hexagon wrench (6 mm) to hold the stud.

66. CONNECT FRONT STABILIZER LINK ASSY RH

HINT:
Connect the RH side by the same procedures with LH side.

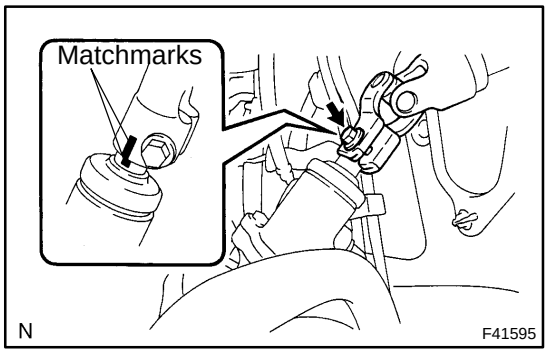

67. CONNECT STEERING INTERMEDIATE SHAFT SUB−ASSY

(a) Align the matchmarks on the intermediate shaft sub−assy and rack & pinion power steering gear assy.
(b) Install the bolt.
Torque: 35.3 N·m (360 kgf·cm, 26 ft·lbf)

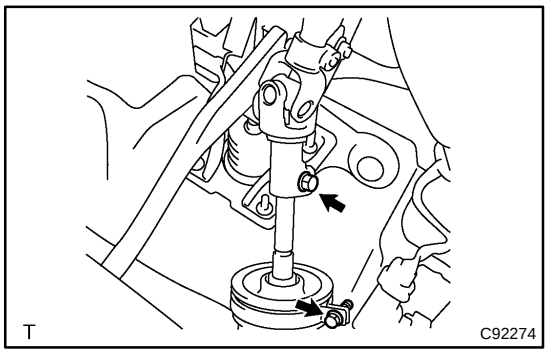

(c) Tighten the bolt.
Torque: 35.3 N·m (360 kgf·cm, 26 ft·lbf)
(d) Install the steering column hole cover No.2 to the steering hole cover No.1.
(e) Connect the clamp to the steering column hole cover No.1 and tighten the bolt.

68. CONNECT TIE ROD ASSY LH

(a) Connect the tie rod assy LH with the nut.
Torque: 49 N·m (500 kgf·cm, 36 ft·lbf)
(b) Install a new cotter pin.

NOTICE:
If the holes for a new cotter pin are not aligned, tighten the nut further up 60 .

69. CONNECT TIE ROD ASSY RH

HINT:
Connect the RH side by the same procedures with LH side.

70. INSTALL FRONT WHEEL
Torque: 103 N·m (1,050 kgf·cm, 76 ft·lbf)

71. ADD POWER STEERING FLUID

72. BLEED POWER STEERING FLUID

73. CHECK POWER STEERING FLUID LEAKAGE

74. INSTALL SPIRAL CABLE SUB−ASSY(See page 50−9, 50−21)

75. CENTER SPIRAL CABLE(See page 50−9, 50−21)
76. INSTALL STEERING WHEEL ASSY(See page 50−9, 50−21)
77. INSTALL HORN BUTTON ASSY(See page 50−9, 50−21)
78. INSPECT AND ADJUST FRONT WHEEL ALIGNMENT(See page 26−5)
79. INSPECT STEERING WHEEL CENTER POINT
80. INSPECT SRS WARNING LIGHT

550BM−04

PROBLEM SYMPTOMS TABLE

Use the table below to help you to find the cause of the problems. The numbers indicate the priority of the likely cause of the problem. Check each part in order. If necessary, replace these parts.

Symptom	Suspect Area	See page
Whole functions of the A/C system does not operate.	1. HTR fuse (50 A) 2. HTR fuse (10 A) 3. A/C fuse 4. HTR relay 5. A/C control assy 6. Wire harness or connector	− − − 55−11 55−4 −
Air Flow Control : No blower operation	1. Heater blower motor relay 2. Blower w/ fan motor sub−assy 3. A/C control assy 4. Wire harness or connector	55−11 55−11 55−4 −
Air Flow Control : No blower control	1. Blower w/ fan motor sub−assy 2. Blower resistor 3. A/C control assy 4. Wire harness or connector	55−11 55−11 55−4 −
Air Flow Control : Insufficient air flow	1. Blower w/ fan motor sub−assy 2. A/C control assy 3. Wire harness or connector	55−11 55−4 −
Temperature Control : No cool air comes out	1. Volume of refrigerant 2. Drive belt tension 3. Cooler compressor assy 4. Refrigerant pressure 5. Pressure switch No.1 6. Air mix damper servo sub−assy 7. Condenser fan 8. A/C control assy 9. Wire harness or connector	55−16 55−26 55−11 55−16 55−4 55−11 − 55−4 −
Temperature Control : No warm air comes out	1. Engine coolant volume 2. Air mix damper servo sub−assy 3. Cooler thermistor No.1 4. A/C control assy 5. Heater radiator unit sub−assy 6. Wire harness or connector	− 55−11 55−11 55−4 − −
Temperature Control : Out coming air is warmer or cooler than the set temperature or response is slow.	1. Air mix damper servo sub−assy 2. A/C control assy 3. Wire harness or connector	55−11 55−4 −
Temperature Control : No temperature control (only Max. cool or Max. warm)	1. Air mix damper servo sub−assy 2. A/C control assy 3. Wire harness or connector	55−11 55−4 −
No air inlet control	1. Recirculation damper servo sub−assy 2. A/C control assy 3. Wire harness or connector	55−11 55−4 −
No air outlet control	1. Mode damper servo sub−assy 2. A/C control assy 3. Wire harness or connector	55−11 55−4 −

No engine idle−up when A/C switch ON	1. Cooler compressor assy 2. A/C control assy 3. 1MZ−FE, 3MZ−FE: ECM 4. Wire harness or connector	55−11 55−4 55−4 −
Brightness does not changes when rheostat volume or light control switch it turned.	1. Illumination light system 2. A/C control assy 3. Wire harness or connector	− 55−4 −

551IK−01

ON−VEHICLE INSPECTION

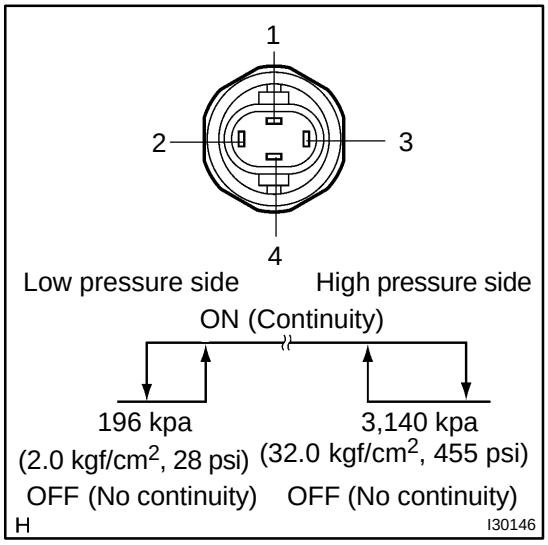

1. INSPECT PRESSURE SWITCH NO.1

(a) Magnetic clutch control:
Inspect pressure switch operation.
(1) Set on the manifold gauge set.
(2) Connect the positive (+) lead from the ohmmeter to terminal 4 and the negative (−) lead to terminal 1.
(3) Check continuity between terminals when refrigerant pressure is changed, as shown in the illustration.

If operation is not as specified, replace the pressure switch.

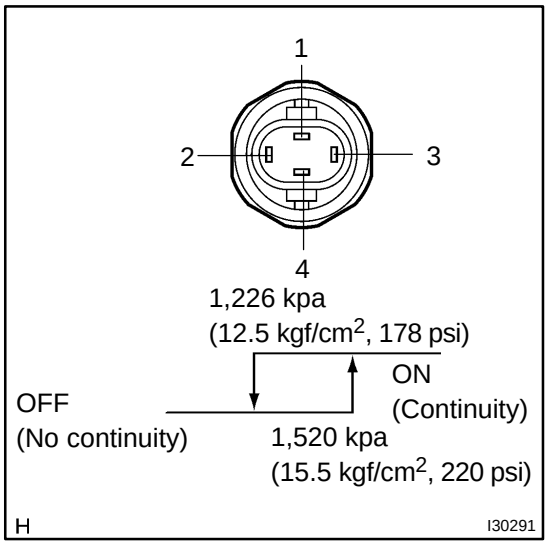

(b) Cooling fan control:
Inspect pressure switch operation.
(1) Connect the positive (+) lead from the ohmmeter to terminal 2 and the negative (−) lead to terminal 3.
(2) Check continuity between terminals when refrigerant pressure is changed, as shown in the illustration.

If operation is not as specified, replace the pressure switch.

2. INSPECT AIR CONDITIONING CONTROL PANEL SUB−ASSY

(a) Disconnect the connector from controller and inspect the connector on wire harness side, as shown in the chart below.

Wire Harness Side:

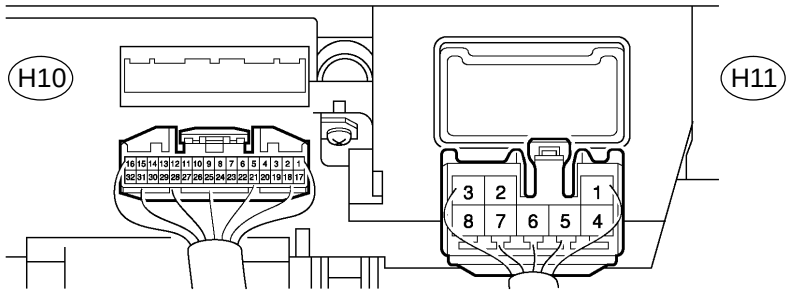

C

I36548

Terminals No. (Symbols)	Wiring Color	Tester Description	Condition	Specification
+B (H10−1) − Body ground	W−R − Body ground	Power supply for air conditioning panel sub−assy (Back−up)	Always	10 to 14 V
IG+ (H10−2) − Body ground	L−B − Body ground	Power supply for air conditioning panel sub−assy (IG)	Ignition switch OFF → ON	Below 1.0 V → 10 to 14 V
GND (H10−32) − Body ground	W−B − Body ground	Ground for air conditioning panel sub−assy	Always	Below 1 Ω
E (H11−1) − Body ground	W−B − Body ground	Ground for air conditioning panel sub−assy	Always	Below 1 Ω

If the circuit is not as specified, inspect the circuits connected to other parts.

(b) Connect the connector to heater controller and inspect wire harness side from the back side, as shown in the chart below.

From Back Side:

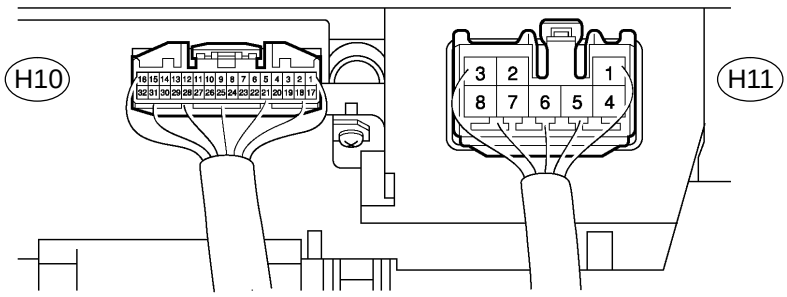

C

I36549

Symbols (Terminals No.)	Wiring Color	Tester Description	Condition	Specification
+B (H10−1) − GND (H10−32)	W−R − W−B	Power supply for air conditioning panel sub−assy (Back−up)	Always	10 to 14 V
IG+ (H10−2) − GND (H10−32)	L−B − W−B	Power supply for air conditioning panel sub−assy (IG)	Ignition switch OFF → ON	Below 1.0 V → 10 to 14 V
A/CB (H10−4) − GND (H10−32)	L−B − W−B	Heater relay signal	Ignition switch: ON Blower switch: OFF → ON (LO, M1, M2, HI)	Below 1.0 V → 10 to 14 V

Terminals No. (Symbols)	Wiring Color	Tester Description	Condition	Specification
1 (H10−6) − GND (H10−32)	LG−B − W−B	Hazard warning switch signal	Hazard warning switch: OFF → ON	10 to 14 V → Below 1.0 V
TCOL (H10−7) − GND (H10−32)	P−L − W−B	Air mix servomotor control signal	Ignition switch: ON Air mix control dial: Max.hot → Max.cool	Below 1.0 V → 10 to 14 V
THOT (H10−8) − GND (H10−32)	P − W−B	Air mix servomotor control signal	Ignition switch: ON Air mix control dial: Max.cool → Max.hot	Below 1.0 V → 10 to 14 V
REC (H10−10) − GND (H10−32)	L − W−B	Air inlet servomotor control signal	Ignition switch: ON Air inlet control switch: FRESH → RICIRCULATION	10 to 14 V → Below 1.0 V
FRS (H10−11) − GND (H10−32)	R−L − W−B	Air inlet servomotor control signal	Ignition switch: ON Air inlet control switch: RECIRCULATION → FRESH	10 to 14 V → Below 1.0 V
A/C (H10−12) − GND (H10−32)	W − W−B	A/C switch operation signal	Ignition switch: ON Blower switch: OFF → ON (LO, M1, M2, HI) A/C switch: OFF → ON	Below 1.0 V → 10 to 14 V
ACID (H10−13) − GND (H10−32)	Y−B − W−B	A/C indicator light up signal	Ignition switch: ON Blower switch: OFF → ON (LO, M1, M2, HI) A/C switch: OFF → ON	Below 1.0 V → 10 to 14 V
DEF (H10−17) − GND (H10−32)	B−W − W−B	Air outlet servomotor operation voltage	Ignition switch: ON Mode dial: Except DEF → DEF	10 to 14 V → Below 1.0 V
F/D (H10−18) − GND (H10−32)	LG−R − W−B	Air outlet servomotor operation voltage	Ignition switch: ON Mode dial: Except FOOT/DEF → FOOT/DEF	10 to 14 V → Below 1.0 V
FOOT (H10−19) − GND (H10−32)	L−R − W−B	Air outlet servomotor operation voltage	Ignition switch: ON Mode dial: Except FOOT → FOOT	10 to 14 V → Below 1.0 V
B/L (H10−20) − GND (H10−32)	BR−W − W−B	Air outlet servomotor operation voltage	Ignition switch: ON Mode dial: Except BI−LEVEL → BI−LEVEL	10 to 14 V → Below 1.0 V
FACE (H10−21) − GND (H10−32)	GR − W−B	Air outlet servomotor operation voltage	Ignition switch: ON Mode dial: Except FACE → FACE	10 to 14 V → Below 1.0 V
S5 (H10−25) − SG (H10−30)	V − B−W	Power supply for air mix damper position sensor	Ignition switch: ON	4.5 to 5.5 V
TSET (H10−27) − SG (H10−30)	L − B−W	Air mix damper position sensor signal	Ignition switch: ON Temperature dial: Max. COOL → Max. HOT	4.0 V → 1.0 V
SG (H10−30) − GND (H10−32)	B−W − W−B	Ground for air mix damper position sensor	Always	Below 1.0 Ω
GND (H10−32) − Body ground	W−B − Body ground	Ground for main power supply	Always	Below 1.0 Ω
E (H11−1) − Body ground	W−B − Body ground	Ground for blower control switch	Always	Below 1.0 Ω
LO (H11−3) − E (H11−1)	L−W − W−B	Blower switch signal	Ignition switch: ON Blower switch: OFF → LO	10 to 14 V → Below 1.0 V
M1 (H11−5) − E (H11−1)	L−O − W−B	Blower switch signal	Ignition switch: ON Blower switch: LO → M1	10 to 14 V → Below 1.0 V

Terminals No. (Symbols)	Wiring Color	Tester Description	Condition	Specification
M2 (H11−6) − E (H11−1)	L−B − W−B	Blower switch signal	Ignition switch: ON Blower switch: M1 → M2	10 to 14 V → Below 1.0 V
HI (H11−7) − E (H11−1)	L − W−B	Blower switch signal	Ignition switch: ON Blower switch: M2 → HI	10 to 14 V → Below 1.0 V

If circuit is as specified, replace the controller with a new one. If the circuit is not as specified, inspect the circuits connected to other parts.

3. INSPECT AIR CONDITIONING AMPLIFIER (2AZ−FE)

(a) Disconnect the connector from controller and inspect the connector on wire harness side, as shown in the chart below.

Wire Harness Side:

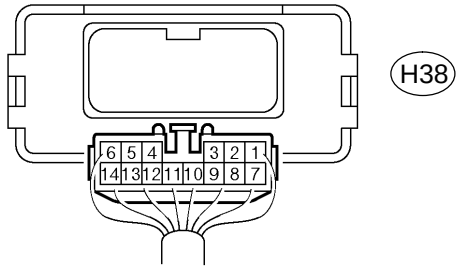

C

I36566

Terminals No. (Symbols)	Wiring Color	Tester Description	Condition	Specification
GND (H38−5) − Body ground	W−B − Body ground	Ground for air conditioning amplifier	Always	Below 1.0 Ω

If the circuit is not as specified, inspect the circuits connected to other parts.

(b) Connect the connector to air conditioning amplifier and inspect wire harness side from the back side, as shown in the chart below.

From Back Side:

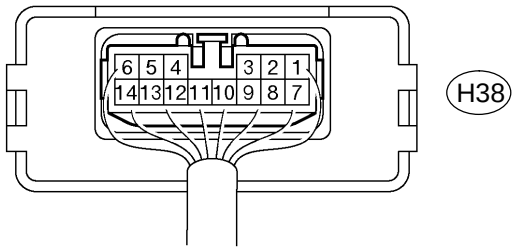

C

I36565

Symbols (Terminals No.)	Wiring Color	Tester Description	Condition	Specification
AC1 (A38−1) − GND (A38−5)	Y−B − W−B	Engine idle−up demand signal	Ignition switch: ON Blower switch: OFF → ON (LO, M1, M2, HI) A/C switch: OFF → ON	10 to 14 V → Below 1.0 V

Symbols (Terminals No.)	Wiring Color	Tester Description	Condition	Specification
PRS (A38−2) − GND (A38−5)	L−W − W−B	Pressure switch signal	Ignition switch: START Refrigerant pressure: Normally → Less than 196 kpa (2.0 kgf/cm^2, 28 psi) or more than 3,140 kpa (32.0 kgf/cm^2, 455 psi)	10 to 14 V → Below 1.0 V
IGN (A38−4) − GND (A38−5)	B−O − W−B	Engine revolution signal	Engine is running	Pulse generation (see waveform 1)
GND (A38−5) − Body ground	W−B − Body ground	Ground for air conditioning amplifier	Always	Below 1.0 Ω
ACT (A38−7) − GND (A38−5)	R − W−B	Magnet clutch ON permission signal	Ignition switch: ON Magnet clutch: OFF → ON	Below 1.0 V → 10 to 14 V
A/C (A38−8) − GND (A38−5)	W − W−B	A/C switch signal	Ignition switch: ON Blower switch: OFF → ON (LO, M1, M2, HI) A/C switch: OFF → ON	Below 1.0 V → 10 to 14 V
TE (A38−9) − GND (A38−5)	W−L − W−B (*1) L−W − W−B (*2)	A/C evaporator temperature sensor signal	Ignition switch: OFF → ON	see page 55−11
LED (A38−10) − GND (A38−5)	Y−B − W−B	A/C indicator signal	Ignition switch: ON Blower switch: OFF → ON (LO, M1, M2, HI) A/C switch: OFF → ON	Below 1.0 V → Below 10 to 14 V
MGC (A38−12) − GND (A38−5)	B − W−B	Magnet clutch relay signal	Ignition switch: ON Blower switch: OFF → ON (LO, M1, M2, HI) A/C switch: OFF → ON	10 to 14 V → Below 1.0 V
SG (A38−13) − GND (A38−5)	Y−G − W−B	Ground for A/C evaporator temperature sensor signal	Always	Below 1.0 Ω
LOCK (A38−14) − GND (A38−5)	W−L − W−B	Compressor revolution signal	Ignition switch: ON A/C switch: ON	Pulse generation (see waveform 2)

If circuit is as specified, replace the controller with a new one. If the circuit is not as specified, inspect the circuits connected to other parts.

4. INSPECT ECM (1MZ−FE, 3MZ−FE)

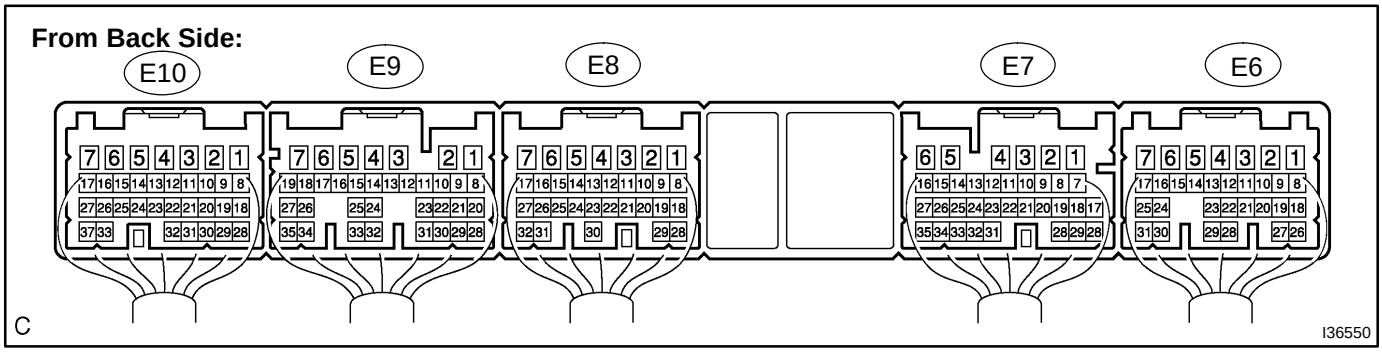

Symbols (Terminal No.)	Wiring Color	Tester Description	Condition	Specification
HP (E7−1) − E2 (E10−28)	L−B − BR	Pressure switch signal	Ignition switch: START Refrigerant pressure: Normally → Less than 196 kpa (2.0 kgf/cm^2, 28 psi) or more than 3,140 kpa 32.0 kgf/cm^2, 455 psi)	10 to 14 V → Below 1.0 V
LCKI (E8−23) − E2 (E10−28)	W−L − BR	Compressor revolution signal	Ignition switch: ON A/C switch: ON	Pulse generation (see waveform 3)
E2 (E10−28) − Body ground	BR − Body ground	Ground for ECM	Always	Below 1.0 V
THE (E8−32) − E2 (E10−28)	L−W − BR	A/C evaporator temperature sensor signal	Ignition switch: OFF → ON	see page 55−11
ACLD (E7−33) − E2 (E10−28)	B − BR	Engine idle−up demand signal	Ignition switch: ON A/C switch: OFF → ON	Below 1.0 V → 10 to 14 V
A/CS (E7−31) − E2 (E10−28)	P−L − BR	A/C switch signal	Ignition switch: ON A/C switch: OFF → ON	Below 1.0 V → 10 to 14 V

If circuit is as specified, replace the controller with a new one. If the circuit is not as specified, inspect the circuits connected to other parts.

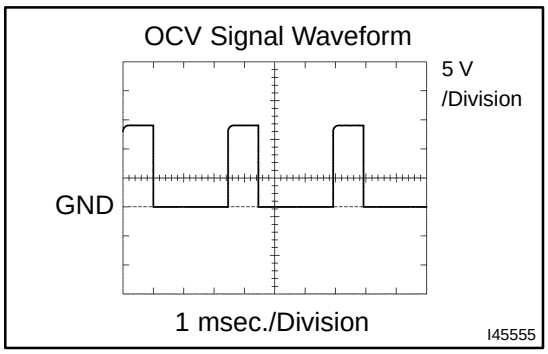

waveform 1:
Measure the waveform between terminal IGN of the A/C amplifier assy connector and body ground.

OK:

A waveform should be output as shown in the illustration.

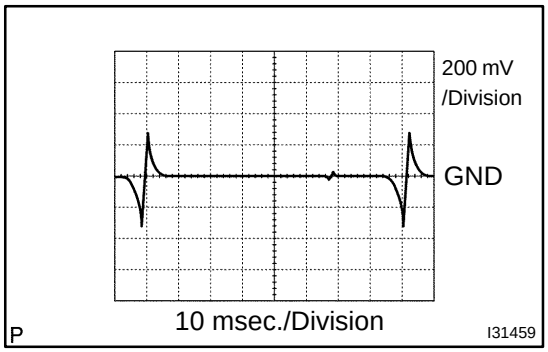

waveform 2:
Measure the waveform between terminal LOCK of the A/C amplifier assy connector and body ground.

OK:

A waveform should be output as shown in the illustration.

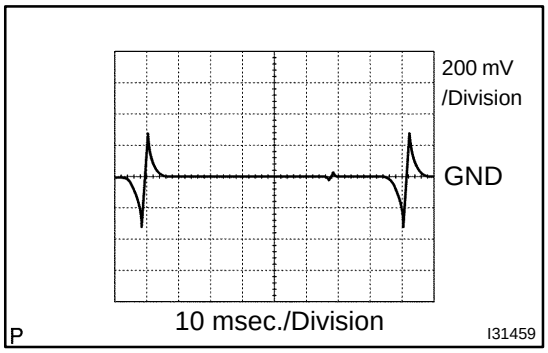

waveform 3:
Measure the waveform between terminal LCKI of the ECM connector and body ground.

OK:

A waveform should be output as shown in the illustration.

INSPECTION

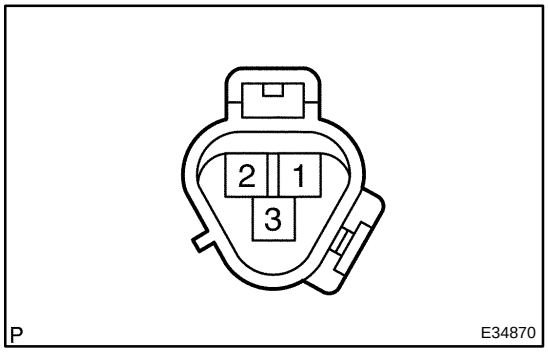

1. COOLER COMPRESSOR ASSY

(a) Connect the positive (+) lead from the battery to terminal 3 and the negative (−) lead to the body ground.

(b) Check that the magnet clutch energized.

If operation is not as specified, replace the magnet clutch assy.

(c) Measure resistance between terminals 1 and 2.

Standard resistance: 165 − 205 Ω at 20 °C (68 °F)

If resistance is not as specified, replace the cooler compressor assy.

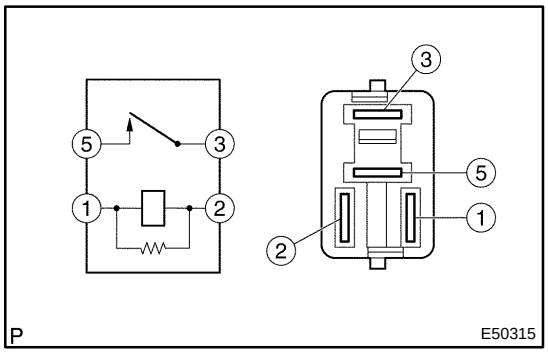

2. MAGNET−CLUTCH RELAY

Condition	Tester connection	Specified condition
Constant	1 − 2	Continuity
Apply B + between terminals 1 and 2.	3 − 5	Continuity

If continuity is not as specified, replace the magnet−clutch relay.

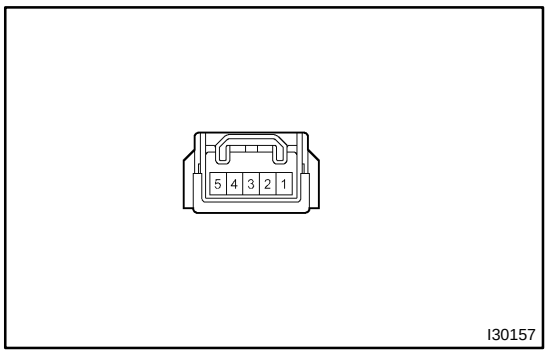

3. AIRMIX DAMPER SERVO SUB−ASSY

(a) Inspect servomotor operation.

(1) Connect the positive (+) lead from the battery to terminal 4 and negative (−) lead to terminal 5, then check that the arm turns to ”COLD” side smoothly.

(2) Connect the positive (+) lead from the battery to terminal 5 and negative (−) lead to terminal 4, then check that the arm turns to ”HOT” side smoothly.

If operations are not as specified, replace the air mix servomotor.

(b) Inspect position sensor resistance.

Measure resistance between terminals at servomotor arm each position as shown in the chart.

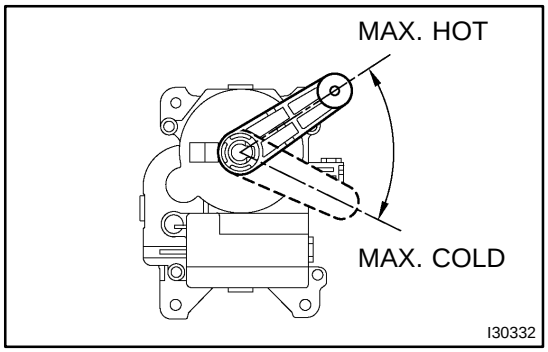

Tester connection	Condition	Specified condition
1 − 2	Constant	4.2 − 7.8 kΩ
1 − 3	Arm position at ”COLD”	0.8 − 1.6 kΩ
1 − 3	Arm position at ”HOT”	3.4 − 6.2 kΩ

If resistance is not as specified, replace the servomotor.

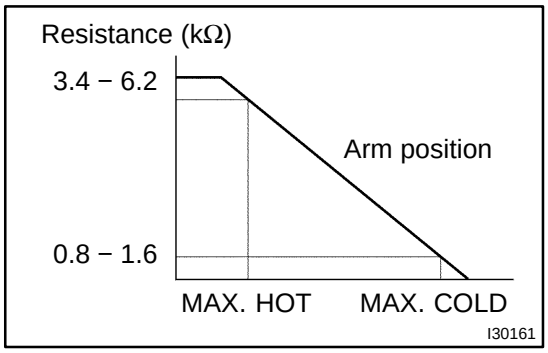

4. MODE DAMPER SERVO SUB−ASSY

(a) Inspect servomotor operation.

(1) Connect the positive (+) lead from the battery to terminal 7 and the negative (−) lead to terminal 8.

(2) Connect the negative (−) lead from the battery to each terminal as shown in the chart, and check that the shaft rotates at each position, as shown in the illustration.

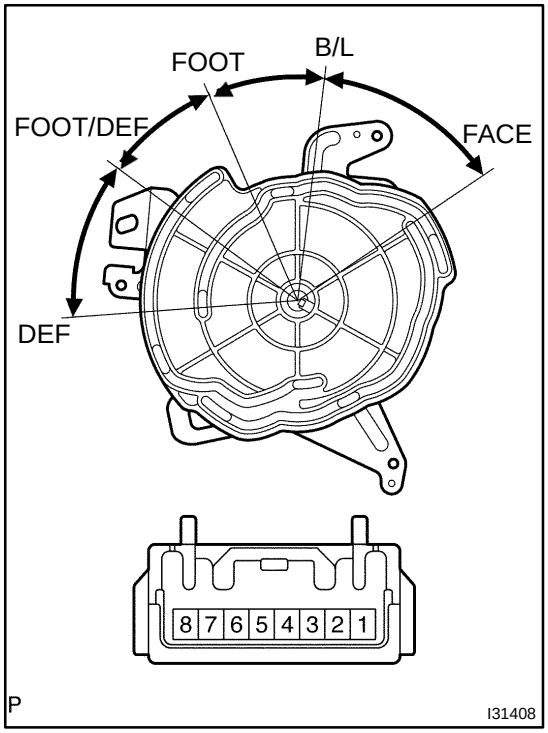

Connected terminal	Position
1	DEF
2	FOOT/DEF
3	FOOT
5	B/L
6	FACE

If operation is not as specified, replace the servomotor.

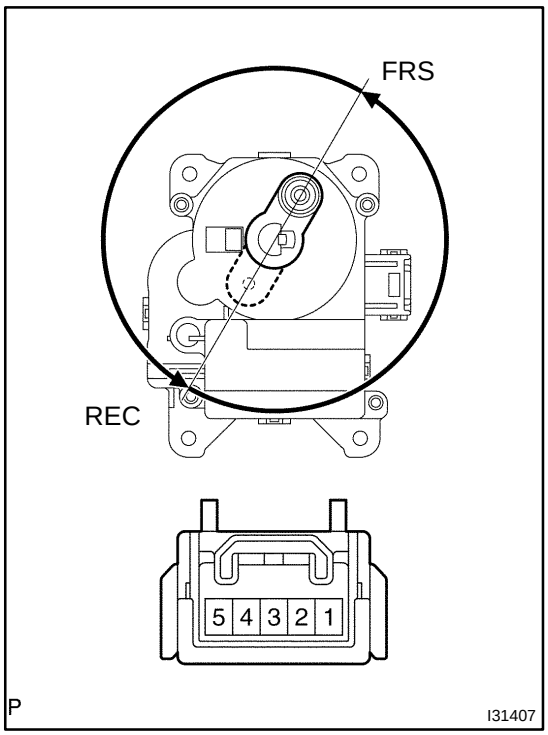

5. RECIRCULATION DAMPER SERVO SUB−ASSY

(a) Inspect servomotor operation.

(1) Connect the positive (+) lead from the battery to terminal 5 and negative (−) lead to terminal 1, then check that the arm turns to ”REC” side smoothly.

(2) Connect the positive (+) lead from the battery to terminal 5 and negative (−) lead to terminal 2, then check that the arm turns to ”FRS” side smoothly.

If operations are not as specified, replace the mode damper servomotor.

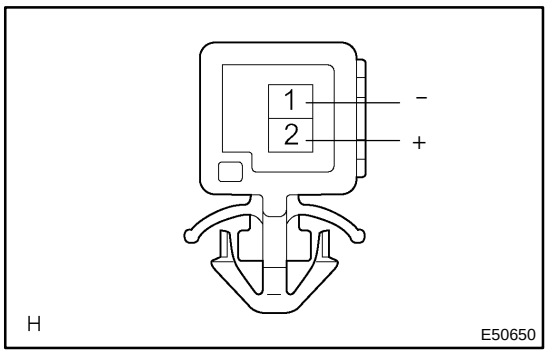

6. COOLER THERMISTOR NO.1

(a) Remove cooler thermistor No.1.

(b) Check resistance between terminals 1 and 2 of cooler thermistor No.1 at each temperature, as shown in the chart.

Standard:

Tester connection	Condition	Specified condition
1 − 2	−10°C (14°F)	8.00 to 10.00 kΩ
1 − 2	−5°C (23°F)	6.15 to 7.65 kΩ
1 − 2	0°C (32°F)	4.75 to 5.85 kΩ
1 − 2	5°C (41°F)	3.70 to 4.55 kΩ
1 − 2	10°C (50°F)	2.91 to 3.55 kΩ
1 − 2	15°C (59°F)	2.32 to 2.80 kΩ
1 − 2	20°C (68°F)	1.85 to 2.22 kΩ
1 − 2	25°C (77°F)	1.48 to 1.77 kΩ
1 − 2	30°C (86°F)	1.20 to 1.43 kΩ

NOTICE:

Even slightly touching the sensor may change the resistance value.Be sure to hold the connector of the sensor.

HINT:

As the temperature increases, the resistance decreases (see the chart below).

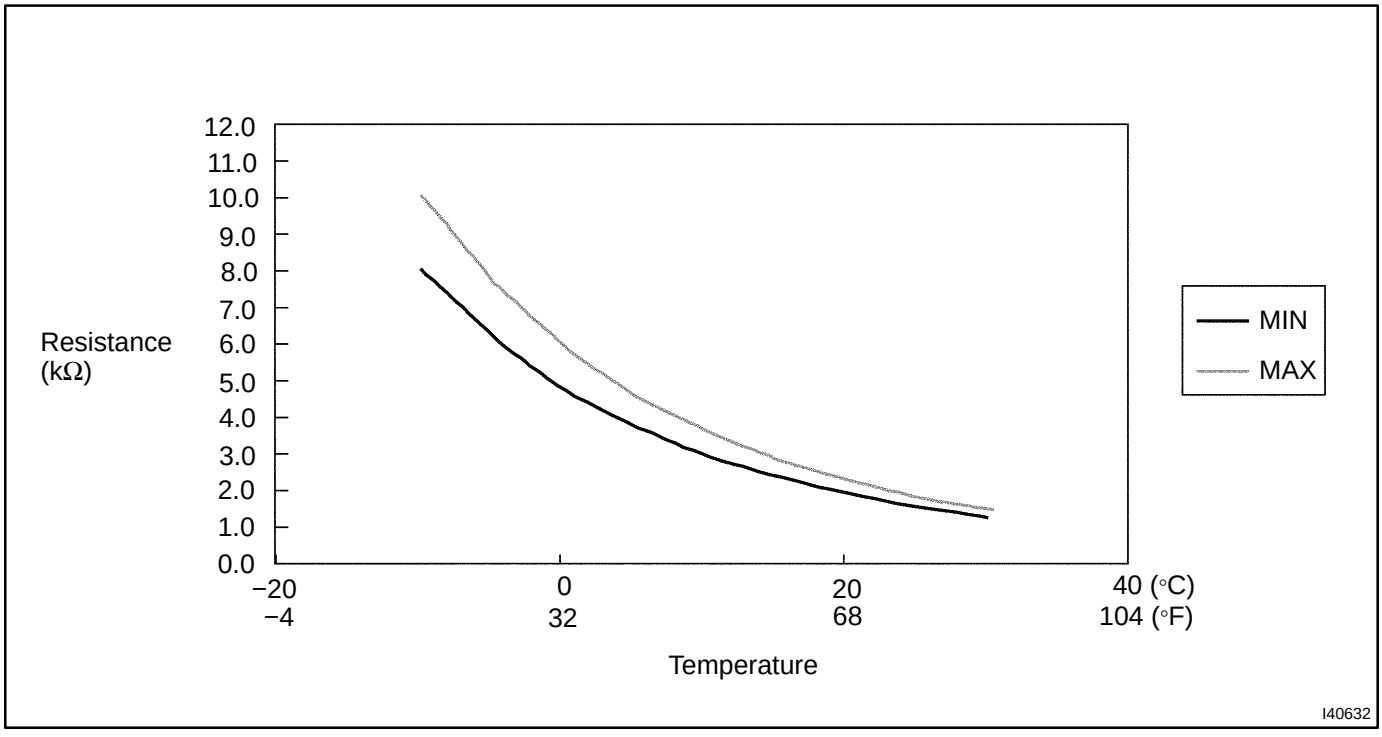

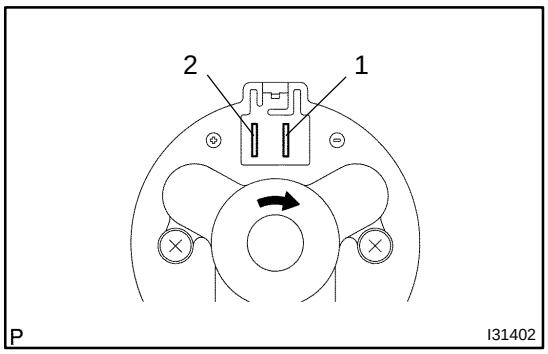

7. BLOWER W/FAN MOTOR SUB−ASSY

(a) Connect the positive (+) lead from the battery to terminal 2 and negative (−) to terminal 1, then check that the motor operation smoothly.

If operation is not as specified, replace the blower motor.

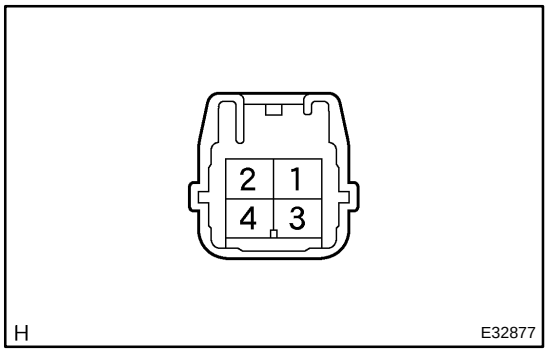

8. BLOWER RESISTOR

(a) Measure resistance between terminals, as shown in the chart below.

Tester connection	Specified condition
1 − 2	1.398 − 1.605 Ω
1 − 3	0.465 − 0.535 Ω
1 − 4	3.069 − 3.531 Ω

If resistance is not as specified, replace the blower resistor.

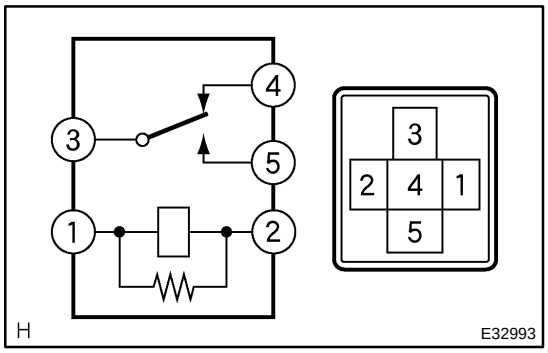

9. HEATER BLOWER MOTOR RELAY ASSY

Condition	Tester connection	Specified condition
Constant	1 − 2 3 − 4	Continuity
Apply B + between terminals 1 and 2.	3 − 5	Continuity

If continuity is not as specified, replace the heater blower motor relay.

REFRIGERANT

ON−VEHICLE INSPECTION

550BS−04

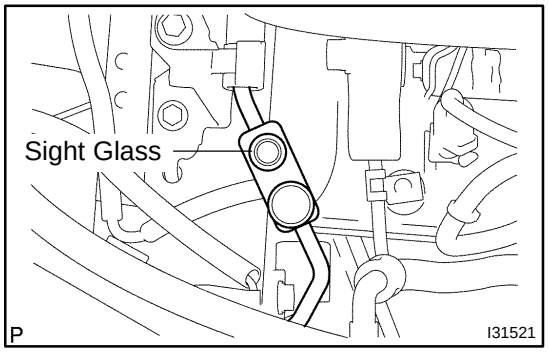

1. INSPECT REFRIGERANT VOLUME

(a) Observe the sight glass on the cooler refrigerant liquid pipe A.

Test conditions:

- Running engine at 1,500 rpm
- Blower speed control switch at ”HI”
- A/C switch ON
- Temperature control dial at ”MAX. COOL”
- Fully open the doors

Item	Symptom	Amount of refrigerant	Corrective Actions
1	Bubbles present	Insufficient*	(1) Check for gas leakage and repair if necessary (2) Add refrigerant until bubbles disappear
2	No bubbles present	None, insufficient or too much	Refer 3 and 4
3	No temperature difference between compressor inlet and outlet	Empty or nearly empty	(1) Check for gas leakage with gas leak detector and repair if necessary (2) Add refrigerant until bubbles disappear
4	Considerable temperature difference between compressor inlet and outlet.	Correct or too much	Refer to 5 and 6
5	Immediately after air conditioning is turned off, refrigerant clear	Too much	(1) Discharge refrigerant (2) Remove air and supply proper amount or purified refrigerant
6	Immediately after air conditioning is turned off, refrigerant foams and then becomes clear	Correct	−

*: Bubbles in the sight glass with ambient temperatures higher than usual can be considered normal if cooling is sufficient.

2. INSPECT REFRIGERANT PRESSURE WITH MANIFOLD GAUGE SET

(a) This is a method in witch the trouble is located by using a manifold gauge set. Read the manifold gauge pressure when the these conditions are established.

Test conditions:

- Temperature at the air inlet with the switch set at RECIRC is 30 − 35 ˚C (86 − 95 ˚F)
- Engine running at 1,500 rpm
- Blower speed control switch at ”HI” position
- Temperature control dial at ”COOL” position
- A/C switch ON
- Fully open doors

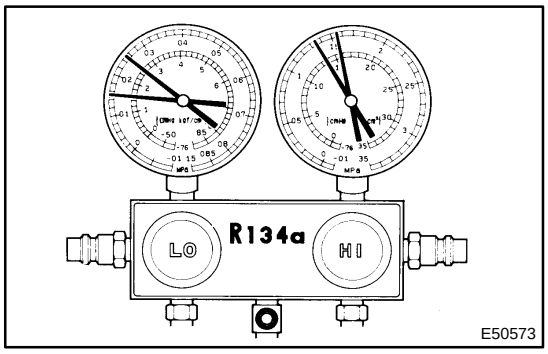

(1) Normally functioning refrigeration system.

Gauge reading:

Low pressure side:

0.15 − 0.25 MPa (1.5 − 2.5 kgf/cm^2)

High pressure side:

1.37 − 1.57 MPa (14 − 16 kgf/cm$^{2)}$

(2) Moisture present in refrigeration system.

Condition : Periodically cools and then fails to cool

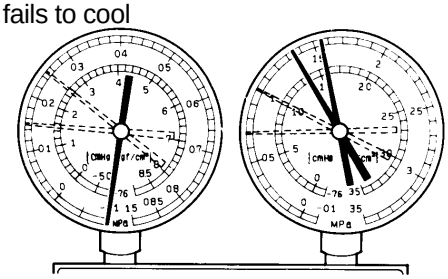

Symptom	Probable cause	Diagnosis	Remedy
During operation, pressure on low pressure side sometimes become a vacuum and sometime normal	Moisture in refrigerating system freezes at expansion valve orifice causing a temporary stop of cycle, however, when it melts, normal state is restored.	●Drier in oversaturected state ●Moisture in refrigerating system freezes at expansion valve orifice and blocks circulation of refrigerant	(1) Replace condenser (2) Remove moisture in cycle by repeatedly evacuating air (3) Supply proper amount of new refrigerant

(3) Insufficient cooling

Condition: Cooling system does not function eftectively.

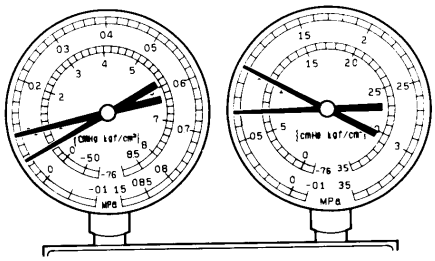

I22118

Symptom	Probable cause	Diagnosis	Corrective Actions
●Pressure low on both low and high pressure sides ●Bubbles seen thought sight glass continuously ●Insufficient cooling performance	Gas leakage in refrigeration system	●Insufficient refrigerant ●Refrigerant leaking	(1) Check for gas leakage and repair if necessary (2) Supply proper amount of new refrigerant (3) If indicated pressure value is close to a 0 when connected to gauge, create the vacuum after inspecting and repairing location of leak

(4) Poor circulation of refrigerant

Condition: Cooling system close not function effectively.

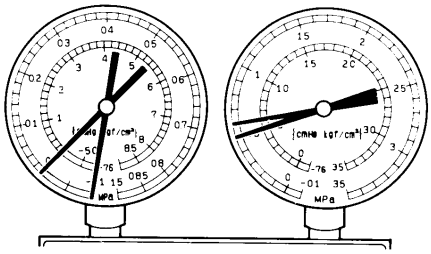

I22119

Symptom	Probable cause	Diagnosis	Corrective Action
●Pressure low on both low and high pressure sides ●Frost on pipe from condenser to unit	Refrigerant flow obstructed by dirt in receiver	Receiver clogged	Replace condenser

(5) Refrigerant does not circulate

Condition: Cooling system does not function. (Sometimes it way function)

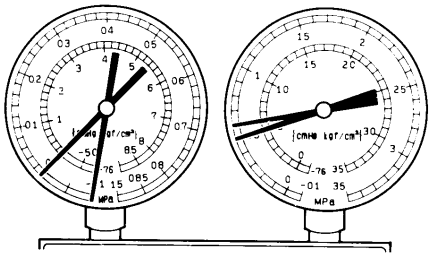

I22120

Symptom	Probable cause	Diagnosis	Corrective Actions
●Vacuum indicated on low pressure side, very low pressure indicated on high pressure side ●Frost or dew seen on piping before and after receiver/ drier or expansion valve	●Refrigerant flow obstructed by moisture or dirt in refrigerating system ●Refrigerant flow obstructed by gas leaked from expansion valve	Refrigerant does not circulate	(1) Check expansion valve (2) Clean out dirt in expansion valve by air blowing (3) Replace condenser (4) Evaporate air and supply proper amount of new refrigerant. (5) For gas leakage from expansion valve, replace expansion valve

(6) Refrigerant overcharged or insufficient cooling of condenser

Condition: Cooling system does not function dftectively.

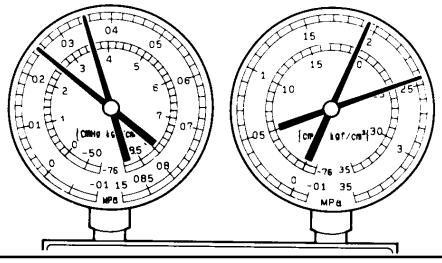

I22121

Symptom	Probable cause	Diagnosis	Remedy
●Pressure too high on both low and high pressure sides ●No sir bubbles seen through the sight glass even when the engine rpm is lowered	●Unable to develop sufficient performance due to excessive use of refrigerating system ●Insufficient cooling of condenser	●Excessive refrigerant in cycle→too much refrigerant supplied ●Condenser cooling insufficient→condenser fins clogged at cooling fan	(1) Clean condenser (2) Check cooling fan with cooling fan motor operation (3) If (1) and (2) are in normal state, check amount of refrigerant and supply proper amount of refrigerant

(7) Air present in refrigeration system

Condition: Cooling system does not function.

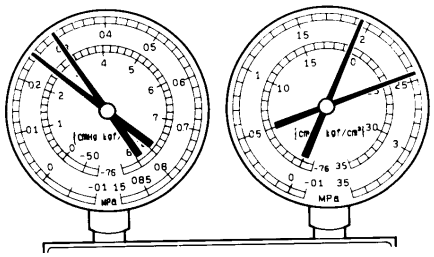

NOTE : These gauge indications are shown when the refrigerating system has been opens and the refrigerant charged without vacuum purging.

I22122

Symptom	Probable cause	Diagnosis	Corrective Actions
●Pressure too high on both low and high pressure sides ●The low pressure piping too hot to the touch ●Bubbles seen through sight glass	Air entered in refrigerating system	●Air present in refrigerating system ●Insufficient vacuum purging	(1) Check compressor oil to see if it is see if it is dirty or insufficient (2) Evacuate air and supply new refrigerant

(8) Expansion valve improperly

Condition: Refrigerant functions insufficient.

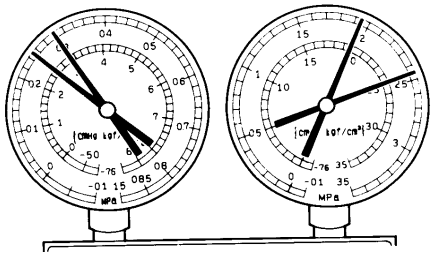

I22123

Symptom	Probable cause	Diagnosis	Corrective Actions
●Pressure too high on both low and high pressure sides ●Frost or large amount of dew on piping on low pressure side	Trouble in expansion valve	●Excessive refrigerant in low pressure piping ●Expansion valve opened too wide	Check expansion valve

(9) Defective compression compressor

Condition : Refrigerant is not effective.

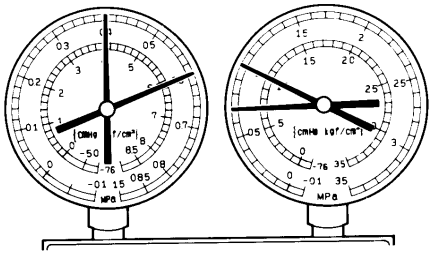

I22124

Symptom	Probable cause	Diagnosis	Corrective Actions
●Pressure too high on low high pressure sides ●Pressure too low to on high pressure side	Internal leak in compressor	●Compression failure ●Leakage from valve damaged or broken sliding parts	Repair or replace compressor

Gauge readings (Reference)

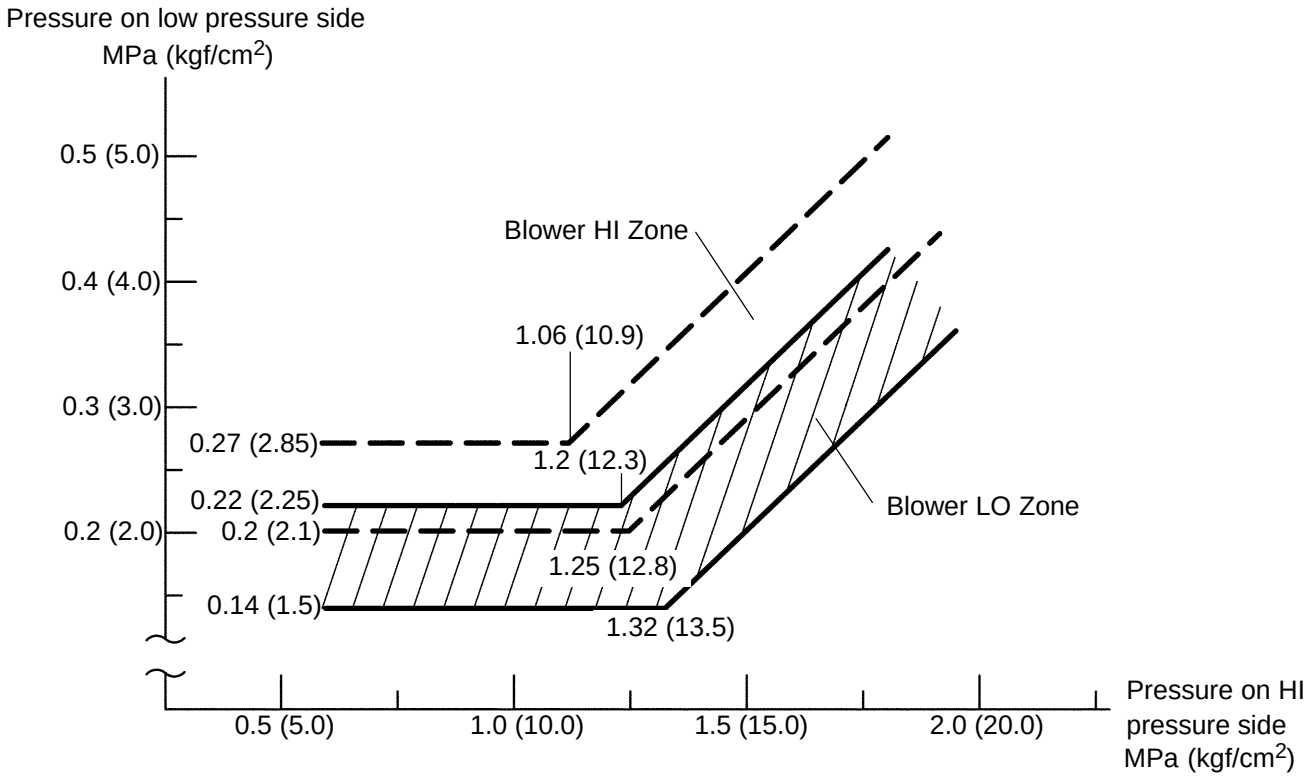

I30081

550BT−03

REPLACEMENT

1. DISCHARGE REFRIGERANT FROM REFRIGERATION SYSTEM

(a) Turn the A/C switch ON.

(b) Operating the cooler compressor at the engine rpm of approx. 1,000 for 5 to 6 min., circulate the refrigerant and collect compressor oil remaining in each component into the cooler compressor as much as possible.

(c) Stop the engine.

(d) Let the refrigerant gas out.

SST 07110−58060 (07117−58080, 07117−58090, 07117−78050, 07117−88060, 07117−88070, 07117−88080)

2. CHARGE REFRIGERANT

(a) Using a vacuum pump, perform a vacuum purping.

(b) Charge refrigerant, HFC−134a (R134a).

Standard: 550 ± 50 g (19.37 ± 1. 76 oz.)

SST 07110−58060 (07117−58060, 07117−58070, 07117−58080, 07117−58090, 07117−78050, 07117−88060, 07117−88070, 07117−88080)

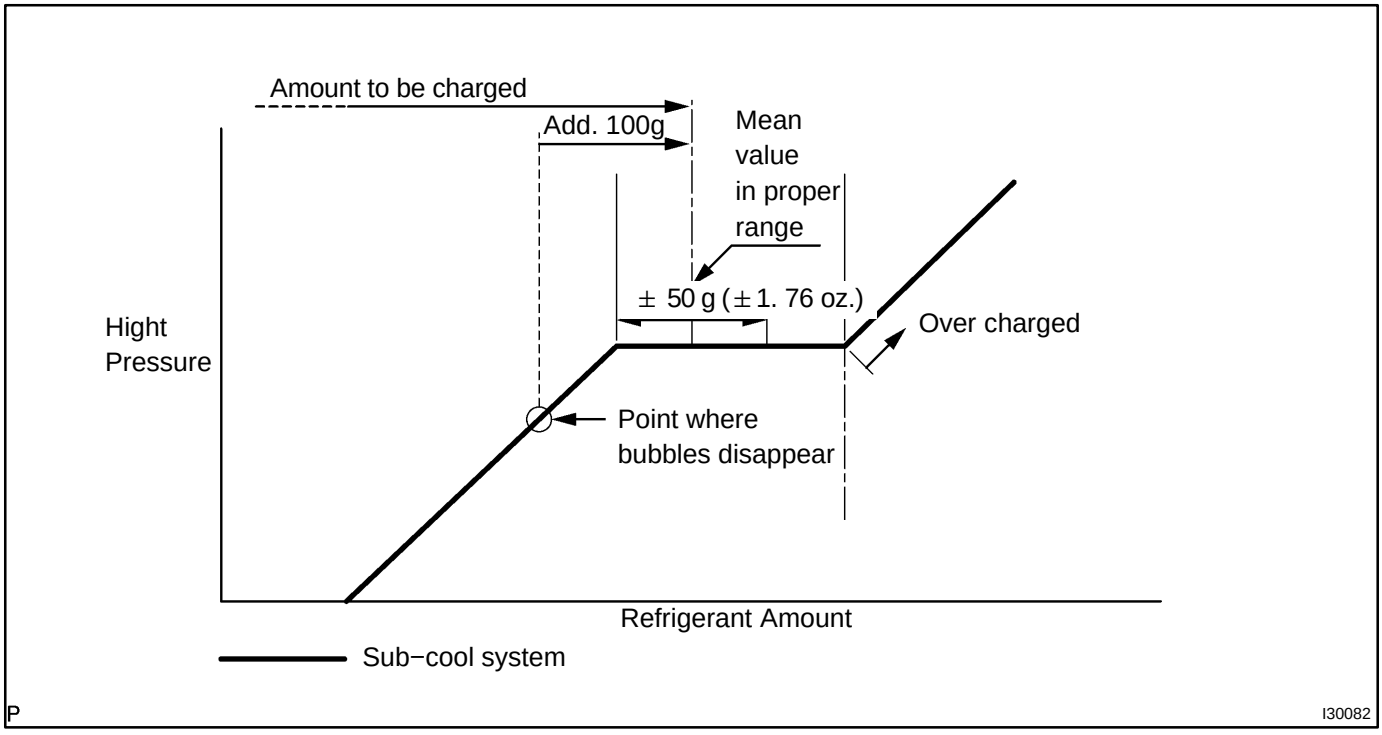

3. WARM UP ENGINE

4. INSPECT LEAKAGE OF REFRIGERANT

REFRIGERANT LINE

COMPONENTS

55158−03

3MZ−FE:

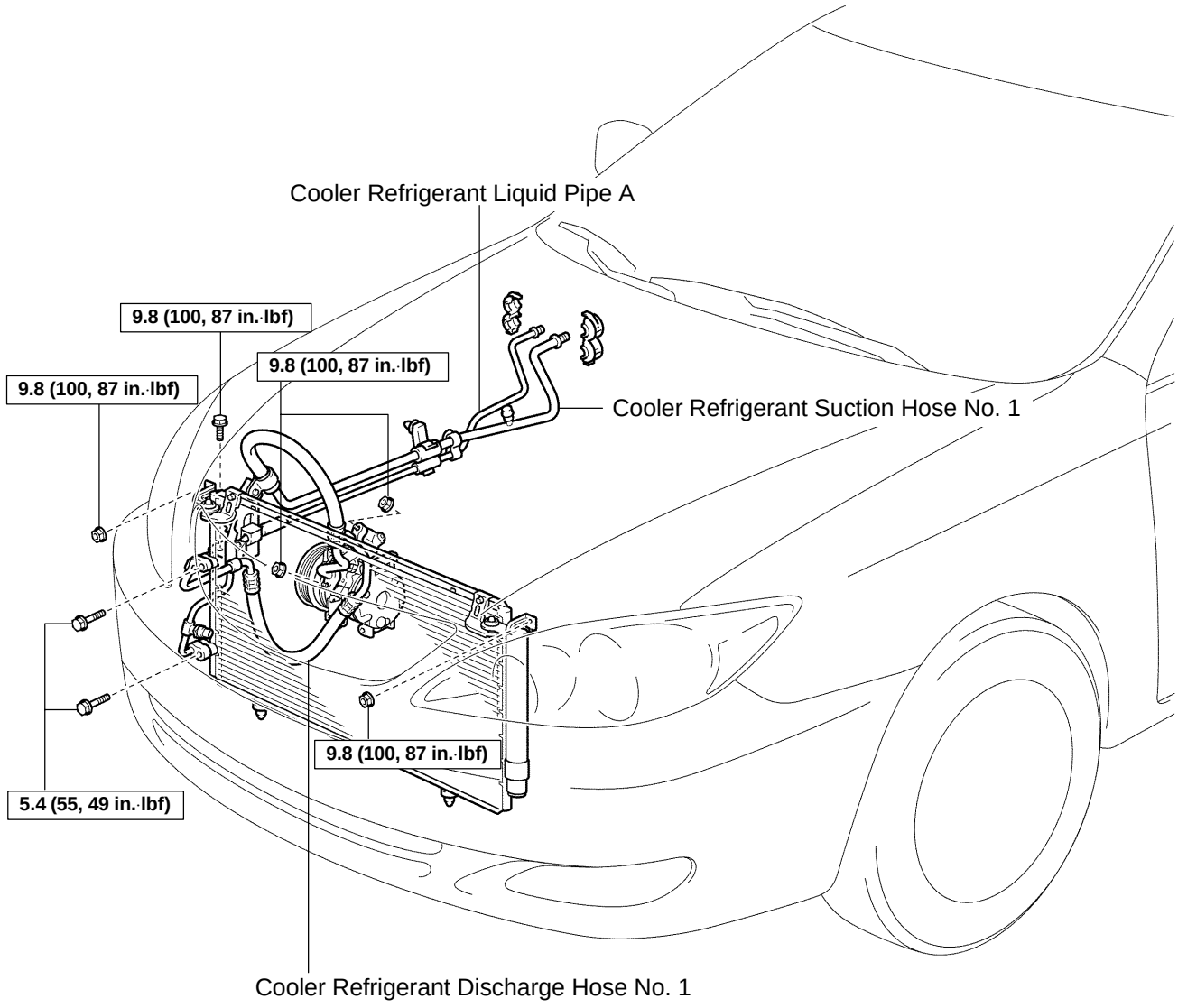

N·m (kgf·cm, ft·lbf) : Specified torque

P

I31330

1MZ−FE:

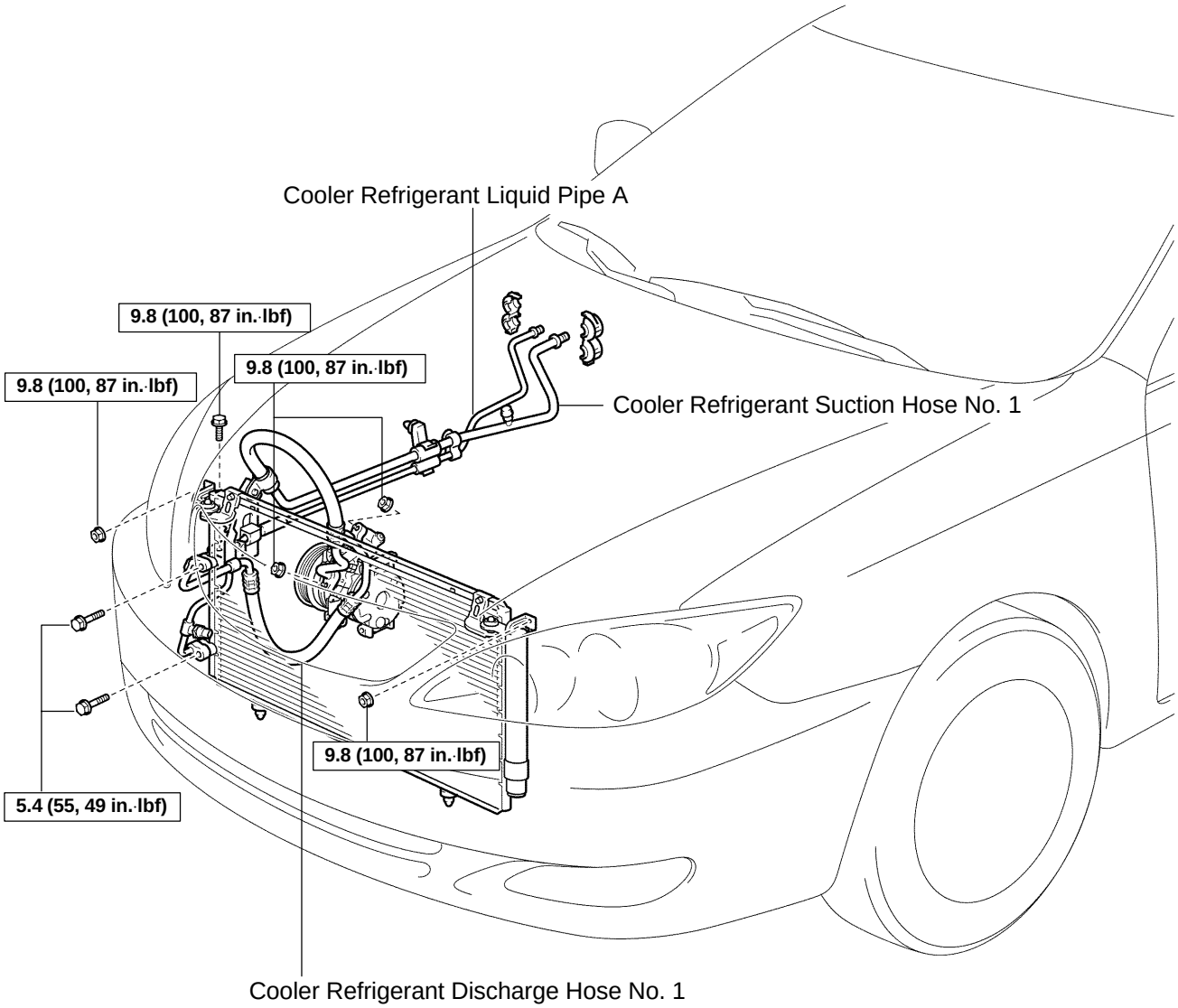

I31330
P

N·m (kgf·cm, ft·lbf) : Specified torque

I40367

2AZ−FE:

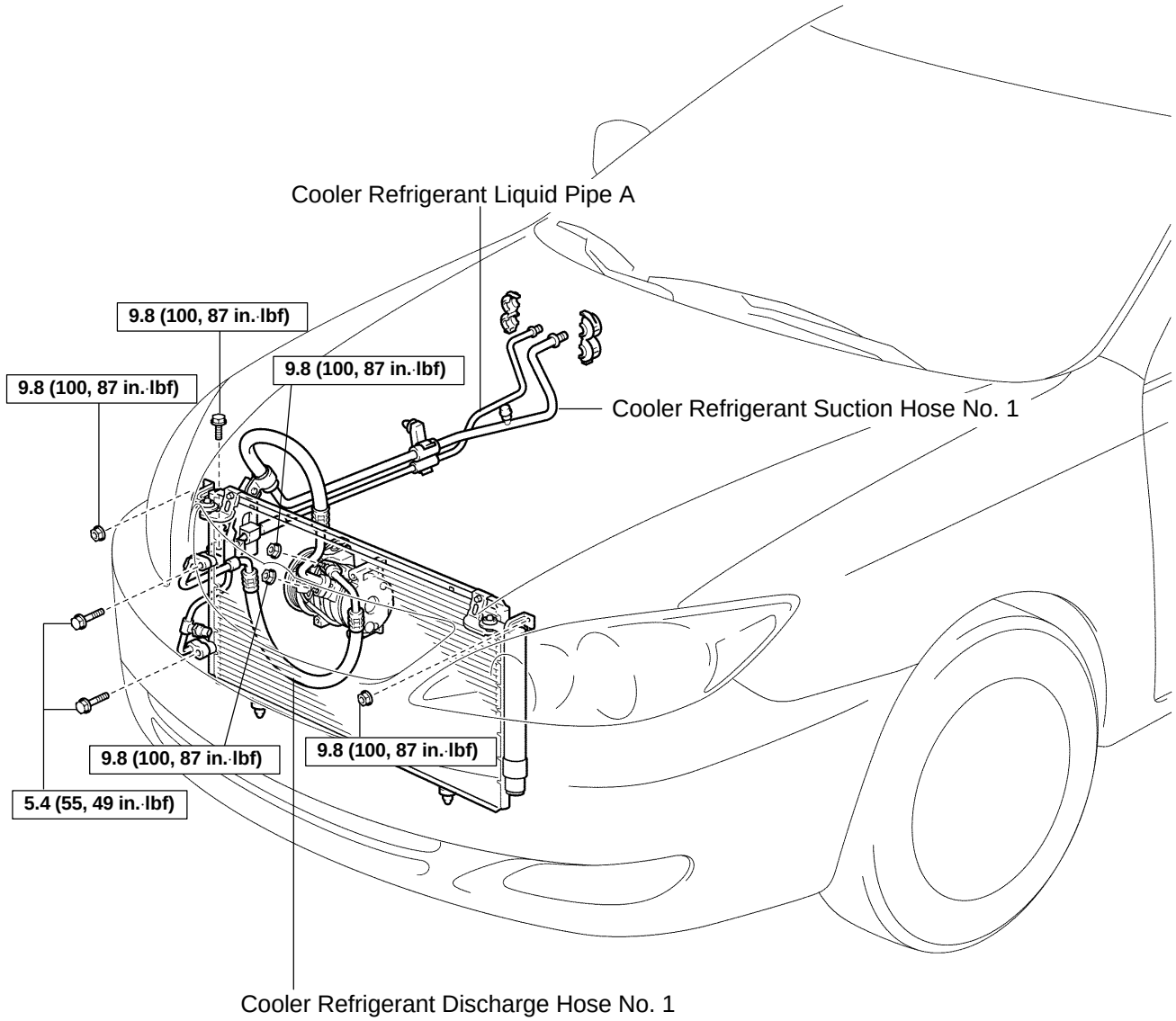

N·m (kgf·cm, ft·lbf) : Specified torque

P

I31331

V (COOLER COMPRESSOR TO CRANKSHAFT PULLEY) BELT NO.1

550BU–03

REPLACEMENT

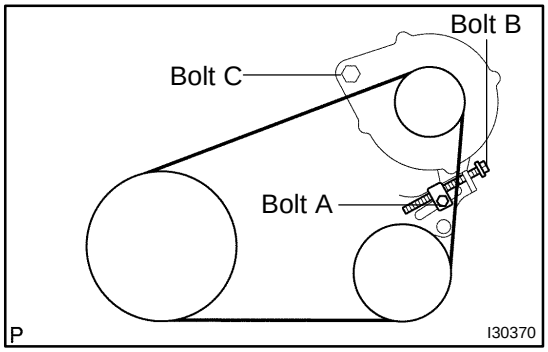

1. REMOVE V (COOLER COMPRESSOR TO CRANKSHAFT PULLEY) BELT NO.1

(a) Loosen the bolt C.
(b) Loosen the bolt A.
(c) Loosen the bolt B and remove the cooler V belt No. 1.

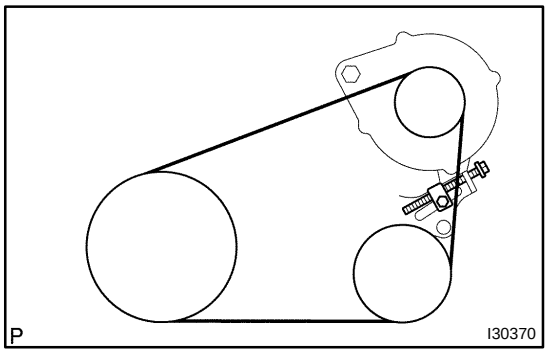

2. INSTALL V (COOLER COMPRESSOR TO CRANKSHAFT PULLEY) BELT NO.1

(a) Temporarily install the cooler V belt No. 1 as illustrated.

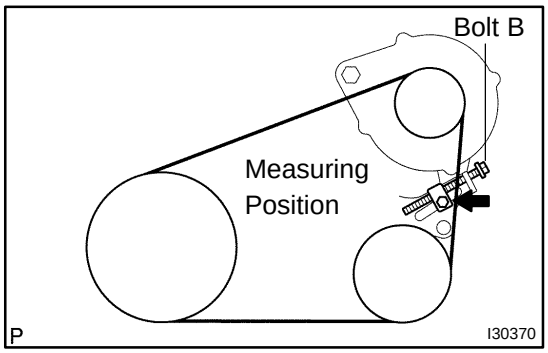

3. ADJUST V (COOLER COMPRESSOR TO CRANKSHAFT PULLEY) BELT NO.1

(a) Apply drive belt tension by turning the bolt B.
Drive belt tension:
New Belt: 165 ± 27 lbf
Used belt: 88 ± 22 lbf

HINT:

- ”New belt” refers to a belt which has been used less than 5 minutes on a running engine.
- ”Used belt” refers to a belt which has been used on a running engine for 5 minutes or more.
- After installing the drive belt, check that it fits properly in the ribbed grooves.

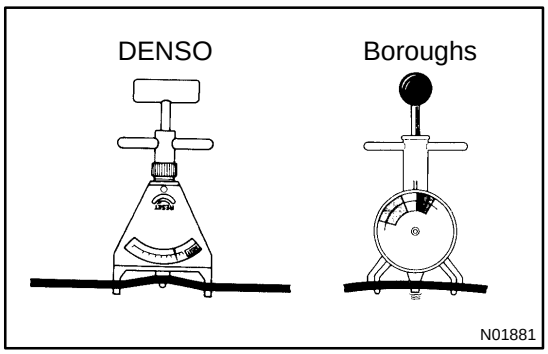

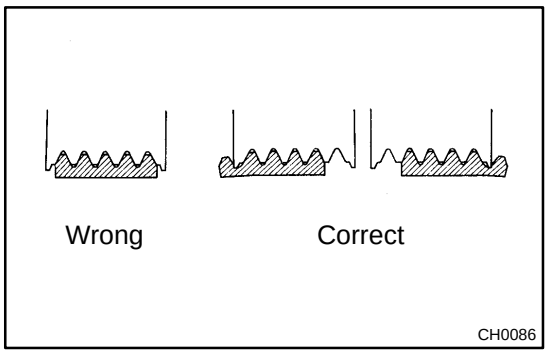

- Check that the drive belt fits properly in the ribbed grooves.

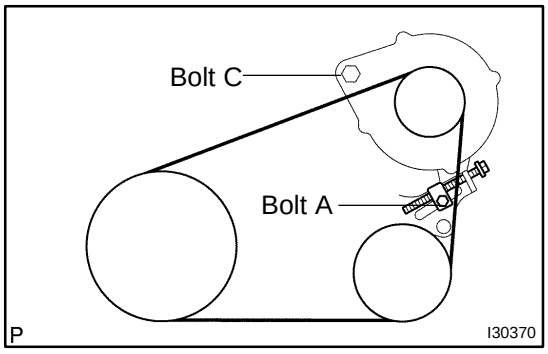

4. FULLY TIGHTEN V (COOLER COMPRESSOR TO CRANKSHAFT PULLEY) BELT NO.1

(a) Tighten the bolt A.
Torque: 17.5 N·m (178 kgf·cm, 12 ft·lbf)

(b) Tighten the bolt C.
Torque: 58 N·m (591 kgf·cm, 43 ft·lbf)

AIR CONDITIONER CONTROL ASSEMBLY

COMPONENTS

550BV−04

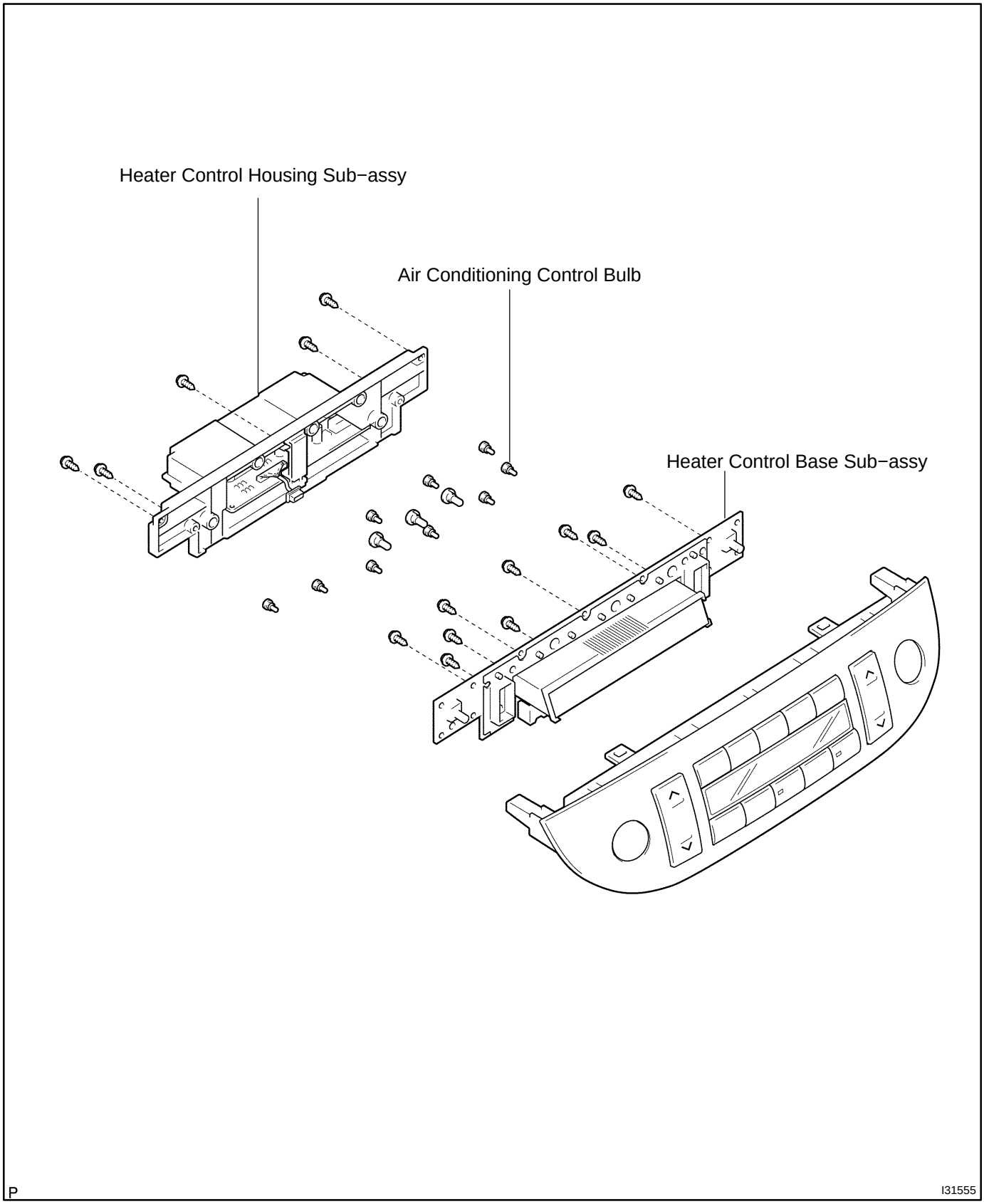

550BW−03

OVERHAUL

HINT:

COMPONENTS: See page 55−28

1. REMOVE AIR CONDITIONER CONTROL ASSEMBLY (See page 71−9)

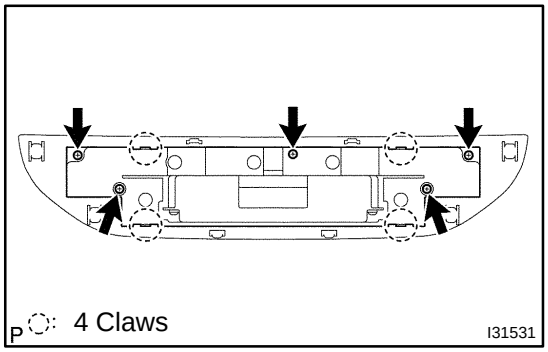

2. REMOVE HEATER CONTROL HOUSING SUB−ASSY

(a) Release the 4 fitting claws, remove the 5 screws.

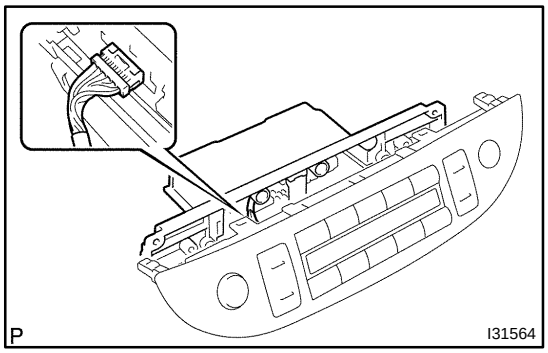

(b) Disconnect the connector, remove the heater control housing sub−assy.

3. REMOVE AIR CONDITIONING CONTROL BULB

(a) Remove the air conditioning control bulb from the heater control base sub−assy.

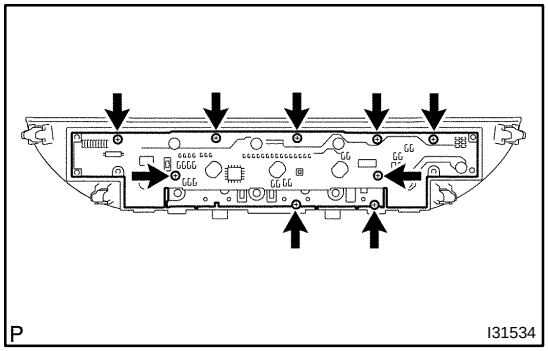

4. REMOVE HEATER CONTROL BASE SUB−ASSY

(a) Remove the 9 screws and heater control base sub−assy.

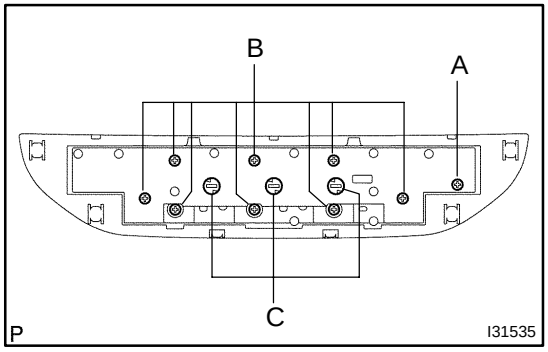

5. INSTALL AIR CONDITIONING CONTROL BULB

(a) Install the air conditioning control bulb to the heater control base sub−assy.

Bulb position:

Position	Part No.
A	90010 − 03054
B	90010 − 03055
C	90010 − 03056

AIR CONDITIONING PANEL SUB−ASSY

550BY−04

COMPONENTS

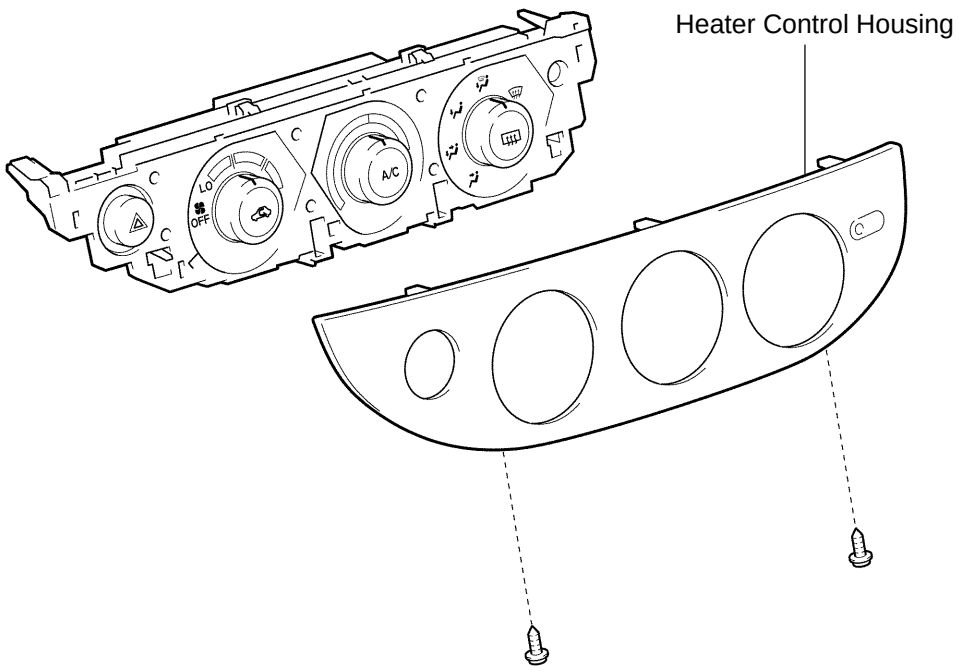

P

I31579

550BZ−03

OVERHAUL

HINT:

COMPONENTS: See page 55−30

1. REMOVE AIR CONDITIONING PANEL SUB−ASSY (See page 71−9)

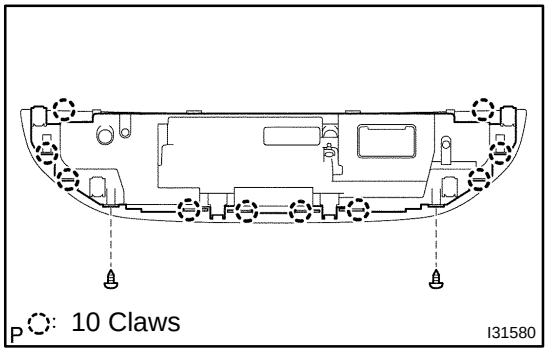

2. REMOVE HEATER CONTROL HOUSING

(a) Remove the 2 screws.

(b) Release the 10 fitting claws, remove the heater control housing.

AIR CONDITIONING RADIATOR ASSY

COMPONENTS

550C0−03

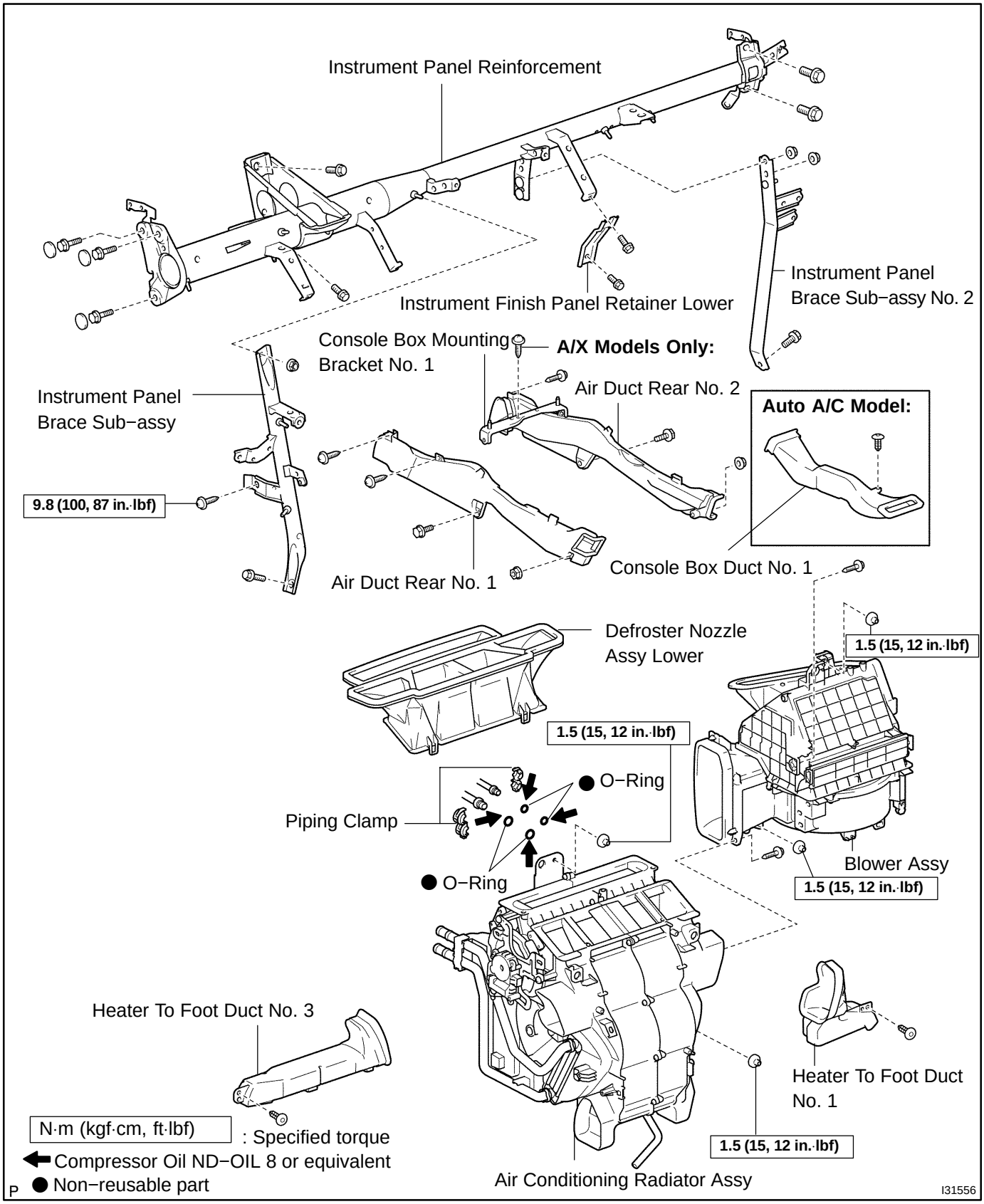

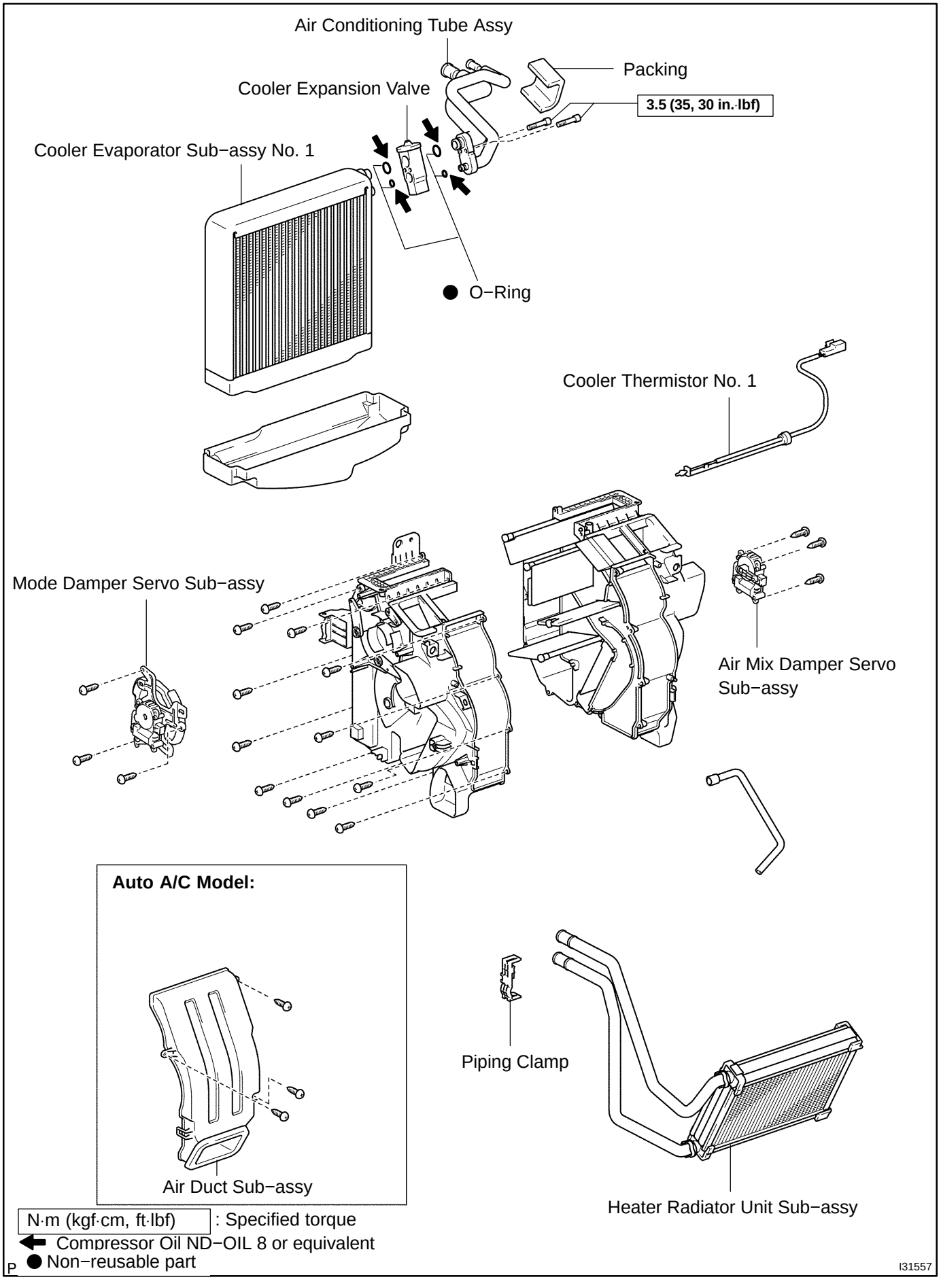
Air Conditioning Tube Assy
Packing
Cooler Expansion Valve
3.5 (35, 30 in.·lbf)
Cooler Evaporator Sub−assy No. 1
● O−Ring
Cooler Thermistor No. 1
Mode Damper Servo Sub−assy
Air Mix Damper Servo Sub−assy
Auto A/C Model:
Air Duct Sub−assy
Piping Clamp
Heater Radiator Unit Sub−assy
N·m (kgf·cm, ft·lbf) : Specified torque
Compressor Oil ND−OIL 8 or equivalent
● Non−reusable part
P
I31557

550C1−03

OVERHAUL

HINT:

COMPONENTS: See page 55−32

1. DISCHARGE REFRIGERANT FROM REFRIGERATION SYSTEM (See page 71−9)

SST 07110−58060 (07117−58080, 07117−58090, 07117−78050, 07117−88060, 07117−88070, 07117−88080)

2. DISCONNECT COOLER REFRIGERANT SUCTION HOSE NO.1

(a) Install SST to piping clamp.

SST 09870−00015

HINT:

Confirm the direction of the piping clamp claw and SST using the illustration showing on the caution label.

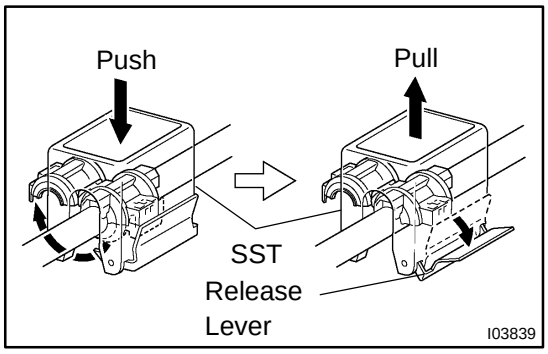

(b) Push down SST and release the clamp lock.

NOTICE:

Be careful not to deform the tube, when pushing SST.

(c) Pull SST slightly and push the release lever, then remove the piping clamp with SST.

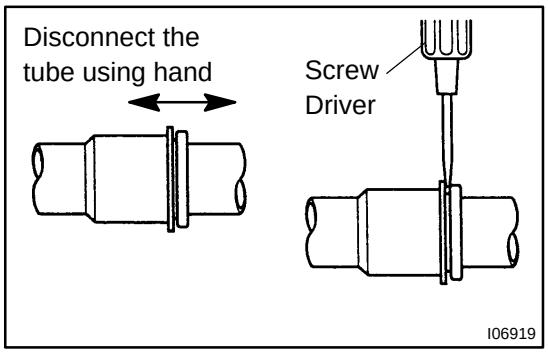

(d) Disconnect the cooler refrigerant suction hose No. 1.

NOTICE:

- **Do not use tools like screwdriver to remove the tube.**
- **Cap the open fittings immediately to keep moisture or dirt out of the system.**

3. DISCONNECT COOLER REFRIGERANT LIQUID PIPE A

SST 09870−00025

HINT:

Disconnect cooler refrigerant liquid pipe A in the same way as the cooler refrigerant suction hose No. 1.

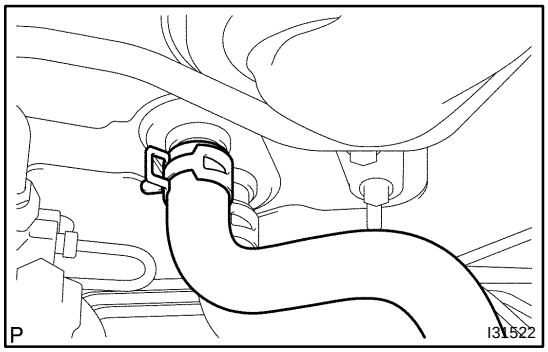

4. DISCONNECT HEATER OUTLET WATER HOSE

(a) Using pliers, grip the claws of clip and slide the clip and disconnect the heater outlet water hose.

5. DISCONNECT HEATER INLET WATER HOSE

HINT:

Disconnect in the same way as the heater outlet water hose.

6. REMOVE INSTRUMENT PANEL SAFETY PAD SUB−ASSY (See page 71−9)

HINT:

Refer to the instructions for removal of the instrument panel safety pad sub−assy.

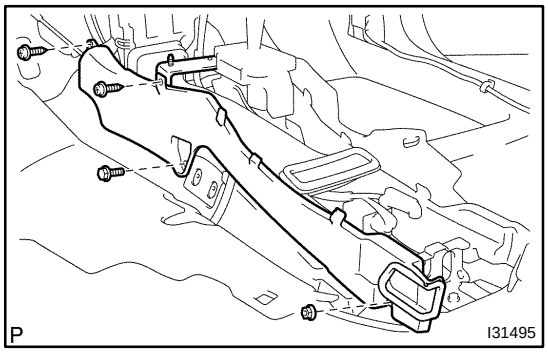

7. REMOVE AIR DUCT REAR NO.1

(a) Remove the 2 screws, bolt and nut.

(b) Remove the air duct rear No. 1.

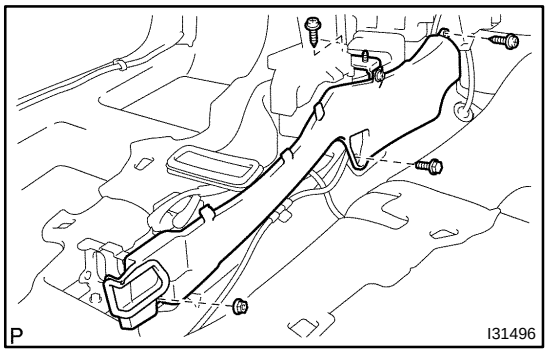

8. REMOVE AIR DUCT REAR NO.2

(a) Remove the bolt and nut.

(b) A/X models:
Remove the 2 screws, air duct rear No. 2 and console box mounting bracket No. 1.

(c) M/X models:
Remove the screw, air duct rear No. 2 and console box mounting bracket No. 1.

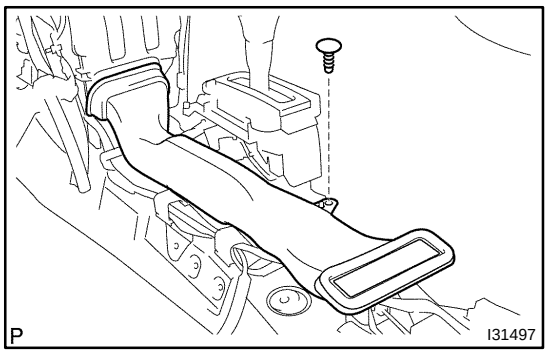

9. REMOVE CONSOLE BOX DUCT NO.1 (AUTO AIR CONDITIONING)

(a) Remove the clip and console box duct No. 1.

10. DISCONNECT FLOOR SHIFT PARKING LOCK CABLE ASSY

11. REMOVE WINDSHIELD WIPER RELAY ASSY

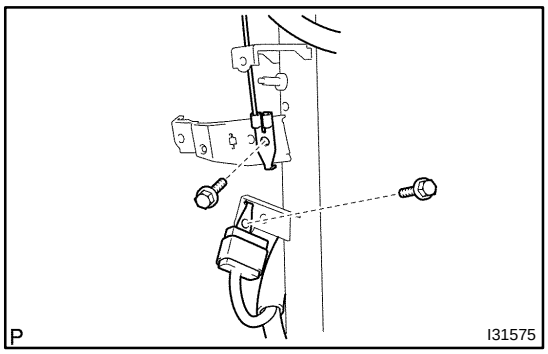

12. REMOVE INSTRUMENT PANEL BRACE SUB−ASSY NO.1

(a) Remove the 2 bolts and 2 earth wires.

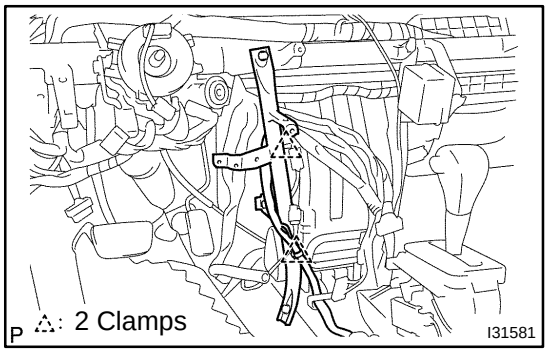

(b) Release the 2 clamps.

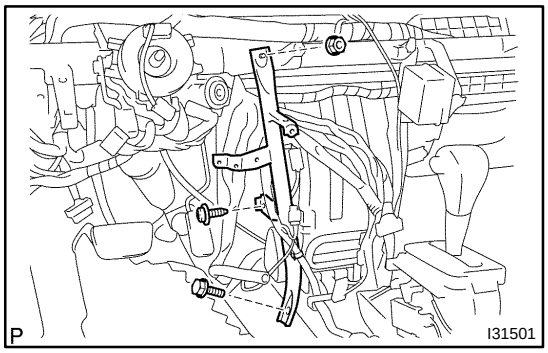

(c) Remove the bolt and screw.

(d) Remove the nut and instrument panel brace sub−assy No. 1.

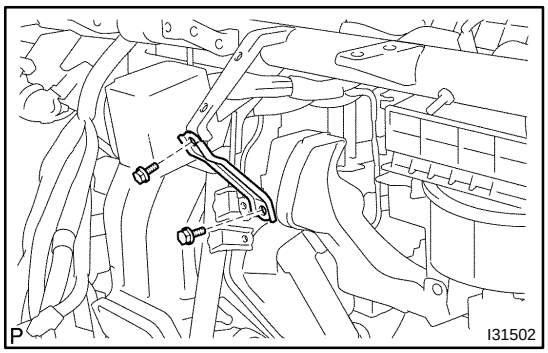

13. REMOVE INSTRUMENT FINISH PANEL RETAINER LOWER

(a) Remove the 2 bolts and instrument finish retainer lower.

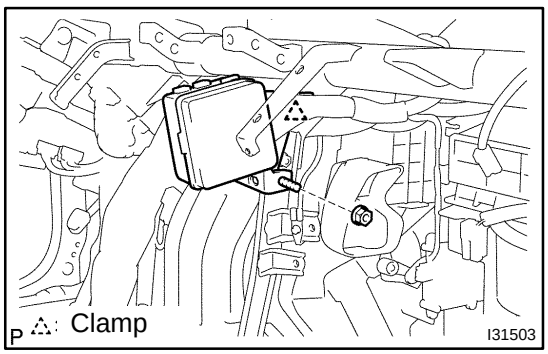

14. REMOVE INSTRUMENT PANEL BRACE SUB−ASSY NO.2

(a) Remove the clamp, nut and passenger side junction block.

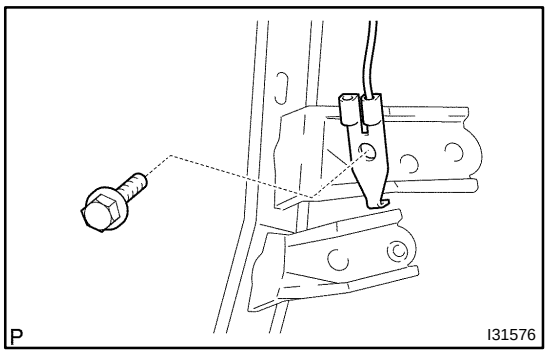

(b) Remove the bolt and earth wire.

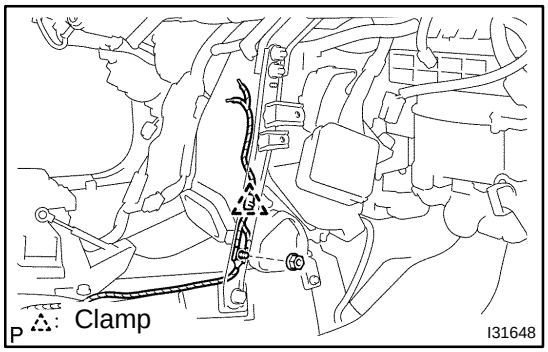

(c) Remove the nut and clamp.

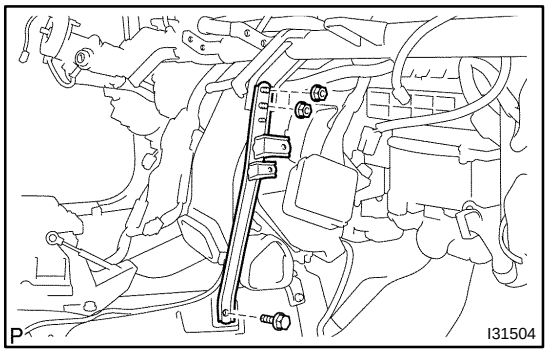

(d) Remove the 2 nuts, bolt and instrument panel brace sub−assy No. 2.

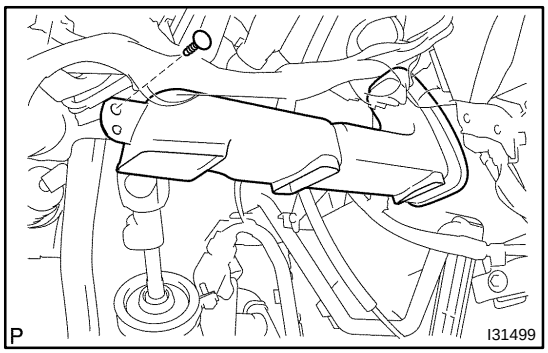

15. REMOVE HEATER TO FOOT DUCT NO.3

(a) Remove the clip and heater to foot duct No. 3.

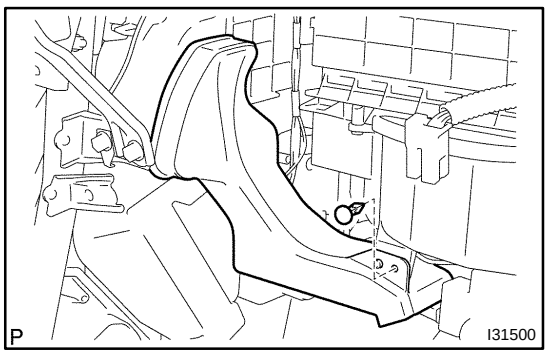

16. REMOVE HEATER TO FOOT DUCT NO.1

(a) Remove the clip and heater to foot duct No. 1.

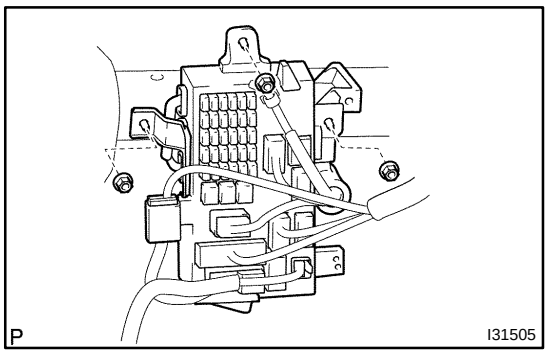

17. DISCONNECT STEERING COLUMN ASSY

(a) Remove the 3 nuts and driver side junction block.

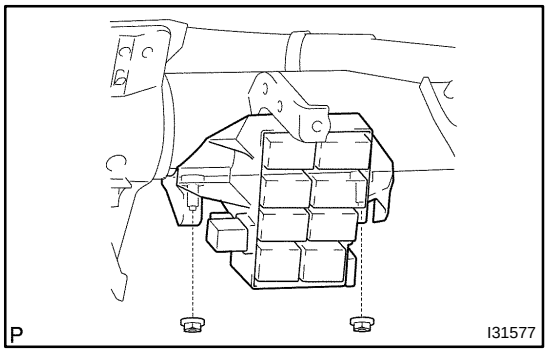

(b) Remove the 2 nuts and steering side connector block.

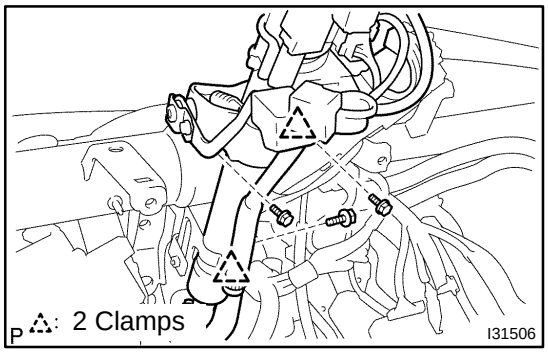

(c) Release the 2 clamps.

(d) Remove the 3 bolts, disconnect the steering column assy.

18. REMOVE INSTRUMENT PANEL REINFORCEMENT

(a) Disconnect the 7 clamps and the wire harness.

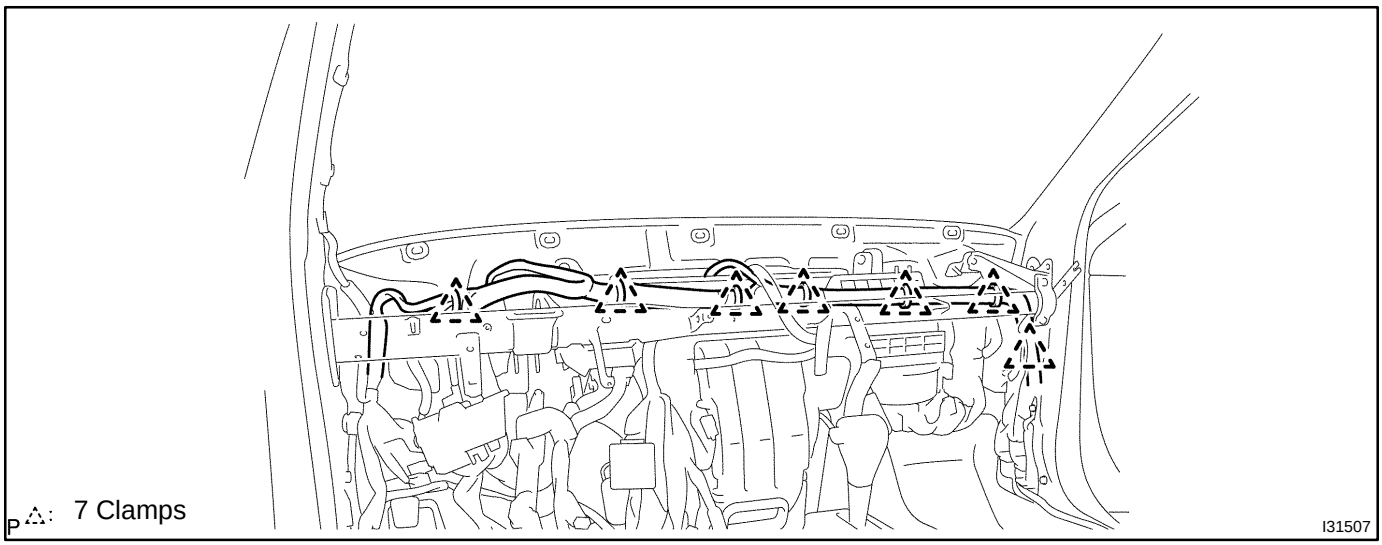

(b) Remove the 3 nuts, disconnect the 3 earth wires.

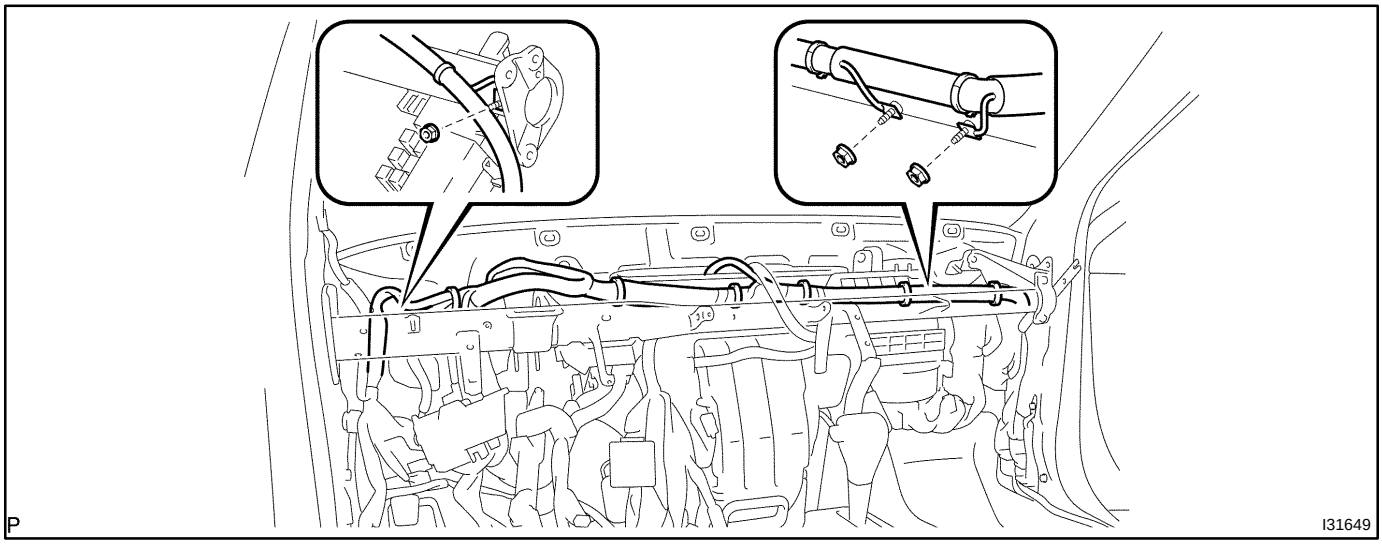

(c) Remove the 3 caps, 7 bolts and instrument panel reinforcement.

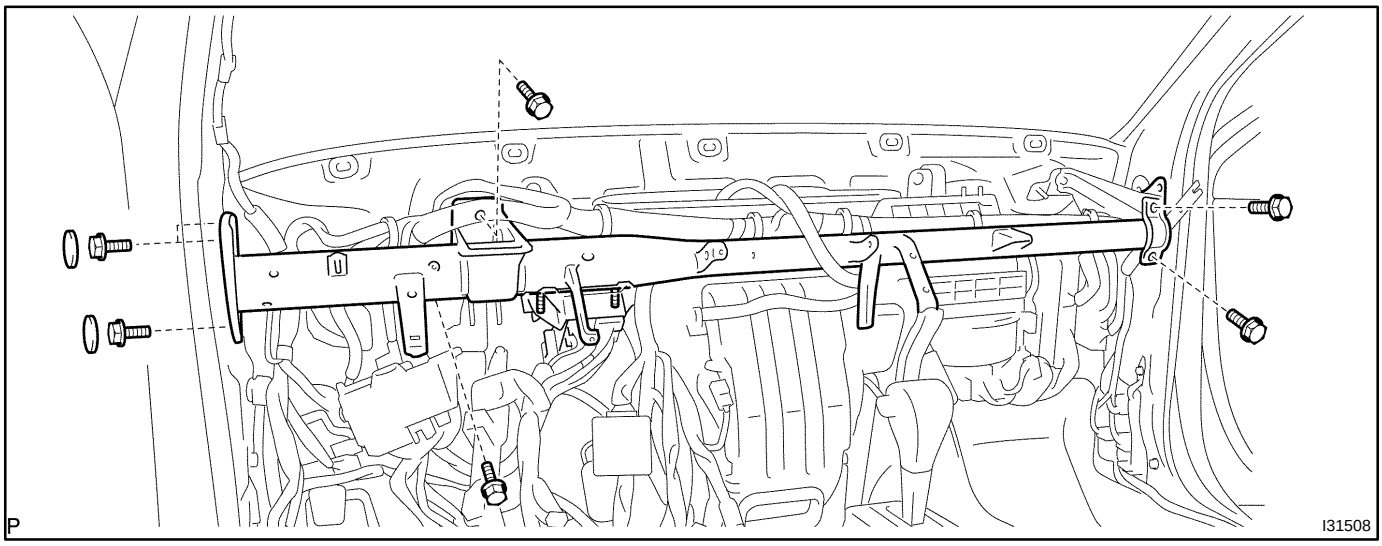

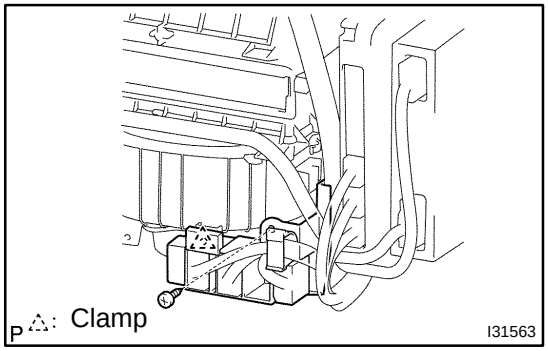

19. REMOVE BLOWER ASSY

(a) Disconnect the connectors.

(b) Remove the screw, clamp and blower connector holder.

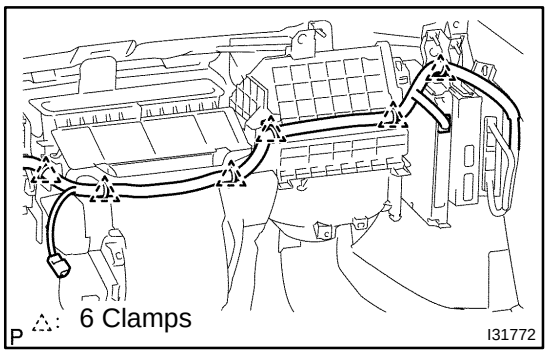

(c) Disconnect the 6 clamps and the wire harness.

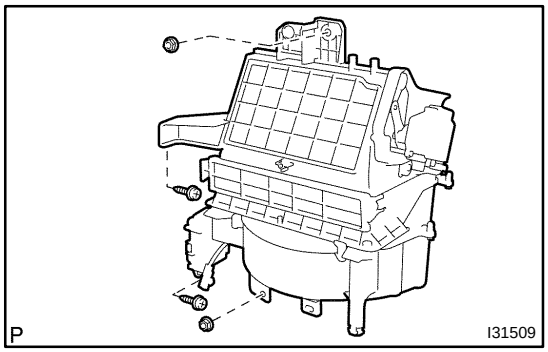

(d) Remove the 2 screws, 2 nuts and blower assy.

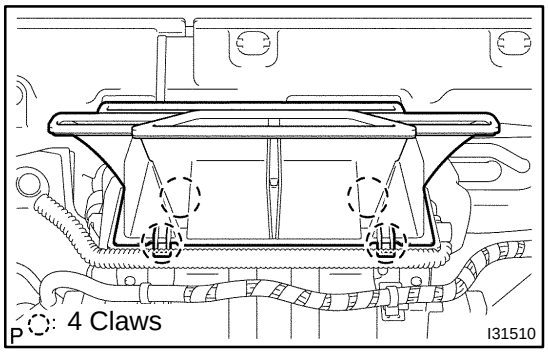

20. REMOVE DEFROSTER NOZZLE ASSY LOWER

(a) Release the 4 fitting claws, remove the defroster nozzle assy lower.

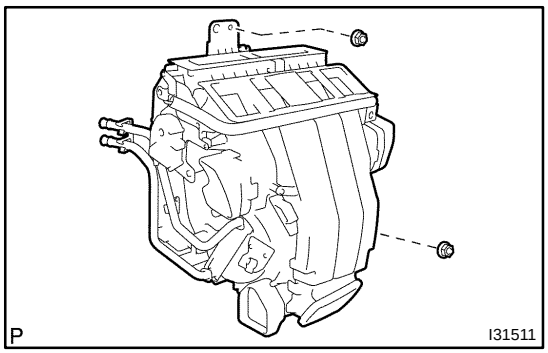

21. REMOVE AIR CONDITIONING RADIATOR ASSY

(a) Disconnect the connectors.

(b) Remove the 2 nuts and air conditioning radiator assy.

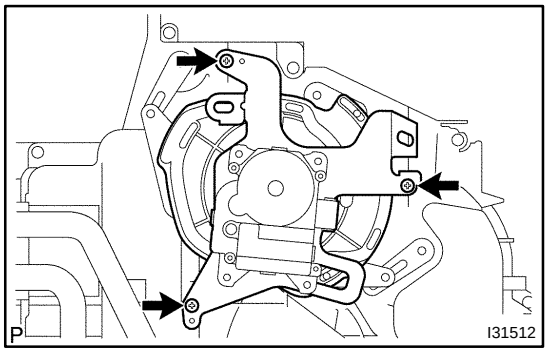

22. REMOVE MODE DAMPER SERVO SUB−ASSY

(a) Remove the 3 screws and mode damper servo sub−assy.

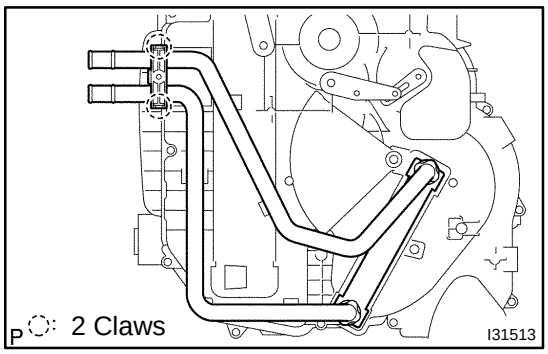

23. REMOVE HEATER RADIATOR UNIT SUB−ASSY

(a) Release the 2 fitting claws, remove the piping clamp.

(b) Remove the heater radiator unit sub−assy.

NOTICE:

Prepare a support plate and waste to catch the leaked coolant.

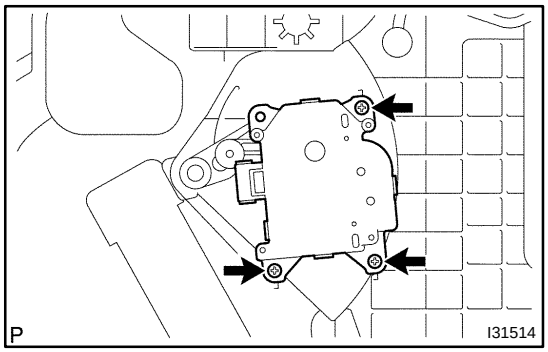

24. REMOVE AIRMIX DAMPER SERVO SUB−ASSY

(a) Remove the 3 screws and air mix damper servo sub−assy.

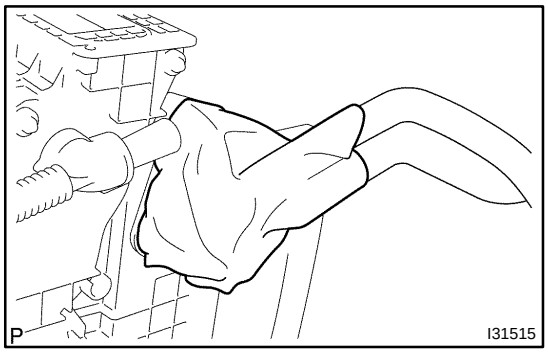

25. REMOVE AIR CONDITIONING TUBE ASSY

(a) Remove the packing.

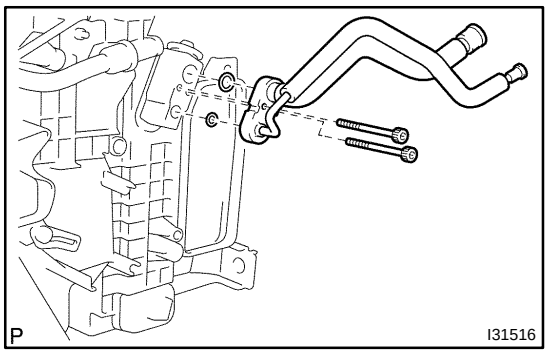

(b) Using a hexagon wrench 4 mm (0.16 in.), remove the 2 hexagon bolts and air conditioning tube assy.

(c) Remove the 2 O−rings from the air conditioning tube assy.

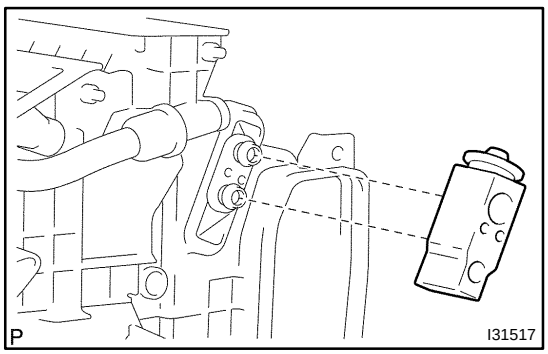

26. REMOVE COOLER EXPANSION VALVE

(a) Remove the cooler expansion valve from the cooler evaporator sub−assy No. 1.

27. REMOVE COOLER THERMISTOR NO.1

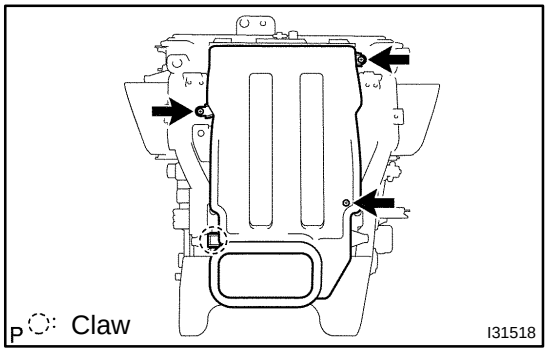

28. REMOVE COOLER EVAPORATOR SUB−ASSY NO.1

(a) Auto A/C model:
Release the fitting claw, remove the 3 screws and air duct sub−assy.

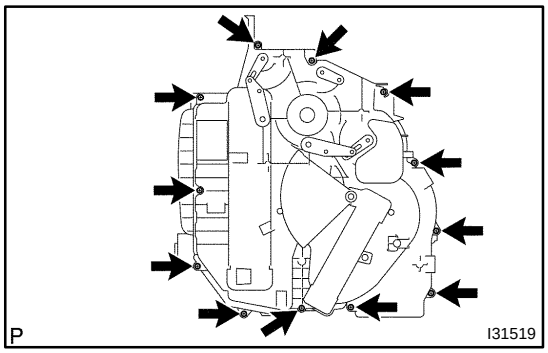

(b) Remove the 12 screws and heater case LH.

(c) Remove the cooler evaporator sub−assy No. 1 from the heater case RH.

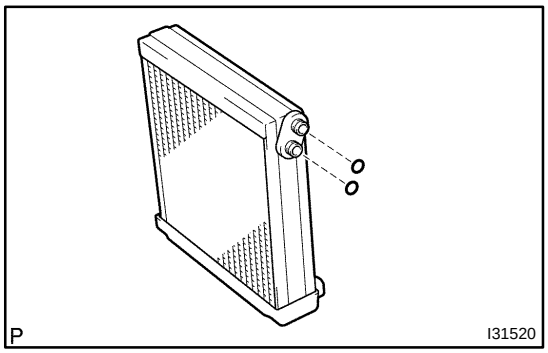

(d) Remove the 2 O−rings from the cooler evaporator sub−assy No. 1.

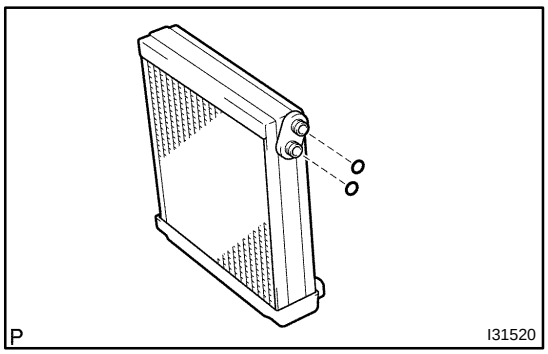

29. INSTALL COOLER EVAPORATOR SUB−ASSY NO.1

(a) Apply compressor oil to the contact surfaces of 2 new O−rings and the cooler expansion valve and install them.
Compressor oil: ND−OIL 8 or equivalent

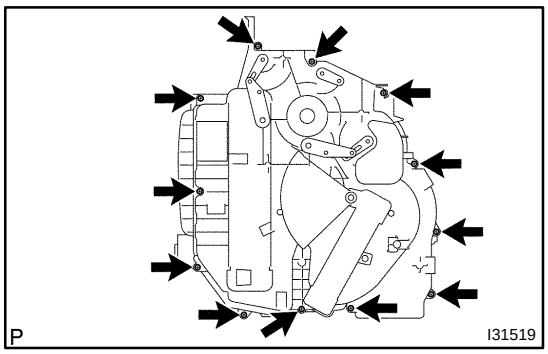

(b) Install the cooler evaporator sub−assy No. 1 to the heater case RH.

(c) Install the heater case LH with the 12 screws.

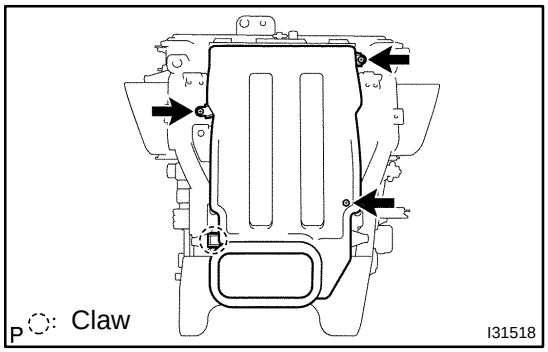

(d) Auto A/C model:
Install the air duct sub−assy with the 3 screws.

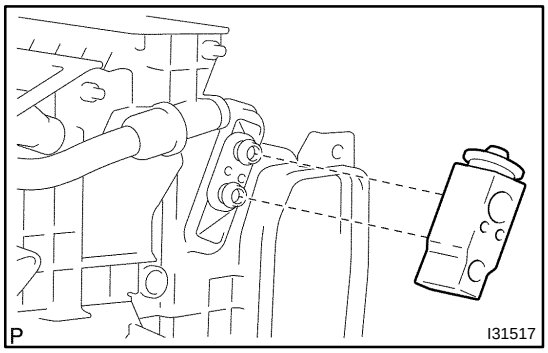

30. INSTALL COOLER EXPANSION VALVE

(a) Install the cooler expansion valve to the cooler evaporator No. 1.

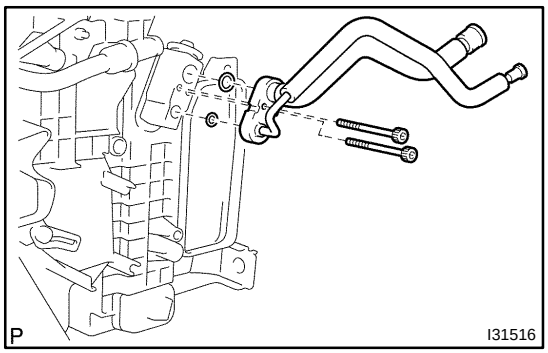

31. INSTALL AIR CONDITIONING TUBE ASSY

(a) Apply compressor oil to the contact surfaces of 2 new O−rings and the air conditioning tube assy and install them.
Compressor oil: ND−OIL 8 or equivalent

(b) Using a hexagon wrench 4 mm (0.16 in.), install the air conditioner tube assy and 2 hexagon bolts to the cooler evaporator sub−assy No. 1.
Torque: 3.5 N·m (35 kgf·cm, 30 in.·lbf)

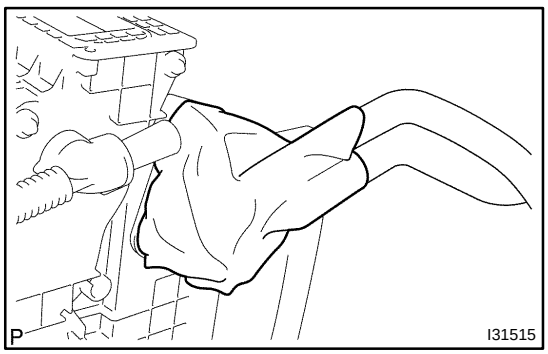

(c) Install the packing.

HINT:
Securely attach so that the gap in the packing will not be mode.

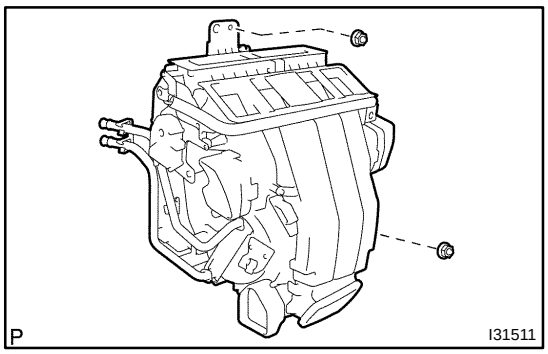

32. INSTALL AIR CONDITIONING RADIATOR ASSY

(a) Install the air conditioning radiator assy with the 2 nuts.
Torque: 1.5 N·m (15 kgf·cm, 12 in.·lbf)

(b) Connect the connector.

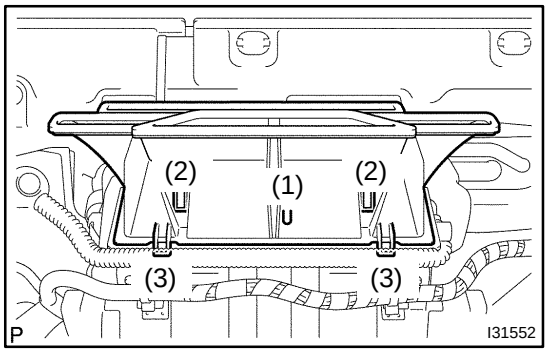

33. INSTALL DEFROSTER NOZZLE ASSY LOWER

(a) Install the defroster nozzle assy lower.

NOTICE:

After locating the pin (1) in the illustration, install (2), then (3).

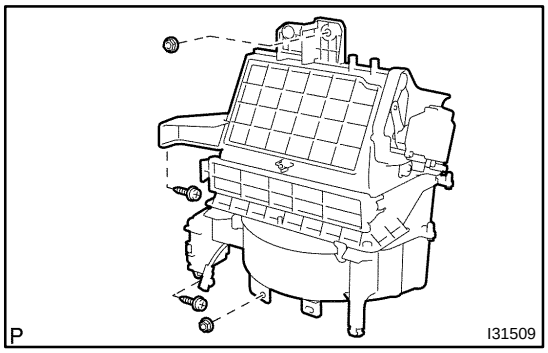

34. INSTALL BLOWER ASSY

(a) Install the blower assy with the 2 screws and 2 nuts.
Torque: 1.5 N·m (15 kgf·cm, 12 in.·lbf)

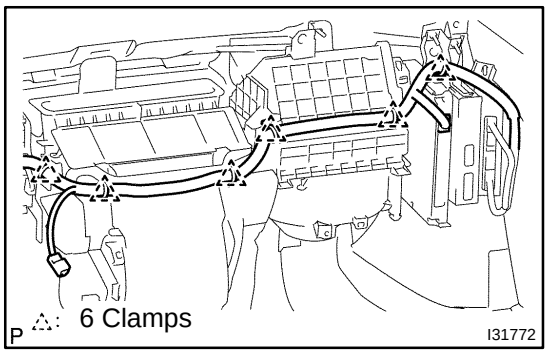

(b) Install the 6 clamps, connect the wire harness.

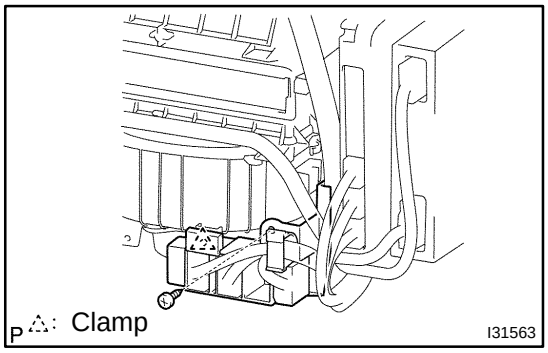

(c) Install the blower connector holder with the screw and clamp.

(d) Connect the connectors.

35. INSTALL INSTRUMENT PANEL REINFORCEMENT

(a) Install the instrument panel reinforcement with the 7 bolts and 3 caps.

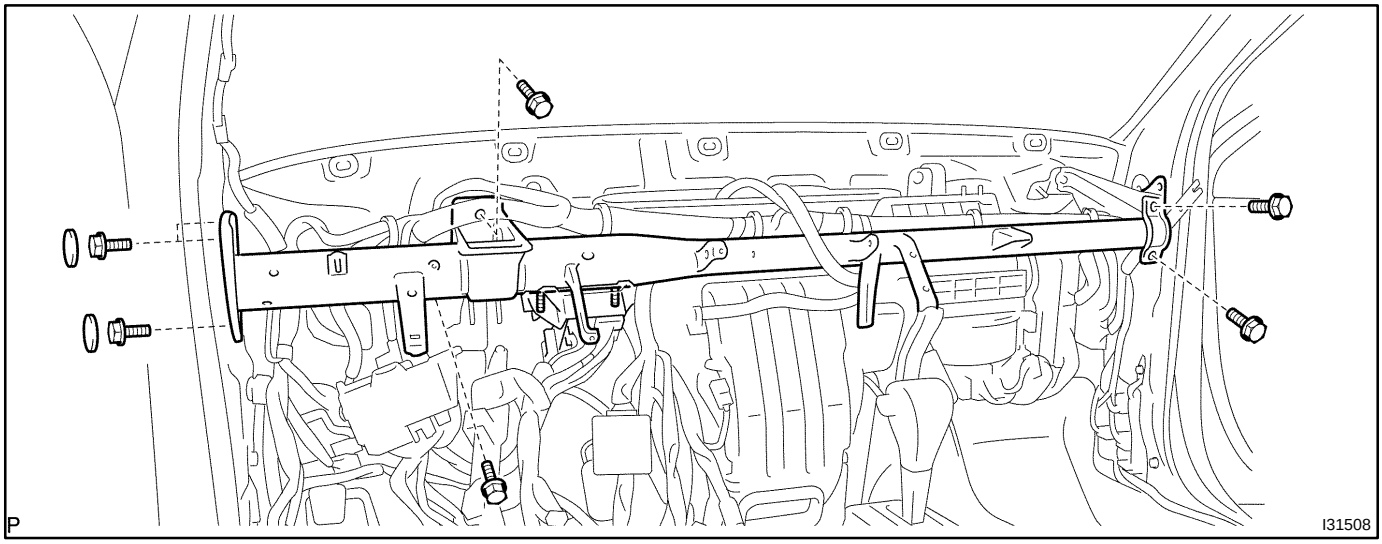

(b) Install the 3 earth wires with the 3 nuts.

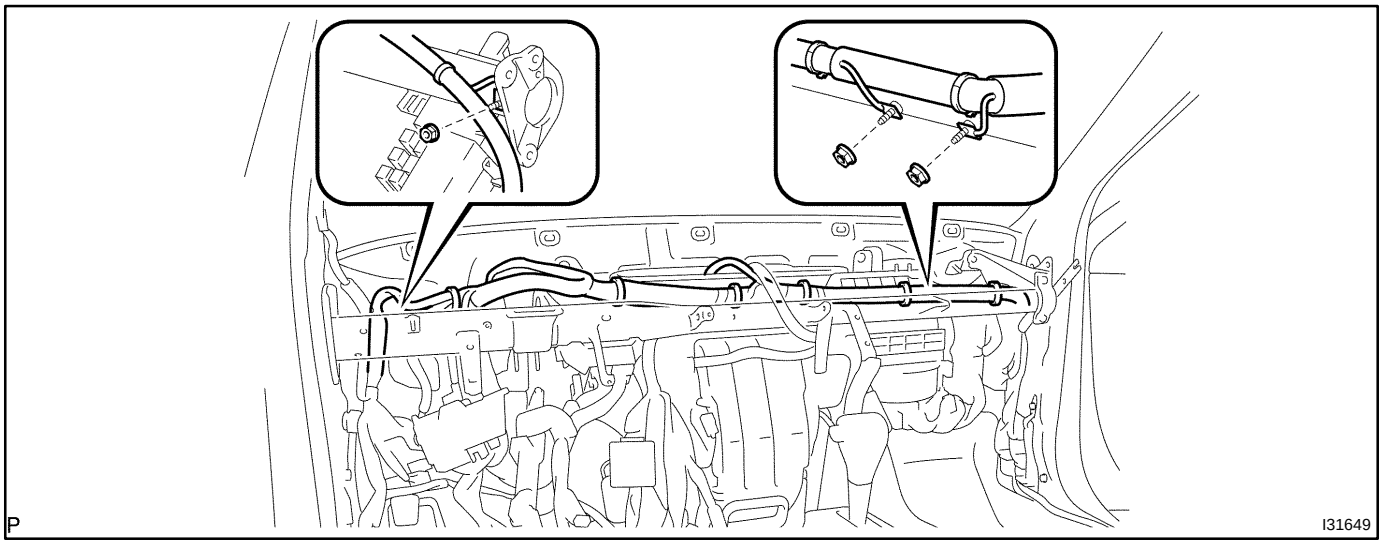

(c) Install the 7 clamps, connect the wire harness.

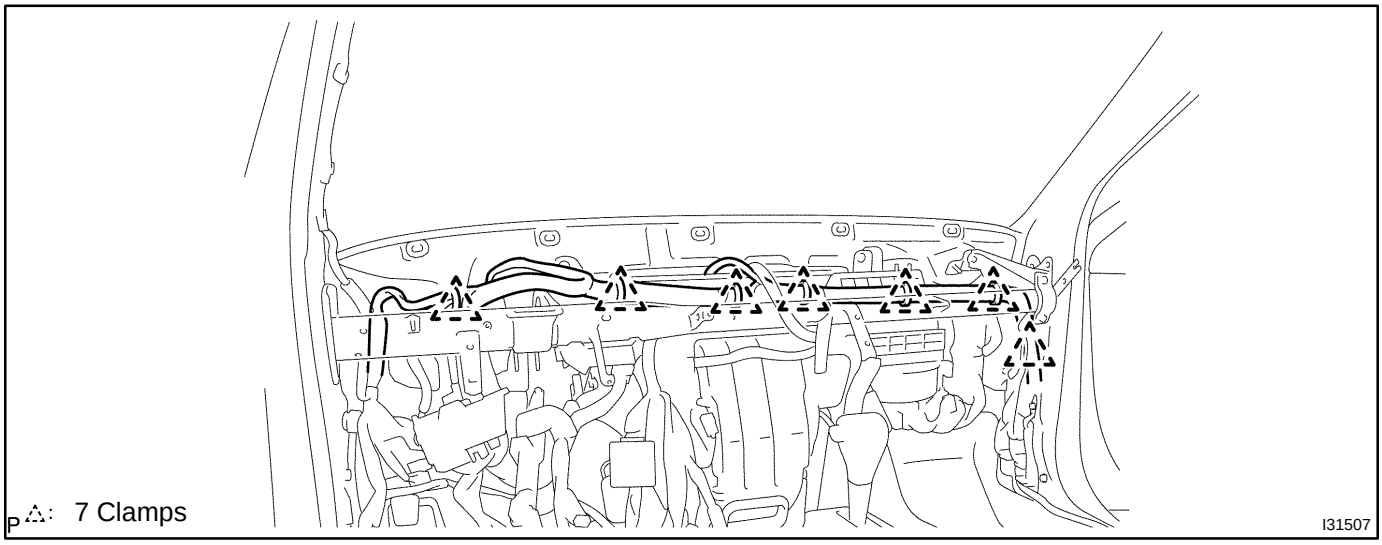

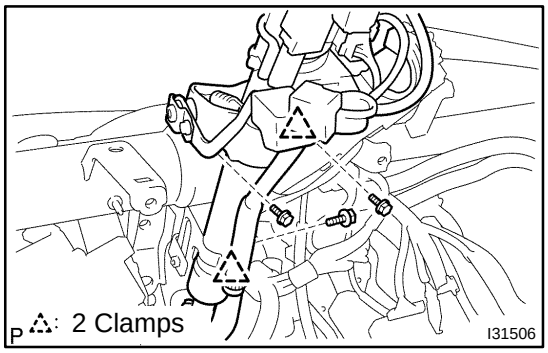

36. INSTALL STEERING COLUMN ASSY

(a) Install the steering column assy with the 3 bolts.

(b) Install the 2 clamps.

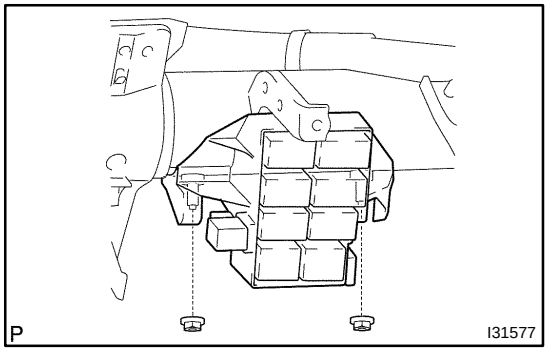

(c) Install the steering side connector block with the 2 nuts.
Torque: 8.4 N·m (85 kgf·cm, 73 in.·lbf)

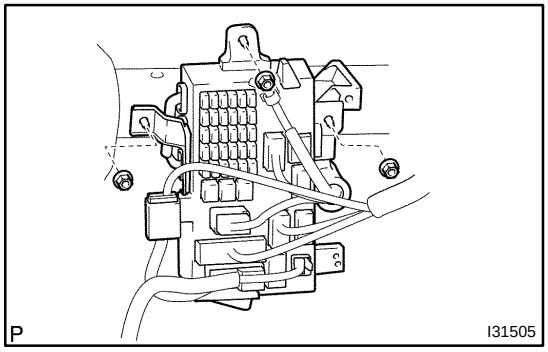

(d) Install the driver side junction block with the 3 nuts.
Torque: 8.4 N·m (85 kgf·cm, 73 in.·lbf)

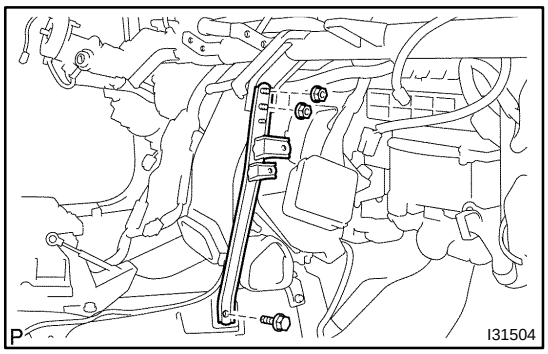

37. INSTALL INSTRUMENT PANEL BRACE SUB−ASSY NO.2

(a) Install the instrument panel brace sub−assy No. 2 with the 2 nuts and bolt.

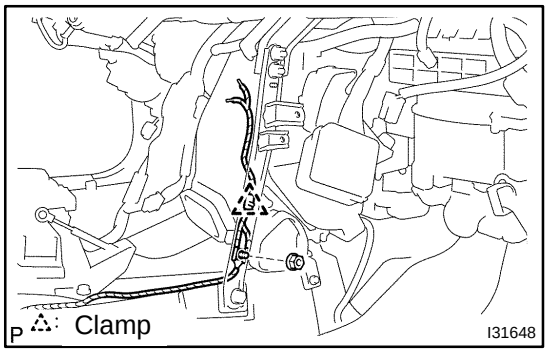

(b) Install the nut and clamp.

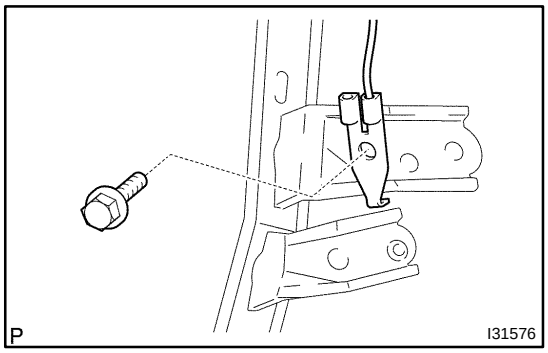

(c) Install the earth wire with the bolt.

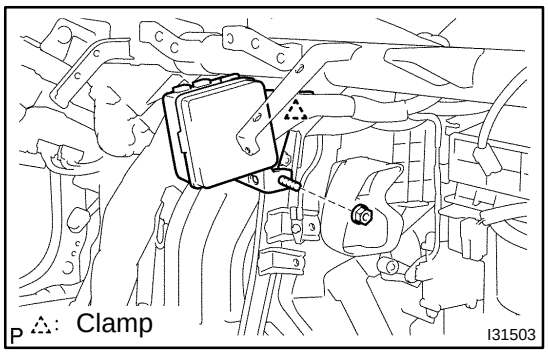

(d) Install the passenger side junction block with the nut and clamp.
Torque: 8.4 N·m (85 kgf·cm, 73 in.·lbf)

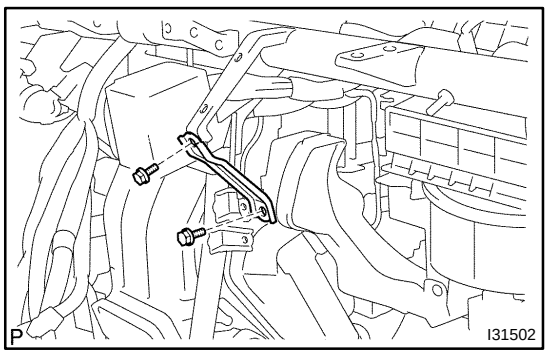

38. INSTALL INSTRUMENT FINISH PANEL RETAINER LOWER

(a) Install the instrument finish panel retainer lower with the 2 bolts.

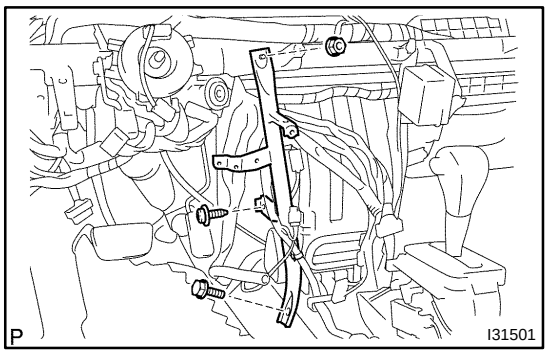

39. INSTALL INSTRUMENT PANEL BRACE SUB−ASSY NO.1

(a) Install the instrument panel brace sub−assy No. 1 with the nut.

(b) Install the bolt and screw.
Torque: 9.8 N·m (100 kgf·cm, 87 in.·lbf) (Screw)

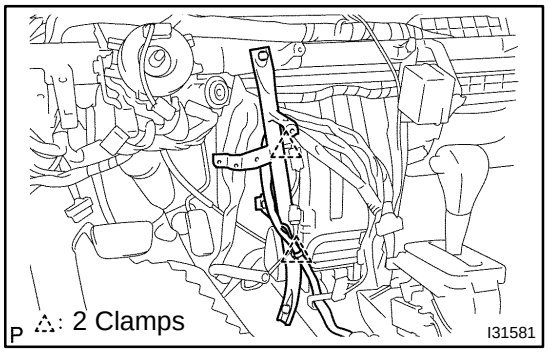

(c) Install the 2 clamps.

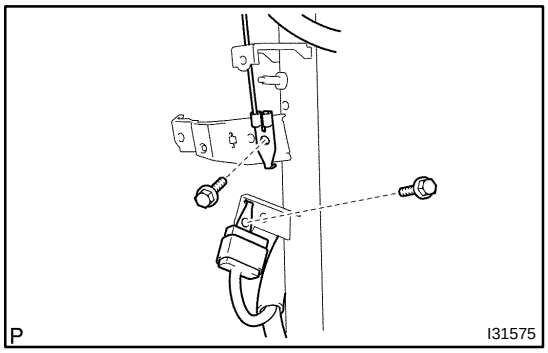

(d) Install the 2 earth wires with the 2 bolts.

40. INSTALL INSTRUMENT PANEL SAFETY PAD SUB−ASSY (See page 71−9)

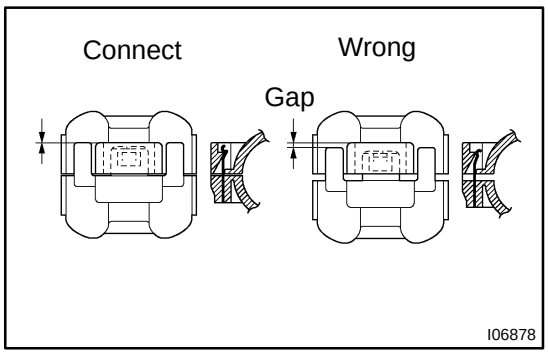

41. INSTALL COOLER REFRIGERANT SUCTION HOSE NO.1

(a) Lubricate new O−ring with compressor oil and install them to the hose.
Compressor oil: ND−OIL 8 or equivalent

(b) Install the cooler refrigerant suction hose No.1 and piping clamp.

HINT:
After connection, check the fitting for claw of the piping clamp.

42. INSTALL COOLER REFRIGERANT LIQUID PIPE A

HINT:
Install in the same way as the cooler refrigerant suction hose No. 1.

43. ADD COOLANT
3MZ−FE: (See page 16−27)
1MZ−FE: (See page 16−27)
2AZ−FE: (See page 16−6)

44. CHARGE REFRIGERANT (See page 55−22)
SST 07110−58060 (07117−58060, 07117−58070, 07117−58080, 07117−58090, 07117−78050, 07117−88060, 07117−88070, 07117−88080)
Specified amount: 550 ± 50 g (19.37 ± 1.76 oz.)

45. WARM UP ENGINE

46. CHECK FOR ENGINE COOLANT LEAKS
3MZ−FE: (See page 16−27)
1MZ−FE: (See page 16−27)
2AZ−FE: (See page 16−6)

47. INSPECT LEAKAGE OF REFRIGERANT (See page 55−22)

BLOWER ASSY

COMPONENTS

550C2−03

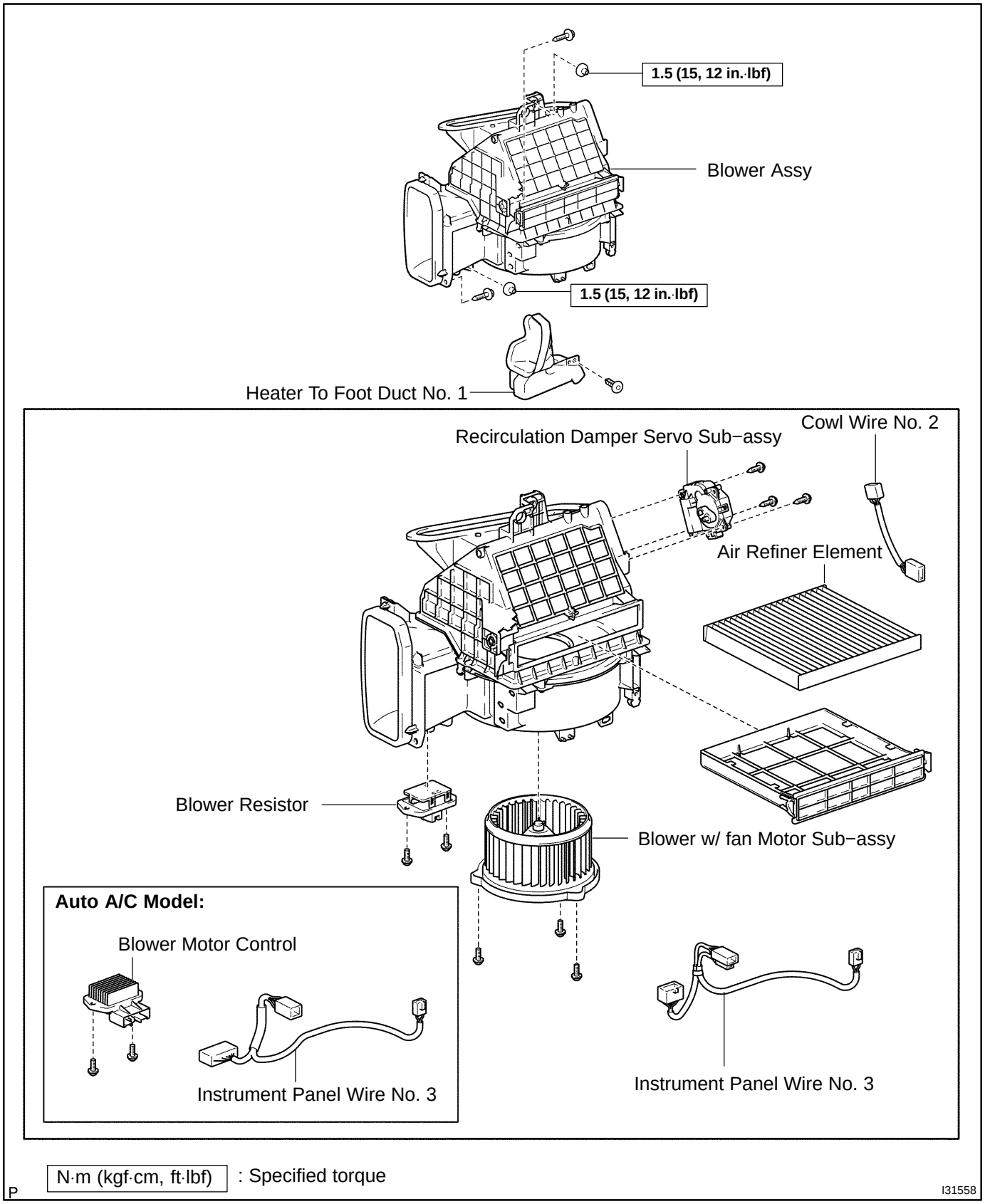

N·m (kgf·cm, ft·lbf) : Specified torque

P

I31558

550C3−03

OVERHAUL

HINT:

COMPONENTS: See page 55−50

1. **REMOVE INSTRUMENT PANEL SAFETY PAD SUB−ASSY (See page 71−9)**
2. **REMOVE HEATER TO FOOT DUCT NO.1 (See page 71−9)**
3. **REMOVE BLOWER ASSY (See page 55−34)**
4. **REMOVE CLEAN AIR FILTER**

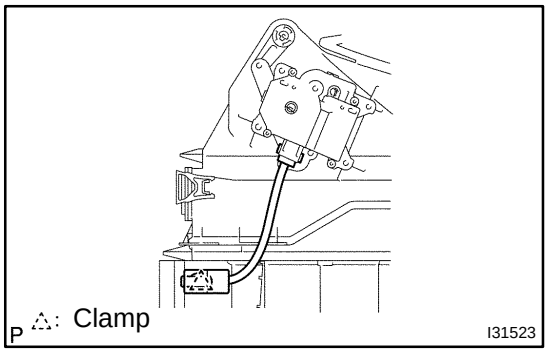

5. REMOVE COWL WIRE NO.2

(a) Remove the clamp and cowl wire No. 2.

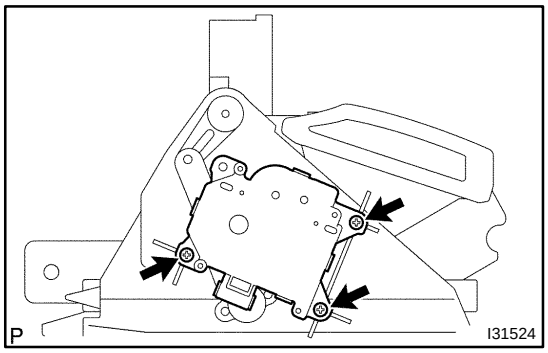

6. REMOVE RECIRCULATION DAMPER SERVO SUB−ASSY

(a) Remove the 3 screws and recirculation damper servo sub−assy.

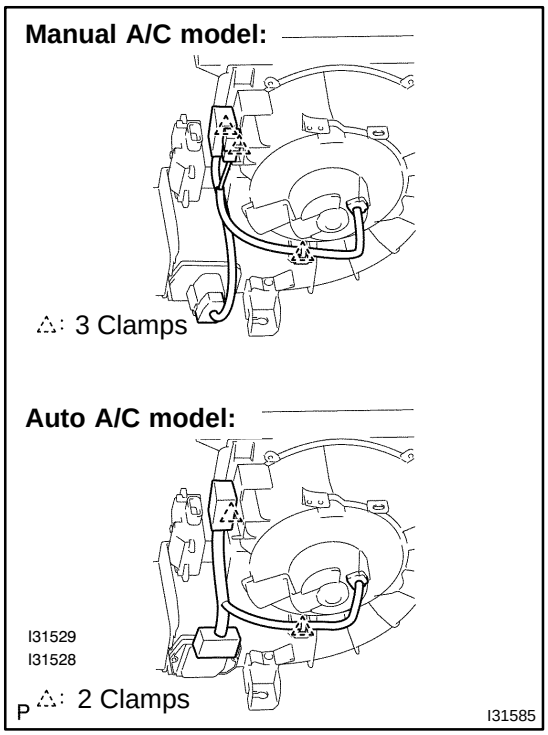

7. REMOVE INSTRUMENT PANEL WIRE NO.3

(a) Manual A/C model:
Disconnect the connectors, remove the 3 clamps and instrument panel wire No. 3.

(b) Auto A/C model:
Disconnect the connectors, remove the 2 clamps and instrument panel wire No. 3.

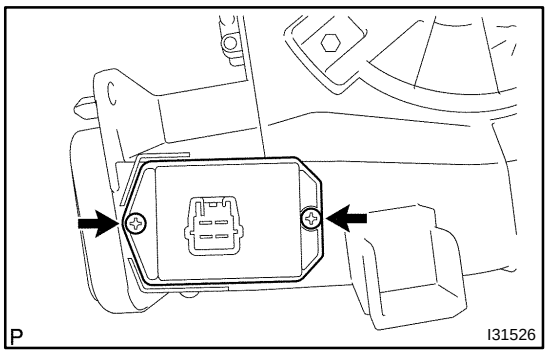

8. REMOVE BLOWER RESISTOR (MANUAL AIR CONDITIONING)

(a) Remove the 2 screws and blower resistor.

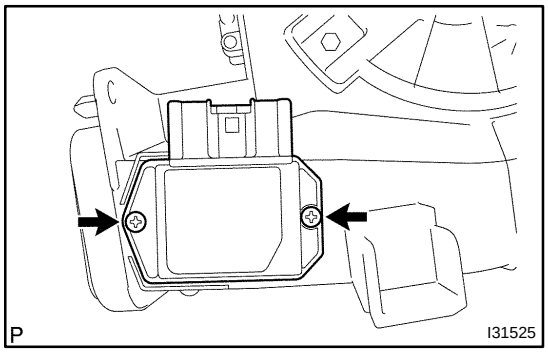

9. REMOVE BLOWER MOTOR CONTROL (AUTO AIR CONDITIONING)

(a) Remove the 2 screws and blower motor control.

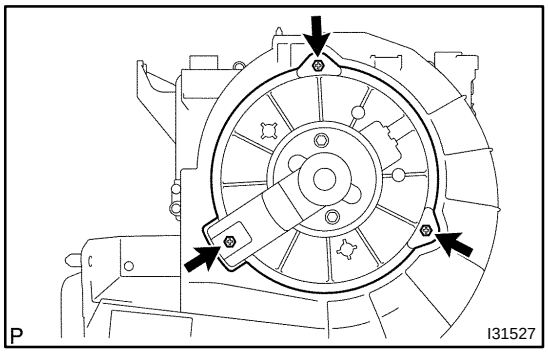

10. REMOVE BLOWER W/FAN MOTOR SUB−ASSY

(a) Remove the 3 screws and blower w/fan motor sub−assy.

11. INSTALL BLOWER ASSY (See page 55−34)

12. INSTALL INSTRUMENT PANEL SAFETY PAD SUB−ASSY (See page 71−9)

COOLER COMPRESSOR ASSY (3MZ−FE)

55159−02

COMPONENTS

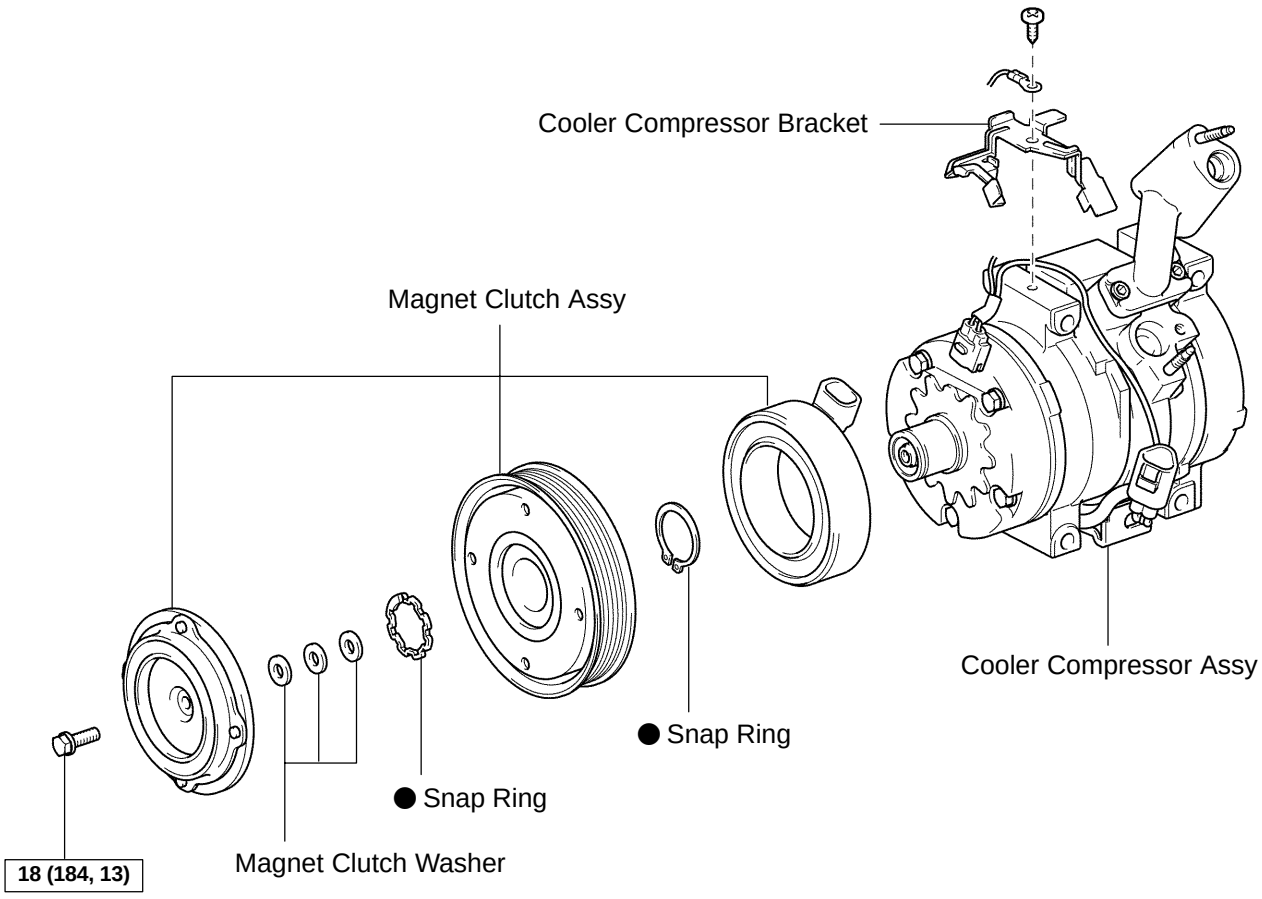

N·m (kgf·cm, ft·lbf) : Specified torque

● Non−reusable part

P

I31774

5515A−02

REPLACEMENT

HINT:

COMPONENTS: See page 55−53

1. **DISCHARGE REFRIGERANT FROM REFRIGERATION SYSTEM (See page 55−22)**
   SST 07110−58060 (07117−58080, 07117−58090, 07117−78050, 07117−88060, 07117−88070, 07117−88080)
2. **REMOVE V (COOLER COMPRESSOR TO CRANKSHAFT PULLEY) BELT NO.1 (See page 55−26)**
3. **REMOVE GENERATOR ASSY (See page 19−42)**

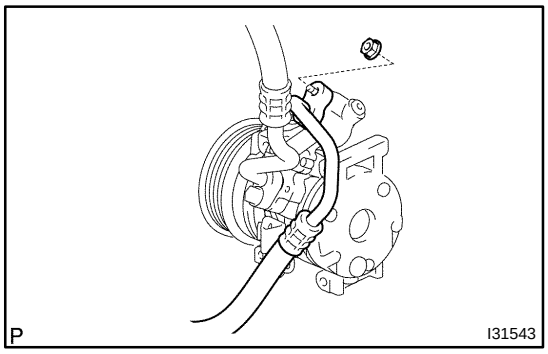

4. **DISCONNECT COOLER REFRIGERANT DISCHARGE HOSE NO.1**
(a) Remove the nut and disconnect the cooler refrigerant discharge hose No.1.
(b) Remove the O−ring from the cooler refrigerant discharge hose No.1.

NOTICE:
Seal the opening of the disconnected parts using vinyl tape to prevent moisture and foreign matter from entering.

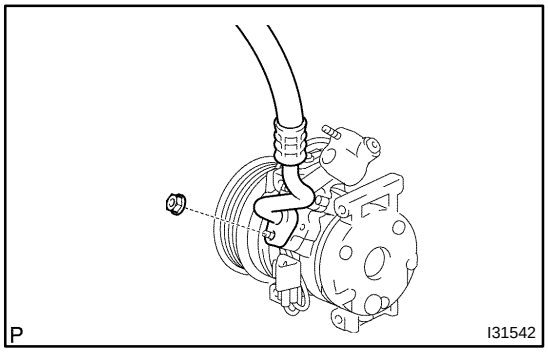

5. **DISCONNECT COOLER REFRIGERANT SUCTION HOSE NO.1**
(a) Remove the nut and disconnect the cooler refrigerant suction hose No.1.
(b) Remove the O−ring from the cooler refrigerant suction hose No.1.

NOTICE:
Seal the opening of the disconnected parts using vinyl tape to prevent moisture and foreign matter from entering.

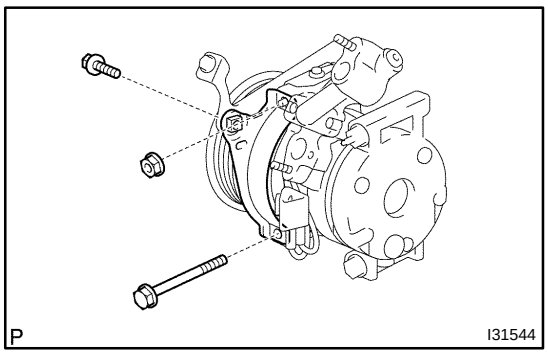

6. **REMOVE COMPRESSOR AND MAGNETIC CLUTCH**
(a) Disconnect the connector and clamp.
(b) Remove the 2 bolts, nut and cooler compressor bracket.

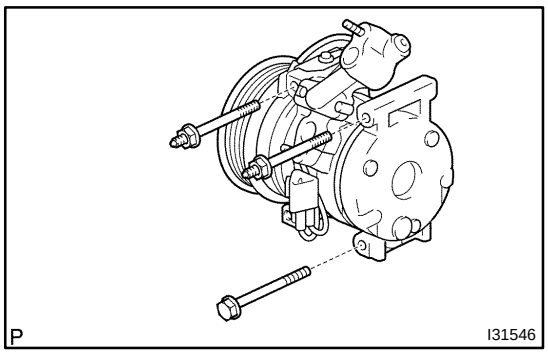

(c) Remove the 3 bolts and compressor and magnetic clutch.

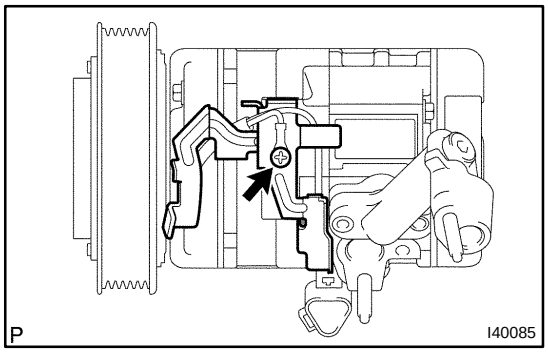

7. REMOVE COOLER COMPRESSOR BRACKET

(a) Remove the screw, earth wire and cooler compressor bracket.

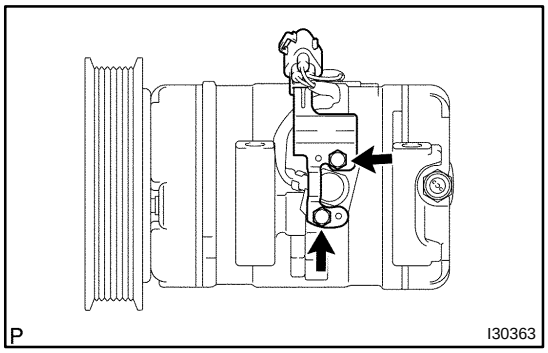

8. REMOVE MAGNET CLUTCH ASSY

(a) Remove the bolt and bracket.

(b) Place the compressor and magnetic clutch in vise.

NOTICE:

Do not get the bracket and harness caught in the vise.

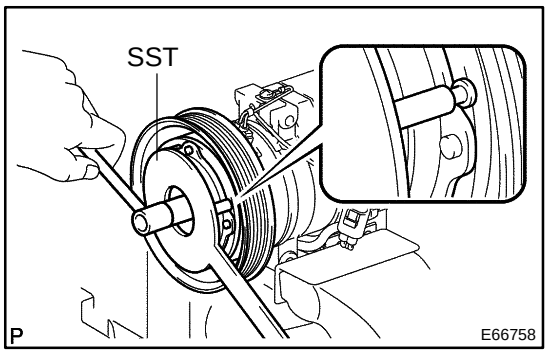

(c) Using SST, hold the magnet clutch hub.
SST 95047−10400

(d) Remove the bolt, magnet clutch hub and magnet clutch washer.

HINT:

There is no set number of magnet clutch washers since they are used for adjusting.

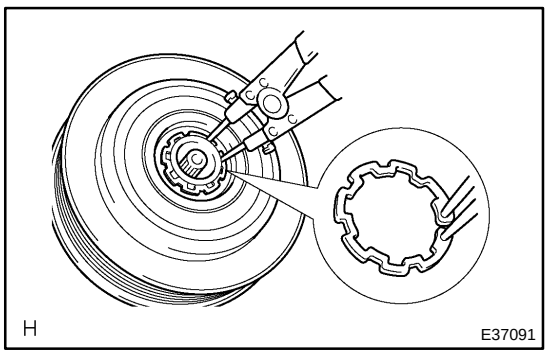

(e) Using a snap ring expander, remove the snap ring and magnet clutch rotor.

NOTICE:

Do not damage the seal cover of the bearing when removing the snap ring.

(f) Disconnect the connector.

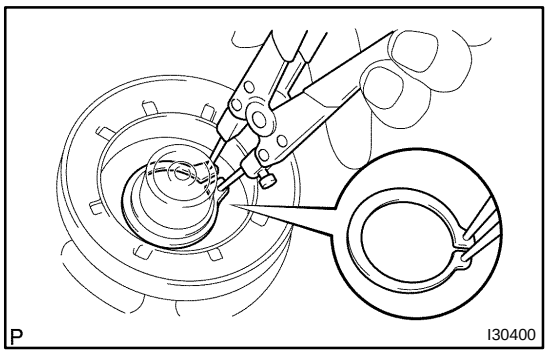

(g) Using a snap ring expander, remove the snap ring and magnet clutch stator.

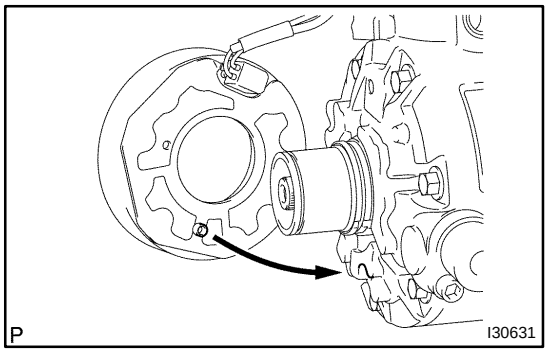

9. INSTALL MAGNET CLUTCH ASSY

(a) Fit the parts as shown in the illustration and install the magnet clutch stator.

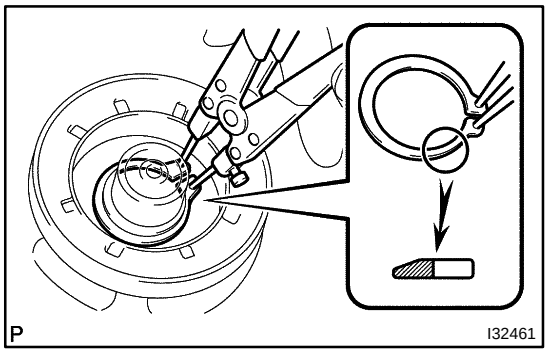

(b) Using a snap ring expander, install a new snap ring with the chamfered side facing up.

NOTICE:

Do not damage the seal cover of the bearing when removing the snap ring.

(c) Connect the connector.

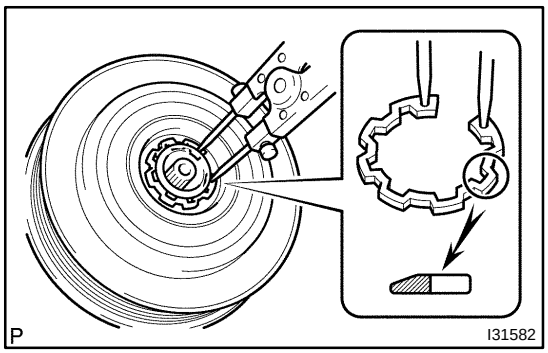

(d) Using a snap ring expander, install the magnet clutch rotor and a new snap ring with the chamfered side facing up.

NOTICE:

- **Do not expand the snap ring by more than 30.5 mm when installing it.**
- **Do not damage the seal cover of the bearing when removing the snap ring.**

(e) Install the magnet clutch washer and magnet clutch hub.

NOTICE:

Do not change the combination of the magnet clutch washers used before disassembly.

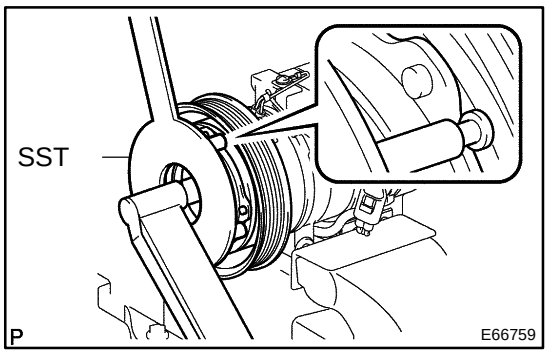

(f) Using SST, hold the magnet clutch hub and install the bolt.

SST 95047−10400

Torque: 18 N·m (184 kgf·cm, 13 ft·lbf)

NOTICE:

Make sure that there is no foreign matter or oil on the compressor shaft, bolt, and clutch hub.

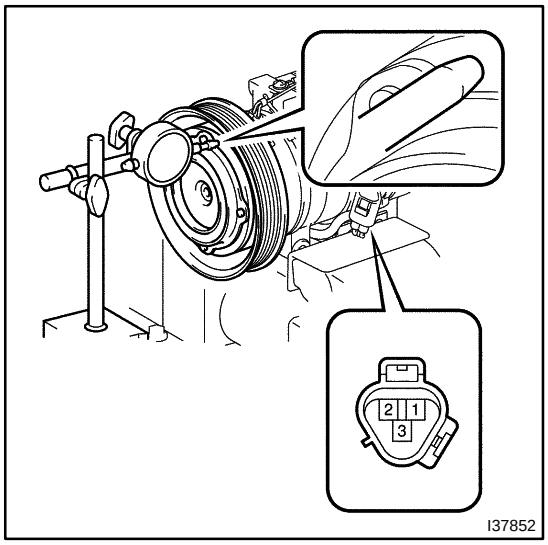

10. INSPECT MAGNETIC CLUTCH CLEARANCE

(a) Set the dial indicator to the magnet clutch hub.

(b) Connect the battery positive lead to the terminal 3 of magnet clutch connector and the negative lead to the earth wire. Turn on and off the magnet clutch and measure the clearance.

Standard clearance:

0.35 − 0.60 mm (0.014 − 0.024 in.)

If the measured value is out of the standard range, remove the magnet clutch hub and adjust it with magnet clutch washers.

NOTICE:

Adjustment shall be performed with 3 or less magnet clutch washers.

(c) Remove the compressor and magnetic clutch from the vise.

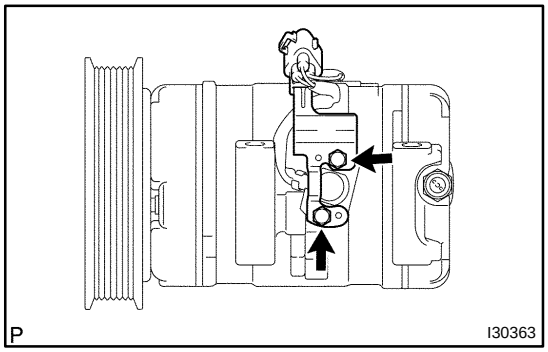

(d) Install the bolt and bracket.

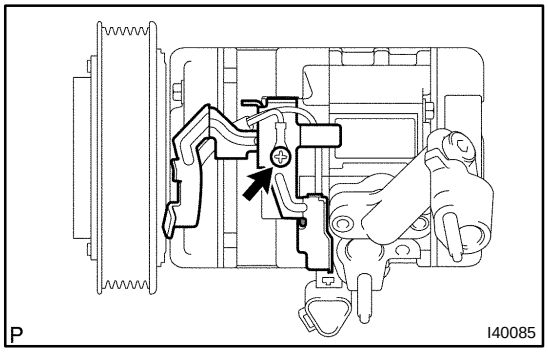

11. INSTALL COOLER COMPRESSOR BRACKET

(a) Install the earth wire and cooler compressor bracket with the screw.

12. INSPECT COMPRESSOR OIL

(a) When replacing the compressor and magnetic clutch with new one, after gradually removing the refrigerant gas from the service valve, drain the following amount of oil from the new compressor and magnetic clutch before installation.

Standard:

(Oil capacity inside new compressor and magnetic clutch: 120 + 15 cc (4.1 + 0.51 fl.oz.)) − (Remaining oil amount in the removed compressor and magnetic clutch) = (Oil amount to be removed when replacing)

NOTICE:

- **When checking the compressor oil level, observe the precautions on the cooler removal/installation.**
- **Because compressor oil remains in the pipes of the vehicle, if a new compressor and magnetic clutch is installed without removing some oil inside, the oil amount becomes too much, preventing heat exchange in the refrigerant cycle and causing refrigerant failure.**
- **If the remaining oil in the removed compressor and magnetic clutch is too small in volume, check for oil leakage.**
- **Be sure to use ND−OIL8 for compressor oil.**

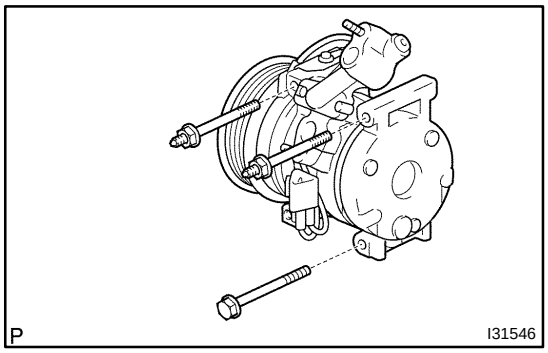

13. TEMPORARILY TIGHTEN COMPRESSOR AND MAGNETIC CLUTCH

(a) Temporarily tighten the compressor and magnetic clutch with the 3 bolts.

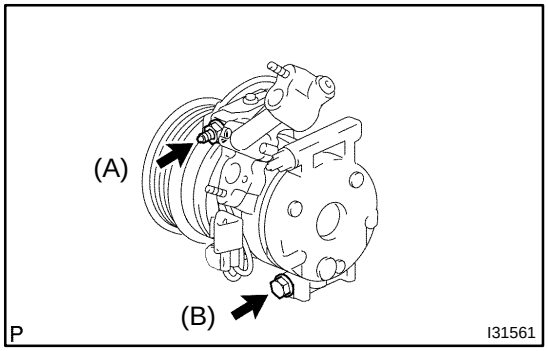

14. FULLY TIGHTEN COMPRESSOR AND MAGNETIC CLUTCH

(a) Tighten the compressor and magnetic clutch with the bolt (A) and bolt (B).

Torque: 25 N·m (250 kgf·cm, 18 ft·lbf)

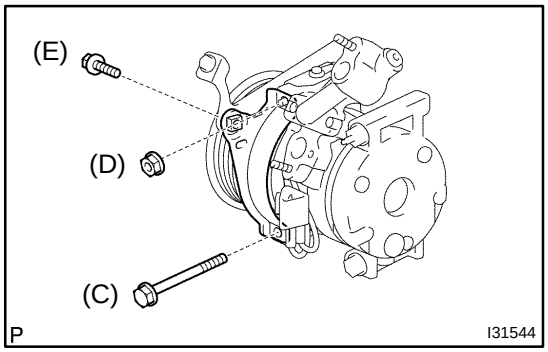

(b) Install the cooler compressor bracket with the 2 bolts and nut.

Torque:

25 N·m (250 kgf·cm, 18 ft·lbf) (Bolt (C))

25 N·m (250 kgf·cm, 18 ft·lbf) (Nut (D))

18 N·m (184 kgf·cm, 13 ft·lbf) (Bolt (E))

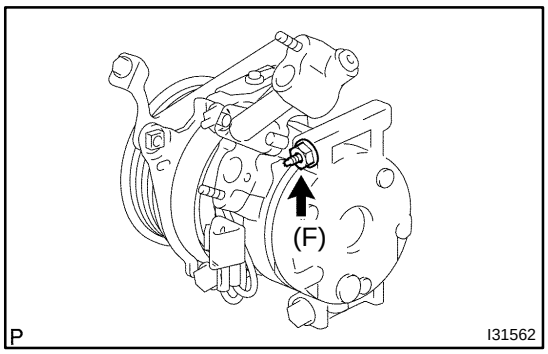

(c) Tighten the compressor and magnetic clutch with the bolt (F).
Torque: 25 N·m (250 kgf·cm, 18 ft·lbf)
(d) connect the connector.

15. INSTALL COOLER REFRIGERANT SUCTION HOSE NO.1

(a) Remove the attached vinyl tape from the hose.
(b) Sufficiently apply compressor oil to the new O−ring and fit surface of the compressor and magnetic clutch.
Compressor oil: ND−OIL8 or equivalent
(c) Install a O−ring to the cooler refrigerant suction hose No.1.

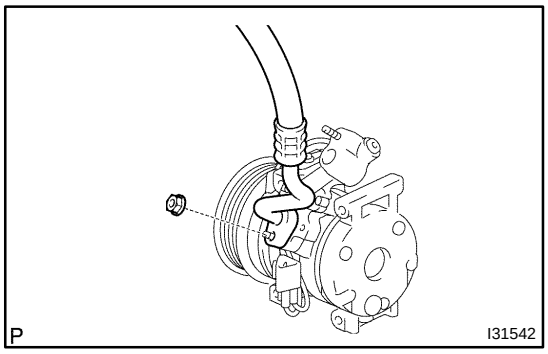

(d) Install the cooler refrigerant suction hose No.1 to the compressor and magnetic clutch with the nut.
Torque: 9.8 N·m (100 kgf·cm, 87 in.·lbf)

16. INSTALL COOLER REFRIGERANT DISCHARGE HOSE NO.1

(a) Remove the attached vinyl tape from the hose.
(b) Sufficiently apply compressor oil to the new O−ring and fit surface of the compressor and magnetic clutch.
Compressor oil: ND−OIL8 or equivalent
(c) Install a O−ring to the cooler refrigerant discharge hose No.1.

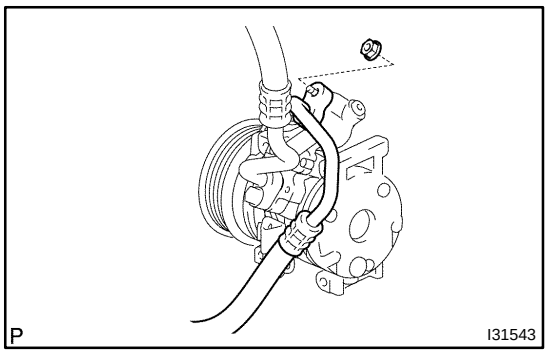

(d) Install the cooler refrigerant discharge hose No.1 to the compressor and magnetic clutch with the nut.
Torque: 9.8 N·m (100 kgf·cm, 87 in.·lbf)

17. INSTALL GENERATOR ASSY (See page 19−42)
18. INSTALL V (COOLER COMPRESSOR TO CRANKSHAFT PULLEY) BELT NO.1 (See page 55−26)
19. CHARGE REFRIGERANT (See page 55−22)
SST 07110−58060 (07117−58060, 07117−58070, 07117−58080, 07117−58090, 07117−78050, 07117−88060, 07117−88070, 07117−88080)
20. WARM UP ENGINE
21. INSPECT LEAKAGE OF REFRIGERANT (See page 55−22)

COOLER COMPRESSOR ASSY (1MZ−FE)

550C4−03

COMPONENTS

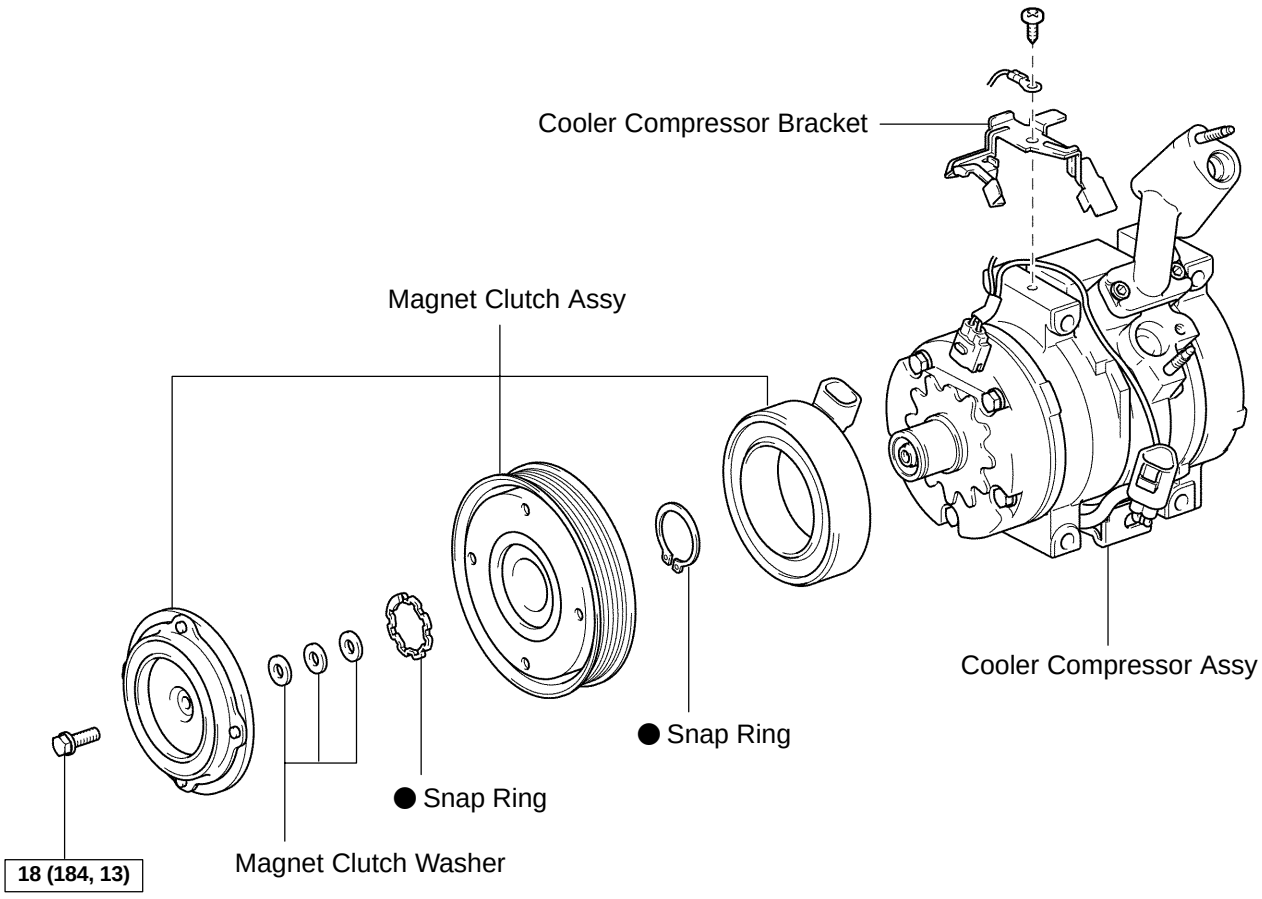

N·m (kgf·cm, ft·lbf) : Specified torque

● Non−reusable part

P

I31774

550C5−03

REPLACEMENT

HINT:

COMPONENTS: See page 55−60

1. DISCHARGE REFRIGERANT FROM REFRIGERATION SYSTEM (See page 55−22)

SST 07110−58060 (07117−58080, 07117−58090, 07117−78050, 07117−88060, 07117−88070, 07117−88080)

2. REMOVE V (COOLER COMPRESSOR TO CRANKSHAFT PULLEY) BELT NO.1 (See page 55−26)

3. REMOVE GENERATOR ASSY (See page 19−42)

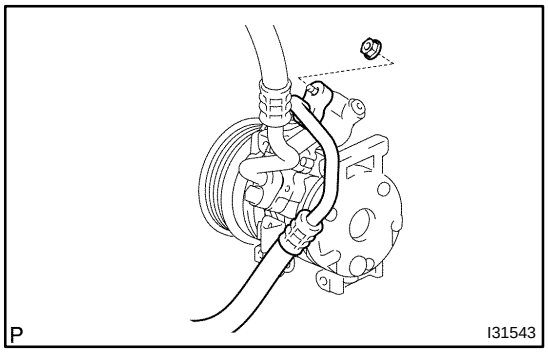

4. DISCONNECT COOLER REFRIGERANT DISCHARGE HOSE NO.1

(a) Remove the nut and disconnect the cooler refrigerant discharge hose No. 1.

(b) Remove the O−ring from the cooler refrigerant discharge hose No. 1.

NOTICE:

Seal the opening of the disconnected parts using vinyl tape to prevent moisture and foreign matter from entering.

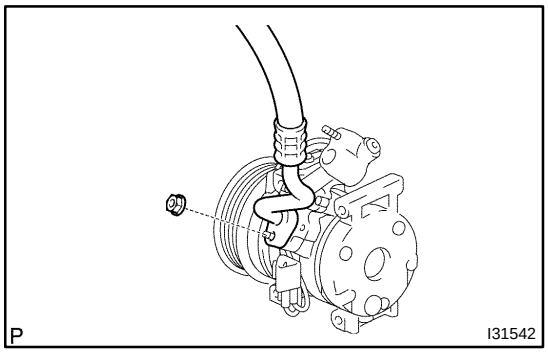

5. DISCONNECT COOLER REFRIGERANT SUCTION HOSE NO.1

(a) Remove the nut and disconnect the cooler refrigerant suction hose No. 1.

(b) Remove the O−ring from the cooler refrigerant suction hose No. 1.

NOTICE:

Seal the opening of the disconnected parts using vinyl tape to prevent moisture and foreign matter from entering.

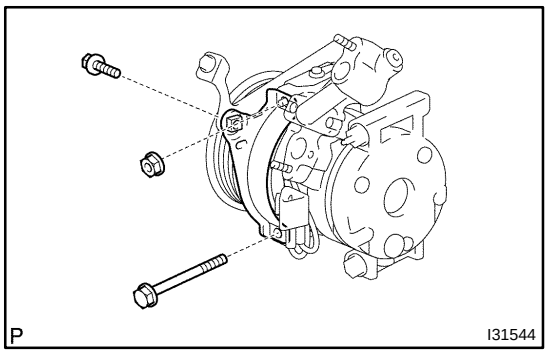

6. REMOVE COMPRESSOR AND MAGNETIC CLUTCH

(a) Disconnect the connector and clamp.

(b) Remove the 2 bolts, nut and cooler compressor bracket.

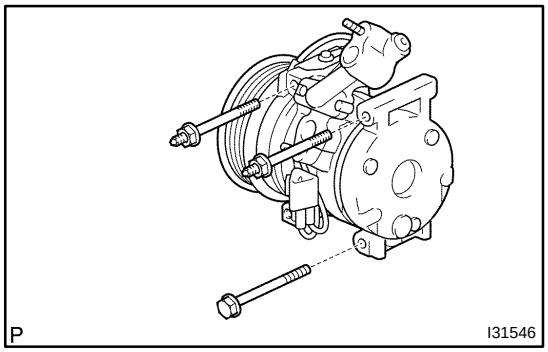

(c) Remove the 3 bolts and compressor and magnetic clutch.

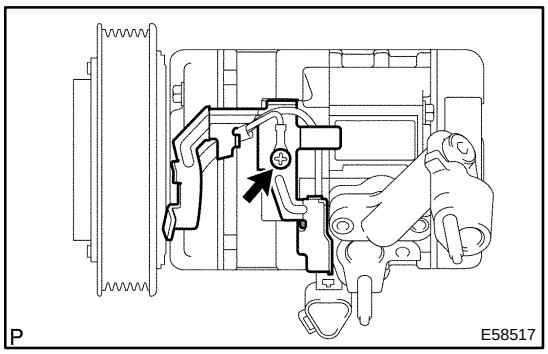

7. REMOVE COOLER COMPRESSOR BRACKET

(a) Remove the screw, earth wire and cooler compressor bracket.

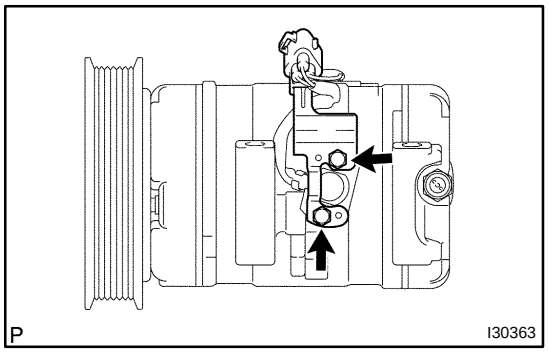

8. REMOVE MAGNET CLUTCH ASSY

(a) Remove the bolt and bracket.

(b) Place the compressor and magnetic clutch in vise.

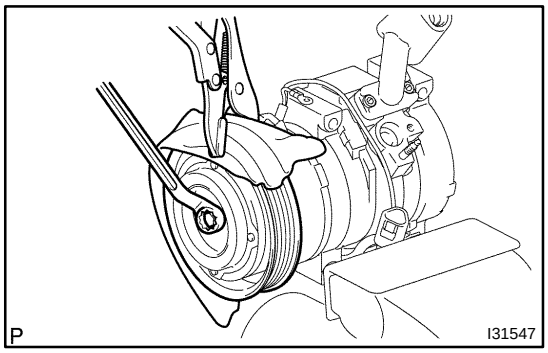

(c) Using a vise pliers, hold the magnet clutch hub.

(d) Remove the bolt, magnet clutch hub and magnet clutch washer.

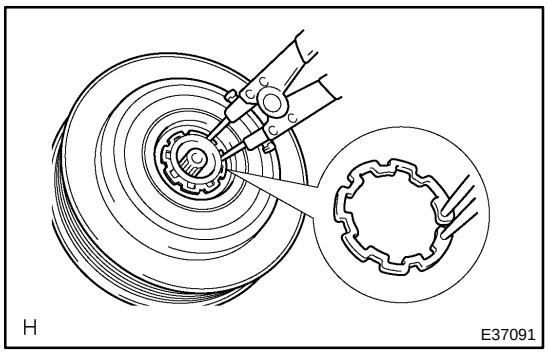

(e) Using a snap ring expander, remove the snap ring and magnet clutch rotor.

(f) Disconnect the connector.

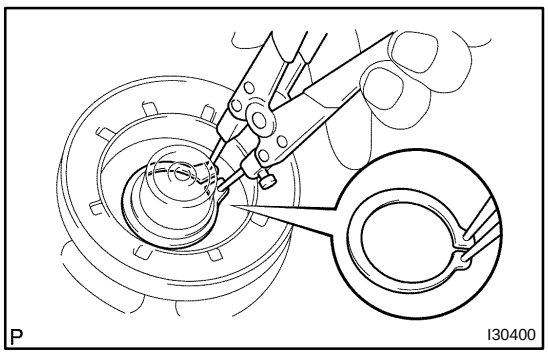

(g) Using a snap ring expander, remove the snap ring and magnet clutch starter.

9. REMOVE COOLER COMPRESSOR ASSY

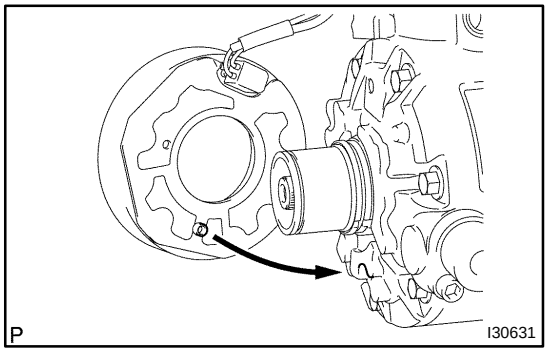

10. INSTALL MAGNET CLUTCH ASSY

(a) Matching the parts shown in the illustration, install the magnet clutch starter.

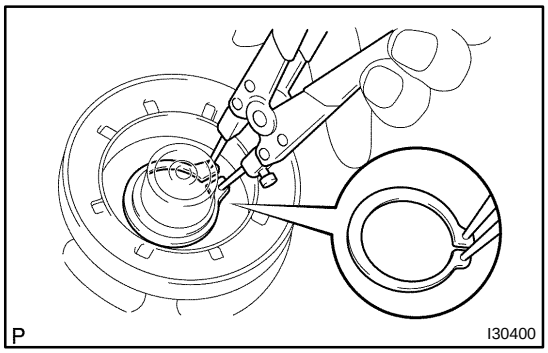

(b) Using a snap ring expander, install a new snap ring with the chamfered side facing up.

(c) Connect the connector.

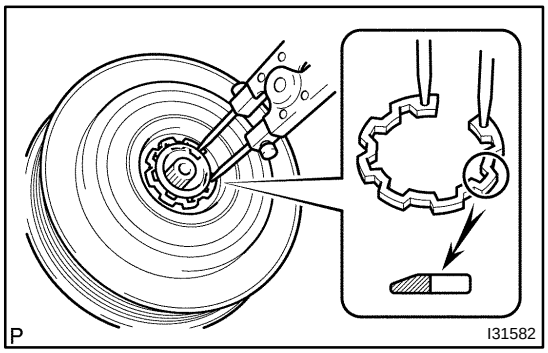

(d) Using a snap ring expander, install the magnet clutch rotor and a new snap ring with the chamfered side facing up.

(e) Install the magnet clutch washer and magnet clutch hub.

NOTICE:

Do not change the combination of the magnet clutch washers used before disassembly.

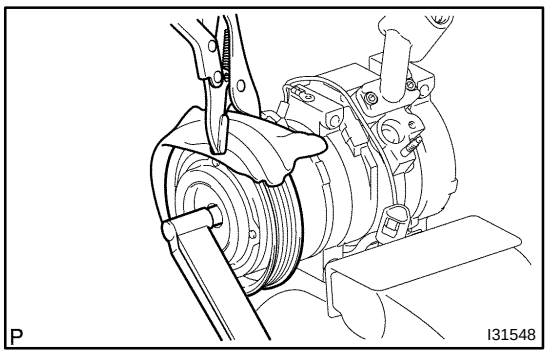

(f) Using a vise pliers, hold the magnet clutch hub and install the bolt.

Torque: 18 N·m (184 kgf·cm, 13 ft·lbf)

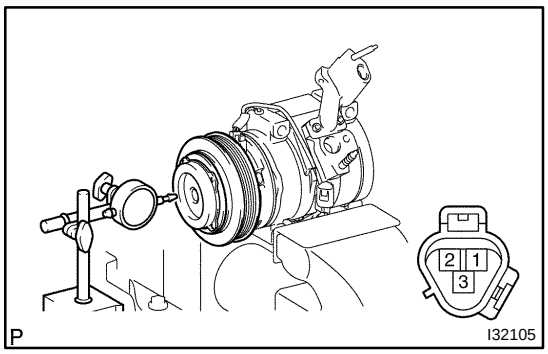

11. INSPECT MAGNETIC CLUTCH CLEARANCE

(a) Set the dial indicator to the magnet clutch hub.

(b) Connect the battery positive lead to the terminal 3 of magnet clutch connector and the negative lead to the earth wire. Turn on and off the magnet clutch and measure the clearance.

Standard clearance:

0.35 − 0.60 mm (0.014 − 0.024 in.)

If the measured value is out of the standard range, remove the magnet clutch hub and adjust it with magnet clutch washers.

NOTICE:

Adjustment shall be performed with 3 or less magnet clutch washers.

(c) Remove the compressor and magnetic clutch from the vise.

(d) Install the bolt and bracket.

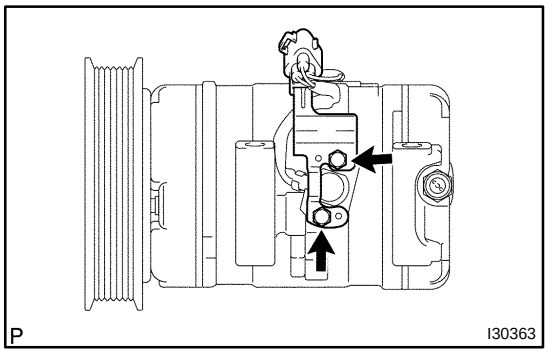

12. INSTALL COOLER COMPRESSOR BRACKET

(a) Install the earth wire and cooler compressor bracket with the screw.

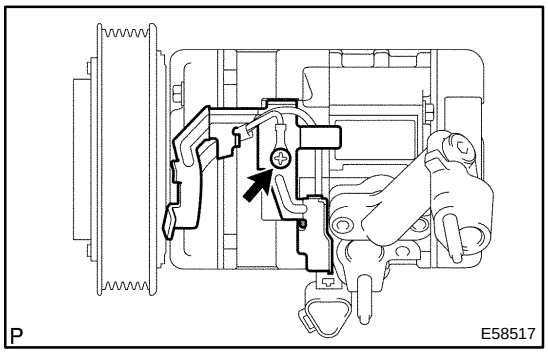

13. INSPECT COMPRESSOR OIL

(a) When replacing the compressor and magnetic clutch with new one, after gradually removing the refrigerant gas from the service valve, drain the following amount of oil from the new compressor and magnetic clutch before installation.

Standard:

(Oil capacity inside new compressor and magnetic clutch: 120 + 15 cc (4.1 +0.51 fl.oz.)) − (Remaining oil amount in the removed compressor and magnetic clutch) = (Oil amount to be removed when replacing)

NOTICE:

- **When checking the compressor oil level, observe the precautions on the cooler removal/installation.**
- **Because compressor oil remains in the pipes of the vehicle, if a new compressor and magnetic clutch is installed without removing some oil inside, the oil amount becomes too much, preventing heat exchange in the refrigerant cycle and causing refrigerant failure.**
- **If the remaining oil in the removed compressor and magnetic clutch is too small in volume, check for oil leakage.**
- **Be sure to use ND−OIL8 for compressor oil.**

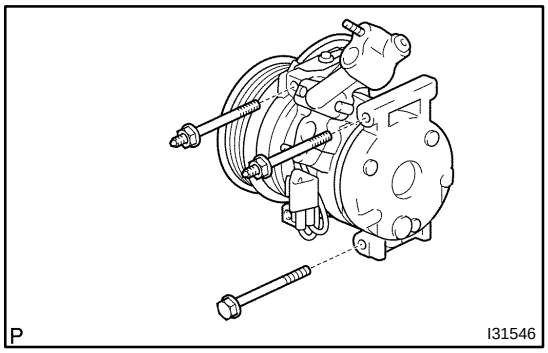

14. TEMPORARILY TIGHTEN COMPRESSOR AND MAGNETIC CLUTCH

(a) Temporarily the compressor and magnetic clutch with the 3 bolts.

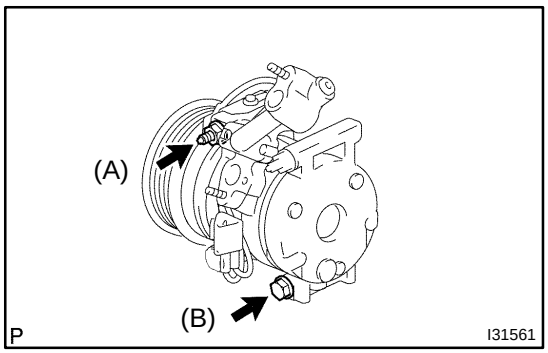

15. FULLY TIGHTEN COMPRESSOR AND MAGNETIC CLUTCH

(a) Tighten the compressor and magnetic clutch with the bolt (A) and bolt (B).

Torque: 25 N·m (250 kgf·cm, 18 ft·lbf)

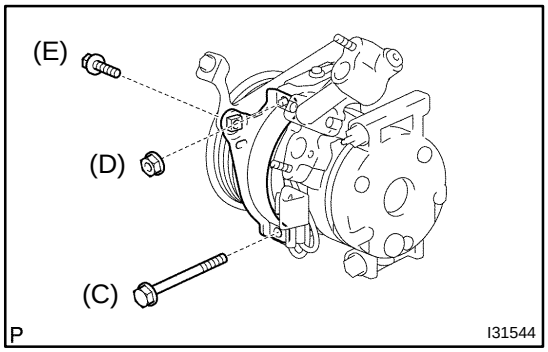

(b) Install the cooler compressor bracket with the 2 bolts and nut.

Torque:

25 N·m (250 kgf·cm, 18 ft·lbf) (Bolt (C))

25 N·m (250 kgf·cm, 18 ft·lbf) (Nut (D))

18 N·m (184 kgf·cm, 13 ft·lbf) (Bolt (E))

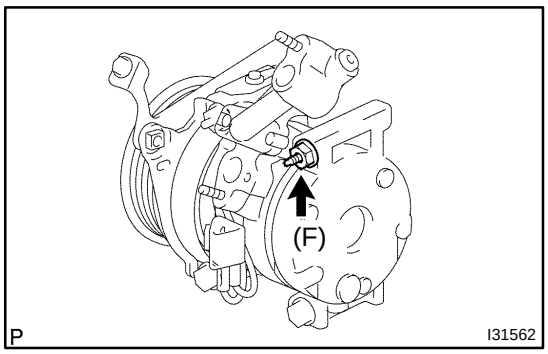

(c) Tighten the compressor and magnetic clutch with the bolt (F).
Torque: 25 N·m (250 kgf·cm, 18 ft·lbf)
(d) connect the connector.

16. INSTALL COOLER REFRIGERANT SUCTION HOSE NO.1

(a) Remove the attached vinyl tape from the hose.
(b) Sufficiently apply compressor oil to the new O−ring and fit surface of the compressor and magnetic clutch.
Compressor oil: ND−OIL 8 or equivalent
(c) Install a O−ring to the cooler refrigerant suction hose No. 1.

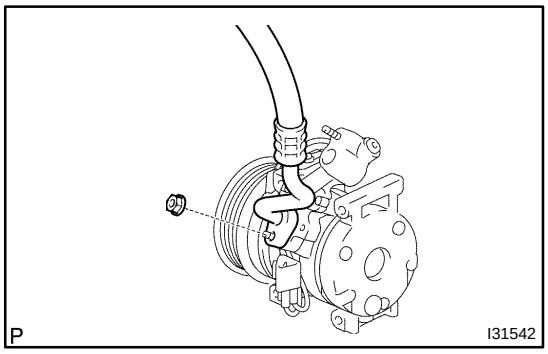

(d) Install the cooler refrigerant suction hose No. 1 to the compressor and magnetic clutch with the nut.
Torque: 9.8 N·m (100 kgf·cm,87 in.·lbf)

17. INSTALL COOLER REFRIGERANT DISCHARGE HOSE NO.1

(a) Remove the attached vinyl tape from the hose.
(b) Sufficiently apply compressor oil to the new O−ring and fit surface of the compressor and magnetic clutch.
Compressor oil: ND−OIL 8 or equivalent
(c) Install a O−ring to the cooler refrigerant discharge hose No.1.

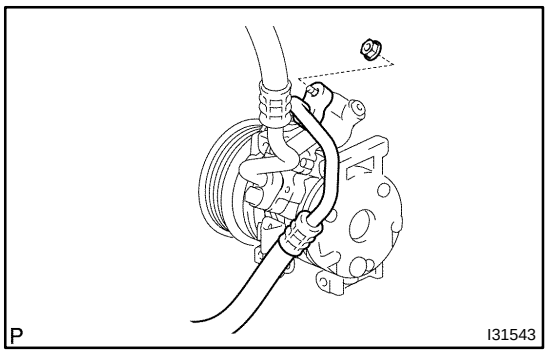

(d) Install the cooler refrigerant discharge hose No. 1 to the compressor and magnetic clutch with the nut.
Torque: 9.8 N·m (100 kgf·cm,87 in.·lbf)

18. INSTALL GENERATOR ASSY (See page 19−42)
19. INSTALL V (COOLER COMPRESSOR TO CRANKSHAFT PULLEY) BELT NO.1 (See page 55−26)
20. CHARGE REFRIGERANT (See page 55−22)
SST 07110−58060 (07117−58060, 07117−58070, 07117−58080, 07117−58090, 07117−78050, 07117−88060, 07117−88070, 07117−88080)
21. WARM UP ENGINE
22. INSPECT LEAKAGE OF REFRIGERANT (See page 55−22)

COOLER COMPRESSOR ASSY (2AZ−FE)

COMPONENTS

550C6−03

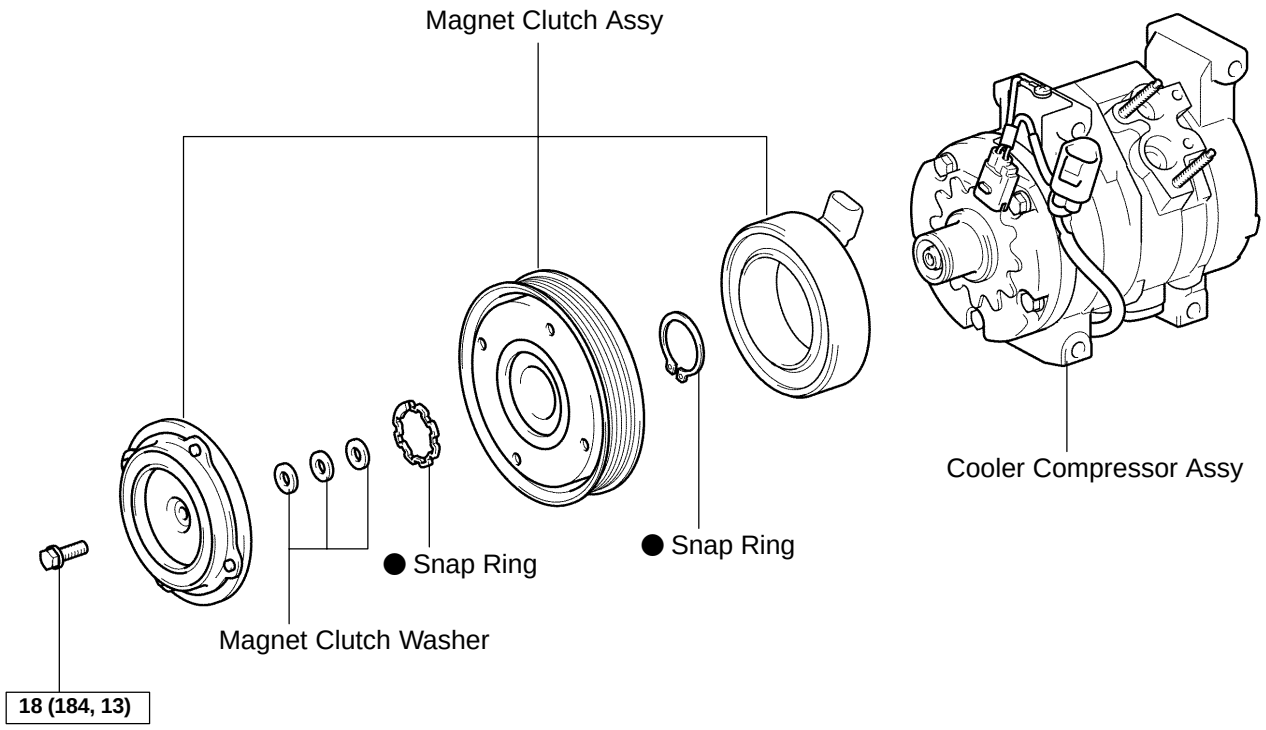

N·m (kgf·cm, ft·lbf) : Specified torque

● Non−reusable part

P

I31629

550C7−03

REPLACEMENT

HINT:

COMPONENTS: See page 55−67

1. DISCHARGE REFRIGERANT FROM REFRIGERATION SYSTEM (See page 55−22)

SST 07110−58060 (07117−58080, 07117−58090, 07117−78050, 07117−88060, 07117−88070, 07117−88080)

2. REMOVE FAN AND GENERATOR V BELT (See page 14−5)

SST 09249−63010

3. REMOVE GENERATOR ASSY (See page 19−17)

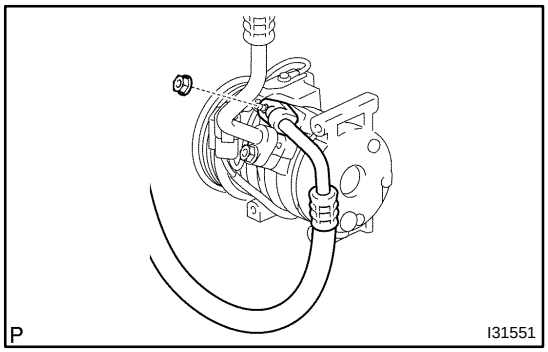

4. DISCONNECT COOLER REFRIGERANT DISCHARGE HOSE NO.1

(a) Remove the nut and disconnect the cooler refrigerant discharge hose No. 1.

(b) Remove the O−ring from the cooler refrigerant discharge hose No. 1.

NOTICE:

Seal the opening of the disconnected parts using vinyl tape to prevent moisture and foreign matter from entering.

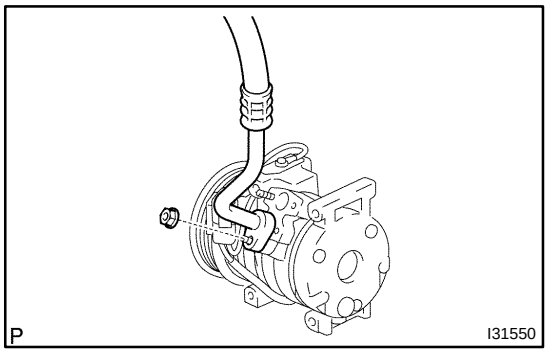

5. DISCONNECT COOLER REFRIGERANT SUCTION HOSE NO.1

(a) Remove the nut and disconnect the cooler refrigerant suction hose No. 1.

(b) Remove the O−ring from the cooler refrigerant suction hose No. 1.

NOTICE:

Seal the opening of the disconnected parts using vinyl tape to prevent moisture and foreign matter from entering.

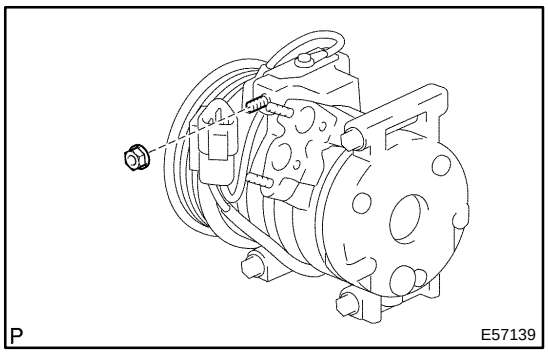

6. REMOVE COMPRESSOR AND MAGNETIC CLUTCH

(a) Disconnect the connector.

(b) Remove the nut.

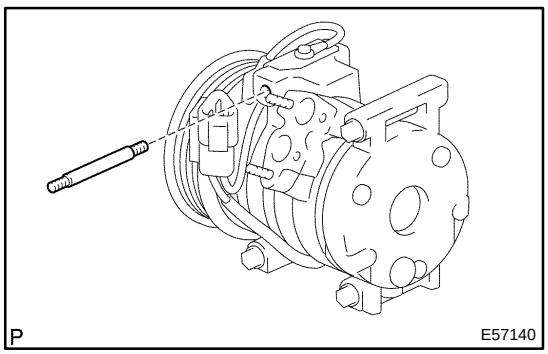

(c) Using a torque socket wrench (E8), remove the bolt.

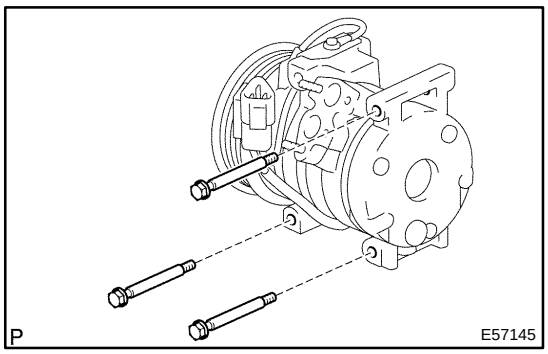

(d) Remove the 3 bolts and compressor and magnetic clutch.

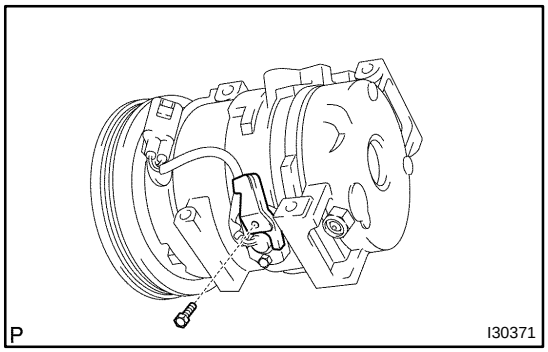

7. REMOVE MAGNET CLUTCH ASSY

(a) Remove the bolt and bracket.

(b) Place the compressor and magnetic clutch in vise.

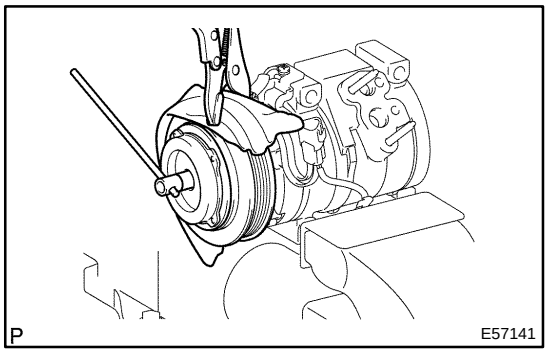

(c) Using a vise pliers, hold the magnet clutch hub.

(d) Remove the bolt, magnet clutch hub and magnet clutch washer.

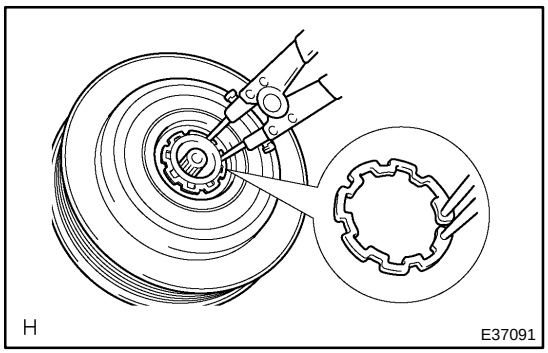

(e) Using a snap ring expander, remove the snap ring and magnet clutch rotor.

(f) Disconnect the connector.

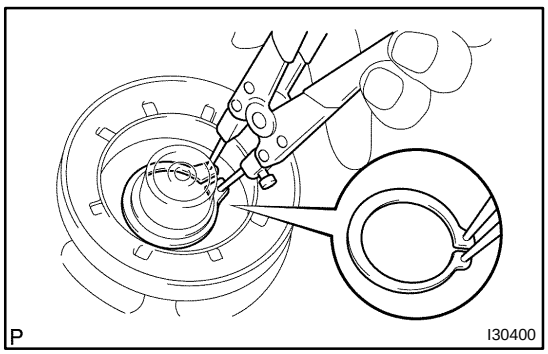

(g) Using a snap ring expander, remove the snap ring and magnet clutch starter.

8. REMOVE COOLER COMPRESSOR ASSY

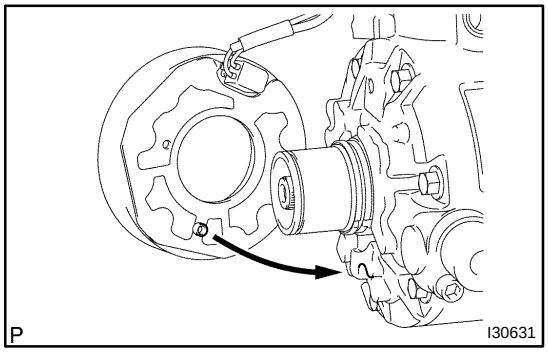

9. INSTALL MAGNET CLUTCH ASSY

(a) Matching the parts shown in the illustration, install the magnet clutch starter.

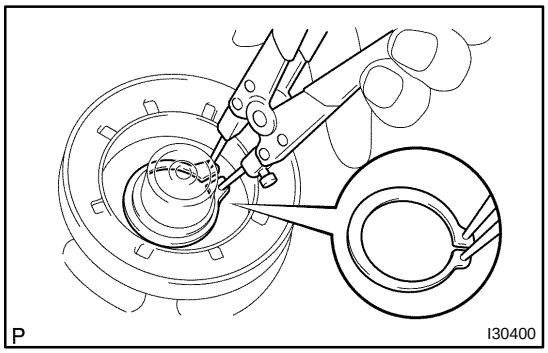

(b) Using a snap ring expander, install a new snap ring with the chamfered side facing up.

(c) Connect the connector.

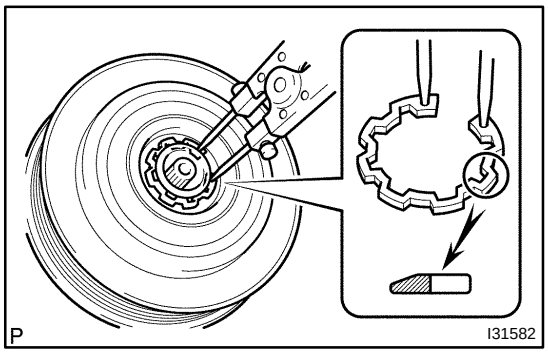

(d) Using a snap ring expander, install the magnet clutch rotor and a new snap ring with the chamfered side facing up.

(e) Install the magnet clutch washer and magnet clutch hub.

NOTICE:

Do not change the combination of the magnet clutch washers used before disassembly.

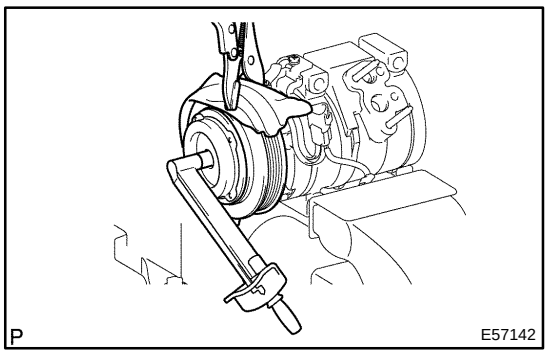

(f) Using a vise pliers, hold the magnet clutch hub and install the bolt.

Torque: 18 N·m (184 kgf·cm, 13 ft·lbf)

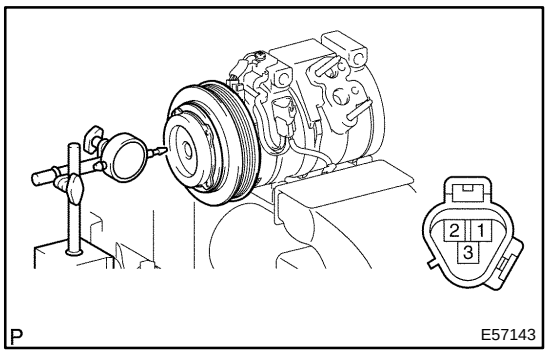

10. INSPECT MAGNETIC CLUTCH CLEARANCE

(a) Set the dial indicator to the magnet clutch hub.

(b) Connect the battery positive lead to the terminal 3 of magnet clutch connector and the negative lead to the earth wire. Turn on and off the magnet clutch and measure the clearance.

Standard clearance:

0.35 − 0.60 mm (0.014 − 0.024 in.)

If the measured value is out of the standard range, remove the magnet clutch hub and adjust it with magnet clutch washers.

NOTICE:

Adjustment shall be performed with 3 or less magnet clutch washers.

(c) Remove the compressor and magnetic clutch from the vise.

(d) Install the bolt and bracket.

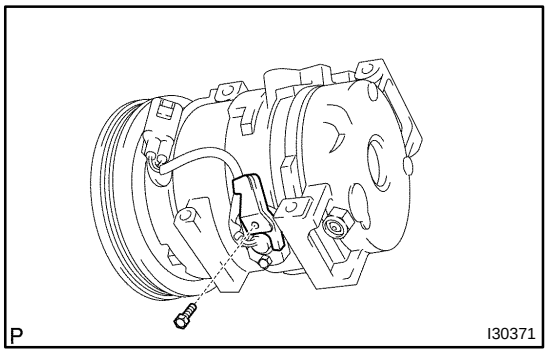

11. INSPECT COMPRESSOR OIL

(a) When replacing the compressor and magnetic clutch with new one, after gradually removing the refrigerant gas from the service valve, drain the following amount of oil from the new compressor and magnetic clutch before installation.

Standard:

(Oil capacity inside new compressor and magnetic clutch: 120 + 15 cc (4.1 + 0.51 fl.oz.)) − (Remaining oil amount in the removed compressor and magnetic clutch) = (Oil amount to be removed when replacing)

NOTICE:

- **When checking the compressor oil level, observe the precautions on the cooler removal/installation.**
- **Because compressor oil remains in the pipes of the vehicle, if a new compressor and magnetic clutch is installed without removing some oil inside, the oil amount becomes too much, preventing heat exchange in the refrigerant cycle and causing refrigerant failure.**
- **If the remaining oil in the removed compressor and magnetic clutch is too small in volume, check for oil leakage.**
- **Be sure to use ND−OIL8 for compressor oil.**

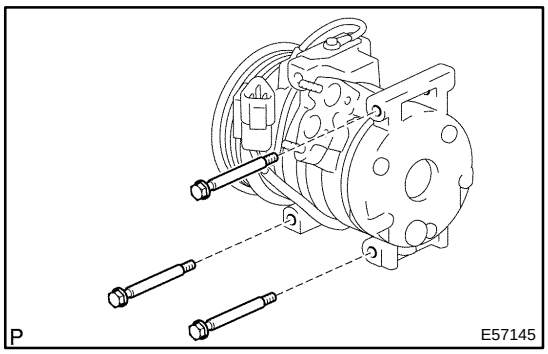

12. TEMPORARILY TIGHTEN COMPRESSOR AND MAGNETIC CLUTCH

(a) Temporarily the compressor and magnetic clutch with the 3 bolts.

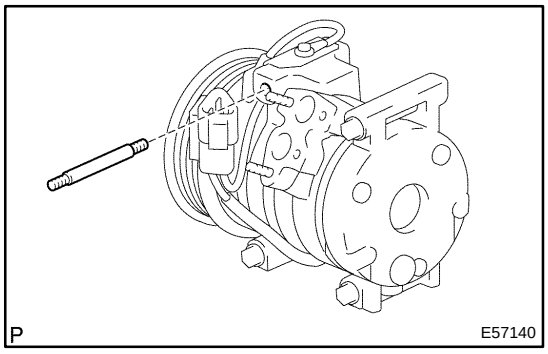

13. FULLY TIGHTEN COMPRESSOR AND MAGNETIC CLUTCH

(a) Using a torque socket wrench (E8), install the bolt.
Torque: 25 N·m (250 kgf·cm, 18 ft·lbf)

(b) Tighten the compressor and magnetic clutch with the 3 bolts and nut.
Torque: 25 N·m (250 kgf·cm, 18 ft·lbf)

(c) Connect the connector.

NOTICE:
Tighten the bolts and nuts in following order shown in the illustration to install the compressor magnetic clutch.

14. INSTALL COOLER REFRIGERANT SUCTION HOSE NO.1

(a) Remove the attached vinyl tape from the hose.

(b) Sufficiently apply compressor oil to the new O−ring and fit surface of the compressor and magnetic clutch.
Compressor oil: ND−OIL 8 or equivalent

(c) Install a O−ring to the cooler refrigerant suction hose No. 1.

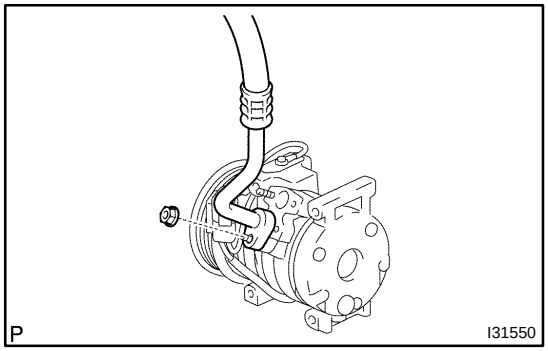

(d) Install the cooler refrigerant suction hose No. 1 to the compressor and magnetic clutch with the nut .
Torque: 9.8 N·m (100 kgf·cm, 87 in.·lbf)

15. INSTALL COOLER REFRIGERANT DISCHARGE HOSE NO.1

(a) Remove the attached vinyl tape from the hose.

(b) Sufficiently apply compressor oil to the new O−ring and fit surface of the compressor and magnetic clutch.
Compressor oil: ND−OIL 8 or equivalent

(c) Install a O−ring to the cooler refrigerant discharge hose No. 1.

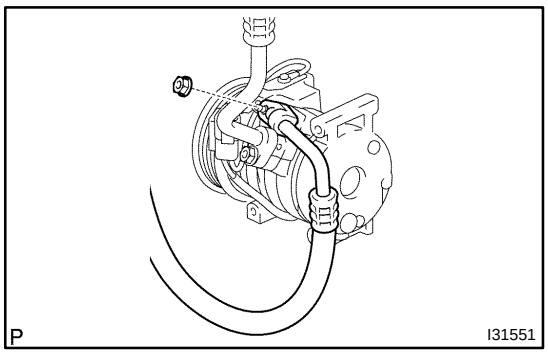

(d) Install the cooler refrigerant discharge hose No. 1 to the compressor and magnetic clutch with the nut.
Torque: 9.8 N·m (100 kgf·cm, 87 in.·lbf)

16. INSTALL GENERATOR ASSY (See page 19−17)

17. INSTALL FAN AND GENERATOR V BELT (See page 14−5)
SST 09249−63010

18. CHARGE REFRIGERANT (See page 55−22)
SST 07110−58060 (07117−58060, 07117−58070, 07117−58080, 07117−58090, 07117−78050, 07117−88060, 07117−88070, 07117−88080)
Specified amount: 550 ± 50 g (19.37 ± 1.76 oz.)

19. WARM UP ENGINE

20. INSPECT LEAKAGE OF REFRIGERANT (See page 55−22)

COOLER CONDENSER ASSY

550C8−03

ON−VEHICLE INSPECTION

1. INSPECT COOLER CONDENSER ASSY

(a) If a fin of the cooler condenser assy is dirty, clean it with water and dry it with compressor air.

NOTICE:

Do not damage the fin of the condenser assy.

(b) If a fin of the condenser assy is bent, make it straight using a screwdriver or pliers.

2. INSPECT CONDENSER FOR LEAKAGE OF REFRIGERANT

(a) Using a halogen leak detector, check pipe joints for gas leakage.

(b) If gas leakage is detected in a joint, check the torque of the joint.

550C9−03

COMPONENTS

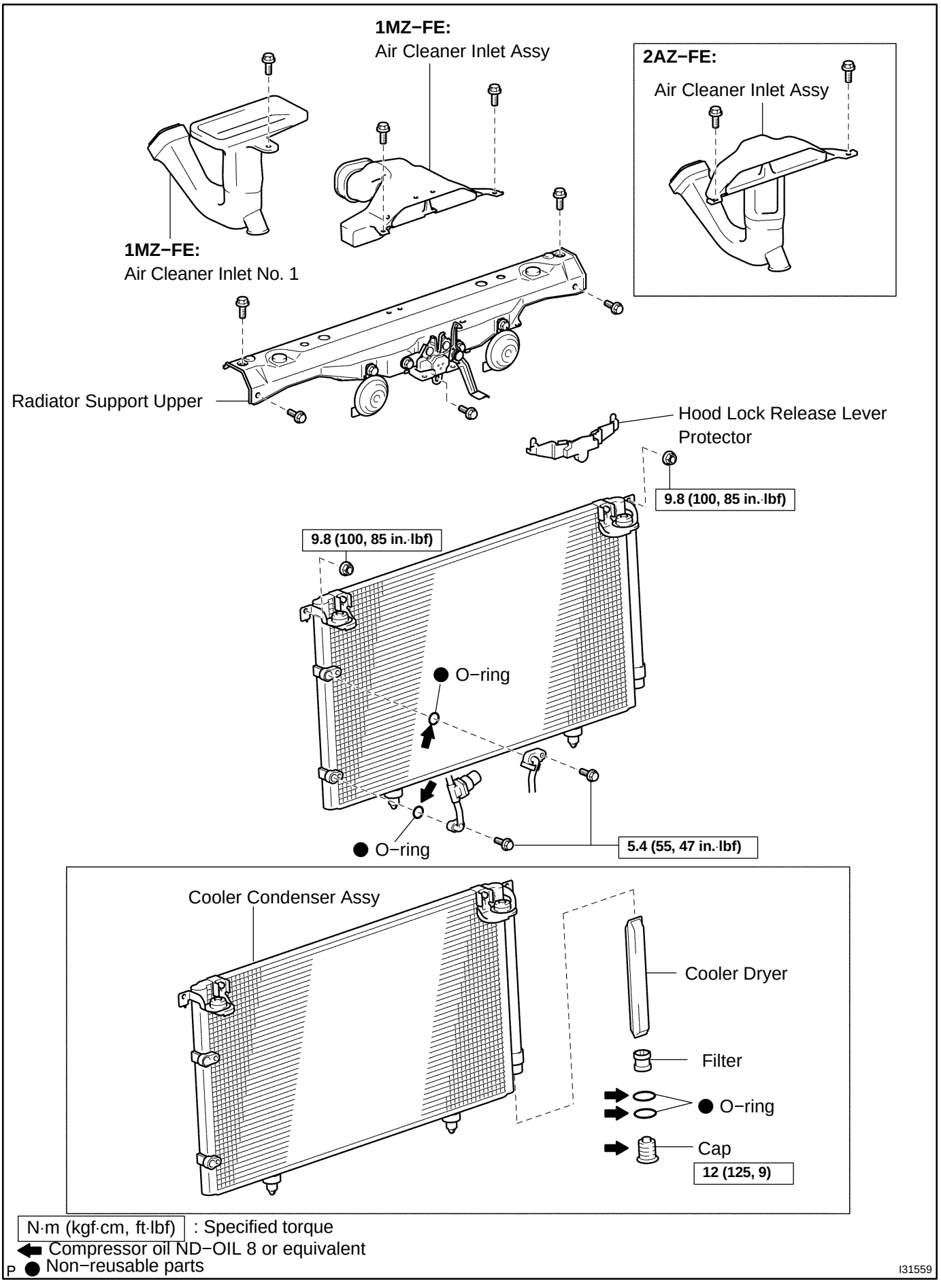

N·m (kgf·cm, ft·lbf) : Specified torque
⬅ Compressor oil ND−OIL 8 or equivalent
P ● Non−reusable parts

I31559

550CA−04

OVERHAUL

HINT:

COMPONENTS: See page 55−75

1. DISCHARGE REFRIGERANT FROM REFRIGERATION SYSTEM (See page 55−22)

SST 07110−58060 (07117−58080, 07117−58090, 07117−78050, 07117−88060, 07117−88070, 07117−88080)

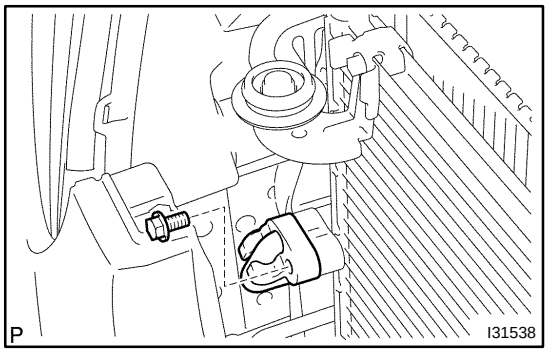

2. REMOVE COOLER REFRIGERANT DISCHARGE HOSE NO.1

(a) Remove the bolt and disconnect the cooler refrigerant discharge hose No. 1 from the cooler condenser assy.

(b) Remove the O−ring from the cooler refrigerant discharge hose No. 1.

NOTICE:

Seat the opening of the disconnected parts using vinyl tape to prevent moisture and foreign matter from entering.

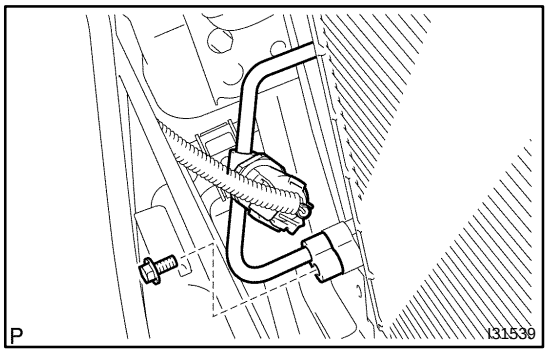

3. DISCONNECT COOLER REFRIGERANT LIQUID PIPE A

(a) Remove the bolt and disconnect the cooler refrigerant liquid pipe A from the cooler condenser assy.

(b) Remove the O−ring from the cooler refrigerant liquid pipe A.

NOTICE:

Seal the opening of the disconnected parts using vinyl tape to prevent moisture and foreign matter from entering.

4. REMOVE AIR CLEANER INLET ASSY

3MZ−FE: (See page 16−36)
1MZ−FE: (See page 16−36)
2AZ−FE: (See page 16−15)

5. REMOVE RADIATOR SUPPORT UPPER

3MZ−FE: (See page 16−36)
1MZ−FE: (See page 16−36)
2AZ−FE: (See page 16−15)

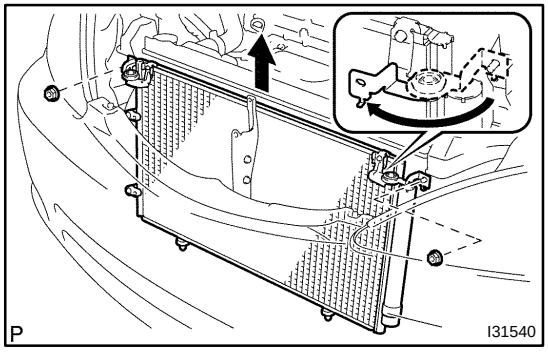

6. REMOVE COOLER CONDENSER ASSY

(a) Remove the 2 nuts and cooler condenser assy.

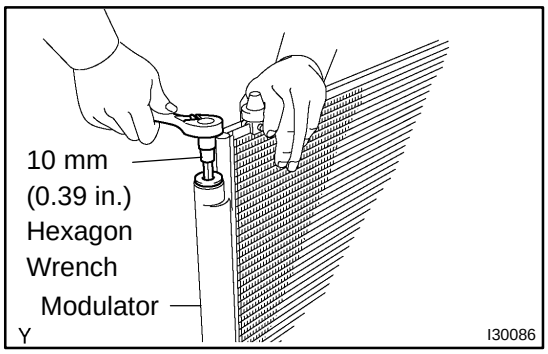

7. REMOVE COOLER DRYER

(a) Using hexagon wrench 10 mm (0.39 in.), remove the cap and filter from the modulator.

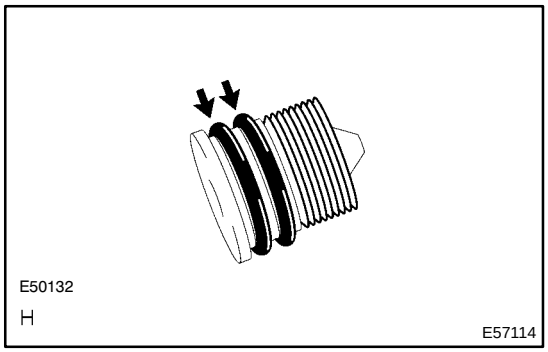

(b) Remove the 2 O−rings from the cap.

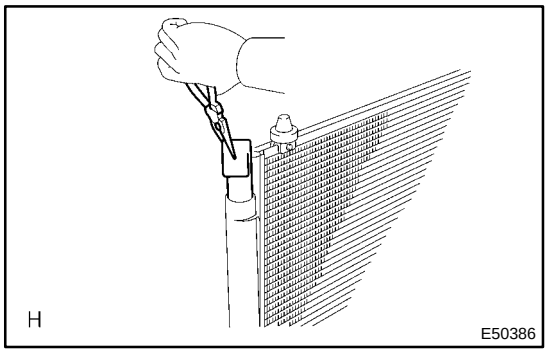

(c) Using a needle nose pliers, remove the cooler dryer.
SST 99999−60018

8. INSTALL COOLER DRYER

(a) Using a needle nose pliers, install the cooler dryer.

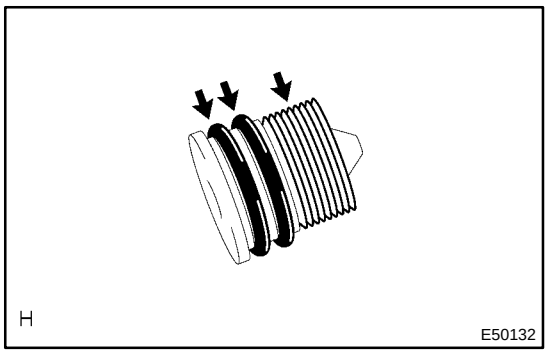

(b) Install 2 new O−rings to the cap.

(c) Sufficiently apply compressor oil to the fit surfaces of the O−ring and the cap.
Compressor oil: ND−OIL 8 or equivalent

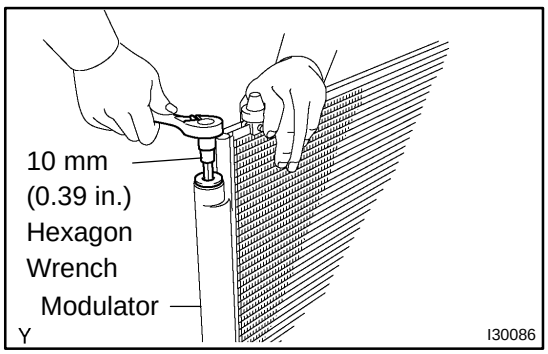

(d) Using hexagon wrench 10 mm (0.39 in.), install the cap to the cooler condenser assy.
Torque: 12 N·m (125 kgf·cm, 9 ft·lbf)
SST 99999−60018

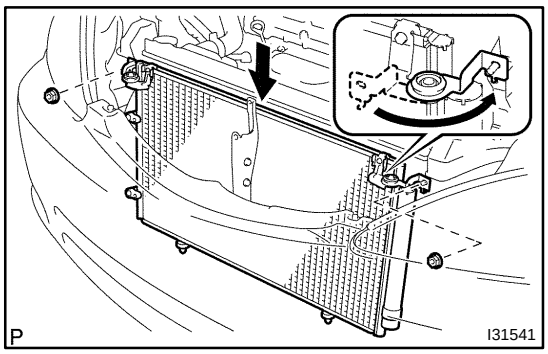

9. INSTALL COOLER CONDENSER ASSY

(a) Install the cooler condenser assy with the 2 nuts.
Torque: 9.8 N·m (100 kgf·cm, 85 in.·lbf)

10. INSTALL RADIATOR SUPPORT UPPER
3MZ−FE: (See page 16−36)
1MZ−FE: (See page 16−36)
2AZ−FE: (See page 16−15)

11. INSTALL COOLER REFRIGERANT LIQUID PIPE A

(a) Remove the attached vinyl tape from the tube and connecting part of the cooler condenser assy.

(b) Sufficiently apply compressor oil to the new O−ring and pipe joint.
Compressor oil: ND−OIL 8 or equivalent

(c) Install a O−ring to the cooler refrigerant liquid pipe A.

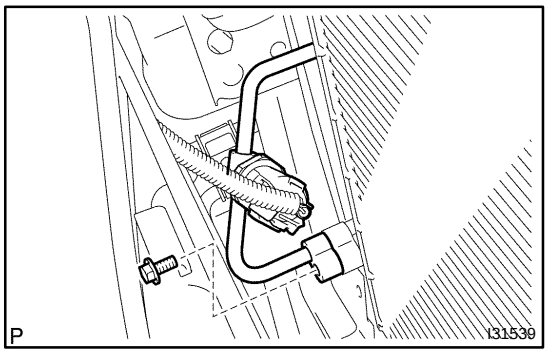

(d) Connect the cooler refrigerant liquid pipe A to the cooler condenser assy with the bolt.
Torque: 5.4 N·m (55 kgf·cm, 47 in.·lbf)

12. INSTALL COOLER REFRIGERANT DISCHARGE HOSE NO.1

(a) Remove the attached vinyl tape from the tube and connecting part of the cooler condenser assy.

(b) Sufficiently apply compressor oil to the new O−ring and hose joint.
Compressor oil: ND−OIL 8 or equivalent

(c) Install a O−ring to the cooler refrigerant discharge hose No. 1.

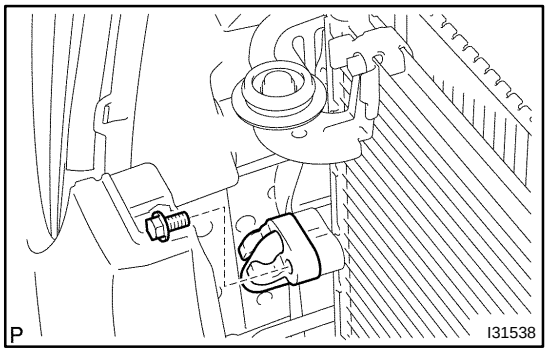

(d) Connect the cooler refrigerant discharge hose No. 1 to the cooler condenser assy with the bolt.
Torque: 5.4 N·m (55 kgf·cm, 47 in.·lbf)

13. CHARGE REFRIGERANT (See page 55−22)

SST 07110−58060 (07117−58060, 07117−58070, 07117−58080, 07117−58090, 07117−78050, 07117−88060, 07117−88070, 07117−88080)

Specified amount: 550 ± 50 g (19.37 ± 1.76 oz.)

14. WARM UP ENGINE

15. INSPECT LEAKAGE OF REFRIGERANT (See page 55−22)

SUPPLEMENTAL RESTRAINT SYSTEM

600Y2−01

PRECAUTION

CAUTION:

- **The vehicle is equipped with SRS, which consists of a driver airbag, front passenger airbag, side airbag and curtain shield airbag. Failure to carry out service operations in the correct sequence could cause the SRS to unexpectedly deploy during servicing, possibly leading to a serious accident. Further, if a mistake is made in servicing the SRS, it is possible that the SRS may fail to operate when required. Before performing servicing (including removal or installation of parts, inspection or replacement), be sure to read the following items carefully, then follow the correct procedures indicated in the repair manual.**
- **Wait at least 90 seconds after the ignition switch is turned to the ”LOCK” position and the negative (−) terminal cable is disconnected from the battery before starting the operation.**
  (The SRS is equipped with a back−up power source, so that if work is started within 90 seconds after disconnecting the negative (−) terminal cable of the battery, the SRS may be deployed.)
- **Do not expose the horn button assy, front passenger airbag assy, airbag sensor assy center, airbag sensor front, front seat airbag assy, side airbag sensor assy, curtain shield airbag assy, airbag sensor rear or seat position airbag sensor directly to hot air or flames.**
- **Be sure to perform the initialization of the occupant classification ECU under the conditions listed below (See page 05−1452). If the initialization is not performed, the SRS may not operate properly.**
  - **The occupant classification ECU is replaced.**
  - **Accessories (seatback tray or seat cover, etc.) are installed to the vehicle.**
  - **The passenger seat is removed from the vehicle.**
  - **Both the SRS warning light and passenger airbag ON/OFF indicator light (”OFF”) come on.**
  - **The vehicle is brought to the workshop for repair purpose due to an accident or collision.**

NOTICE:

- **Malfunction symptoms of the SRS are difficult to confirm, so DTCs are the most important source of information when troubleshooting. When troubleshooting the SRS, always inspect DTCs before disconnecting the battery.**
- **Even in the case of a minor collision when the SRS does not deploy, the horn button assy, front passenger airbag assy, airbag sensor assy center, airbag sensor front, front seat airbag assy, side airbag sensor assy, curtain shield airbag assy, airbag sensor rear and seat position airbag sensor should be inspected (see page 60−17).**
- **Before repair work, remove the airbag sensor if any kind of shock is likely to occur to the airbag sensor during the operation.**
- **Never use SRS parts from another vehicle. When replacing the parts, replace them with new ones.**
- **Never disassemble or repair the horn button assy, front passenger airbag assy, airbag sensor assy center, airbag sensor front, front seat airbag assy, side airbag sensor assy, curtain shield airbag assy, airbag sensor rear or seat position airbag sensor in order to reuse it.**
- **If the horn button assy, front passenger airbag assy, airbag sensor assy center, airbag sensor front, front seat airbag assy, side airbag sensor assy, curtain shield airbag assy, airbag sensor rear or seat position airbag sensor has been dropped, or if there are any cracks, dents or other defects in the case, bracket or connector, replace it with a new one.**
- **Use a volt/ohmmeter with high impedance (10 kΩ/V minimum) for troubleshooting the electrical circuits.**

- **Information labels are attached to the periphery of the SRS components. Follow the instructions in the caution.**
- **After work on the SRS is completed, perform the SRS warning light check (See page 05−1456).**
- **When the negative (−) terminal cable is disconnected from the battery, the memory will be cleared. Because of this, be sure to make a record of the contents memorized in each system before starting work. When work is finished, adjust each system as it was before. Never use a back−up power supply from outside the vehicle to avoid erasing the memory in any system.**
- **If the vehicle is equipped with a mobile communication system, see page 01−5.**

1. DEPLOYMENT CONDITION

(a) When the vehicle collides and the shock is greater than the specified value, the SRS is activated automatically. The airbag sensor assy center includes the safing sensor and deceleration sensor. The safing sensor was designed to be turned on at a smaller deceleration rate than the deceleration sensor. The deceleration sensor determines whether or not ignition is necessary based on signals from the airbag sensor front. Current flows to the squibs to deploy the SRS when the conditions shown in the illustrations below are met.

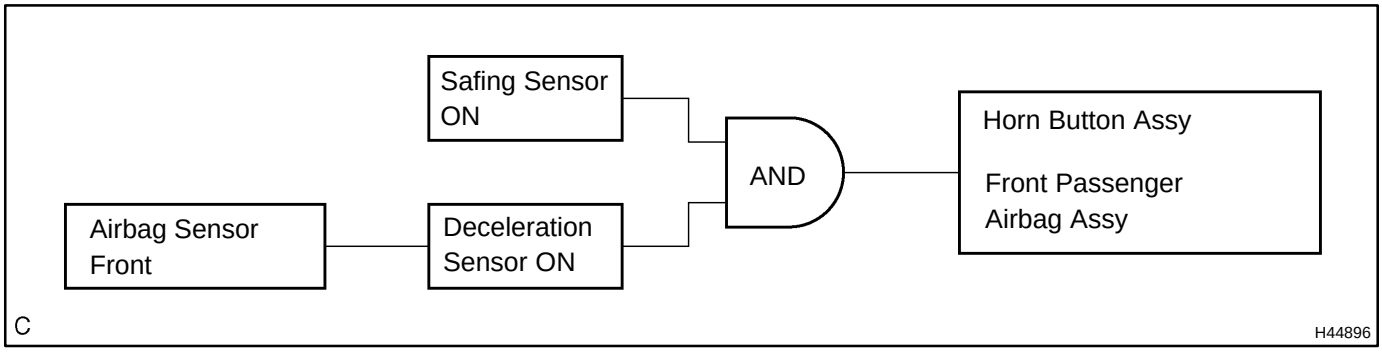

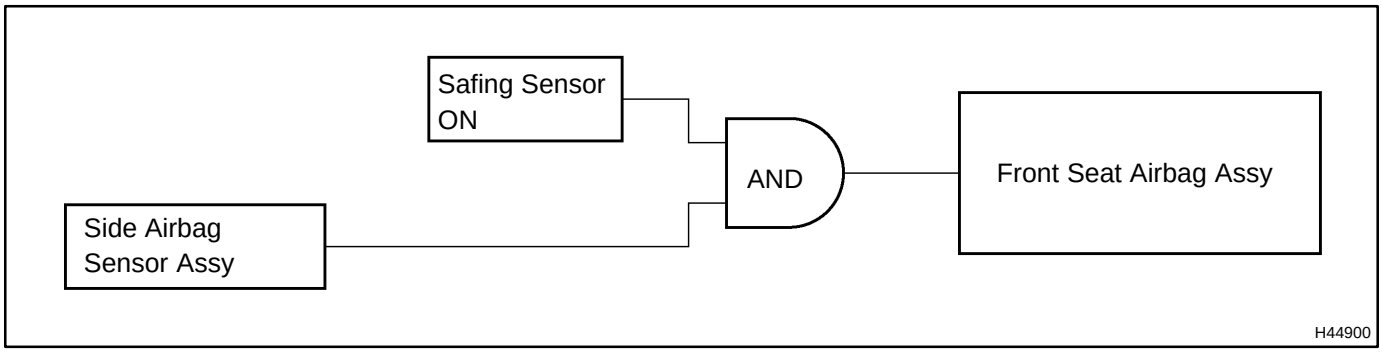

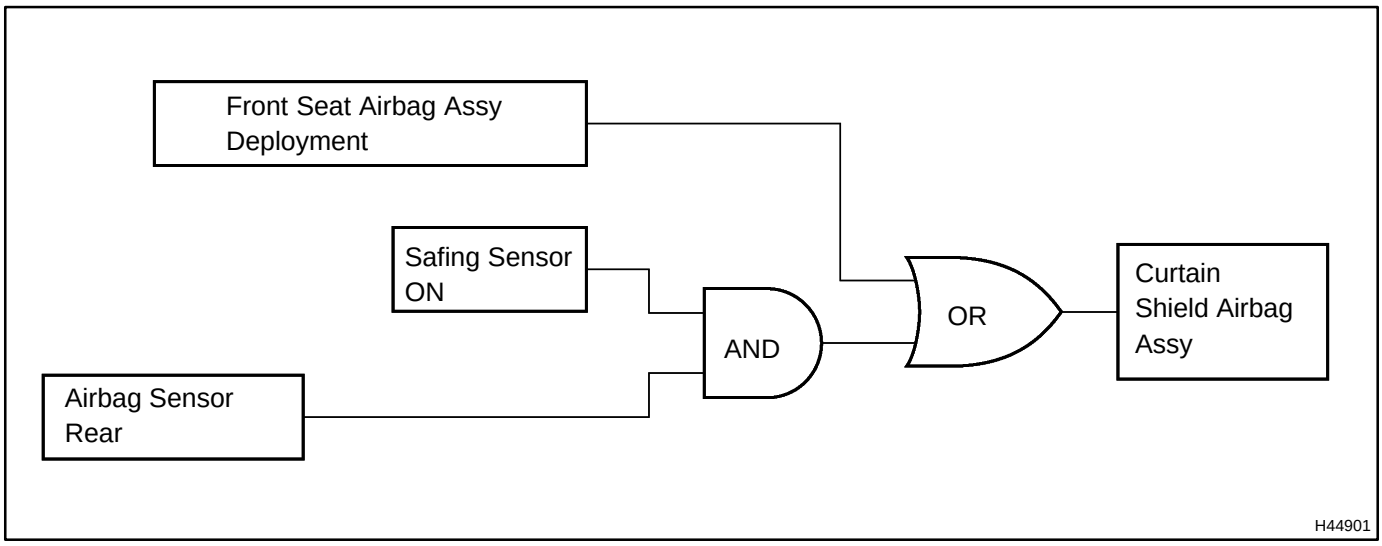

2. SRS CONNECTORS

HINT:

SRS connectors are located as shown in the following illustration.

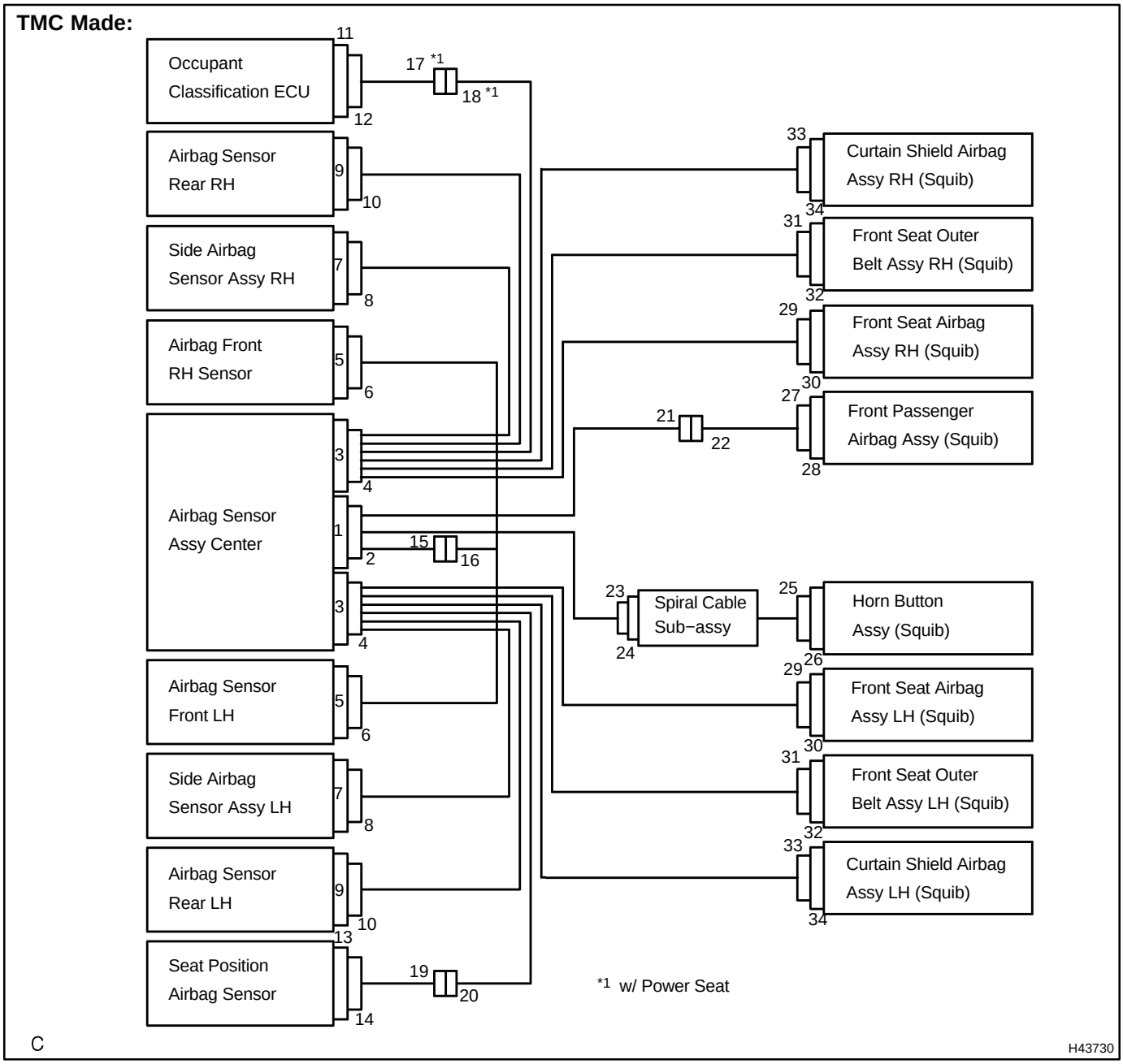

No.	Connector Type	Application
(1)	Terminal Twin−Lock Mechanism	Connectors 2, 4, 6, 8, 10, 14, 15, 16, 18, 20, 21, 22, 23, 29, 30
(2)	Activation Prevention Mechanism	Connectors 2, 4, 16, 22, 24, 26, 28, 30, 32, 34
(3)	Half Connection Prevention Mechanism	Connectors 6, 8, 10, 16, 21, 23, 29
(4)	Connector Lock Mechanism (1)	Connectors 25, 27, 31, 33
(5)	Connector Lock Mechanism (2)	Connectors 2, 4
(6)	Improper Connection Prevention Lock Mechanism	Connectors 1, 3

TMMK Made:

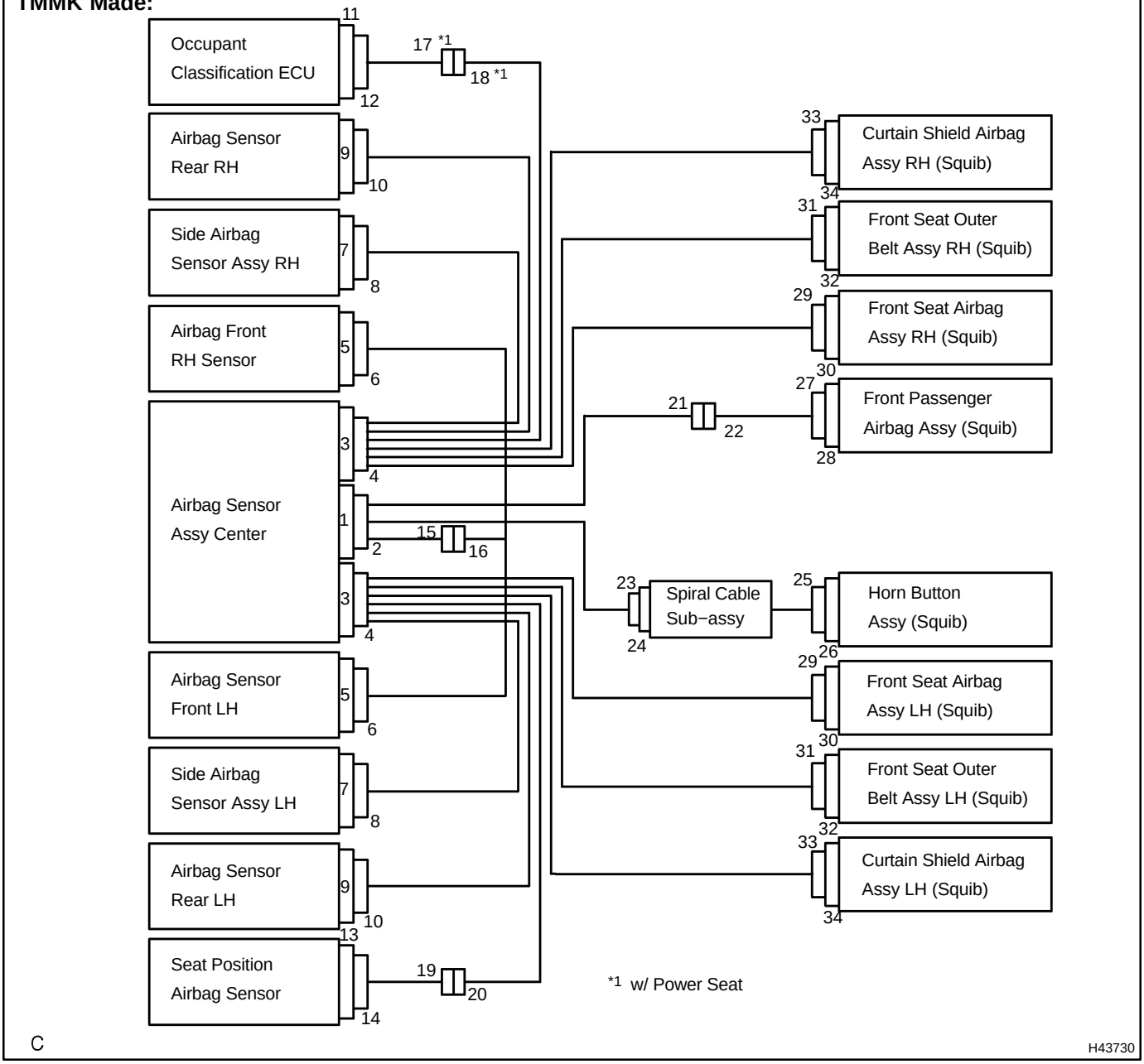

No.	Connector Type	Application
(1)	Terminal Twin−Lock Mechanism	Connectors 2, 4, 6, 8, 10, 14, 15, 16, 18, 20, 21, 22, 23 29, 30 33, 34
(2)	Activation Prevention Mechanism	Connectors 2, 4, 16, 22, 24, 26, 28, 30, 32, 33, 34
(3)	Half Connection Prevention Mechanism	Connectors 6, 8, 10, 16, 21, 23, 29, 33
(4)	Connector Lock Mechanism (1)	Connectors 25, 27, 31
(5)	Connector Lock Mechanism (2)	Connectors 2, 4
(6)	Improper Connection Prevention Lock Mechanism	Connectors 1, 3

(a) All connectors in the SRS are colored yellow to distinguish them from other connectors, except seat position airbag sensor connector and occupant classification ECU connector. Some connectors have special functions, and are specially designed for the SRS. These connectors use durable gold−plated terminals, and are placed in the locations shown on the previous page to ensure high reliability.

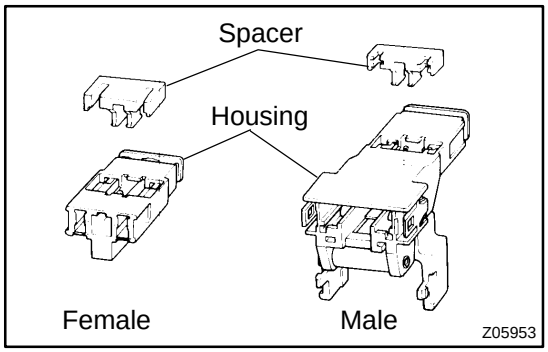

(1) Terminal twin−lock mechanism:
Each connector has a two−piece component consisting of a housing and a spacer. This design enables the terminal to be locked securely by two locking devices (the retainer and the lance) to prevent terminals from coming out.

(2) Activation prevention mechanism:
Each connector contains a short spring plate. When the connector is disconnected, the short spring plate automatically connects the positive (+) terminal and the negative (−) terminal of the squib.

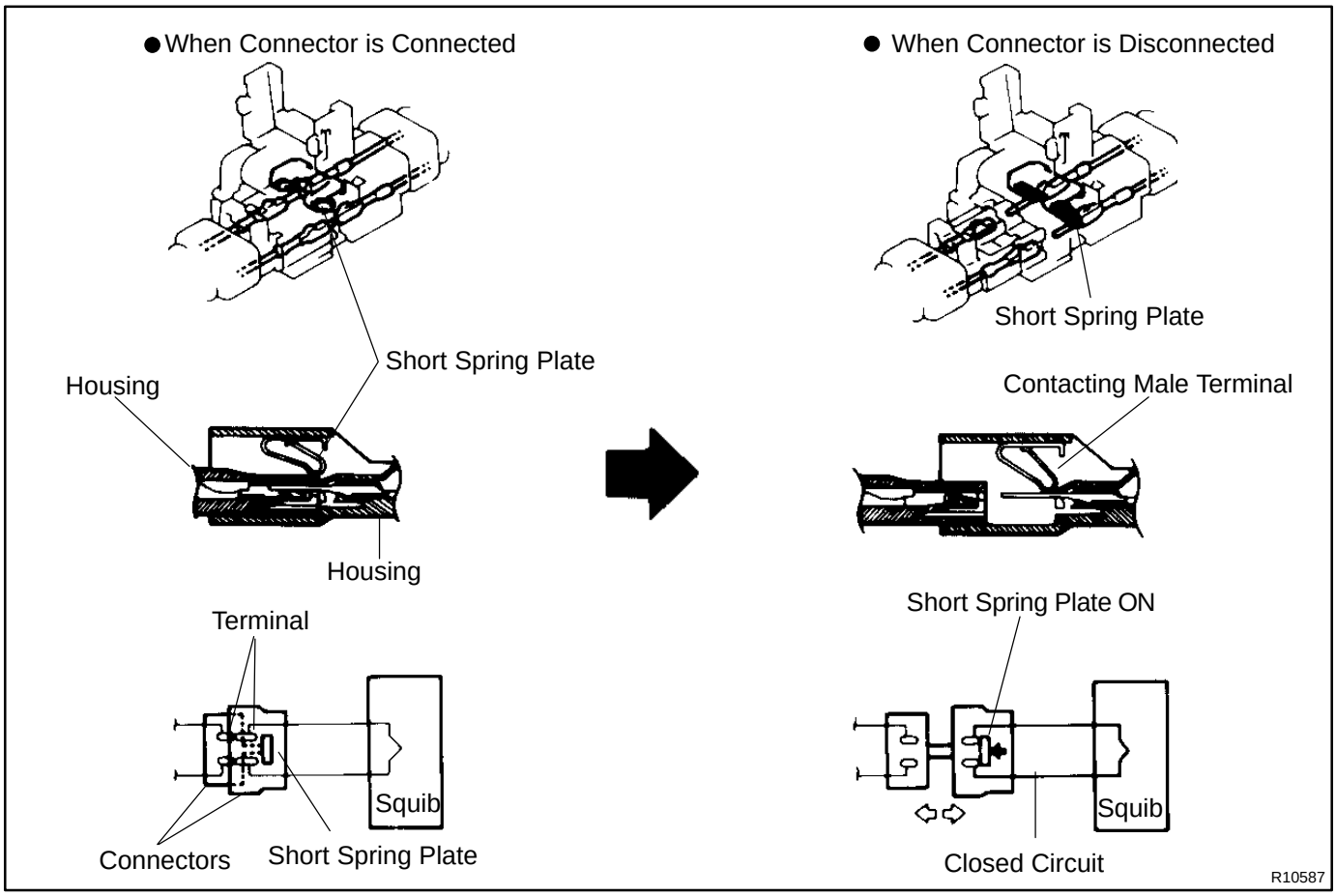

(3) Half connection prevention mechanism:
If the connector is not completely connected, the connector is disconnected due to the spring operation so that no continuity exists.

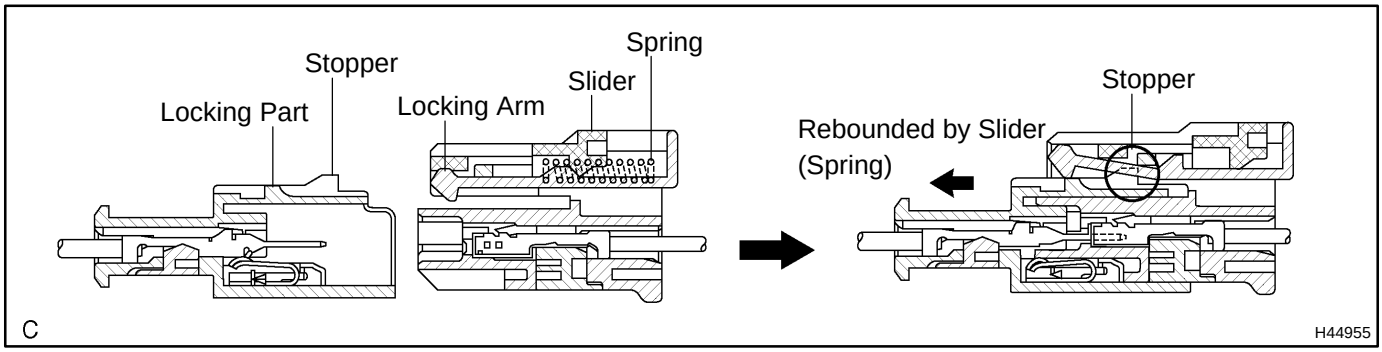

(4) Connector lock mechanism (1):
Locking the connector lock button connects the connector securely.

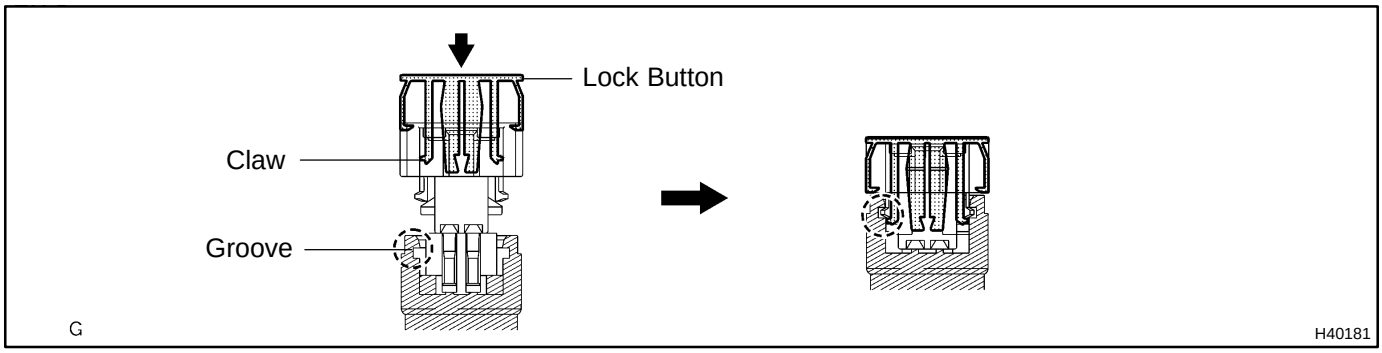

(5) Connector lock mechanism (2):
Both the primary lock with holder lances and the secondary lock with retainer prevent the connectors from becoming disconnected.

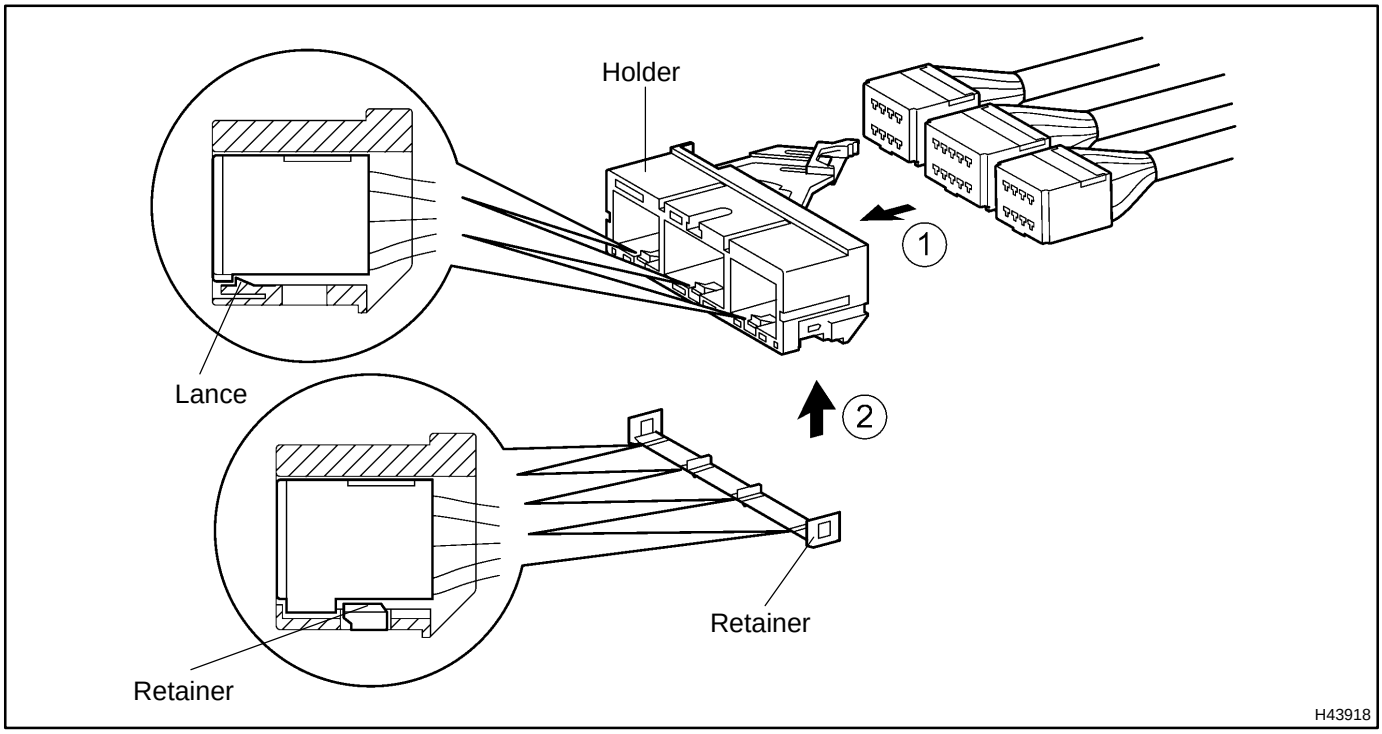

(6) Improper connection prevention lock mechanism:
When connecting the holder, the lever is pushed into the end by rotating around the A axis to lock the holder securely.

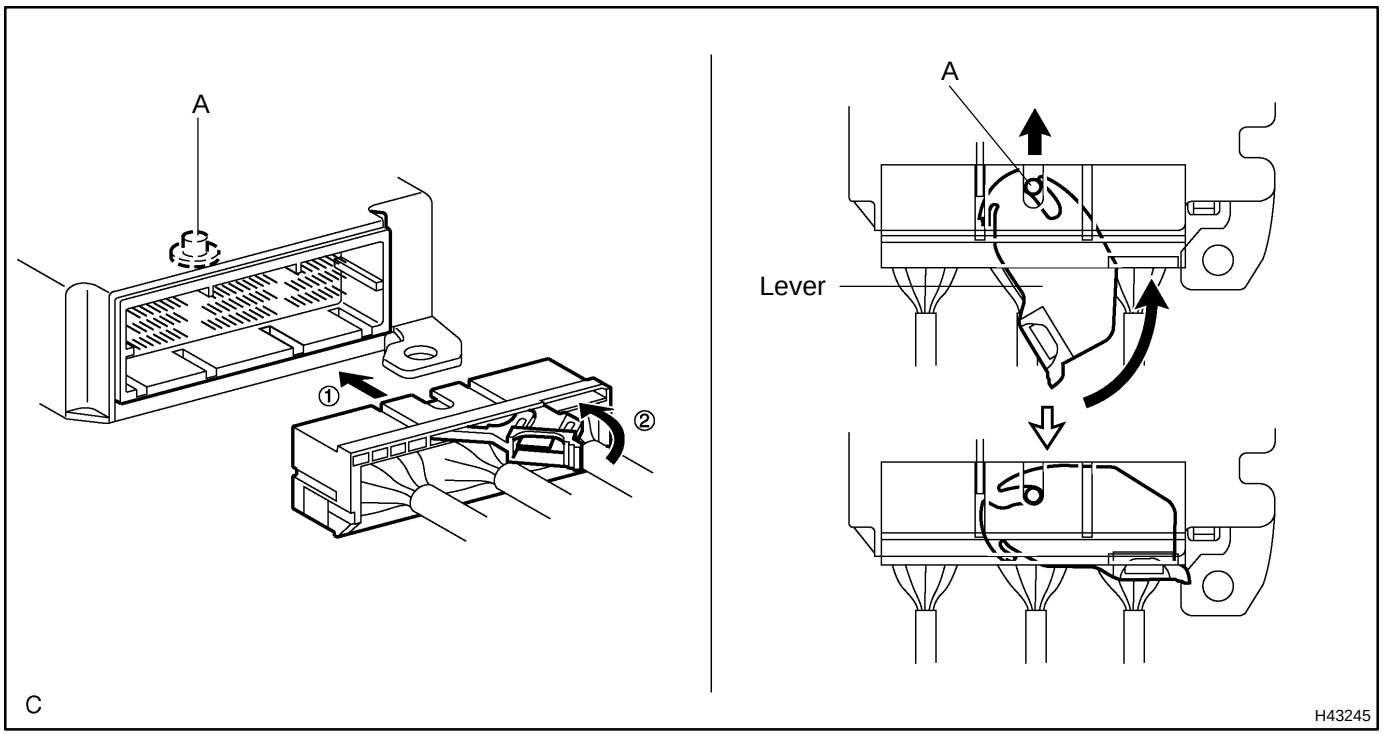

3. DISCONNECTION OF CONNECTORS FOR CURTAIN SHIELD AIRBAG ASSY (TMC MADE), HORN BUTTON ASSY AND FRONT PASSENGER AIRBAG ASSY

(a) Release the lock button (yellow part) of the connector using a screwdriver.

(b) Insert the screwdriver tip between the connector and the base, and then raise the connector.

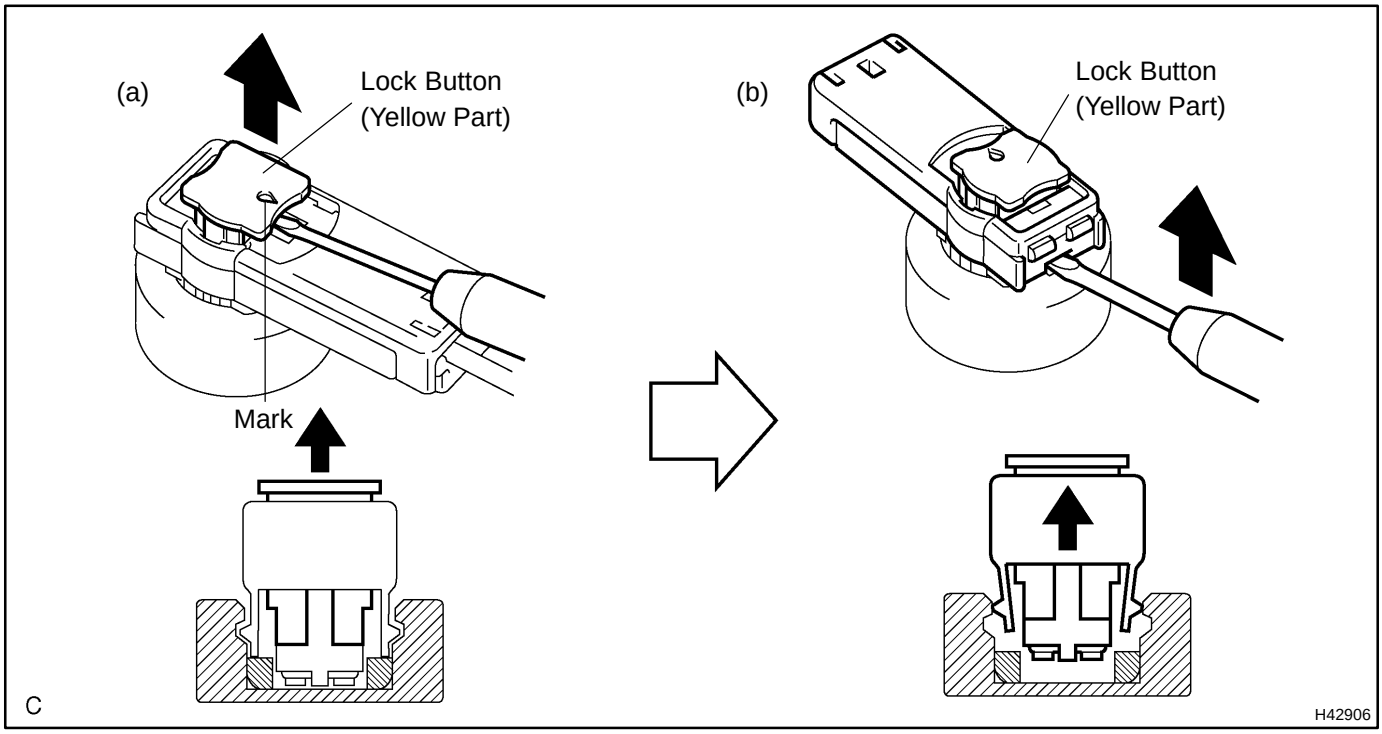

4. CONNECTION OF CONNECTORS FOR CURTAIN SHIELD AIRBAG ASSY (TMC MADE), HORN BUTTON ASSY AND FRONT PASSENGER AIRBAG ASSY

(a) Connect the connector.

(b) Push down securely on the lock button (yellow part) of the connector. (When locking, a click sound can be heard.)

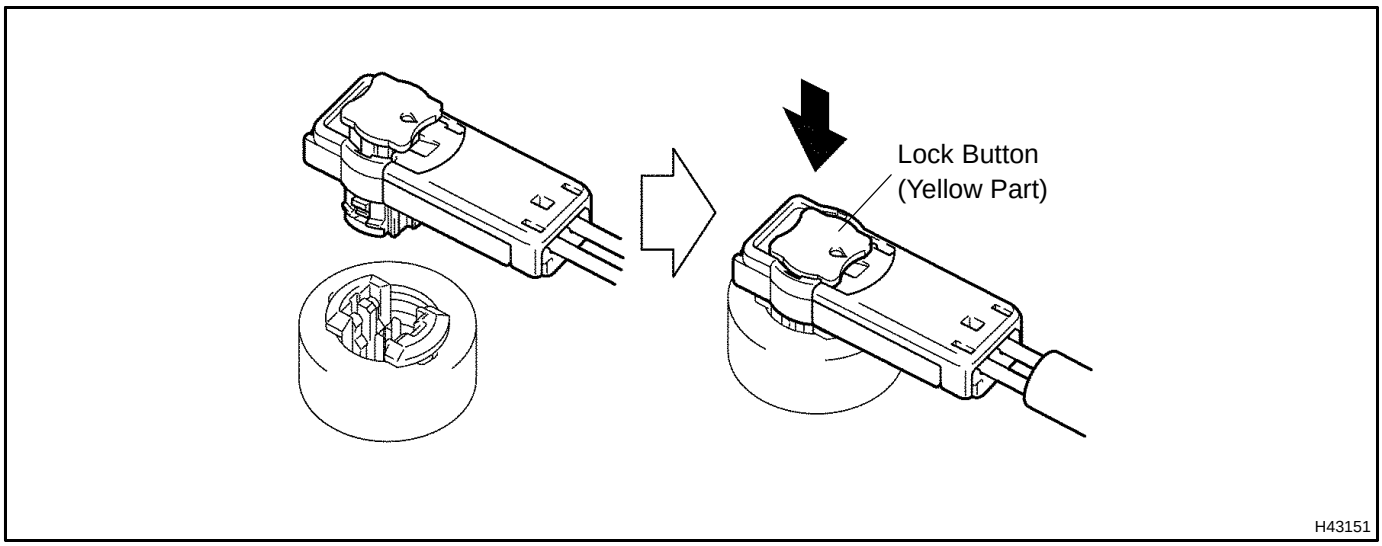

5. DISCONNECTION OF CONNECTOR FOR FRONT SEAT AIRBAG ASSY

(a) Place a finger on the slider, slide the slider to release the lock, and then disconnect the connector.

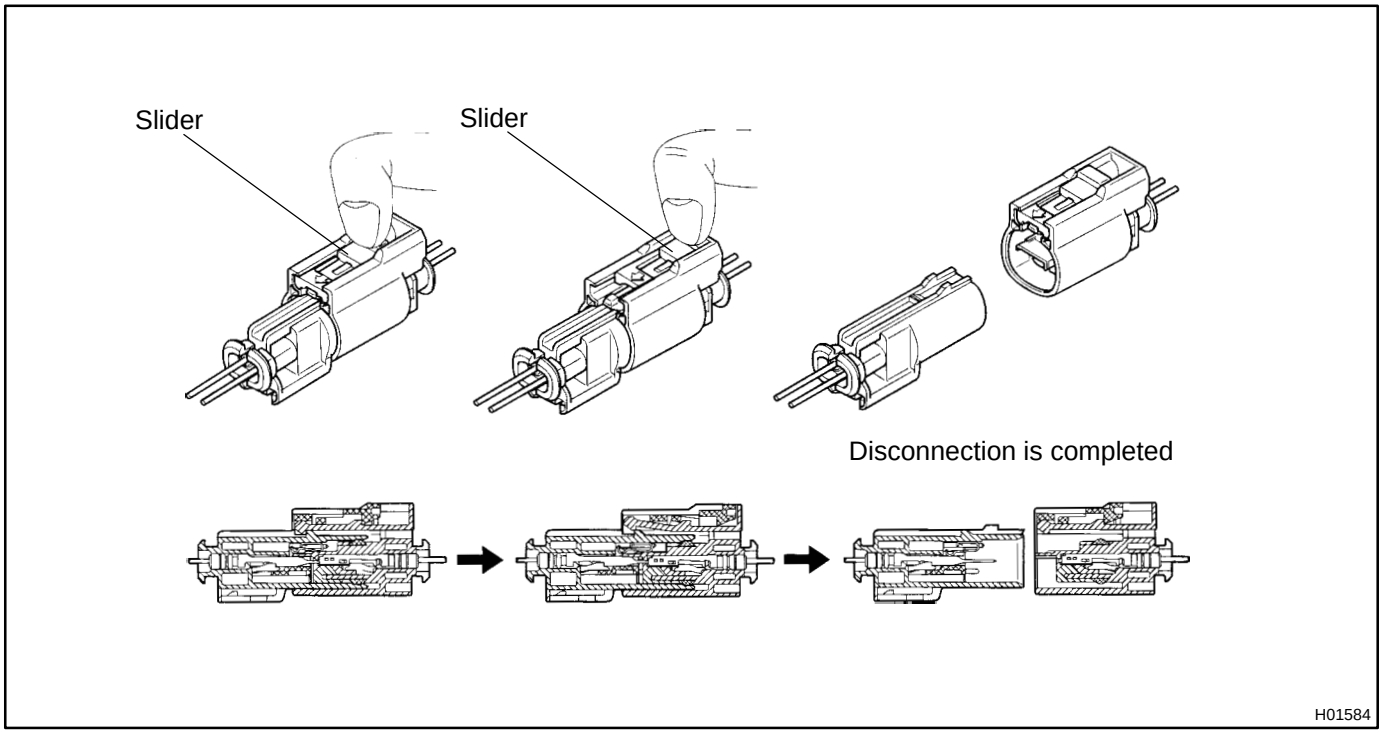

6. CONNECTION OF CONNECTOR FOR FRONT SEAT AIRBAG ASSY

(a) Connect the connector as shown in the illustration. (When locking, make sure that the slider returns to its original position and a click sound can be heard.)

HINT:

When connecting, the slider will slide. Be sure not to touch the slider while connecting, as it may result in an insecure fit.

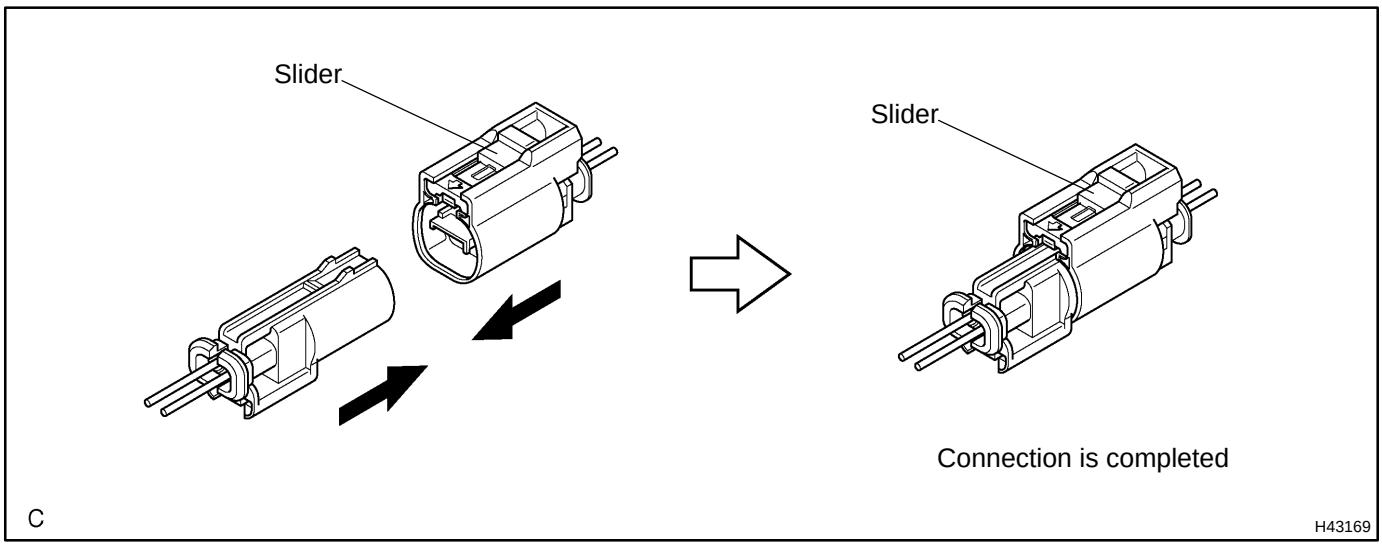

7. DISCONNECTION OF CONNECTOR FOR CURTAIN SHIELD AIRBAG ASSY (TMMK MADE)

(a) Place a finger on the slider, slide the slider to release the lock, and then disconnect the connector.

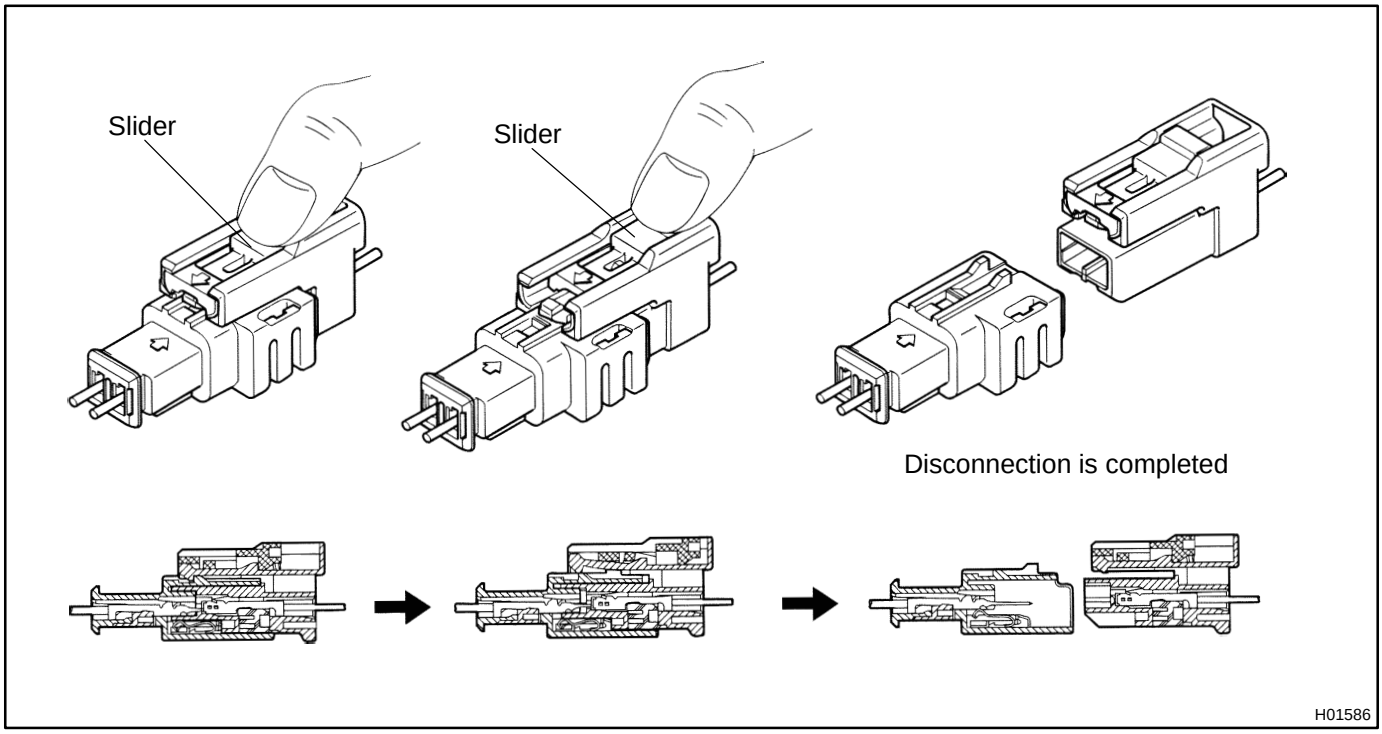

8. CONNECTION OF CONNECTOR FOR CURTAIN SHIELD AIRBAG ASSY (TMMK MADE)

(a) Connect the connector as shown in the illustration. (When locking, make sure that the slider returns to its original position and a click sound can be heard.)

HINT:

When connecting, the slider will slide. Be sure not to touch the slider while connecting, as it may result in an insecure fit.

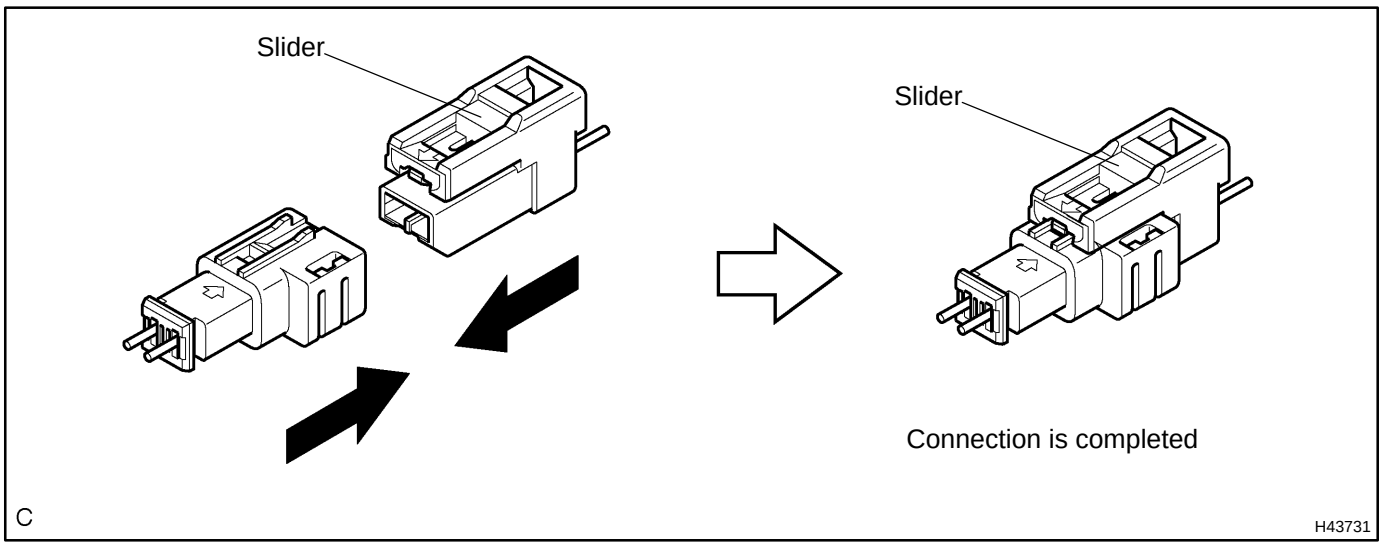

9. DISCONNECTION OF CONNECTOR FOR AIRBAG SENSOR ASSY CENTER

(a) Pull the lever by pushing part A as shown in the illustration and disconnect the holder (with connectors).

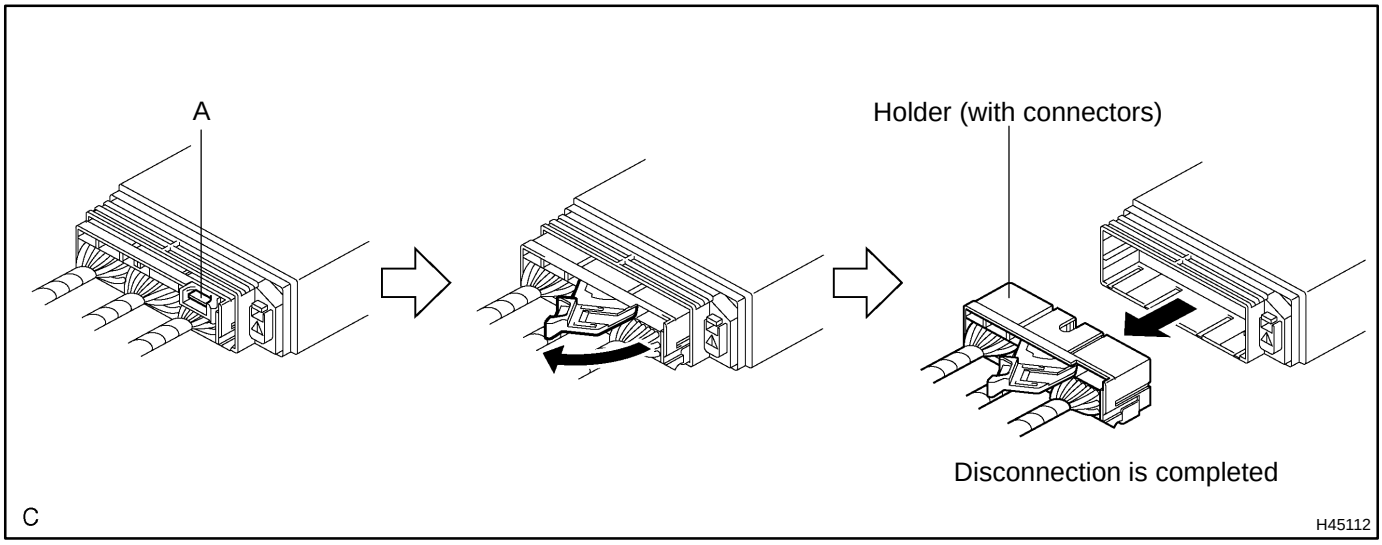

HINT:

Perform the following procedures when replacing the holder.

(b) Remove the holder.

(1) Using a screwdriver, unlock the retainer.

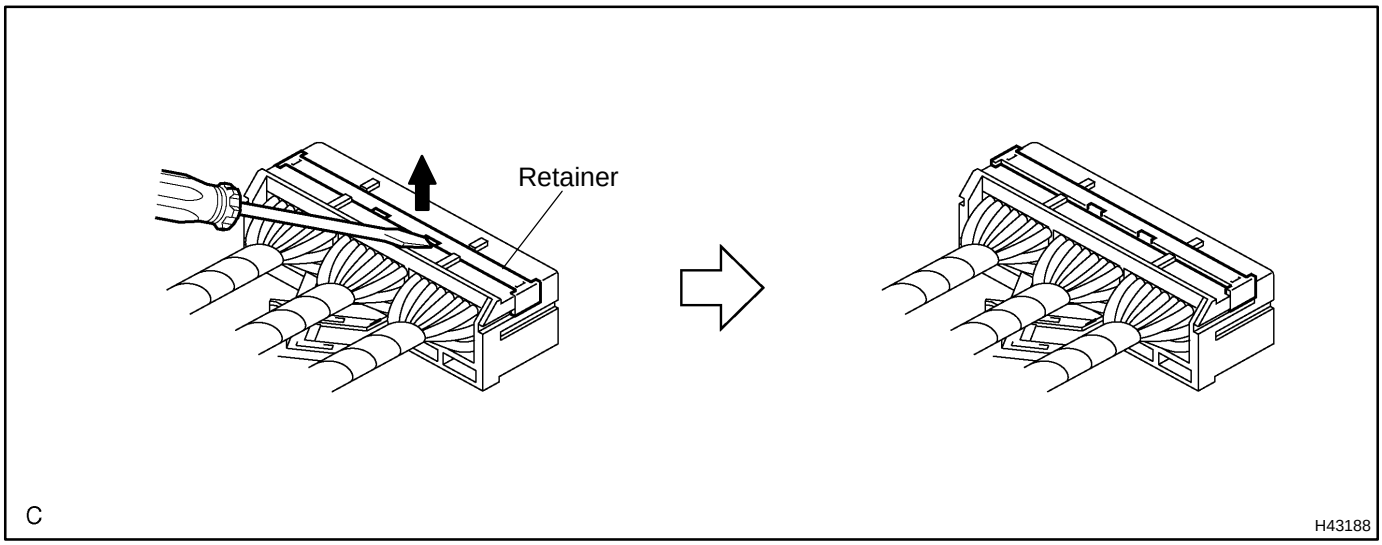

(2) Release the lances and remove the holder.

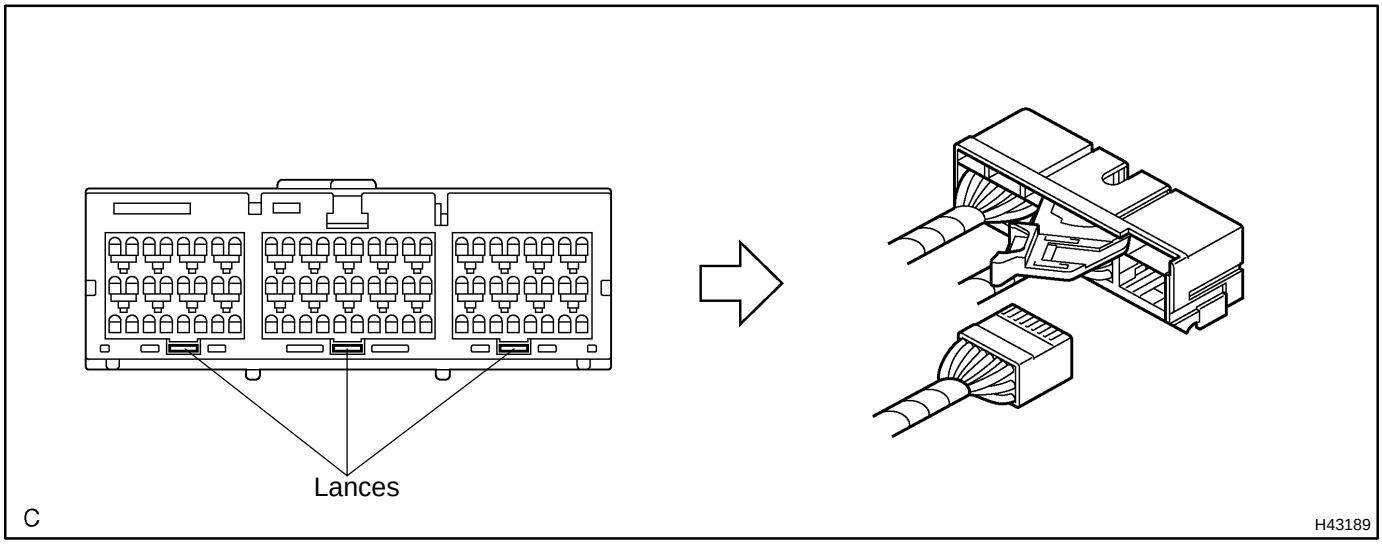

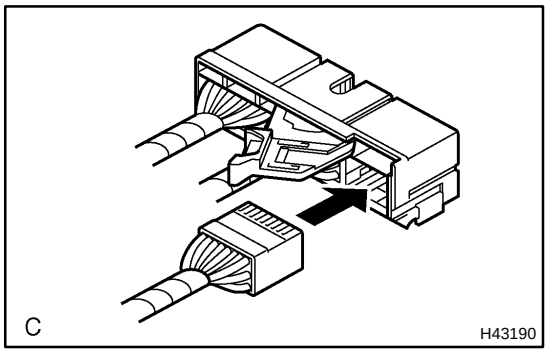

(c) Install the holder.

(1) Install the connectors to the holder. (When locking, a click sound can be heard.)

HINT:

The retainer is locked when the holder is connected.

10. CONNECTION OF CONNECTOR FOR AIRBAG SENSOR ASSY CENTER

(a) Firmly insert the holder (with connectors) until it can not be pushed any further.

(b) Push the lever to connect the holder (with connectors). (When locking, a click sound can be heard.)

HINT:

The holder slides when connecting. Be sure not to hold the holder while connecting, as it may result in an insecure fit.

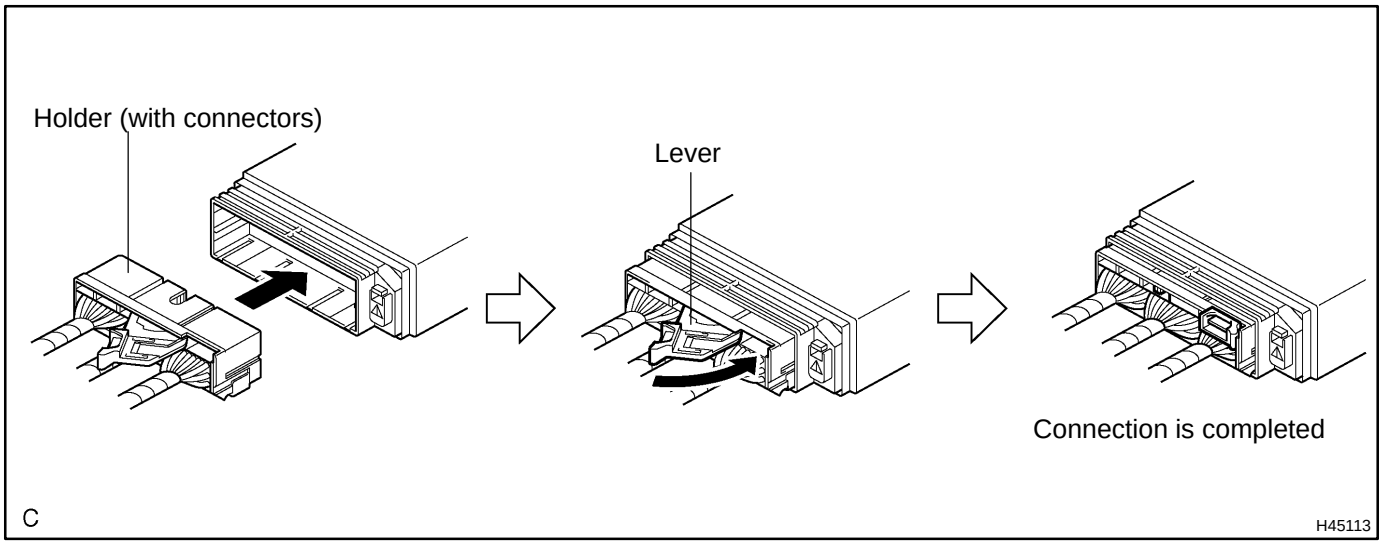

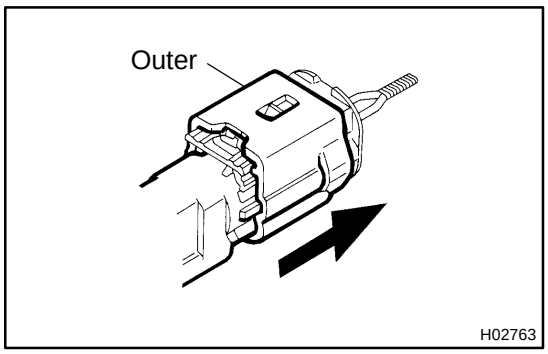

11. DISCONNECTION OF CONNECTORS FOR AIRBAG FRONT SENSOR, SIDE AIRBAG SENSOR AND AIRBAG SENSOR REAR

(a) While holding both outer flank sides, slide the outer in the direction shown by the arrow.

(b) When the connector lock is released, the connectors are disconnected.

HINT:

Be sure to hold both outer flank sides. Holding the top and bottom will make disconnection difficult.

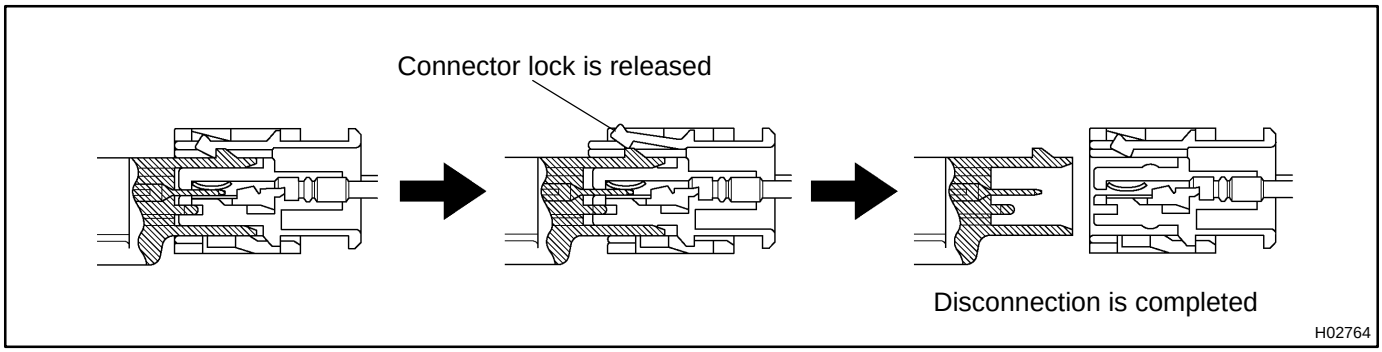

12. CONNECTION OF CONNECTORS FOR AIRBAG FRONT SENSOR, SIDE AIRBAG SENSOR AND AIRBAG SENSOR REAR

(a) Connect the connector as shown in the illustration. (When locking, make sure that the outer returns to its original position and a click sound can be heard.)

HINT:

When connecting the outer slides. Be sure not to hold the outer while connecting, as it may result in an insecure fit.

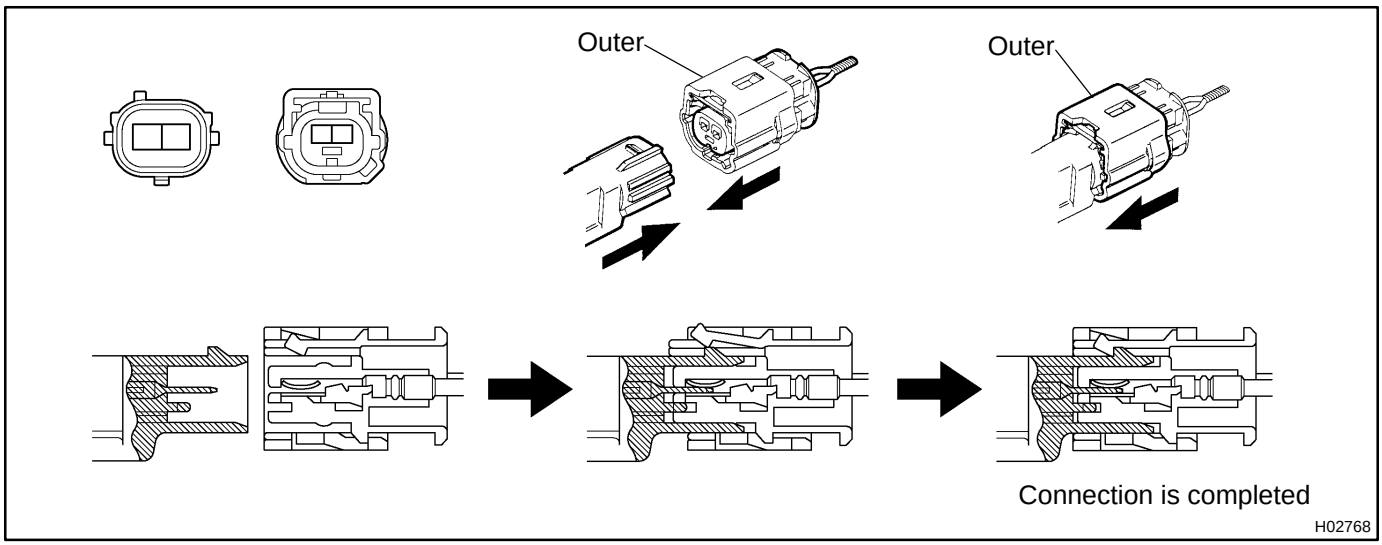

13. NOTICE REGARDING AIRBAG SENSOR INSTALLATION BOLT

(a) As the tightening torque is different depending on the property class of the airbag sensor installation bolt, choose a bolt referring to the following illustration and tighten it with the specified tightening torque written in the repair manual.

	PROPERTY CLASS	6T	8T
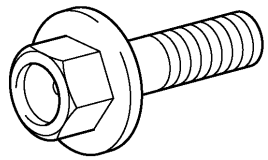	Deep Recess Bolt	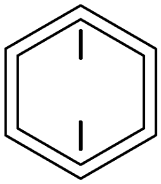	

T C92133

H41649

600OM−02

ON−VEHICLE INSPECTION

CAUTION:

Be sure to perform the initialization of the occupant classification ECU under the conditions listed below (See page 05−1452). If the initialization is not performed, the SRS may not operate properly.

- **The occupant classification ECU is replaced.**
- **Accessories (seatback tray or seat cover, etc.) are installed to the vehicle.**
- **The passenger seat is removed from the vehicle.**
- **Both the SRS warning light and passenger airbag ON/OFF indicator light (”OFF”) come on.**
- **The vehicle is brought to the workshop for repair purpose due to an accident or collision.**

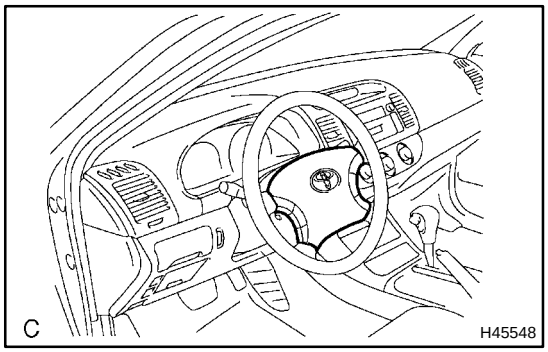

1. HORN BUTTON ASSY (VEHICLE NOT INVOLVED IN COLLISION)

HINT:

There are two types of horn button assy:

One is used with 3−spoke steering wheel assy and the other is used with 4−spoke steering wheel assy.

(a) Perform a diagnostic system check (see page 05−1464).

(b) With the horn button assy installed on the vehicle, perform a visual check. If there are any defects as mentioned below, replace the horn button assy with a new one:

Cuts, minute cracks or marked discoloration on the horn button assy top surface or in the grooved portion.

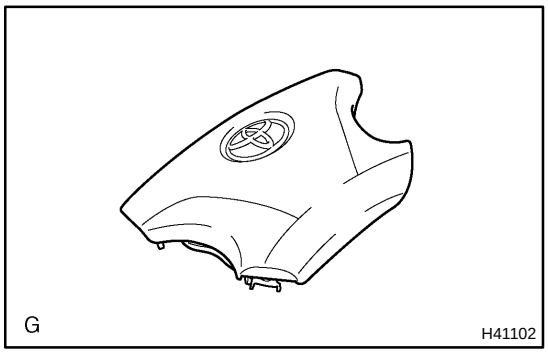

2. HORN BUTTON ASSY (VEHICLE INVOLVED IN COLLISION AND AIRBAG IS NOT DEPLOYED)

(a) Perform a diagnostic system check (see page 05−1464).

(b) With the horn button assy removed from the vehicle, perform a visual check. If there are any defects as mentioned below, replace the horn button assy or steering wheel assy with a new one:

- Cuts, minute cracks or marked discoloration on the horn button assy top surface or in the grooved portion.
- Cracks or other damage to the connector.
- Deformation of the steering wheel assy.

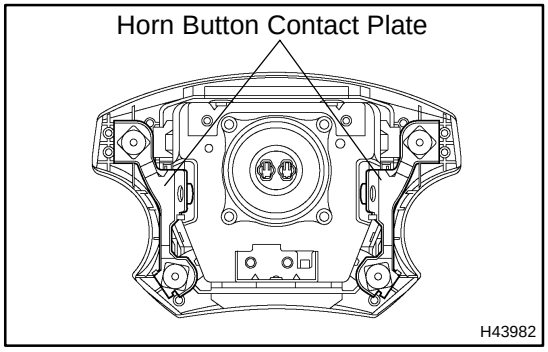

- Deformation of the horn button contact plate of the horn button assy.

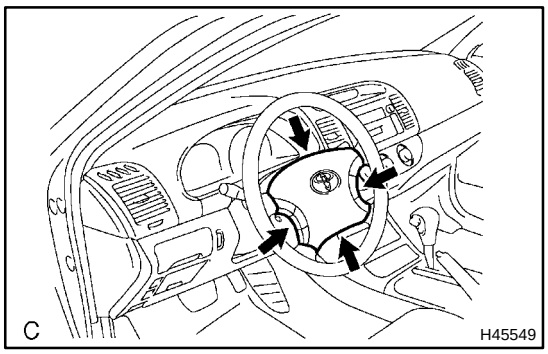

- There should be no interference between the horn button assy and steering wheel assy, and the clearance should be uniform all the way around when the new horn button assy is installed on the steering wheel assy.

CAUTION:
For removal and installation procedures of the horn button assy, see page 60−25, and be sure to follow the correct procedure.

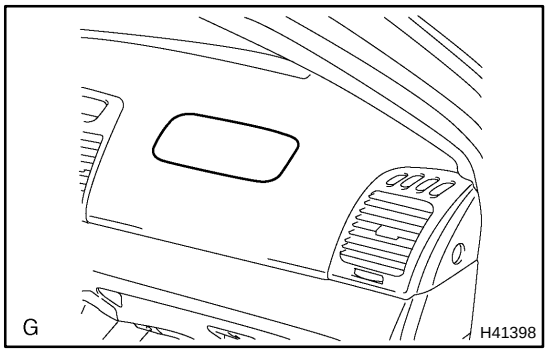

3. FRONT PASSENGER AIRBAG ASSY (VEHICLE NOT INVOLVED IN COLLISION)

(a) Perform a diagnostic system check (see page 05−1464).

(b) With the front passenger airbag assy installed on the vehicle, perform a visual check. If there are any defects as mentioned below, replace the instrument panel with a new one:

Cuts, minute cracks or marked discoloration on the instrument panel around the doorless instrument panel passenger airbag assy.

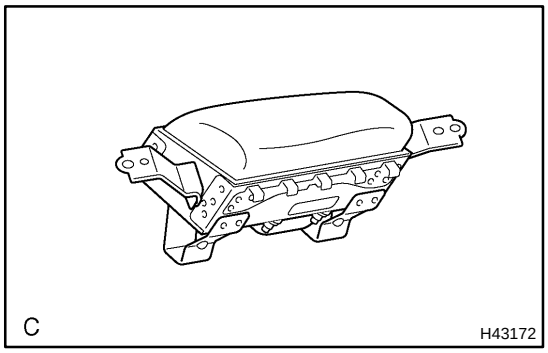

4. FRONT PASSENGER AIRBAG ASSY (VEHICLE INVOLVED IN COLLISION AND AIRBAG IS NOT DEPLOYED)

(a) Perform a diagnostic system check (see page 05−1464).

(b) With the front passenger airbag assy removed from the vehicle, perform a visual check. If there are any defects as mentioned below, replace the front passenger airbag assy, instrument panel or instrument panel reinforcement with a new one:

- Cuts, minute cracks or marked discoloration on the front passenger airbag assy.
- Cracks or other damage to the connectors.

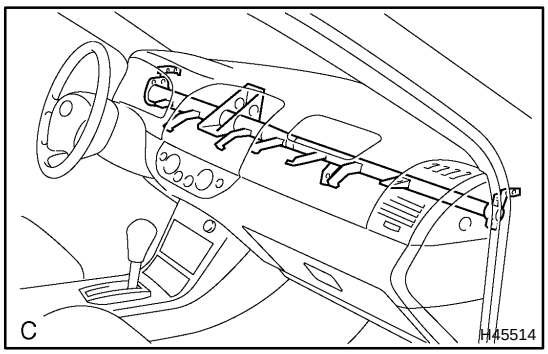

- Deformation or cracks on the instrument panel or instrument panel reinforcement.

CAUTION:
For removal and installation procedures of the front passenger airbag assy, see page 60−37, and be sure to follow the correct procedure.

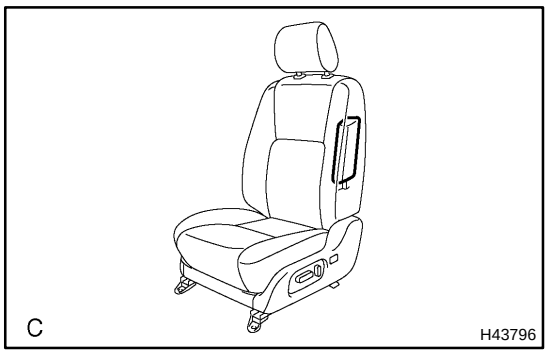

5. FRONT SEAT AIRBAG ASSY (VEHICLE NOT INVOLVED IN COLLISION)

(a) Perform a diagnostic system check (see page 05−1464).

(b) With the front seat airbag assy installed on the vehicle, perform a visual check. If there are any defects as mentioned below, replace the front seatback assy with a new one:

Cuts, minute cracks or marked discoloration on the front seatback assy around the front seat airbag assy.

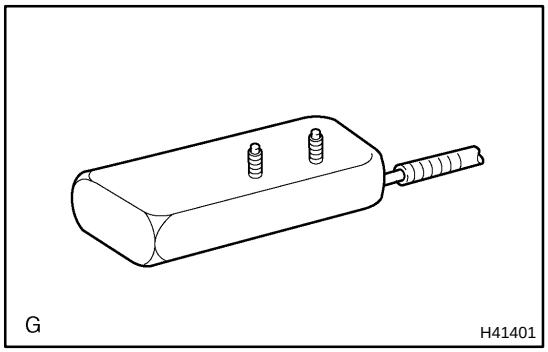

6. FRONT SEAT AIRBAG ASSY (VEHICLE INVOLVED IN COLLISION AND AIRBAG IS NOT DEPLOYED)

(a) Perform a diagnostic system check (see page 05−1464).

(b) With the front seat airbag assy removed from the vehicle, perform a visual check. If there are any defects as mentioned below, replace the front seat airbag assy with a new one:

- Cuts, minute cracks or marked discoloration on the front seat airbag assy.
- Cracks or other damage to the wire harness or connector.

CAUTION:

For removal and installation procedures of the front seat airbag assy, see page 72−23 (power seat type) or see page 72−15 (manual seat type), and be sure to follow the correct procedure.

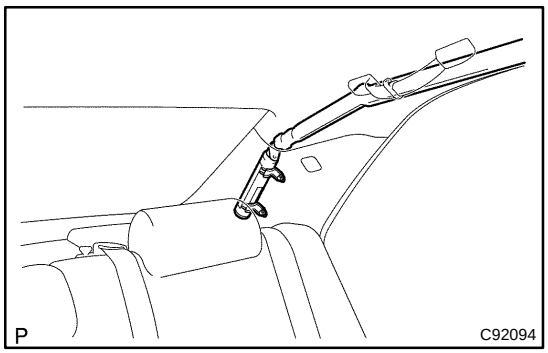

7. CURTAIN SHIELD AIRBAG ASSY (VEHICLE NOT INVOLVED IN COLLISION)

(a) Perform a diagnostic system check (see page 05−1464).

(b) With the curtain shield airbag assy installed on the vehicle, perform a visual check. If there are any defects as mentioned below, replace the front pillar garnish or roof headlining assy with a new one:

Cuts, minute cracks or marked discoloration on the front pillar garnish or roof headlining assy around the curtain shield airbag assy.

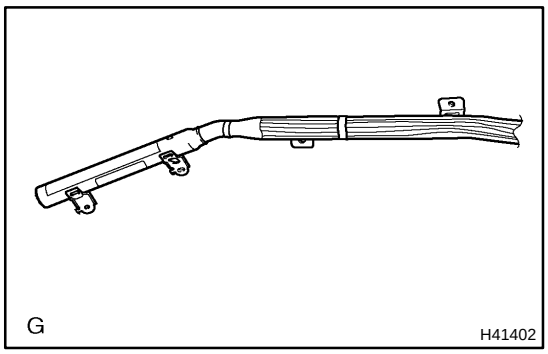

8. CURTAIN SHIELD AIRBAG ASSY (VEHICLE INVOLVED IN COLLISION AND AIRBAG IS NOT DEPLOYED)

(a) Perform a diagnostic system check (see page 05−1464).

(b) With the curtain shield airbag assy removed from the vehicle, perform a visual check. If there are any defects as mentioned below, replace the curtain shield airbag assy with a new one:

- Cuts, minute cracks or marked discoloration on the curtain shield airbag assy.
- Cracks or other damage to the connector.

CAUTION:

For removal and installation procedures of the curtain shield airbag assy, see page 60−46, and be sure to follow the correct procedure.

9. AIRBAG SENSOR ASSY CENTER (VEHICLE NOT INVOLVED IN COLLISION)

(a) Perform a diagnostic system check (see page 05−1464).

10. AIRBAG SENSOR ASSY CENTER (VEHICLE INVOLVED IN COLLISION AND AIRBAG IS NOT DEPLOYED)

(a) Perform a diagnostic system check (see page 05−1464).

11. AIRBAG SENSOR ASSY CENTER (VEHICLE INVOLVED IN COLLISION AND AIRBAG IS DEPLOYED)

(a) Replace the airbag sensor assy center (see page 60−59).

CAUTION:

For removal and installation procedures of the airbag sensor assy center, see page 60−59, and be sure to follow the correct procedure.

HINT:

The airbag sensor assy center should be replaced after any of the airbags has deployed, as it has been subjected to the impact.

12. AIRBAG FRONT SENSOR (VEHICLE NOT INVOLVED IN COLLISION)

(a) Perform a diagnostic system check (see page 05−1464).

13. AIRBAG FRONT SENSOR (VEHICLE INVOLVED IN COLLISION AND AIRBAG IS NOT DEPLOYED)

(a) Perform a diagnostic system check (see page 05−1464).

(b) When the front bumper of the vehicle or its periphery is damaged, check if there is any damage to the airbag sensor front. If any of the airbag sensor front have defects as mentioned below, replace it with a new one:

- Cracks, dents or chips in the case.
- Cracks or other damage to the connector.
- Peeling off of the label or damage to the serial number.

CAUTION:

For removal and installation procedures of the airbag sensor front, see page 60−63, and be sure to follow the correct procedure.

14. AIRBAG FRONT SENSOR (VEHICLE INVOLVED IN COLLISION AND AIRBAG IS DEPLOYED)

(a) Replace the airbag front sensor (see page 60−61).

CAUTION:

For removal and installation procedures of the airbag sensor front, see page 60−63, and be sure to follow the correct procedure.

HINT:

The airbag sensor front on the impacted side should be replaced after the horn button assy or front passenger airbag assy has deployed.

15. SIDE AIRBAG SENSOR ASSY (VEHICLE NOT INVOLVED IN COLLISION)

(a) Perform a diagnostic system check (see page 05−1464).

16. SIDE AIRBAG SENSOR ASSY (VEHICLE INVOLVED IN COLLISION AND AIRBAG IS NOT DEPLOYED)

(a) Perform a diagnostic system check (see page 05−1464).

(b) When the center pillar of the vehicle or its periphery is damaged, check if there is any damage to the side airbag sensor assy. If there are any defects as mentioned below, replace the side airbag sensor assy with a new one:

- Cracks, dents or chips in the case.
- Cracks or other damage to the connector.
- Peeling off of the label or damage to the serial number.

CAUTION:

For removal and installation procedures of the side airbag sensor assy, see page 60−65, and be sure to follow the correct procedure.

17. SIDE AIRBAG SENSOR ASSY (VEHICLE INVOLVED IN COLLISION AND AIRBAG IS DEPLOYED)

(a) Replace the side airbag sensor assy (see page 60−65).

CAUTION:

For removal and installation procedures of the side airbag sensor assy, see page 60−65, and be sure to follow the correct procedure.

HINT:

The side airbag sensor assy on the impacted side should be replaced after the front seat airbag assy and curtain shield airbag assy have deployed.

18. AIRBAG SENSOR REAR (VEHICLE NOT INVOLVED IN COLLISION)

(a) Perform a diagnostic system check (see page 05−1464).

19. AIRBAG SENSOR REAR (VEHICLE INVOLVED IN COLLISION AND AIRBAG IS NOT DEPLOYED)

(a) Perform a diagnostic system check (see page 05−1464).

(b) When the quarter panel of the vehicle or its periphery is damaged, check if there is any damage to the airbag sensor rear. If there are any defects as mentioned below, replace the airbag sensor rear with a new one:

- Cracks, dents or chips in the case.
- Cracks or other damage to the connector.
- Peeling off of the label or damage to the serial number.

CAUTION:

For removal and installation procedures of the airbag sensor rear, see page 60−67, and be sure to follow the correct procedure.

20. AIRBAG SENSOR REAR (VEHICLE INVOLVED IN COLLISION AND AIRBAG IS DEPLOYED)

(a) Replace the airbag sensor rear (see page 60−67).

CAUTION:

For removal and installation procedures of the airbag sensor rear, see page 60−67, and be sure to follow the correct procedure.

HINT:
The airbag sensor rear on the impacted side should be replaced after the curtain shield airbag assy has deployed.

21. SEAT POSITION AIRBAG SENSOR (VEHICLE NOT INVOLVED IN COLLISION)

(a) Perform a diagnostic system check (see page 05−1464).

22. SEAT POSITION AIRBAG SENSOR (VEHICLE INVOLVED IN COLLISION)

(a) Perform a diagnostic system check (see page 05−1464).

(b) Even if the airbag was not deployed, perform a visual check for damage to the seat position airbag sensor including the following:

- Cracks, dents or chips in the case.
- Cracks or other damage to the connector.

CAUTION:
For removal and installation procedures of the seat position airbag sensor, see page 60−69, and be sure to follow the correct procedure.

23. OCCUPANT CLASSIFICATION ECU (VEHICLE NOT INVOLVED IN COLLISION)

(a) Perform a diagnostic system check (see page 05−1464).

24. OCCUPANT CLASSIFICATION ECU (VEHICLE INVOLVED IN COLLISION)

(a) Perform a diagnostic system check (see page 05−1464).

(b) Even if the airbag was not deployed, perform a visual check for damage to the occupant classification ECU including the following:

- Cracks, dents or chips in the case.
- Cracks or other damage to the connector.

CAUTION:
For removal and installation procedures of the occupant classification ECU, see page 60−72, and be sure to follow the correct procedure.

25. WIRE HARNESS AND CONNECTOR (VEHICLE NOT INVOLVED IN COLLISION)

(a) Perform a diagnostic system check (see page 05−1464).

26. WIRE HARNESS AND CONNECTOR (VEHICLE INVOLVED IN COLLISION)

(a) Perform a diagnostic system check (see page 05−1464).

(b) Check for breaks in all wires of the SRS wire harness and exposed conductors.

(c) Check to see if the SRS wire harness connectors are cracked or chipped.

HINT:
The SRS wire harness is integrated with the engine room main wire, instrument panel wire, instrument panel wire No.2, floor wire, floor wire No.2, front seat LH wire (TMC made) and front seat RH wire.

HORN BUTTON ASSY

COMPONENTS

600Y3−01

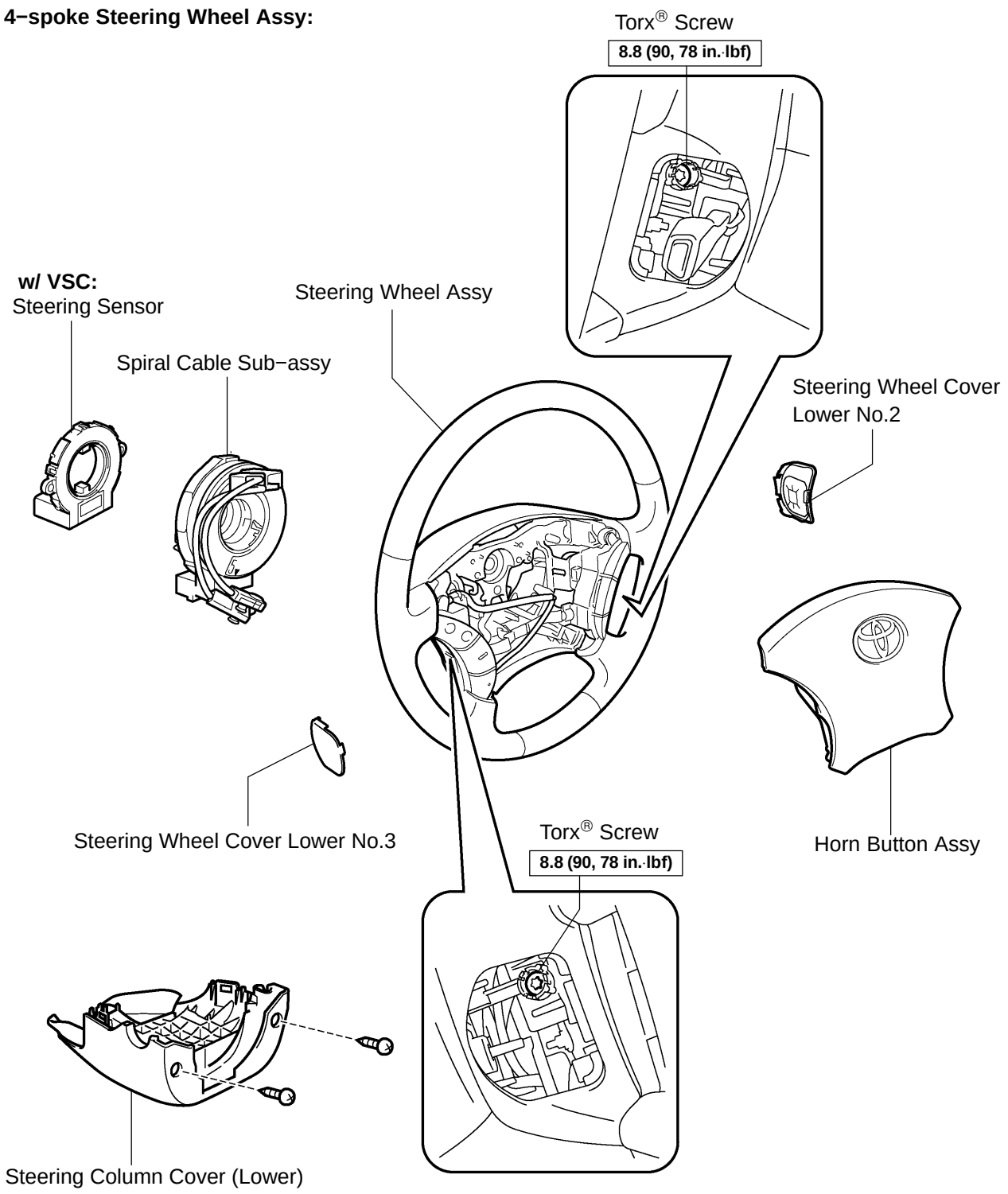

3−spoke Steering Wheel Assy:

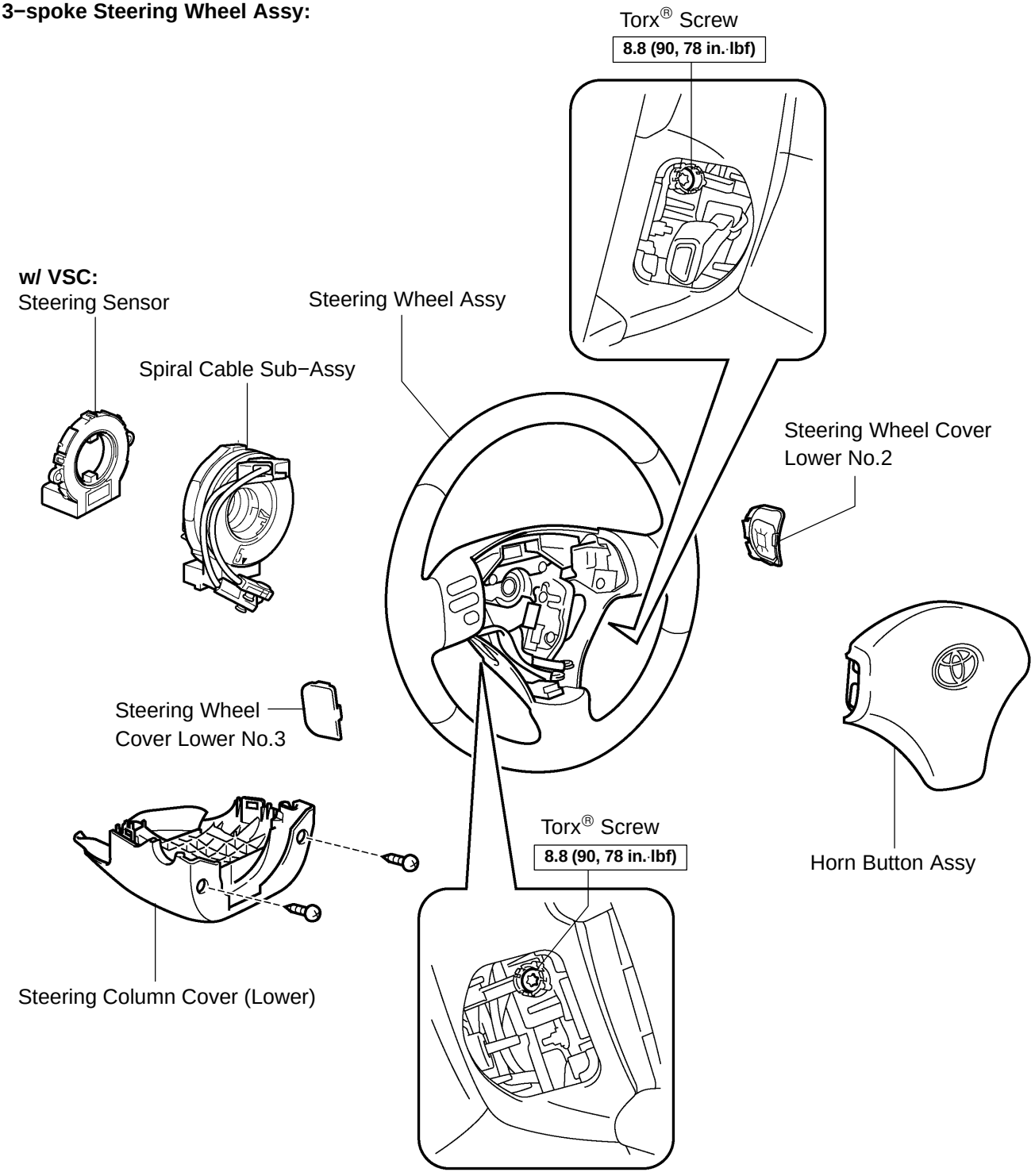

C N·m (kgf·cm, ft·lbf) : Specified torque

H45530

600Y4−01

REPLACEMENT

HINT:

- Installation is in the reverse order of removal.
- There are two types of horn button assy:
  One is used with 3−spoke steering wheel assy and the other is used with 4−spoke steering wheel assy.

1. PRECAUTION (See page 60−1)

2. DISCONNECT BATTERY NEGATIVE TERMINAL

CAUTION:

After removing the terminal, wait for at least 90 seconds before starting the operation.

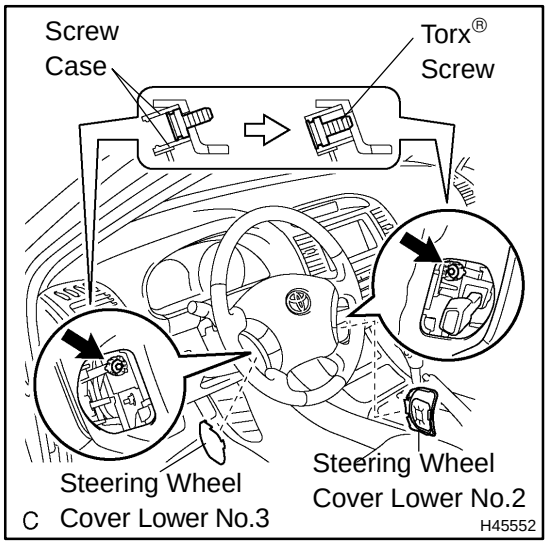

3. REMOVE STEERING WHEEL COVER LOWER NO.2

(a) Using a screwdriver, remove the steering wheel cover lower No.2.

HINT:

Tape up the screwdriver tip before use.

4. REMOVE STEERING WHEEL COVER LOWER NO.3

(a) Using a screwdriver, remove the steering wheel cover lower No.3.

HINT:

Tape up the screwdriver tip before use.

5. REMOVE HORN BUTTON ASSY

(a) Place the front wheels facing straight ahead.

(b) Using a torx® socket wrench (T30), loosen the 2 torx® screws until the groove along the screw circumference catches on the screw case.

(c) Pull out the horn button assy from the steering wheel assy and support the horn button assy with one hand as shown in the illustration.

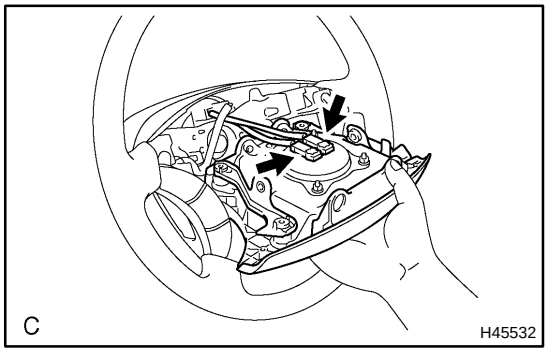

NOTICE:

When removing the horn button assy, do not pull the airbag wire harness.

(d) Disconnect the horn connector.

(e) Disconnect the connector from the horn button assy.

NOTICE:

When handling the airbag connector, take care not to damage the airbag wire harness.

(f) Remove the horn button assy.

6. INSTALL HORN BUTTON ASSY

(a) Support the horn button assy with one hand as shown in the illustration.

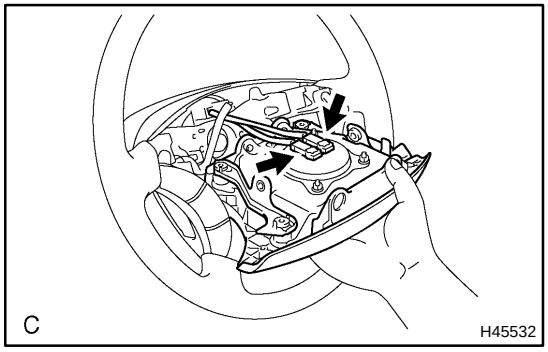

(b) Connect the connector to the horn button assy.

NOTICE:

When handling the airbag connector, take care not to damage the airbag wire harness.

(c) Connect the horn connector.

(d) Confirm that the circumference groove of the torx® screw fits in the screw case, and place the horn button assy onto the steering wheel assy.

(e) Using a torx® socket wrench (T30), tighten the 2 torx® screws.
Torque: 8.8 N·m (90 kgf·cm, 78 in.·lbf)

7. CONNECT BATTERY NEGATIVE TERMINAL

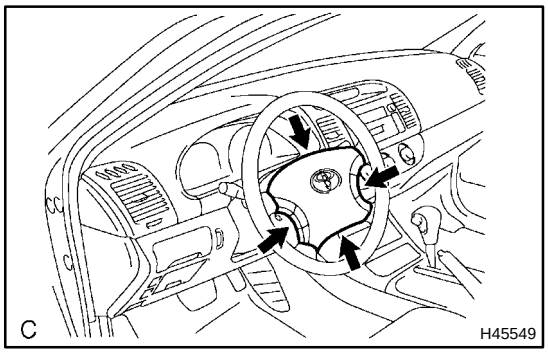

8. INSPECT HORN BUTTON ASSY

(a) With the horn button assy installed on the vehicle, perform a visual check. If there are any defects as mentioned below, replace the horn button assy with a new one:
Cuts, minute cracks or marked discoloration on the horn button assy top surface or in the grooved portion.

(b) Make sure that the horn sounds.

HINT:
If the horn does not sound, inspect the horn system (see page 69−3).

9. INSPECT SRS WARNING LIGHT (See page 05−1456)

600Y5−01

DISPOSAL

HINT:

- There are two types of horn button assy:
  One is used with 3−spoke steering wheel assy and the other is used with 4−spoke steering wheel assy.
- The procedures listed below are for the 4−spoke steering wheel assy.
- When scrapping a vehicle equipped with the SRS or disposing of the horn button assy, be sure to deploy the airbag first in accordance with the procedure described below. If any abnormality occurs with the airbag deployment, contact the SERVICE DEPT. of TOYOTA MOTOR SALES, U.S.A., INC.

CAUTION:

- **Never dispose of a horn button assy which has an undeployed airbag.**
- **The airbag produces an exploding sound when it is deployed, so perform the operation outdoors and where it will not create a nuisance to nearby residents.**

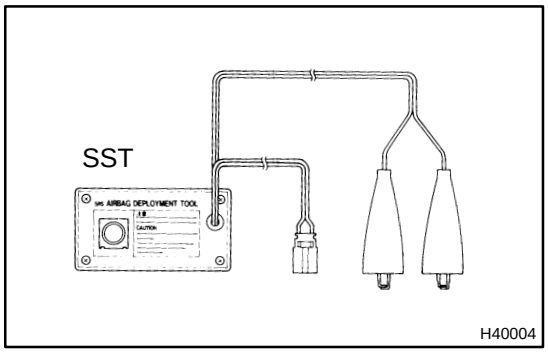

- **When deploying the airbag, always use the specified SST (SRS Airbag Deployment Tool). Perform the operation in a place away from electrical noise.**
- **When deploying an airbag, perform the operation at least 10 m (33 ft) away from the horn button assy.**
- **The horn button assy becomes extremely hot when the airbag is deployed, so do not touch it for at least 30 minutes after deployment.**
- **Use gloves and safety glasses when handling a horn button assy with a deployed airbag.**
- **Do not apply water, etc. to a horn button assy with the deployed airbag.**
- **Always wash your hands with water after completing the operation.**

1. DISPOSE OF HORN BUTTON ASSY (WHEN INSTALLED IN VEHICLE)

HINT:

Prepare a battery as the power source to deploy the airbag.

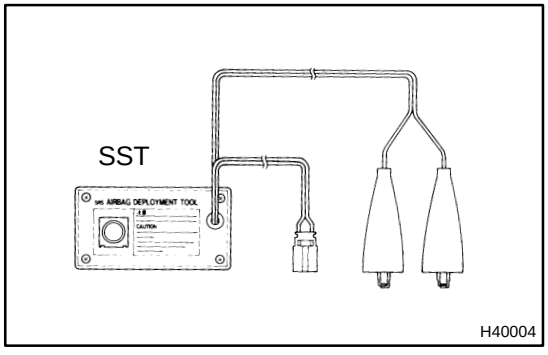

(a) Check function of the SST.
SST 09082−00700

CAUTION:

When deploying the airbag, always use the specified SST: SRS Airbag Deployment Tool.

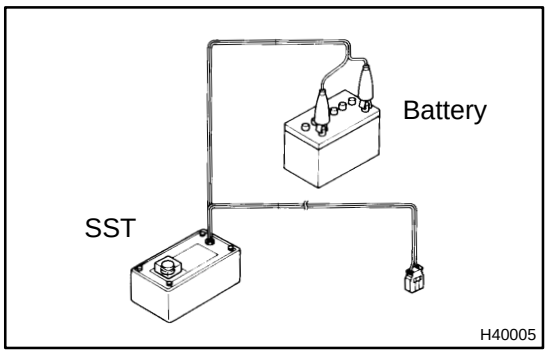

(1) Connect the SST to the battery.
Connect the red clip of the SST to the battery positive (+) terminal and the black clip of the SST to the battery negative (−) terminal.

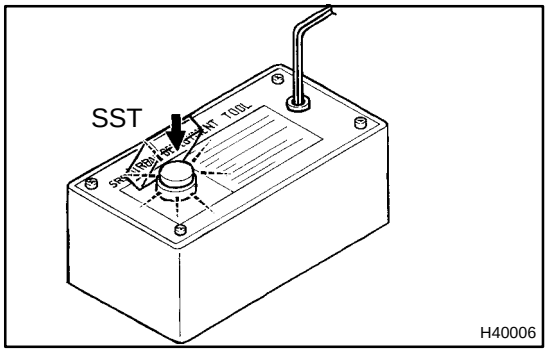

(2) Check function of the SST.
Press the SST activation switch, and check that the LED of the SST activation switch comes on.

CAUTION:

- **Do not connect the SST connector (yellow colored one) to the airbag.**
- **If the LED comes on when the activation switch is not being pressed, SST malfunction is possible, so replace the SST with a new one.**

(3) Disconnect the SST from the battery.

(b) Precaution (see page 60−1).

(c) Disconnect the battery negative terminal.

CAUTION:

After removing the terminal, wait for at least 90 seconds before starting the operation.

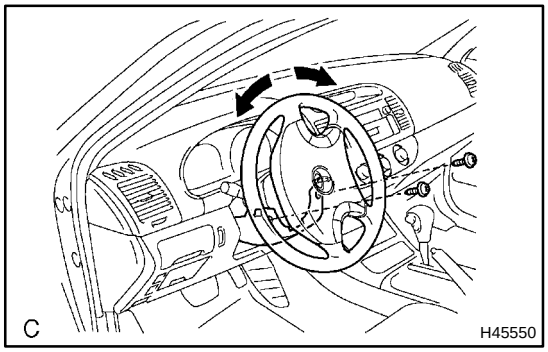

(d) Remove the steering column cover (lower).

(1) While turning the steering wheel assy to the right and left, remove the 2 screws and steering column cover (lower).

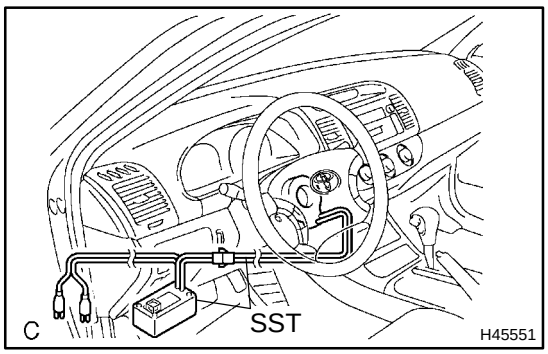

(e) Install the SST.

CAUTION:

Check that there is no looseness in the steering wheel assy and horn button assy.

(1) Disconnect the airbag connector (yellow colored one) from the spiral cable sub−assy.

NOTICE:

When handling the airbag connector, take care not to damage the airbag wire harness.

(2) Connect the SST connector to the airbag connector of the spiral cable sub−assy.

SST 09082−00700, 09082−00780

NOTICE:

To avoid damaging the SST connector and wire harness, do not lock the secondary lock of the twin lock.

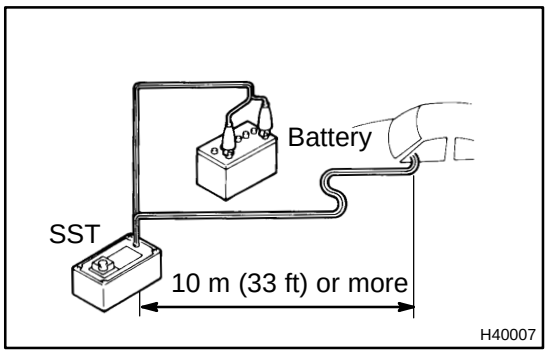

(3) Move the SST at least 10 m (33 ft) away from the vehicle front side window.
(4) Maintaining enough clearance for the SST wire harness in the front side window, close all doors and windows of the vehicle.

NOTICE:

Take care not to damage the SST wire harness.

(5) Connect the red clip of the SST to the battery positive (+) terminal and the black clip of the SST to the negative (−) terminal.

(f) Deploy the airbag.

(1) Check that no one is inside the vehicle or within a 10 m (33 ft) radius of the vehicle.
(2) Press the SST activation switch and deploy the airbag.

CAUTION:

- **When deploying the airbag, make sure that no one is near the vehicle.**
- **The horn button assy becomes extremely hot when the airbag is deployed, so do not touch it for at least 30 minutes after deployment.**
- **Use gloves and safety glasses when handling a horn button assy with a deployed airbag.**
- **Do not apply water, etc. to a horn button assy with a deployed airbag.**
- **Always wash your hands with water after completing the operation.**

HINT:

The airbag is deployed as the LED of the SST activation switch comes on.

2. DISPOSE OF HORN BUTTON ASSY (WHEN NOT INSTALLED IN VEHICLE)

NOTICE:

- **When disposing of the horn button assy, never use the customer's vehicle to deploy the airbag.**
- **Be sure to follow the procedure detailed below when deploying the airbag.**

HINT:

Prepare a battery as the power source to deploy the airbag.

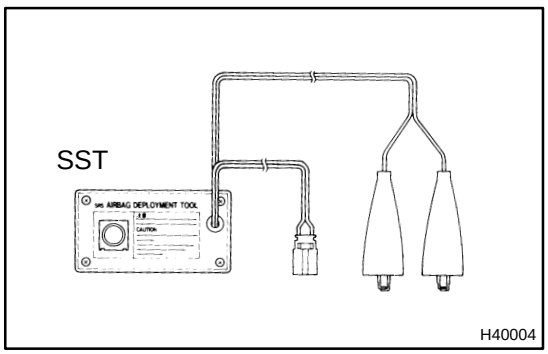

(a) Check the function of the SST (see step 1−(a)).
(b) Remove the horn button assy (See page 60−25).

CAUTION:

- **When removing the horn button assy, work must be started 90 seconds after the ignition switch is turned to the "LOCK" position and the negative (−) terminal cable is disconnected from the battery.**
- **When storing the horn button assy, keep the airbag deployment side facing upward.**

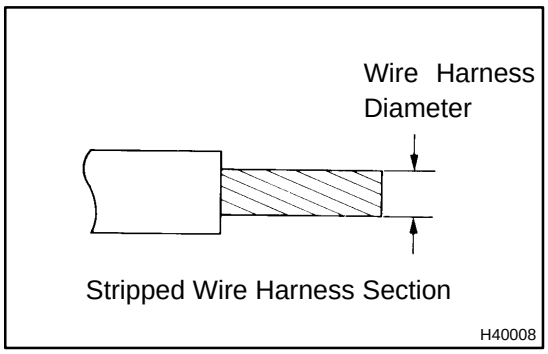

(c) Using a service−purpose wire harness for the vehicle, tie down the horn button assy to the disc wheel.

Wire harness: Stripped wire harness section 1.25 mm^2 or more (0.0019 in.^{2} or more)

CAUTION:

If the wire harness is too thin or an alternative object is used to tie down the horn button assy, it may be snapped by the shock when the airbag is deployed. Always use a wire harness for vehicle use with an area of at least 1.25 mm^2 (0.0019 in.^{2}).

HINT:

To calculate the area of the stripped wire harness section:

Area = 3.14 x (Diameter)^2 divided by 4

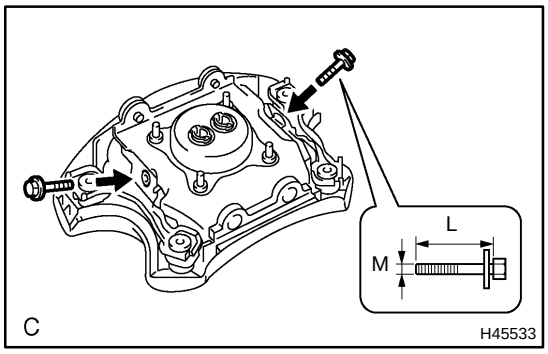

(1) Install the 2 bolts with washers into the 2 bolt holes on the horn button assy.

Bolt:

L: 35.0 mm (1.387 in.)

M: 6.0 mm (0.236 in.)

Pitch: 1.0 mm (0.039 in.)

NOTICE:

- **Tighten the bolts by hand until they become difficult to turn.**
- **Do not tighten the bolts excessively.**

(2) After connecting the SST below to each other, connect them to the horn button assy.

SST 09082−00802 (09082−10801, 09082−30801)

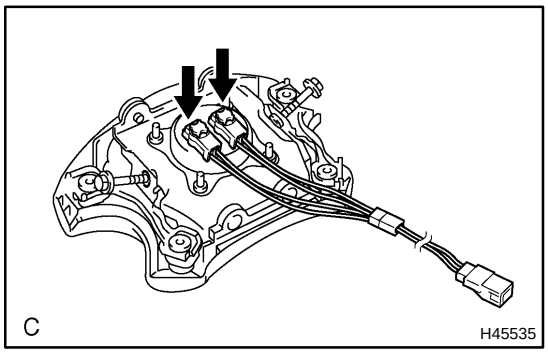

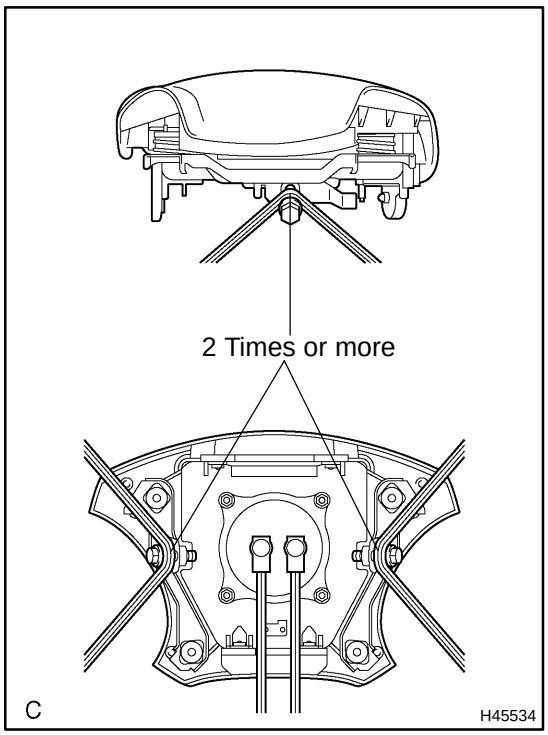

(3) Using 3 wire harnesses, wind wire harness at least 2 times each around the bolts installed on the left and right sides of the horn button assy.

CAUTION:

- **Tightly wind the wire harness around the bolts so that there is no slack.**
- **Make sure that the wire harness is tight. If there is slack in wire harness, the horn button assy may become loose due to the shock when the airbag is deployed.**

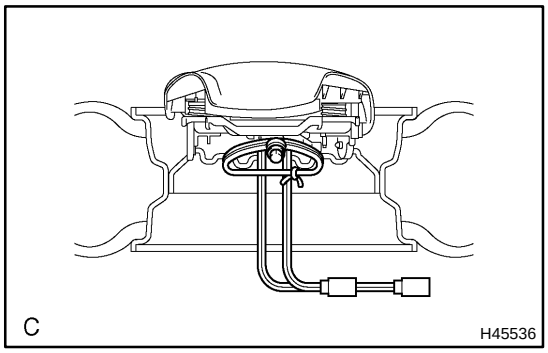

(4) Face the airbag deployment side of the horn button assy upward. Separately tie the left and right sides of the horn button assy to the disc wheel through the hub nut holes. Position the SST connector so that it hangs downward through the hub hole in the disc wheel.

CAUTION:

- **Make sure that the wire harness is tight. If there is slack in wire harness, the horn button assy may become loose due to the shock when the airbag is deployed.**
- **Always tie down the horn button assy with the airbag deployment side facing upward.**

NOTICE:

The disc wheel will be marked by the airbag deployment, so use an extra disc wheel.

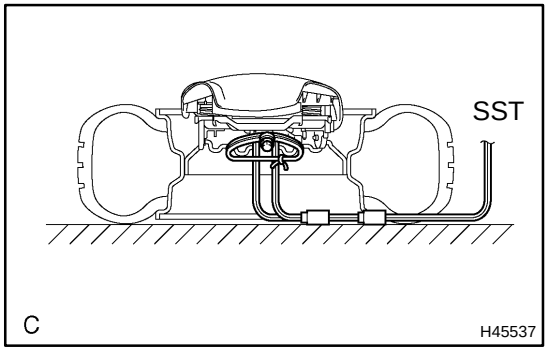

(d) Install the SST.
SST 09082−00700

CAUTION:

Place the disc wheel on level ground.

(1) Connect the connector of the SST.

NOTICE:

To avoid damaging the SST connector and wire harness, do not lock the secondary lock of the twin lock. Also, secure some slack for the SST wire harness inside the disc wheel.

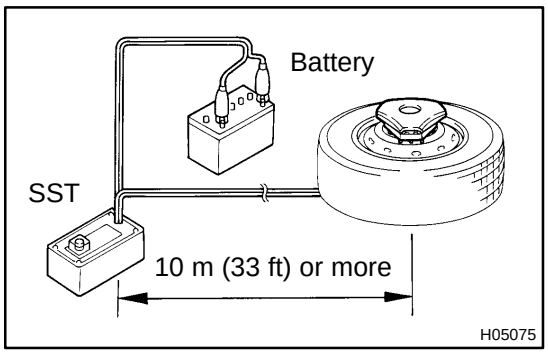

(2) Move the SST to at least 10 m (33 ft) away from the horn button assy tied down to the disc wheel.

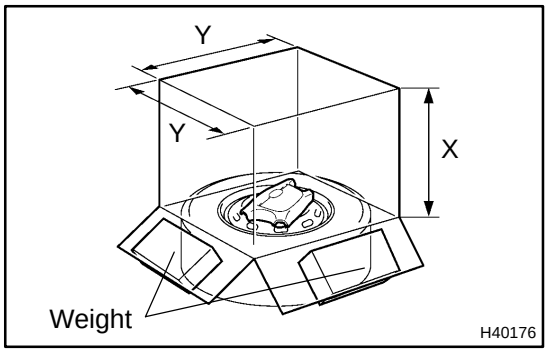

(e) Cover the horn button assy with a cardboard box or tires.

(1) Covering method using a cardboard box:
Cover the horn button assy with the cardboard box and place weights on the cardboard box in 4 places totalling at least 190 N (20 kg, 44 lb).

Size of cardboard box:
Must exceed the following dimensions:
X = 460 mm (18.11 in.)
Y = 650 mm (25.59 in.)

NOTICE:

- **When the dimension Y of the cardboard box exceeds the diameter of the disc wheel with tire which the horn button assy is tied to, X should be the following size.**
  X = 460 mm (18.11 in.) + width of tire
- **If a cardboard box which is smaller than the specified size is used, the cardboard box will be broken by the shock from the airbag deployment.**

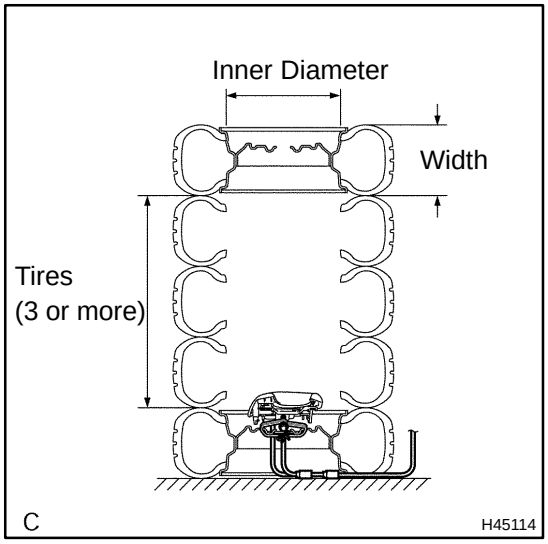

(2) Covering method using tires:
Place at least 3 tires without disc wheels on the tire with disc wheel which the horn button assy is tied to. Place the tire with disc wheel on them.

Tire size: Must exceed the following dimensions
Width: 185 mm (7.28 in.)
Inner diameter: 360 mm (14.17 in.)

CAUTION:

Do not use tires with disc wheels except on the top and bottom.

NOTICE:

- **The tires may be marked by the airbag deployment, so use an extra tire.**
- **Do not place the SST connector under the tire because it could be damaged.**

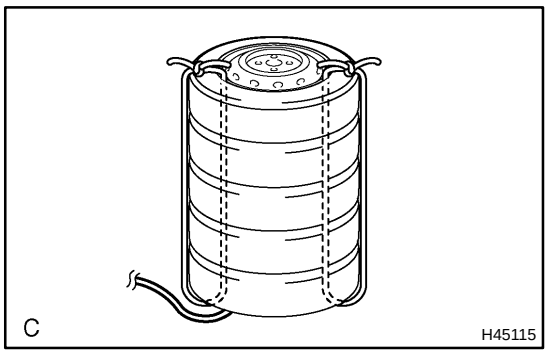

(3) Tie the tires together with 2 wire harnesses.

CAUTION:

Make sure that the wire harness is tight. Looseness in the wire harness results in the tires coming free due to the shock when the airbag is deployed.

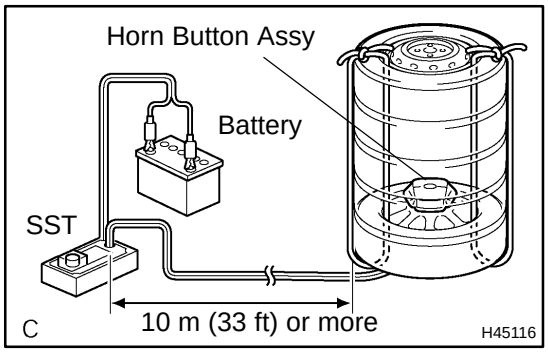

(f) Deploy the airbag.

(1) Connect the red clip of the SST to the battery positive (+) terminal and the black clip of the SST to the battery negative (−) terminal.

(2) Check that no one is within a 10 m (33 ft) radius of the disc wheel which the horn button assy is tied to.

(3) Press the SST activation switch and deploy the airbag.

CAUTION:

When deploying the airbag, make sure that no one is near the tire.

HINT:

The airbag is deployed as the LED of the SST activation switch comes on.

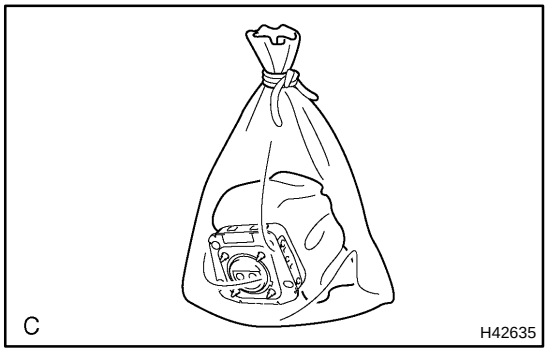

(g) Dispose of the horn button assy.

CAUTION:

- **The horn button assy becomes extremely hot when the airbag is deployed, so do not touch it for at least 30 minutes after deployment.**
- **Use gloves and safety glasses when handling a horn button assy with a deployed airbag.**
- **Do not apply water, etc. to a horn button assy with a deployed airbag.**
- **Always wash your hands with water after completing the operation.**

(1) Remove the horn button assy from the disc wheel.

(2) Place the horn button assy in a plastic bag, tie it tightly and dispose of it as other general part disposal.

SPIRAL CABLE SUB−ASSY

600DZ−02

REPLACEMENT

HINT:

- COMPONENTS: See page 60−23
- Installation is in the reverse order of removal.

1. PRECAUTION (See page 60−1)

2. DISCONNECT BATTERY NEGATIVE TERMINAL

CAUTION:

After removing the terminal, wait for at least 90 seconds before starting the operation.

3. PLACE FRONT WHEELS FACING STRAIGHT AHEAD

4. REMOVE STEERING WHEEL COVER LOWER NO.2 (See page 60−25)

5. REMOVE STEERING WHEEL COVER LOWER NO.3 (See page 60−25)

6. REMOVE HORN BUTTON ASSY (See page 60−25)

7. REMOVE STEERING WHEEL ASSY (See page 50−9)

SST 09950−50013 (09951−05010, 09952−05010, 09953−05020, 09954−05021)

8. REMOVE STEERING COLUMN COVER (LOWER) (See page 50−9)

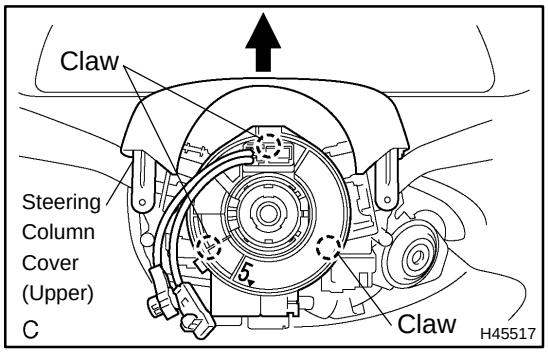

9. REMOVE SPIRAL CABLE SUB−ASSY

(a) Raise the steering column cover (upper).

(b) Disconnect the connectors from the spiral cable sub−assy.

CAUTION:

When handling the airbag connector, take care not to damage the airbag wire harness.

(c) Disengage the 3 claws and remove the spiral cable sub−assy.

10. REMOVE STEERING SENSOR (W/ VSC) (See page 32−72)

11. INSPECT SPIRAL CABLE SUB−ASSY

(a) If any of the following conditions occur, replace the spiral cable sub−assy with a new one.

Condition:

Scratches or cracks on the connector

Cracks, dents or chipping of the spiral cable sub−assy

12. INSTALL STEERING SENSOR (W/ VSC) (See page 32−72)

13. INSTALL SPIRAL CABLE SUB−ASSY

(a) Check that the front wheels are facing straight ahead.

(b) Set the turn signal switch to the neutral position.

NOTICE:

Make sure that the turn signal switch is in the neutral position, or the pin of the turn signal switch may be snapped.

(c) Install the spiral cable sub−assy.

NOTICE:

When replacing the spiral cable sub−assy with a new one, remove the lock pin before installing the steering wheel assy.

(d) Connect the connector to the spiral cable sub−assy.

NOTICE:

When handling the airbag connector, take care not to damage the airbag wire harness.

14. INSTALL STEERING COLUMN COVER (LOWER) (See page 50−9)

15. ADJUST SPIRAL CABLE SUB−ASSY

(a) Check that the ignition switch is off.

(b) Check that the battery negative (−) terminal is disconnected.

NOTICE:

After removing the terminal, wait for at least 90 seconds before starting the operation.

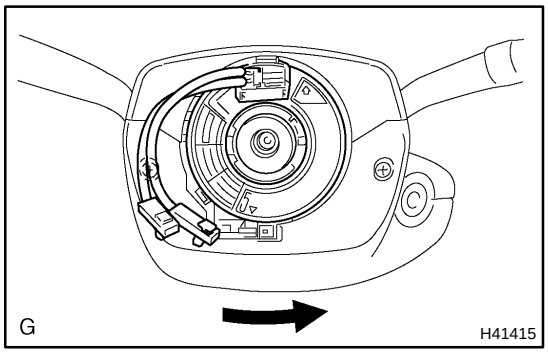

(c) Rotate the spiral cable sub−assy counterclockwise slowly by hand until it feels firm.

NOTICE:

Do not turn the spiral cable sub−assy by the airbag wire harness.

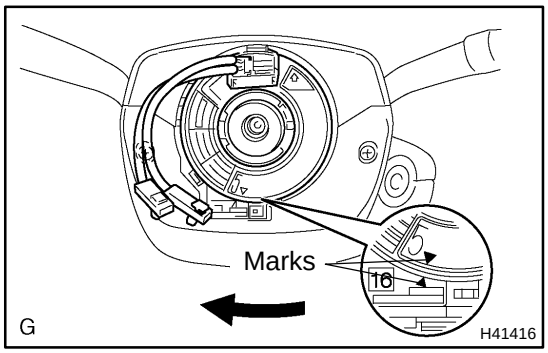

(d) Rotate the spiral cable sub−assy clockwise approximately 2.5 turns to align the marks.

NOTICE:

Do not turn the spiral cable sub−assy by the airbag wire harness.

HINT:

The spiral cable sub−assy will rotate approximately 2.5 turns to both the left and right from the center.

16. INSTALL STEERING WHEEL ASSY (See page 50−9)

17. INSPECT STEERING WHEEL CENTER POINT

18. INSTALL HORN BUTTON ASSY (See page 60−25)

19. CONNECT BATTERY NEGATIVE TERMINAL

20. INSPECT HORN BUTTON ASSY (See page 69−3)

21. INSPECT SRS WARNING LIGHT (See page 05−1456)

FRONT PASSENGER AIRBAG ASSY (From July, 2003)

600ON−01

COMPONENTS

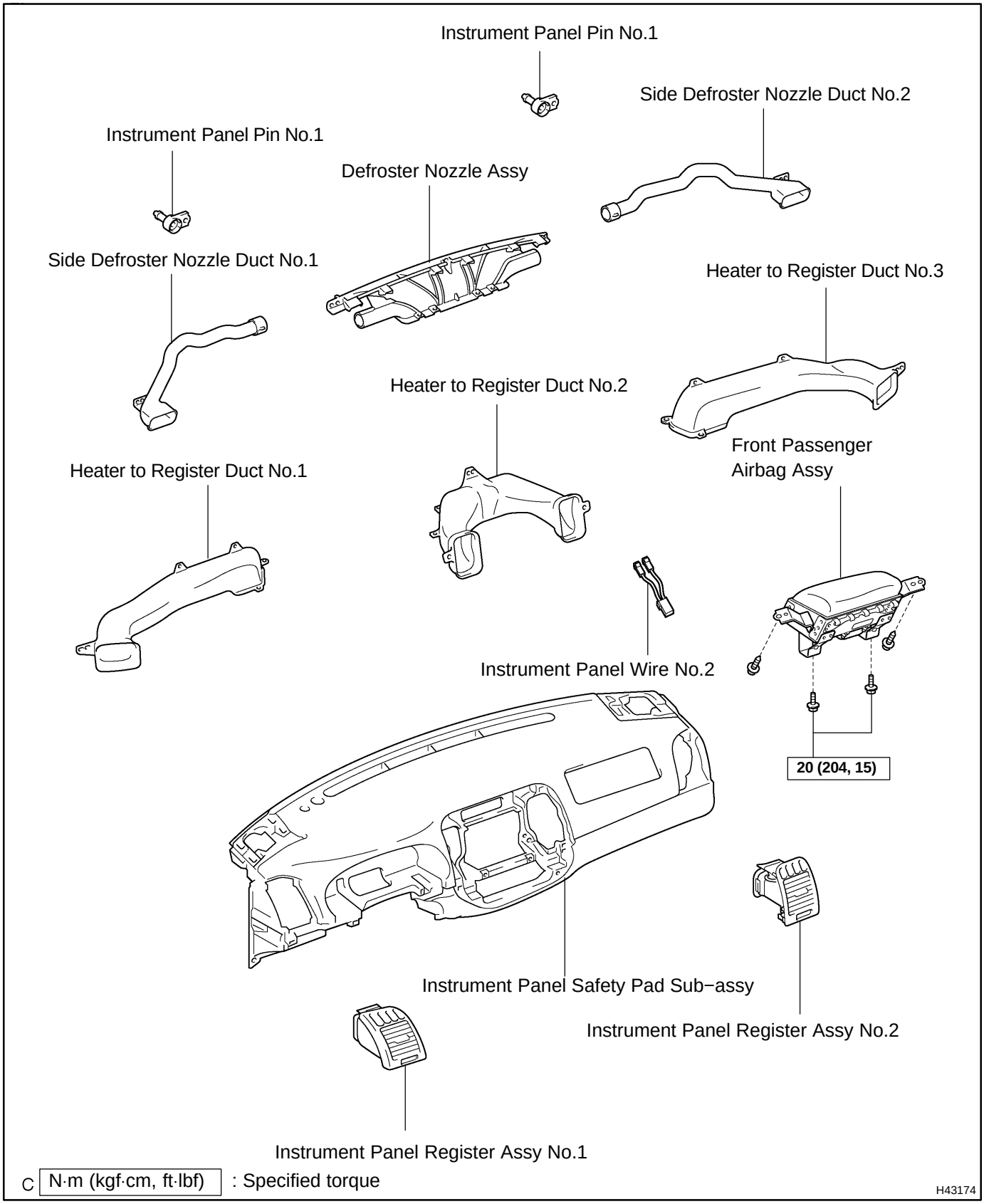

600OO−02

REPLACEMENT

HINT:

Installation is in the reverse order of removal.

1. **PRECAUTION (See page 60−1)**
2. **DISCONNECT BATTERY NEGATIVE TERMINAL**
3. **PLACE FRONT WHEELS FACING STRAIGHT AHEAD**
4. **REMOVE STEERING WHEEL COVER LOWER NO.2**
5. **REMOVE STEERING WHEEL COVER LOWER NO.2 (W/O STEERING PAD SWITCH 4 SPOKE STEERING WHEEL)**
6. **REMOVE STEERING WHEEL COVER LOWER NO.3 (3 SPOKE STEERING WHEEL ASSY)**
7. **REMOVE CONNECTOR COVER (W/ STEERING PAD SWITCH 4 SPOKE STEERING WHEEL)**
8. **REMOVE HORN BUTTON ASSY (See page 60−25)**
9. **REMOVE STEERING WHEEL ASSY (See page 50−9)**
   SST 09950−50013 (09951−05010, 09952−05010, 09953−05020, 09954−05021)
10. **REMOVE STEERING COLUMN COVER (See page 50−9)**

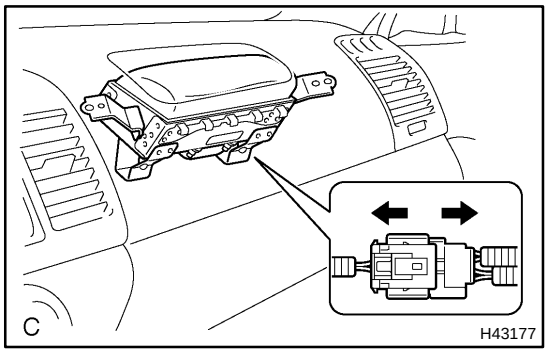

11. **DISCONNECT FRONT PASSENGER AIRBAG ASSY CONNECTOR**

(a) Disconnect the connector.

NOTICE:

When handling the airbag connector, take care not to damage the airbag wire harness.

12. **REMOVE INSTRUMENT PANEL SAFETY PAD SUB−ASSY (See page 71−16)**
13. **REMOVE INSTRUMENT PANEL REGISTER ASSY NO.2 (See page 71−16)**
14. **REMOVE INSTRUMENT PANEL REGISTER ASSY NO.1 (See page 71−16)**
15. **REMOVE SIDE DEFROSTER NOZZLE DUCT NO.2 (See page 71−16)**
16. **REMOVE SIDE DEFROSTER NOZZLE DUCT NO.1 (See page 71−16)**
17. **REMOVE DEFROSTER NOZZLE ASSY (See page 71−16)**
18. **REMOVE HEATER TO REGISTER DUCT NO.1 (See page 71−16)**
19. **REMOVE HEATER TO REGISTER DUCT NO.3 (See page 71−16)**
20. **REMOVE HEATER TO REGISTER DUCT NO.2 (See page 71−16)**

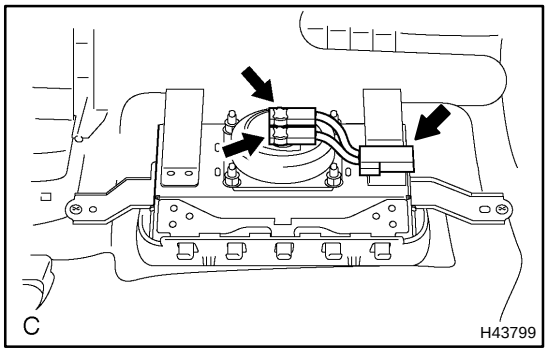

21. **DISCONNECT INSTRUMENT PANEL WIRE NO.2**

(a) Remove the clip.

(b) Disconnect the connectors from the front passenger airbag assy.

NOTICE:

When handling the airbag connector, take care not to damage the airbag wire harness.

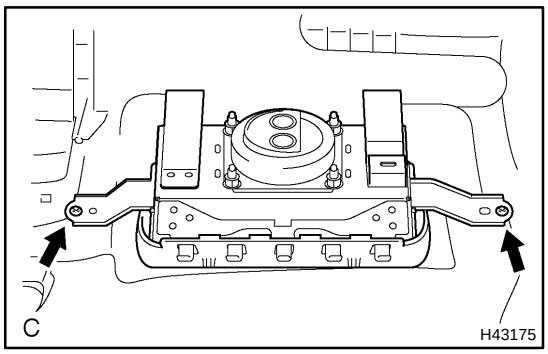

22. REMOVE FRONT PASSENGER AIRBAG ASSY

(a) Remove the 2 screws.

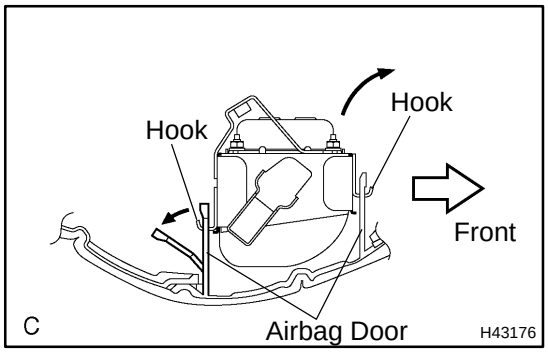

(b) Release the rear side wall of the airbag door from the hook by slightly deflecting it and roll the front passenger airbag assy forward.

(c) Release the front side wall of the airbag door from the other hook and remove the front passenger airbag assy.

23. INSTALL FRONT PASSENGER AIRBAG ASSY

24. INSPECT FRONT PASSENGER AIRBAG ASSY (See page 60−17)

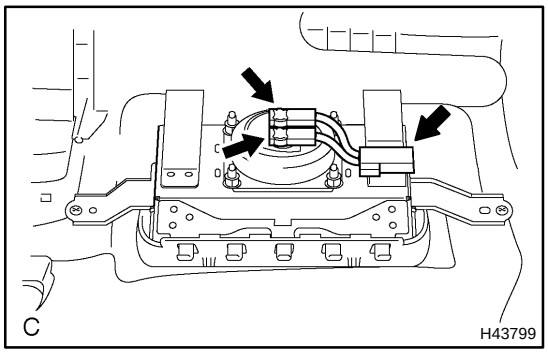

25. CONNECT INSTRUMENT PANEL WIRE NO.2

(a) Connect the connectors to the front passenger airbag assy.

NOTICE:

When handling the airbag connector, take care not to damage the airbag wire harness.

(b) Install the clip.

26. INSTALL INSTRUMENT PANEL SAFETY PAD SUB−ASSY (See page 71−16)

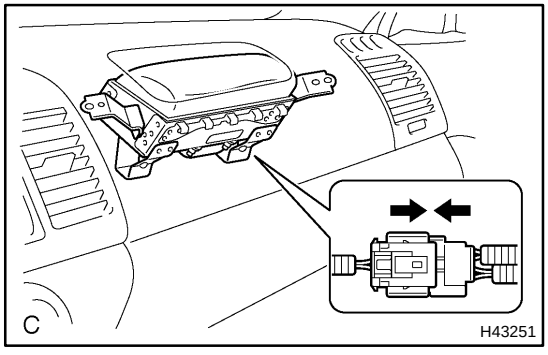

27. CONNECT FRONT PASSENGER AIRBAG ASSY CONNECTOR

(a) Connect the connector.

NOTICE:

When handling the airbag connector, take care not to damage the airbag wire harness.

28. **INSTALL SPIRAL CABLE SUB−ASSY (See page 60−34)**
29. **ADJUST SPIRAL CABLE SUB−ASSY (See page 60−34)**
30. **INSTALL STEERING WHEEL ASSY (See page 50−9)**
31. **INSPECT STEERING WHEEL CENTER POINT**
32. **INSTALL HORN BUTTON ASSY (See page 60−25)**
33. **INSPECT HORN BUTTON ASSY (See page 60−25)**
34. **INSPECT SRS WARNING LIGHT (See page 05−1456)**

600OP−02

DISPOSAL

HINT:

When scrapping a vehicle equipped with SRS or disposing of the front passenger airbag assy, be sure to deploy the airbag first in accordance with the procedure described below. If any abnormality occurs with the airbag deployment, contact the SERVICE DEPT. of TOYOTA MOTOR SALES, U.S.A., INC.

CAUTION:

- **Never dispose of the front passenger airbag assy that has an undeployed airbag.**
- **The airbag produces an exploding sound when it is deployed, so perform the operation outdoors and where it will not create a nuisance to nearby residents.**

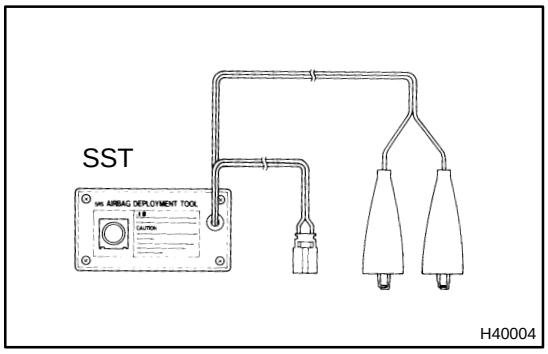

- **When deploying the airbag, always use the specified SST (SRS Airbag Deployment Tool). Perform the operation in a place away from electrical noise.**
- **When deploying the airbag, perform the operation at least 10 m (33 ft) away from the front passenger airbag assy.**
- **The front passenger airbag assy is extremely hot when the airbag is deployed, so do not touch it for at least 30 minutes after deployment.**
- **Use gloves and safety glasses when handling the front passenger airbag assy with the deployed airbag.**
- **Do not apply water, etc. to the front passenger airbag assy with the deployed airbag.**
- **Always wash your hands with water after completing the operation.**

1. DISPOSE OF FRONT PASSENGER AIRBAG ASSY (WHEN INSTALLED IN VEHICLE)

HINT:

Prepare a battery as the power source to deploy the airbag.

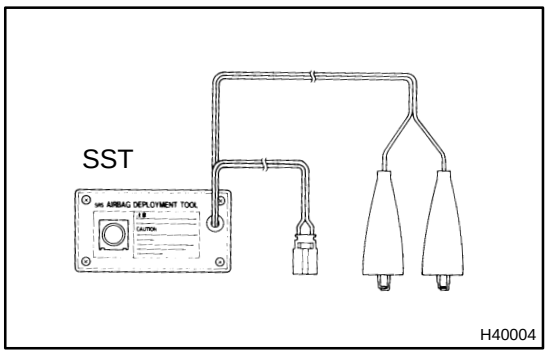

(a) Check the function of the SST (See step 1−(a) on page 60−27).

(b) Precaution (See page 60−1).

(c) Disconnect the battery negative terminal.

(d) Remove the front scuff plate (See page 76−22).

(e) Remove the cowl side trim sub−assy (See page 76−22).

(f) Remove the instrument panel under cover sub−assy No.1 (See page 71−16).

(g) Remove the glove compartment door pad (See page 71−16).

(h) Remove the instrument panel sub−assy lower (See page 71−16).

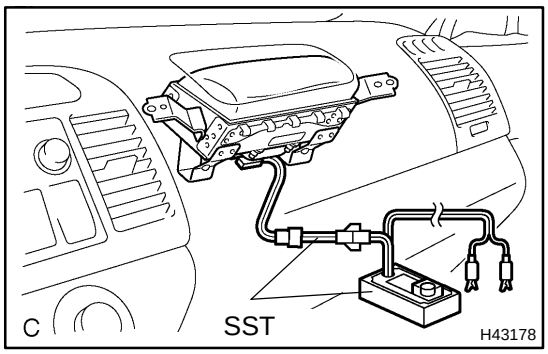

(i) Install the SST.
   (1) Disconnect the connectors from the front passenger airbag assy.

NOTICE:

When handling the airbag connector, take care not to damage the airbag wire harness.

   (2) Connect the connector of the SST to the front passenger airbag assy.

SST 09082−00700, 09082−00780

NOTICE:

To avoid damaging the SST connector and wire harness, do not lock the secondary lock of the twin lock.

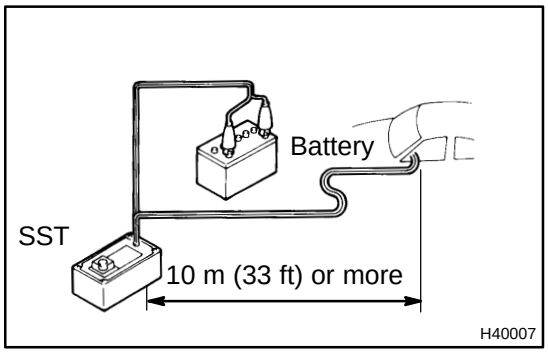

   (3) Move the SST at least 10 m (33 ft) away from the vehicle front side window.
   (4) Maintaining enough clearance for the SST wire harness in the front side window, close all doors and windows of the vehicle.

NOTICE:

Take care not to damage the SST wire harness.

   (5) Connect the red clip of the SST to the battery positive (+) terminal and the black clip of the SST to the negative (−) terminal.

(j) Deploy the airbag.
   (1) Check that no one is inside the vehicle or within a 10 m (33 ft) radius of the vehicle.
   (2) Press the activation switch of the SST and deploy the airbag.

HINT:

The airbag is deployed as the LED of the SST activation switch comes on.

CAUTION:

- **The front passenger airbag assy is extremely hot when the airbag is deployed, so do not touch it for at least 30 minutes after deployment.**
- **Use gloves and safety glasses when handling the front passenger airbag assy with the deployed airbag.**
- **Do not apply water, etc. to the front passenger airbag assy with the deployed airbag.**
- **Always wash your hands with water after completing the operation.**

2. DISPOSE OF FRONT PASSENGER AIRBAG ASSY (WHEN NOT INSTALLED IN VEHICLE)

NOTICE:

- **When disposing of the front passenger airbag assy, never use the customer's vehicle to deploy the airbag.**
- **Be sure to follow the procedure detailed below when deploying the airbag.**

HINT:

Prepare a battery as the power source to deploy the airbag.

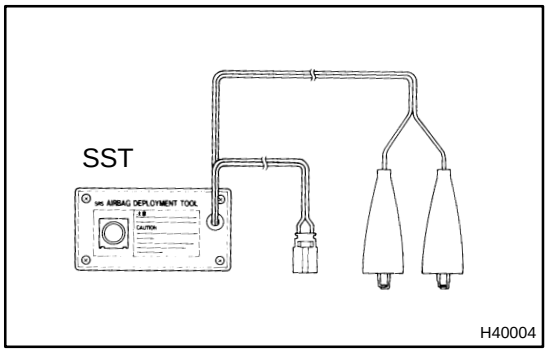

(a) Check the function of the SST (See step 1−(a) on page 60−27).

(b) Remove the front passenger airbag assy.

CAUTION:

- **When removing the front passenger airbag assy, work must be started 90 seconds after the ignition switch is turned to the "LOCK" position and the negative (−) terminal cable is disconnected from the battery.**
- **When storing the front passenger airbag assy, keep the upper surface of the airbag deployment side facing upward.**

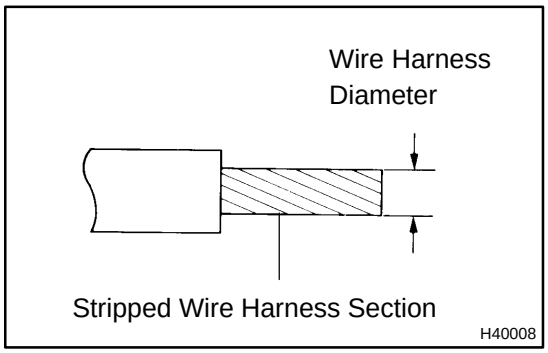

(c) Using a service−purpose wire harness for the vehicle, tie down the front passenger airbag assy to the tire.

Wire harness: Stripped wire harness section 1.25 mm^2 or more (0.0019 $in.^2$ or more)

CAUTION:

If a wire harness which is too thin or an alternative object is used to tie down the front passenger airbag assy, it may be snapped by the shock when the airbag is deployed. This is highly dangerous. Always use a wire harness for vehicle use which has a section of at least 1.25 mm^2 (0.0019 $in.^2$).

HINT:

- To calculate the square of the stripped wire harness section:

  Square = 3.14 x $(Diameter)^2$ divided by 4
- Position the front passenger airbag assy inside the tire with the airbag deployment side facing inside.

  Tire size: Must exceed the following dimensions
  Width: 185 mm (7.28 in.)
  Inner diameter: 360 mm (14.17 in.)

CAUTION:

- **Make sure that the wire harness is tight. It is highly dangerous when looseness in the wire harness results in the front passenger airbag assy coming free due to the shock from the airbag deployment.**

- **Always tie down the front passenger airbag assy with the airbag deployment side facing inside the tire.**

NOTICE:
The tire will be marked by the airbag deployment, so use a redundant tire.

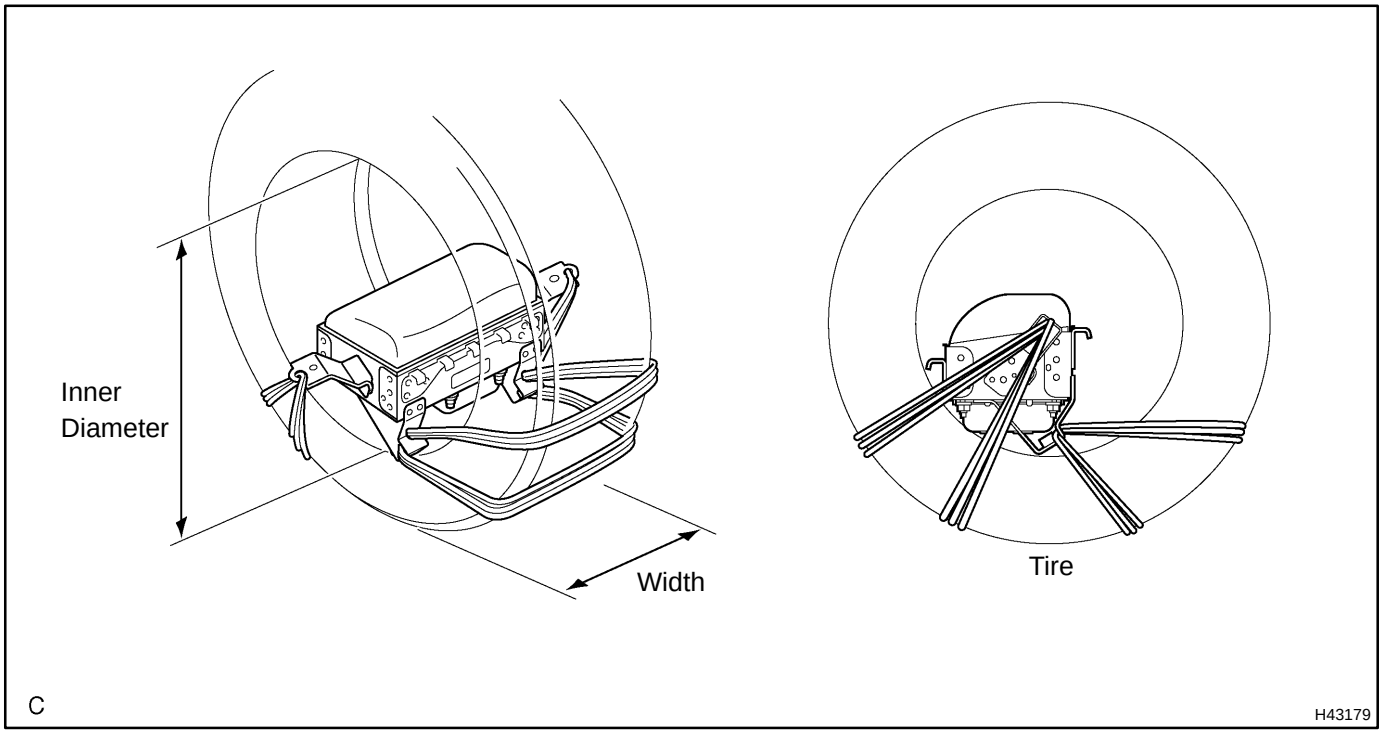

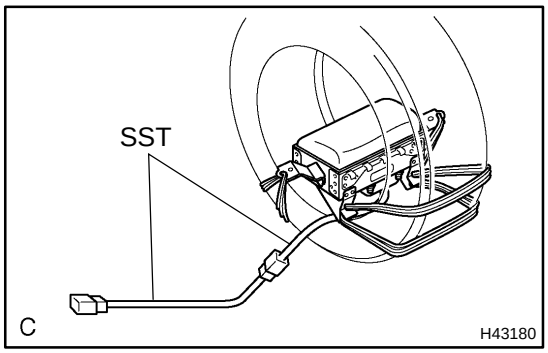

(d) Install the SST.
After connecting the SST below to each other, connect them to the front passenger airbag assy.
SST 09082−00802 (09082−10801, 09082−30801)

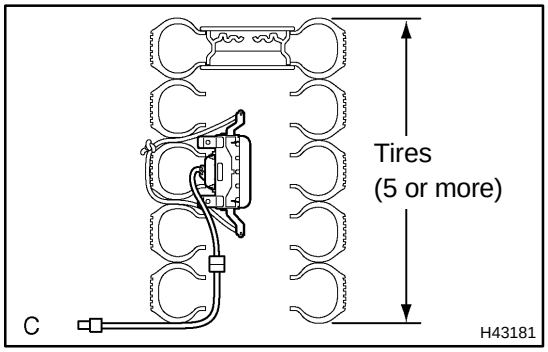

(e) Place the tires.
(1) Place at least 2 tires under the tire to which the front passenger airbag assy is tied.
(2) Place at least 2 tires over the tire to which the front passenger airbag assy is tied. The top tire should have the disc wheel installed.

NOTICE:
Do not place the SST connector under the tire because the SST connector could be damaged.

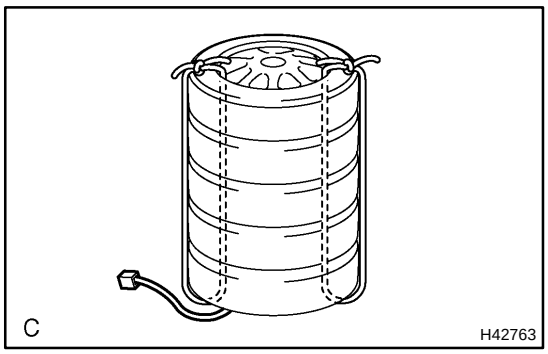

(3) Tie the tires together with 2 wire harnesses.

CAUTION:

Make sure that the wire harness is tight. It is very dangerous when looseness in the wire harness results in the tires coming free due to the shock from the airbag deployment.

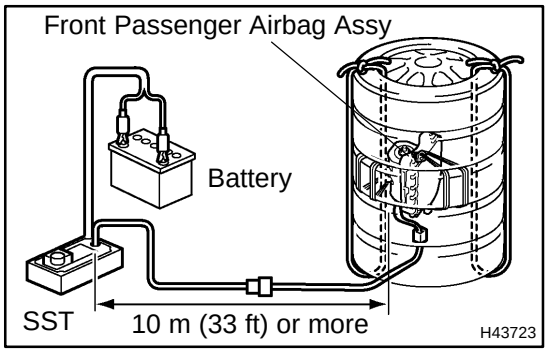

(f) Install the SST.

Connect the connector of the SST.

SST 09082−00700

NOTICE:

To avoid damaging the SST connector and wire harness, do not lock the secondary lock of the twin lock. Also, secure some slack for the SST wire harness inside the tire.

(g) Deploy the airbag.

(1) Connect the red clip of the SST to the battery positive (+) terminal and the black clip of the SST to the battery negative (−) terminal.

(2) Check that no one is within a 10 m (33 ft) radius of the tire to which the front passenger airbag assy is tied.

(3) Press the activation switch of the SST and deploy the airbag.

HINT:

The airbag is deployed as the LED of the SST activation switch comes on.

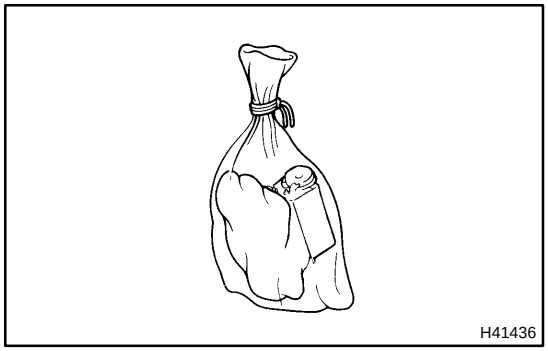

(h) Dispose of the front passenger airbag assy.

CAUTION:

- **The front passenger airbag assy is extremely hot when the airbag is deployed, so do not touch it for at least 30 minutes after deployment.**
- **Use gloves and safety glasses when handling the front passenger airbag assy with the deployed airbag.**
- **Do not apply water, etc. to the front passenger airbag assy with the deployed airbag.**
- **Always wash your hands with water after completing the operation.**

(1) Remove the front passenger airbag assy from the tire.

(2) Place the front passenger airbag assy in a plastic bag, tie it tightly and dispose of it in the same way as for other general parts disposal.

CURTAIN SHIELD AIR BAG ASSY LH

60095−05

COMPONENTS

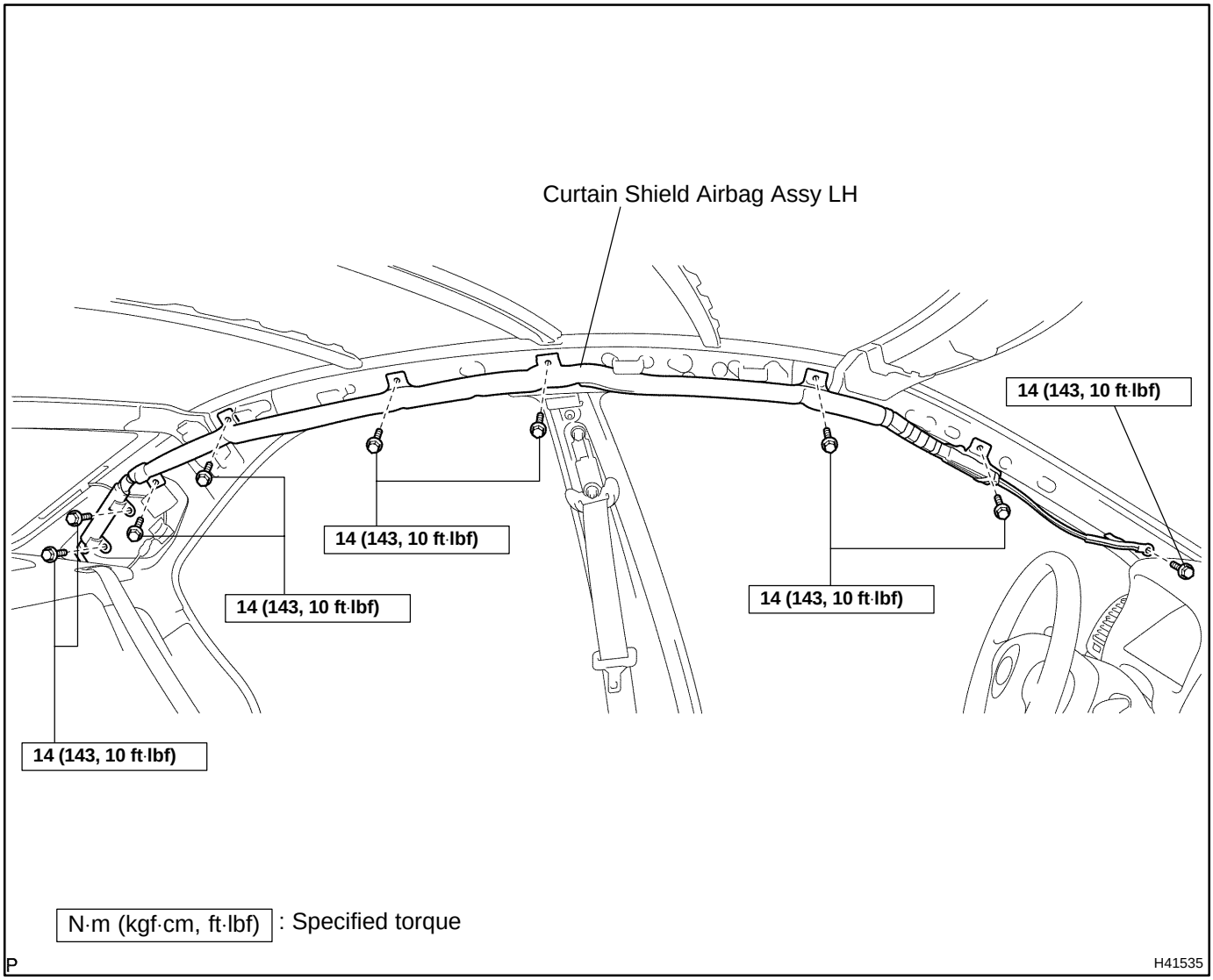

60096−08

REPLACEMENT

HINT:

- Replacement procedure of the RH side is the same as that for the LH side.
- Installation is in the reverse order of removal.

1. PRECAUTION (See page 60−1)

2. DISCONNECT BATTERY NEGATIVE TERMINAL

3. REMOVE ROOF HEADLINING ASSY (See page 76−22)

4. REMOVE CURTAIN SHIELD AIR BAG ASSY LH

(a) Disconnect the connector from the curtain shield airbag assy LH.

NOTICE:

When handling the airbag connector, take care not to damage the airbag wire harness.

(b) Remove the 9 bolts and curtain shield airbag assy LH.

HINT:

Remove the bolts from front side of the vehicle in order.

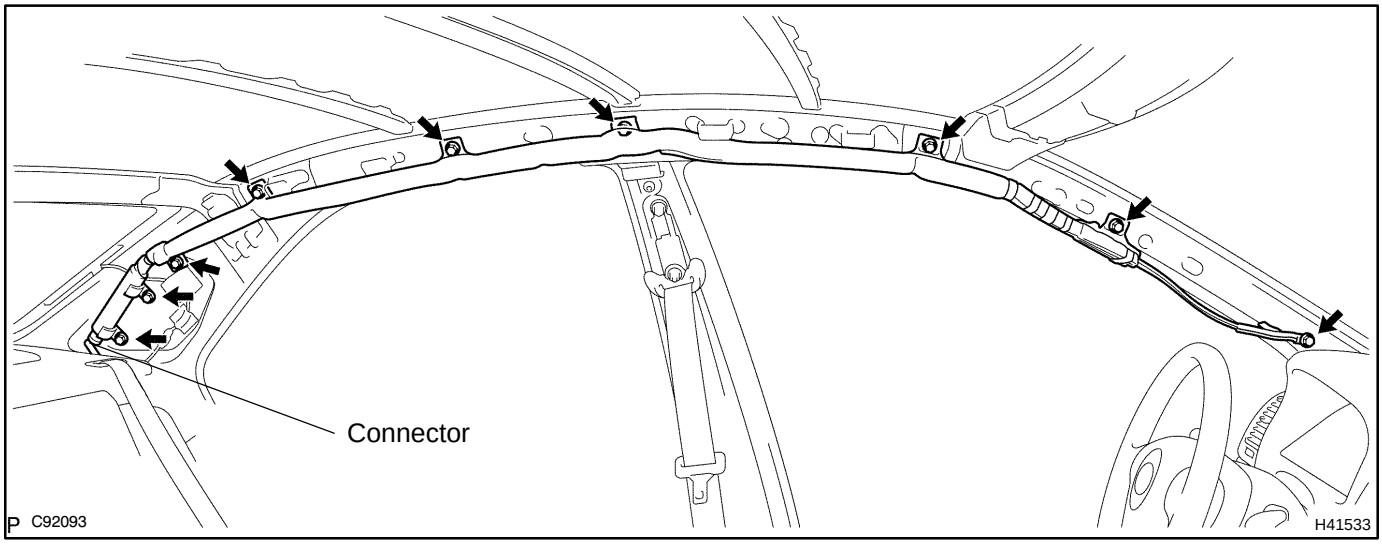

5. INSTALL CURTAIN SHIELD AIR BAG ASSY LH

(a) Install the curtain shield airbag assy LH with the 9 bolts.

Torque: 14 N·m (143 kgf·cm, 10 ft·lbf)

HINT:

Install the bolts from rear side of the vehicle in order.

(b) Connect the connector to the curtain shield airbag assy LH.

NOTICE:

When handling the airbag connector, take care not to damage the airbag wire harness.

6. INSPECT CURTAIN SHIELD AIR BAG ASSY LH (See page 60−17)

7. INSTALL ROOF HEADLINING ASSY (See page 76−22)

8. INSPECT SRS WARNING LIGHT (See page 05−1456)

600OQ−02

DISPOSAL

HINT:

- Disposal procedure of the RH side is the same as that for the LH side.
- When scrapping a vehicle equipped with SRS or disposing of the curtain shield airbag assy LH, be sure to deploy the airbag first in accordance with the procedure described below. If any abnormality occurs with the airbag deployment, contact the SERVICE DEPT. of TOYOTA MOTOR SALES, U.S.A., INC.

CAUTION:

- **Never dispose of the curtain shield airbag assy LH that has an undeployed airbag.**
- **The airbag produces an exploding sound when it is deployed, so perform the operation outdoors and where it will not create a nuisance to nearby residents.**

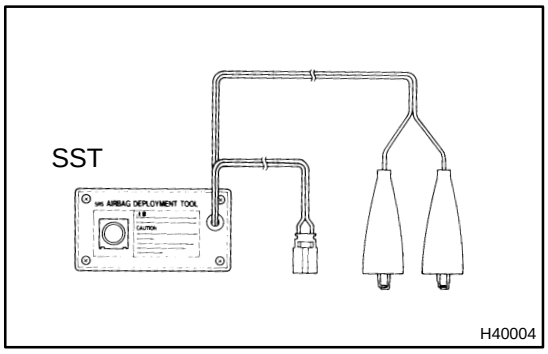

- **When deploying the airbag, always use the specified SST (SRS Airbag Deployment Tool). Perform the operation in a place away from electrical noise.**
- **When deploying the airbag, perform the operation at least 10 m (33 ft) away from the curtain shield airbag assy LH.**
- **The curtain shield airbag assy LH is extremely hot when the airbag is deployed, so do not touch it for at least 30 minutes after deployment.**
- **Use gloves and safety glasses when handling the curtain shield airbag assy LH with the deployed airbag.**
- **Do not apply water, etc. to the curtain shield airbag assy LH with the deployed airbag.**
- **Always wash your hands with water after completing the operation.**

1. DISPOSE OF CURTAIN SHIELD AIR BAG ASSY LH (WHEN INSTALLED IN VEHICLE)

HINT:

Prepare a battery as the power source to deploy the airbag.

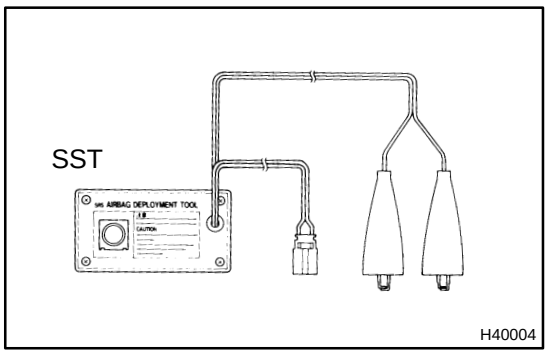

(a) Check the function of the SST (See step 1−(a) on page 60−27).
(b) Precaution (See page 60−1).
(c) Disconnect the battery negative terminal.
(d) Remove the rear door scuff plate LH (See page 76−22).
(e) Remove the rear door opening trim weatherstrip LH (See page 76−22).
(f) Remove the rear seat cushion assy (See page 72−32).
(g) Remove the rear side seat back LH (See page 72−32).
(h) Remove the roof side inner garnish LH (See page 76−22).

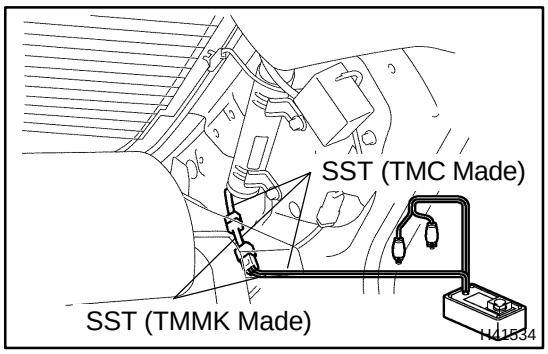

(i) Install the SST.

(1) Disconnect the connector from the curtain shield airbag assy LH.

NOTICE:

When handling the airbag connector, take care not to damage the airbag wire harness.

(2) TMC Made:

After connecting the SST below to each other, connect them to the curtain shield airbag assy LH.

SST 09082−00700, 09082−00802 (09082−10801, 09082−20801)

NOTICE:

To avoid damaging the SST connector and wire harness, do not lock the secondary lock of the twin lock.

(3) TMMK Made:

Connect the connector of the SST to the curtain shield airbag assy LH (TMMK Made).

SST 09082−00700, 09082−00760

NOTICE:

To avoid damaging the SST connector and wire harness, do not lock the secondary lock of the twin lock.

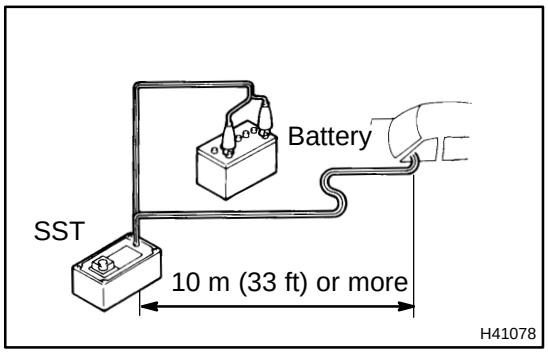

(4) Move the SST at least 10 m (33 ft) away from the vehicle rear side window.

(5) Maintaining enough clearance for the SST wire harness in the rear side window, close all doors and windows of the vehicle.

NOTICE:

Take care not to damage the SST wire harness.

(6) Connect the red clip of the SST to the battery positive (+) terminal and the black clip of the SST to the negative (−) terminal.

(j) Deploy the airbag.

(1) Check that no one is inside the vehicle or within a 10 m (33 ft) radius of the vehicle.

(2) Press the activation switch of the SST and deploy the airbag.

HINT:

The airbag is deployed as the LED of the SST activation switch comes on.

CAUTION:

- **The curtain shield airbag assy LH is extremely hot when the airbag is deployed, so do not touch it for at least 30 minutes after deployment.**
- **Use gloves and safety glasses when handling the curtain shield airbag assy LH with the deployed airbag.**

- **Do not apply water, etc. to the curtain shield airbag assy LH with the deployed airbag.**
- **Always wash your hands with water after completing the operation.**

2. DISPOSE OF CURTAIN SHIELD AIR BAG ASSY LH (WHEN NOT INSTALLED IN VEHICLE)

NOTICE:

- **When disposing of the curtain shield airbag assy LH, never use the customer's vehicle to deploy the airbag.**
- **Be sure to follow the procedure detailed below when deploying the airbag.**

HINT:

Prepare a battery as the power source to deploy the airbag.

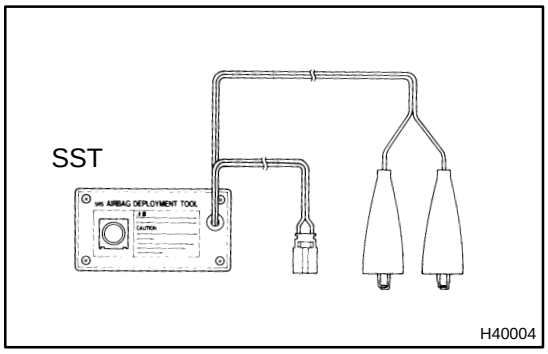

(a) Check the function of the SST (See step 1−(a) on page 60−27).

(b) Remove the curtain shield airbag assy LH (See page 60−46).

CAUTION:

When removing the curtain shield airbag assy LH, work must be started 90 seconds after the ignition switch is turned to the "LOCK" position and the negative (−) terminal cable is disconnected from the battery.

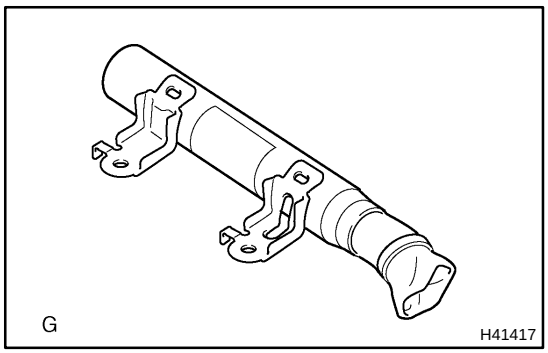

(c) Cut off the deployment section of the curtain shield airbag assy LH.

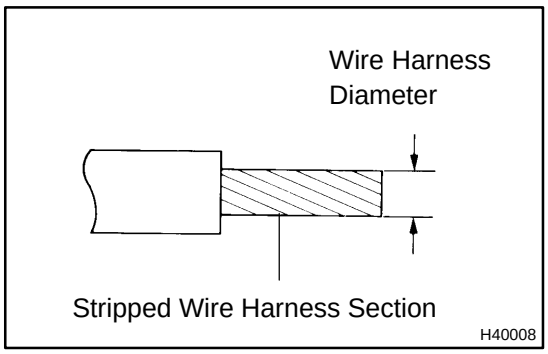

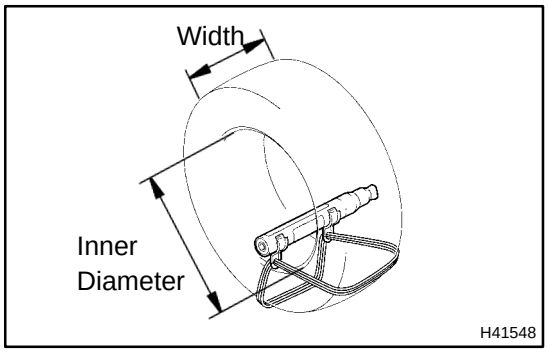

(d) Using a service−purpose wire harness for the vehicle, tie down the curtain shield airbag assy LH to the tire.
Wire harness: Stripped wire harness section 1.25 mm^2 or more (0.0019 in.^{2} or more)

CAUTION:
If a wire harness which is too thin or an alternative object is used to tie down the curtain shield airbag assy LH, it may be snapped by the shock when the airbag is deployed. Always use a wire harness for vehicle use which has a section of at least 1.25 mm^2 (0.0019 in.^{2}).

HINT:

- To calculate the square of the stripped wire harness section:
  Square = 3.14 x (Diameter)^2 divided by 4
- Place the curtain shield airbag assy LH inside the tire as shown in the illustration.
  Tire size: Must exceed the following dimensions
  Width: 185 mm (7.28 in.)
  Inner diameter: 360 mm (14.17 in.)

CAUTION:

- **Make sure that the wire harness is tight. It is highly dangerous when looseness in the wire harness results in the curtain shield airbag assy LH coming free due to the shock from the airbag deployment.**

NOTICE:
The tire will be marked by the airbag deployment, so use a redundant tire.

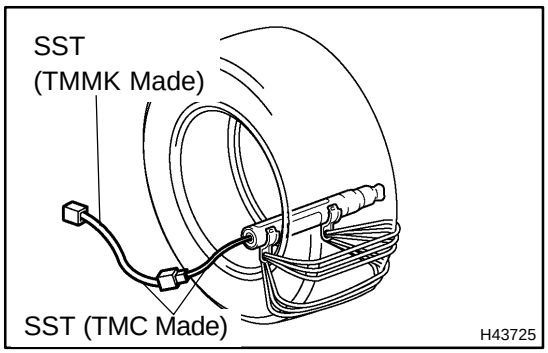

(e) Install the SST.
(1) TMC Made:
After connecting the SST below to each other, connect them to the curtain shield airbag assy LH.
SST 09082−00802 (09082−10801, 09082−20801)
(2) TMMK Made:
Connect the connector of the SST to the curtain shield airbag assy LH.
SST 09082−00760

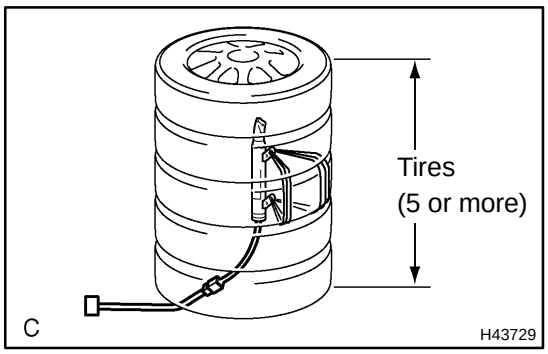

(f) Place the tires.

CAUTION:

Do not place the deployment direction of the curtain shield airbag assy LH facing toward the ground.

(1) Place at least 2 tires under the tire to which the curtain shield airbag assy LH is tied.

(2) Place at least 2 tires over the tire to which the curtain shield airbag assy LH is tied. The top tire should have the disc wheel installed.

NOTICE:

Do not place the SST connector under the tire because the SST connector could be damaged.

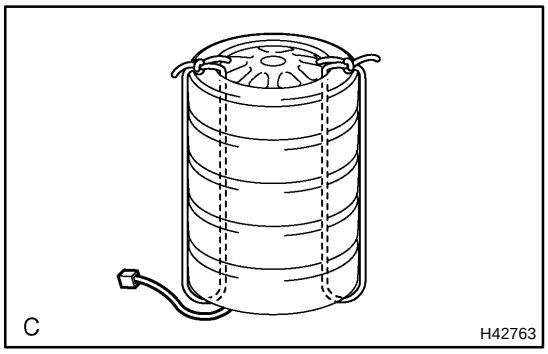

(3) Tie the tires together with 2 wire harnesses.

CAUTION:

Make sure that the wire harness is tight. It is highly dangerous when looseness in the wire harness results in the tires coming free due to the shock from the airbag deployment.

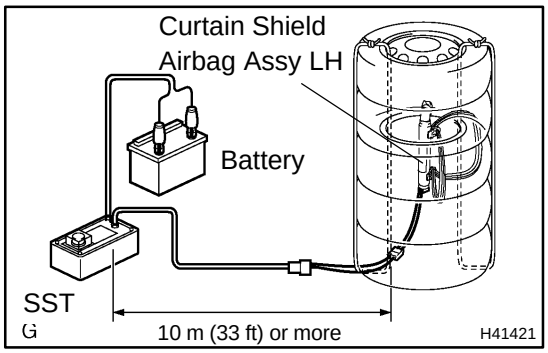

(g) Install the SST.

Connect the connector of the SST.

SST 09082−00700

NOTICE:

To avoid damaging the SST connector and wire harness, do not lock the secondary lock of the twin lock. Also, secure some slack for the SST wire harness inside the tire.

(h) Deploy the airbag.

(1) Connect the red clip of the SST to the battery positive (+) terminal and the black clip of the SST to the battery negative (−) terminal.

(2) Check that no one is within a 10 m (33 ft) radius of the tire to which the curtain shield airbag assy LH is tied.

(3) Press the activation switch of the SST and deploy the airbag.

HINT:

The airbag is deployed as the LED of the SST activation switch comes on.

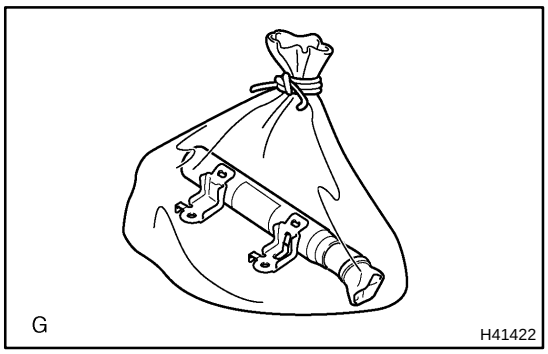

(i) Dispose of the curtain shield airbag assy LH.

CAUTION:

- **The curtain shield airbag assy LH is extremely hot when the airbag is deployed, so do not touch it for at least 30 minutes after deployment.**
- **Use gloves and safety glasses when handling the curtain shield airbag assy LH with the deployed airbag.**
- **Always wash your hands with water after completing the operation.**
- **Do not apply water, etc. to the curtain shield airbag assy LH with the deployed airbag.**

(1) Remove the curtain shield airbag assy LH from the tire.

(2) Place the curtain shield airbag assy LH in a plastic bag, tie it tightly and dispose of it in the same way as for other general parts disposal.

FRONT SEAT AIRBAG ASSY RH

6007P−06

DISPOSAL

HINT:

When scrapping vehicles equipped with an SRS or disposing of the front seat airbag assy always first deploy the airbag in accordance with the procedure described below. If any abnormality occurs with the airbag deployment, contact the SERVICE DEPT. of TOYOTA MOTOR SALES, U.S.A., INC.

When disposing of a front seat airbag assy with an airbag deployed in a collision, follow the same procedure given in step 1−(e) in ”DISPOSAL”.

CAUTION:

- **Never dispose of a front seat airbag assy which has an undeployed airbag.**
- **The airbag produces a sizeable exploding sound when it deploys, so perform the operation out of doors and where it will not create a nuisance to nearby residents.**

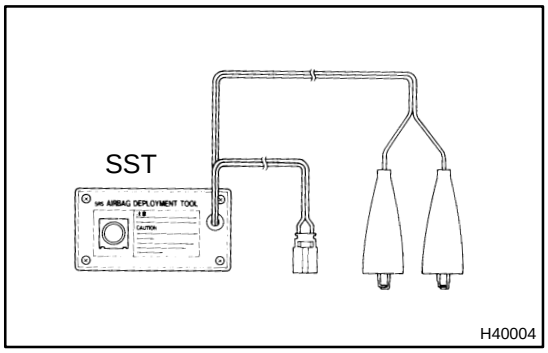

- **When deploying the airbag, always use the specified SST (SRS Airbag Deployment Tool), perform the operation in a place away from electrical noise.**
- **When deploying an airbag, perform the operation at least 10 m (33 ft) away from the airbag assy.**
- **The front seat airbag assy is very hot when the airbag is deployed, so leave it alone for at least 30 minutes after deployment.**
- **Use gloves and safety glasses when handling front seat airbag assy with the deployed airbag.**
- **Always wash your hands with water after completing the operation.**
- **Do not apply water, etc. to a front seat airbag assy with the deployed airbag.**

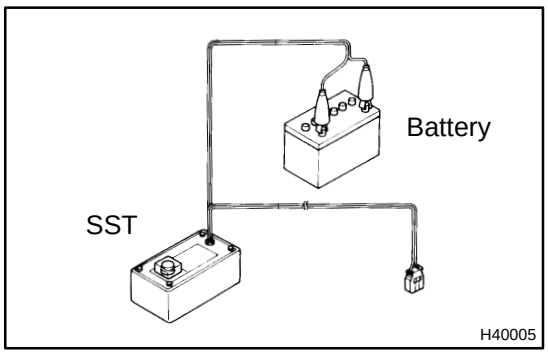

1. DISPOSE OF FRONT SEAT AIRBAG ASSY RH (WHEN SCRAPPING VEHICLE DEPLOYMENT METHOD)

HINT:

Have a battery ready as the power source to deploy the airbag.

(a) Check functioning of the SST (See page 60−27).

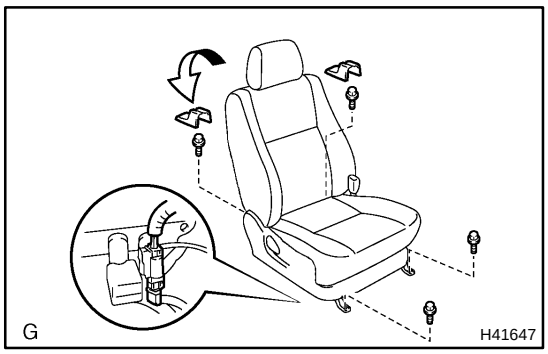

(b) Remove the front seat assy (See page 72−23 (power seat) or 72−15 (manual seat)).

(c) Disconnect the front seat airbag connector.

NOTICE:

When handling the airbag connector, take care not to damage the airbag wire harness.

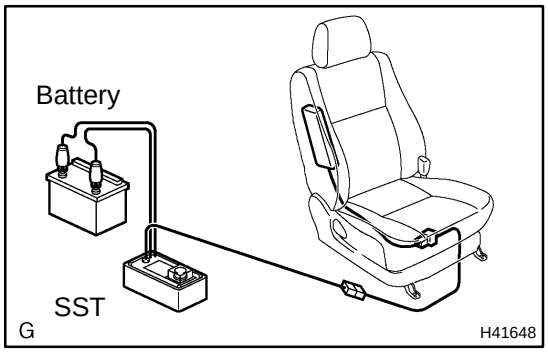

(d) Install the SST.

(1) Connect the connectors of the 2 SST connector to the front seat airbag connector.

SST 09082−00700, 09082−00750

NOTICE:

To avoid damaging the SST connector and wire harness, do not lock the secondary lock of the twin lock.

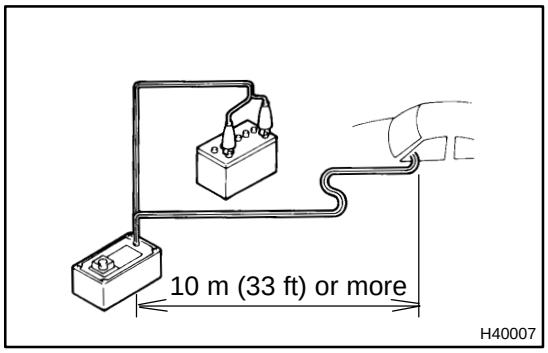

(2) Move the SST to at least 10 m (33 ft) away from the front of the vehicle.

(3) Close all the doors and windows of the vehicle.

NOTICE:

Take care not to damage the SST wire harness.

(4) Connect the red clip of the SST to the battery positive (+) terminal and the black clip of the SST to the battery negative (−) terminal.

(e) Deploy the airbag.

(1) Confirm that no one is inside the vehicle or within 10 m (33 ft) area around the vehicle.

(2) Press the activation switch of the SST and deploy the airbag.

HINT:

The airbag deploys simultaneously as the LED of the SST activation switch lights up.

(f) Dispose of the front seat airbag assy.

CAUTION:

- **The front seat airbag assy is very hot when the airbag is deployed, so leave it alone for at least 30 minutes after deployment.**
- **Use gloves and safety glasses when handling a front seat airbag assy with the deployed airbag.**
- **When moving a vehicle for scrapping which has a front seat airbag assy with the deployed airbag, use gloves and safety glasses.**
- **Do not apply water, etc. to a front seat airbag assy with the deployed airbag.**
- **Always wash your hands with water after completing the operation.**

HINT:
When scrapping a vehicle, deploy the airbag and scrap the vehicle with the front seat airbag assy still installed.

2. DISPOSE OF FRONT SEAT AIRBAG ASSY RH (WHEN DISPOSING OF AIRBAG ASSEMBLY DEPLOYMENT METHOD)

NOTICE:

- **When disposing of the front seat airbag assy only, never use the customer's vehicle to deploy the airbag.**
- **Be sure to follow the procedure given below when deploying the airbag.**

HINT:
Have a battery ready as the power source to deploy the airbag.

(a) Remove the front seat airbag assy.
  (1) Remove the front seat assy (See page 72−23 (power seat) or 72−15 (manual seat)).
  (2) Remove the 2 nuts and front seat airbag assy from the seatback assembly.

CAUTION:
Store the front seat airbag assy with the airbag deployment side facing upward.

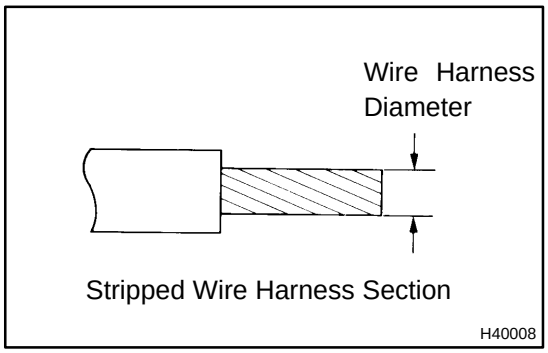

(b) Using a service−purpose wire harness, tie down the front seat airbag assy.
  Wire harness: Stripped wire harness section 1.25 mm^2 or more (0.0019 in^2 or more)

HINT:
To calculate the square of the stripped wire harness section :
Square = 3.14 x $(Diameter)^2$ divided by 4

CAUTION:
If a wire harness which is too thin or some other thing is used to tie down the front seat airbag assy, it may be snapped by the shock when the airbag is deployed. This is highly dangerous. Always use a wire harness for vehicle use which is at least 1.25 mm^2 (0.0019 in^2).

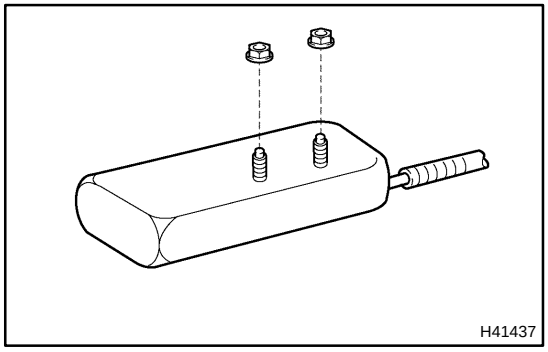

  (1) Install the 2 nuts in the front seat airbag assy.

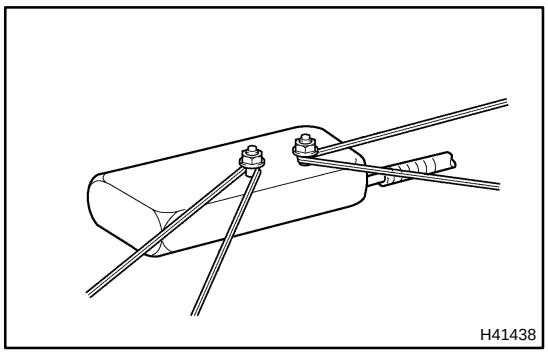
H41438

(2) Wind the wire harness around the stud bolts of the front seat airbag assy as shown in the illustration.

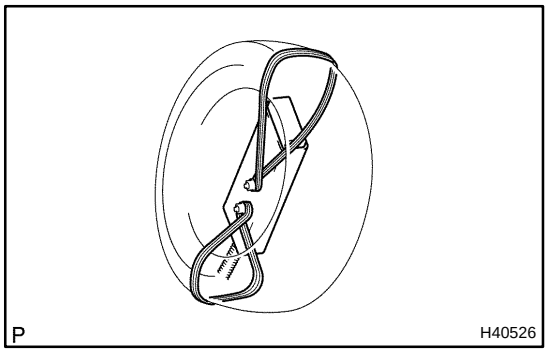
P H40526

(3) Position the front seat airbag assy inside the tire with the airbag deployment direction facing inside.

Tire size : Must exceed the following dimensions:−
Width 185 mm (7.28 in.)
Inner diameter 360 mm (14.17 in.)

CAUTION:

- **Make sure the wire harness is tight. It is very dangerous if looseness in the wire harness results in the front seat airbag assy coming free due to the shock from the airbag deploying.**
- **Always tie down the front seat airbag assy with the airbag door facing inside.**

NOTICE:

The tire will be marked by the airbag deployment, so use the redundant tire.

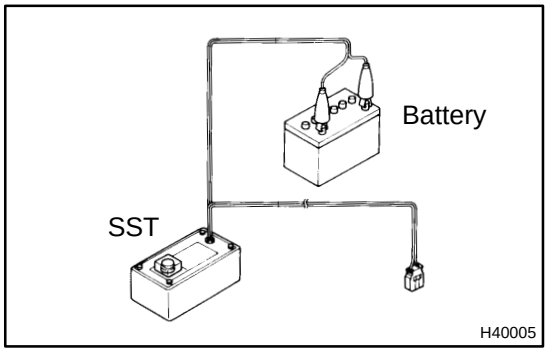

H40005

(c) Check functioning of the SST (See step 1−(a) on page 60−27).
SST 09082−00700

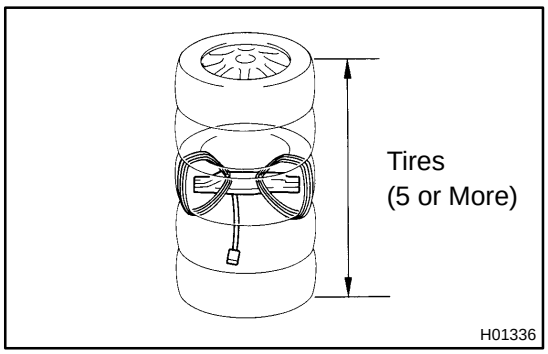

H01336

(d) Place the tires.
(1) Place at least 2 tires under the tire to which the front seat airbag assy is tied.
(2) Place at least 2 tires over the tire to which the front seat airbag assy is tied. The top tire should have the wheel installed.

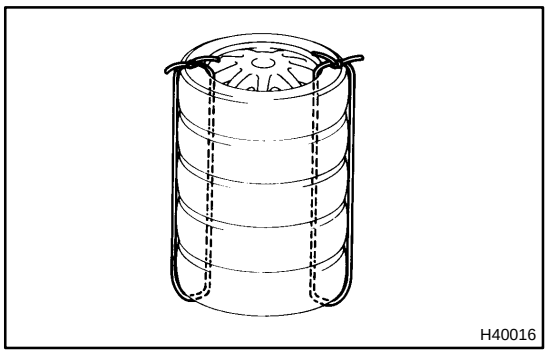
H40016

(3) Tie the tires together with 2 wire harnesses.

CAUTION:

Make sure that the wire harness is tight. It is very dangerous if looseness in the wire harness results in the tires coming free due to the shock from the airbag deploying.

HINT:

Place the SST connector and wire harness inside tires. Secure at least 1 m (3 ft) of slack for the wire harness.

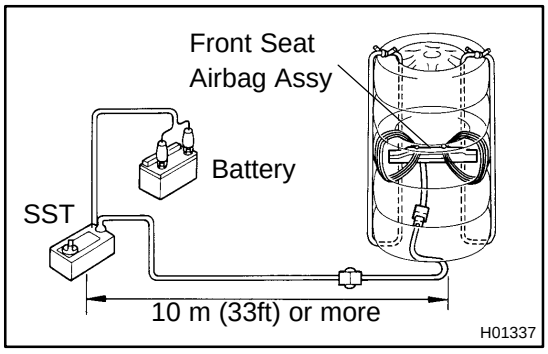

H01337

(e) Install the SST.

Connect the connectors of the 2 SST to the front seat airbag assy connector.

SST 09082−00700, 09082−00750

NOTICE:

To avoid damaging the SST connector and wire harness, do not lock the secondary lock of the twin lock. Also, secure some slack for the SST wire harness inside the tire.

(f) Deploy the airbag.

(1) Connect the SST red clip to the battery positive (+) terminal and the black clip to the battery negative (−) terminal.

(2) Check that no one is within 10 m (33 ft) area around the tire which the front seat airbag assy is tied to.

(3) Press the SST activation switch and deploy the airbag.

HINT:

The airbag deploys simultaneously as the LED of the SST activation switch lights up.

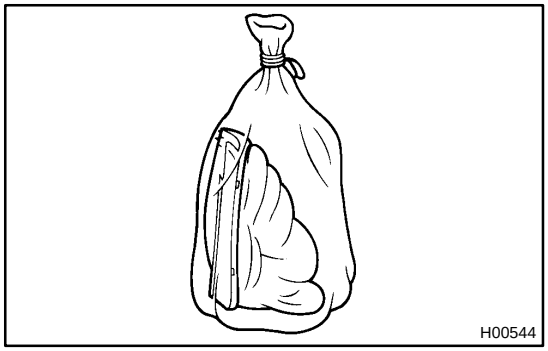
H00544

(g) Dispose of the front seat airbag assy.

CAUTION:

- **The front seat airbag assy is very hot when the airbag is deployed, so leave it alone for at least 30 minutes after deployment.**
- **Use gloves and safety glasses when handling a front seat airbag assy with the deployed airbag.**
- **Do not apply water etc. to a front seat airbag assy with the deployed airbag.**
- **Always wash your hands with water after completing the operation.**

(1) Remove the front seat airbag assy from the tire.

(2) Place the front seat airbag assy in a vinyl bag, tie the end tightly and dispose of it in the same way as other general parts disposal.

AIR BAG SENSOR ASSY CENTER

60099−07

COMPONENTS

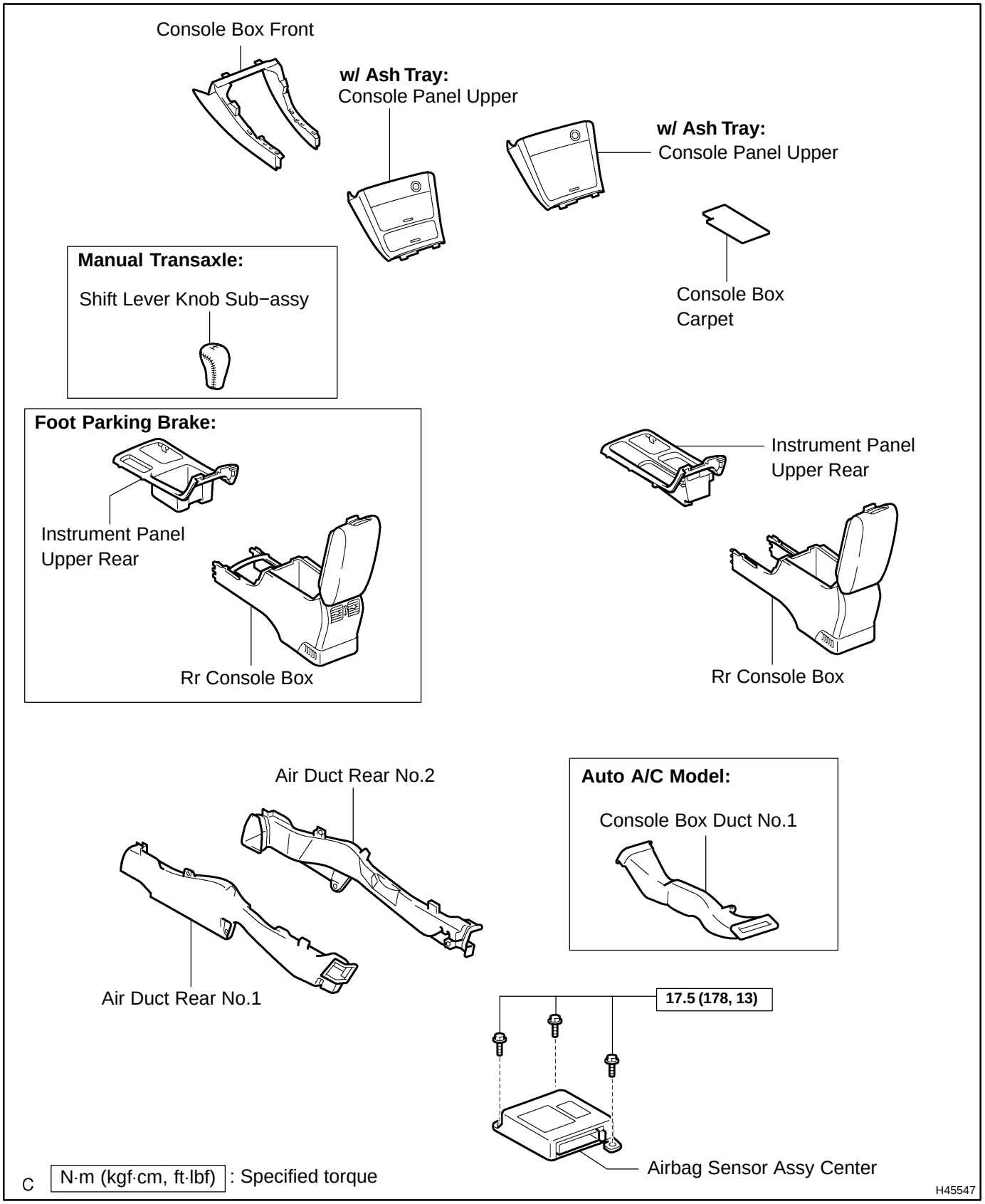

6009A−08

REPLACEMENT

HINT:

Installation is in the reverse order of removal.

1. PRECAUTION (See page 60−1)

2. SEPARATE BATTERY NEGATIVE TERMINAL

CAUTION:

After removing the terminal, wait for at least 90 seconds before starting the operation.

3. REMOVE SHIFT LEVER KNOB SUB−ASSY (MANUAL TRANSAXLE) (See page 71−16)

4. REMOVE CONSOLE PANEL UPPER REAR (See page 71−16)

5. REMOVE CONSOLE BOX CARPET (See page 71−16)

6. REMOVE RR CONSOLE BOX (See page 71−16)

7. REMOVE CONSOLE PANEL SUB−ASSY (See page 71−16)

8. REMOVE CONSOLE BOX FRONT (See page 71−16)

9. REMOVE AIR DUCT REAR NO.1 (See page 55−34)

10. REMOVE AIR DUCT REAR NO.2 (See page 55−34)

11. REMOVE CONSOLE BOX DUCT NO.1 (A/T TRANSAXLE) (See page 55−34)

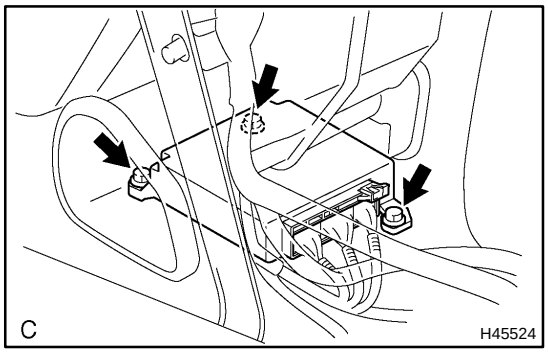

12. REMOVE AIR BAG SENSOR ASSY CENTER

(a) Disconnect the holder (with connectors) from the airbag sensor assy center.

(b) Remove the 3 bolts and the airbag sensor assy center.

13. INSPECT AIR BAG SENSOR ASSY CENTER (See page 60−17)

14. INSTALL AIR BAG SENSOR ASSY CENTER

(a) Check that the ignition switch is off.

(b) Check that the battery negative (−) terminal is disconnected.

CAUTION:

After removing the terminal, wait for at least 90 seconds before starting the operation.

(c) Temporarily install the airbag sensor assy center with the 3 bolts.

NOTICE:

- **If the airbag sensor assy center has been dropped, or there are any cracks, dents or other defects in the case, bracket or connector, replace the airbag sensor assy center with a new one.**
- **When installing the airbag sensor assy center, be careful that the SRS wiring does not interfere with other parts and is not pinched between other parts.**

(d) Tighten the 3 bolts to the specified torque.

Torque: 17.5 N·m (178 kgf·cm, 13 ft·lbf)

(e) Connect the holder (with connectors) to the airbag sensor assy center.

(f) Check that there is no looseness in the installation parts of the airbag sensor assy center.

(g) Check that the water−proof sheet is properly set.

15. CONNECT BATTERY NEGATIVE TERMINAL

16. INSPECT SRS WARNING LIGHT (See page 05−1456)

AIR BAG FRONT RH SENSOR

6007S−03

COMPONENTS

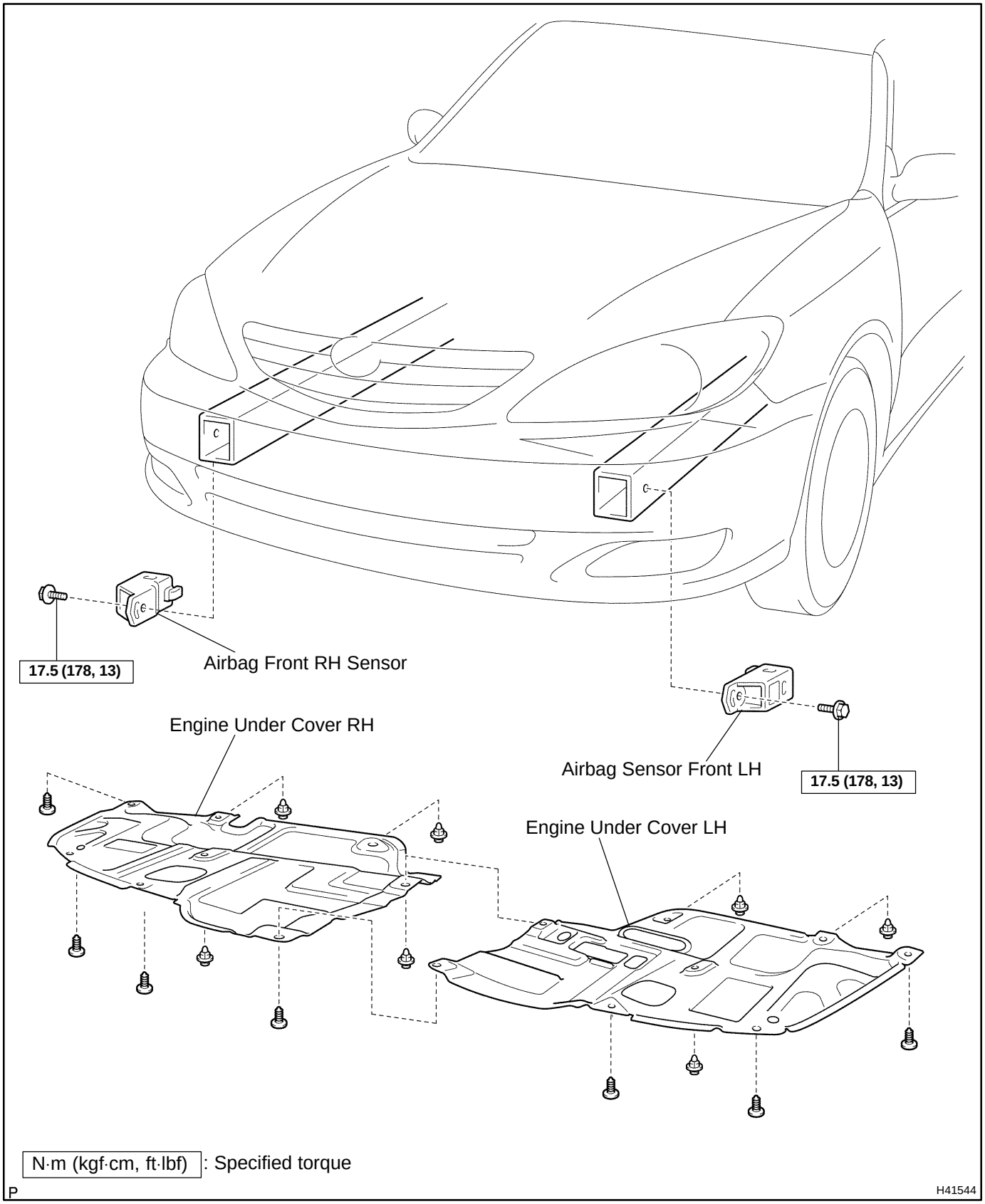

6007T−02

REPLACEMENT

HINT:

COMPONENTS: See page 60−60

1. PRECAUTION (See page 60−1)

2. DISCONNECT BATTERY NEGATIVE TERMINAL

3. REMOVE ENGINE UNDER COVER RH (See page 14−29)

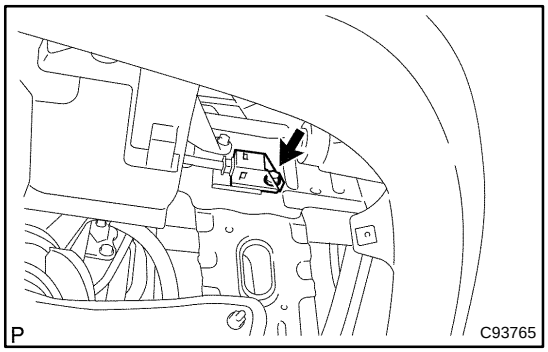

4. REMOVE AIR BAG FRONT RH SENSOR

(a) Remove the bolt and front airbag sensor RH.

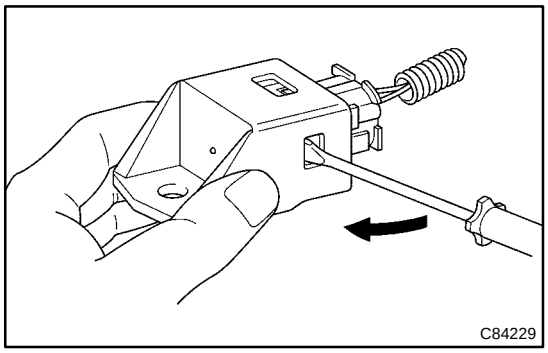

(b) Disconnect the connector from the front airbag sensor RH.

HINT:

Insert a screw driver in any of the three opening sections of the sensor and slide the sensor to disconnect it from the connector.

5. INSPECT AIR BAG FRONT RH SENSOR (See page 60−17)

6. INSTALL AIR BAG FRONT RH SENSOR

(a) Check that the ignition switch trun OFF.

(b) Check that the battery negative (−) terminal is disconnected.

NOTICE:

Do not start the operation for 90 seconds after removing the terminal.

(c) Install the front airbag sensor RH with the bolt.

Torque: 17.5 N·m (178 kgf·cm, 13 ft·lbf)

(d) Connect the connector to the front airbag sensor RH.

(e) Check that no play is identified.

7. INSPECT SRS WARNING LIGHT (See page 05−1456)

AIR BAG SENSOR FRONT LH

6007U−03

COMPONENTS

(See page 60−60)

6007V−03

REPLACEMENT

HINT:

COMPONENTS: See page 60−60

1. PRECAUTION (See page 60−1)

2. DISCONNECT BATTERY NEGATIVE TERMINAL

3. REMOVE ENGINE UNDER COVER LH (See page 72−32)

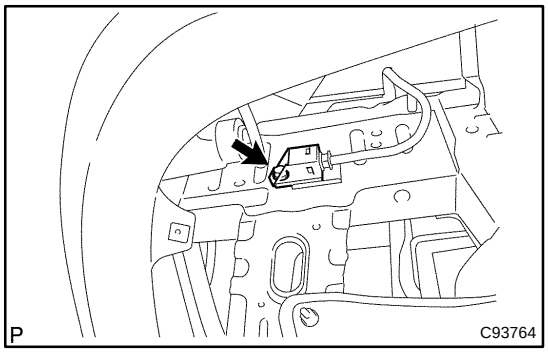

4. REMOVE AIR BAG SENSOR FRONT LH

(a) Remove the bolt and front airbag sensor LH.

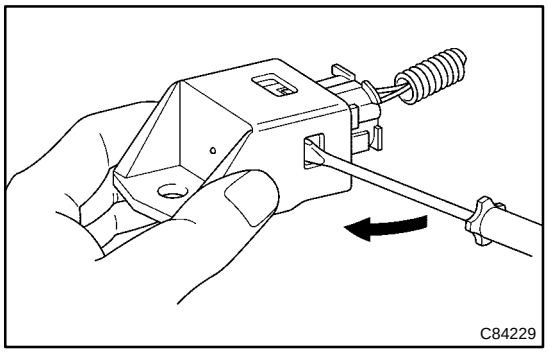

(b) Disconnect the connector from the front airbag sensor LH.

HINT:

Insert a screw driver in any of the three opening sections of the sensor and slide the sensor to disconnect it from the connector.

5. INSPECT AIR BAG SENSOR FRONT LH (See page 60−17)

6. INSTALL AIR BAG SENSOR FRONT LH

(a) Check that the ignition switch is off.

(b) Check that the battery negative (−) terminal is disconnected.

NOTICE:

Do not start the operation for 90 seconds after removing the terminal.

(c) Install the front airbag sensor LH with the bolt.

Torque: 17.5 N·m (178 kgf·cm, 13 ft·lbf)

(d) Connect the connector to the front airbag sensor LH.

(e) Check that no play is identified.

7. INSPECT SRS WARNING LIGHT (See page 05−1456)

SIDE AIR BAG SENSOR ASSY RH

600OR−01

COMPONENTS

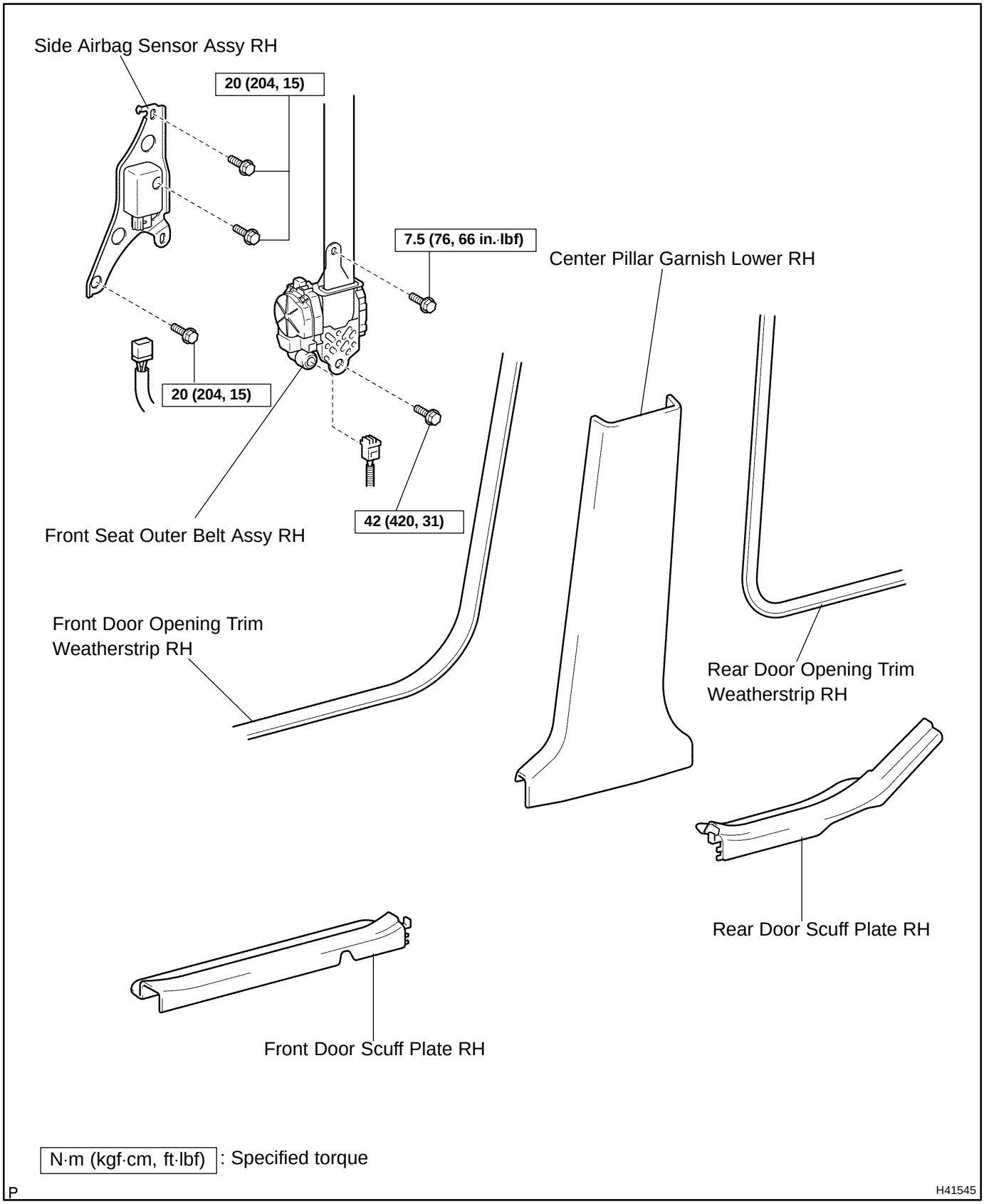

N·m (kgf·cm, ft·lbf) : Specified torque

P

H41545

6009G−09

REPLACEMENT

HINT:

- Replacement procedure of the LH side is the same as that for the RH side.
- Installation is in the reverse order of removal.

1. PRECAUTION (See page 60−1)
2. DISCONNECT BATTERY NEGATIVE TERMINAL
3. REMOVE FRONT DOOR SCUFF PLATE RH (See page 76−22)
4. REMOVE REAR DOOR SCUFF PLATE RH (See page 76−22)
5. REMOVE FRONT DOOR OPENING TRIM WEATHERSTRIP RH (See page 61−5)
6. REMOVE REAR DOOR OPENING TRIM WEATHERSTRIP RH (See page 61−5)
7. REMOVE CENTER PILLAR GARNISH LOWER RH (See page 61−5)
8. REMOVE FRONT SEAT OUTER BELT ASSY RH (See page 61−5)

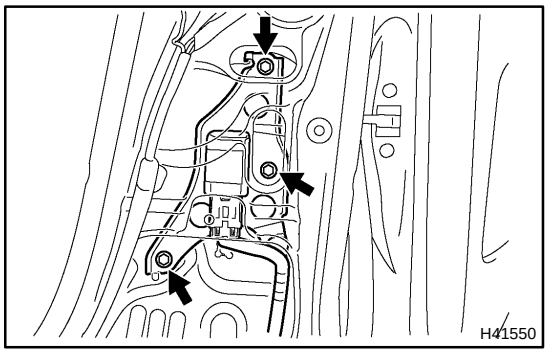

9. REMOVE SIDE AIR BAG SENSOR ASSY RH

(a) Disconnect the connector from the side airbag sensor assy RH.

(b) Remove the 3 bolts and the side airbag sensor assy RH.

10. INSTALL SIDE AIR BAG SENSOR ASSY RH

(a) Check that the ignition switch is off.

(b) Check that the battery negative (−) terminal is disconnected.

CAUTION:

After removing the terminal, wait for at least 90 seconds before starting the operation.

(c) Install the side airbag sensor assy RH with the 3 bolts.

Torque: 20 N·m (204 kgf·cm, 15 ft·lbf)

NOTICE:

- **If the side airbag sensor assy RH has been dropped, or there are any cracks, dents or other defects in the case, bracket or connector, replace the side airbag sensor assy RH with a new one.**
- **When installing the side airbag sensor assy RH, be careful that the SRS wiring does not interfere with other parts and is not pinched between other parts.**

(d) Connect the connector to the side airbag sensor assy RH.

(e) Check that there is no looseness in the installation parts of the side airbag sensor assy RH.

11. INSPECT SRS WARNING LIGHT (See page 05−1456)

AIR BAG SENSOR REAR LH

COMPONENTS

6007Y−02

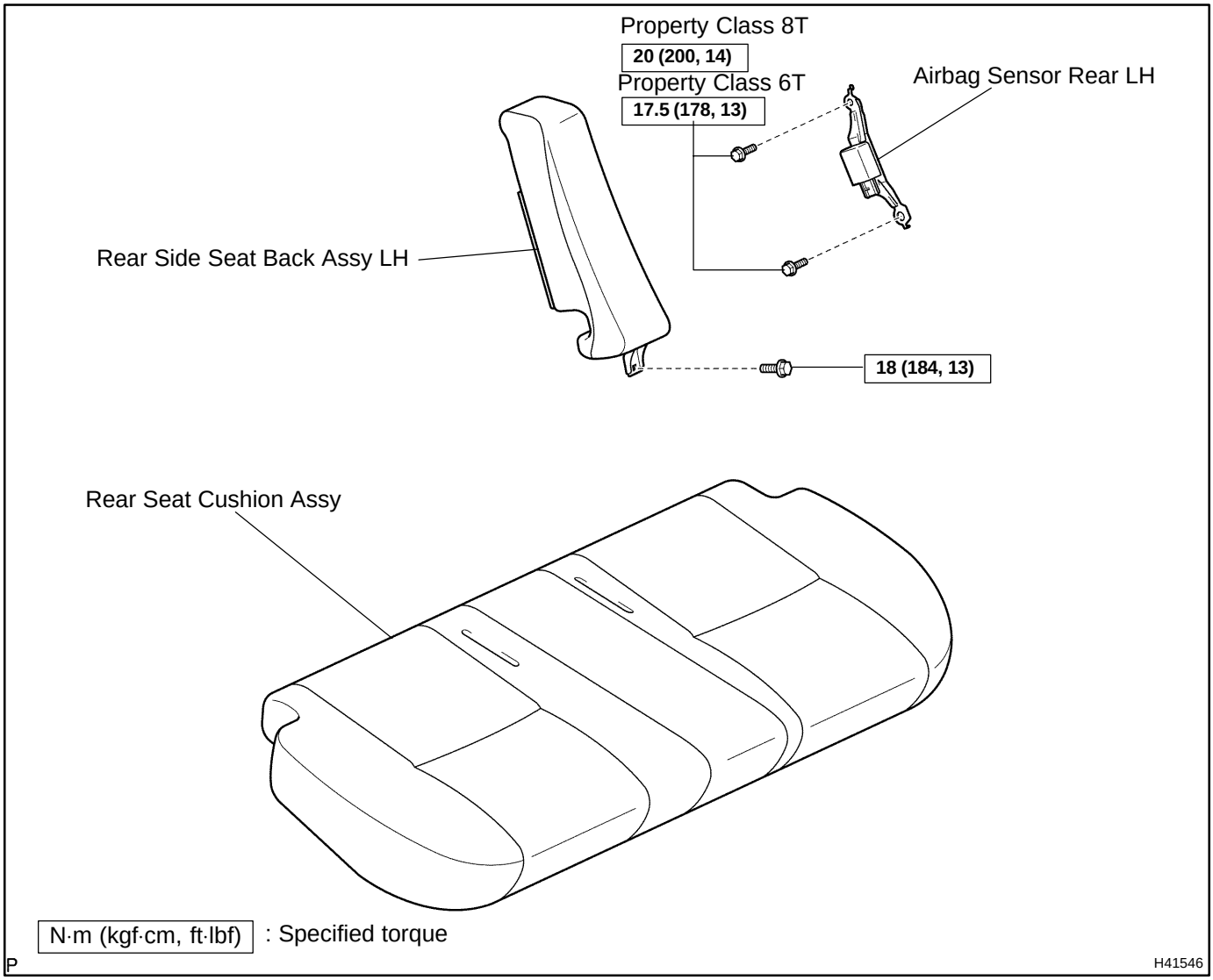

6007Z−03

REPLACEMENT

HINT:

Replacement procedure of the RH side is the same as that for the LH side.

1. **PRECAUTION (See page 60−1)**
2. **DISCONNECT BATTERY NEGATIVE TERMINAL**
3. **REMOVE REAR SEAT CUSHION ASSY (See page 72−32)**
4. **REMOVE REAR SIDE SEAT BACK ASSY LH (See page 72−32)**

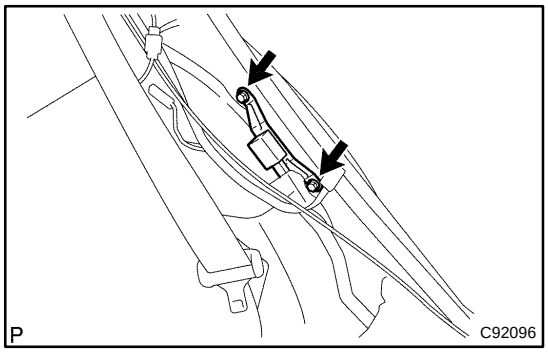

5. **REMOVE AIR BAG SENSOR REAR LH**

(a) Disconnect the connector from the airbag sensor rear LH.

(b) Remove the 2 bolts and the airbag sensor rear LH.

6. **INSTALL AIR BAG SENSOR REAR LH**

(a) Check that the ignition switch is off.

(b) Check that the battery negative (−) terminal is disconnected.

NOTICE:

After removing the terminal wait for at least 90 seconds before starting the operation.

(c) Install the airbag sensor rear LH with the 2 bolts.

Torque:

Property class 6T: 17.5 N·m (178 kgf·cm, 13 ft·lbf)

Property class 8T: 20 N·m (200 kgf·cm, 14 ft·lbf)

HINT:

Select a suitable bolt (See page 03−2).

NOTICE:

- **If the airbag sensor rear LH has been dropped, or there are any cracks, dents or other defects in the case, bracket or connector, replace the airbag sensor rear LH with a new one.**
- **When installing the airbag sensor rear LH, be careful that the SRS wiring does not interfere with other parts and is not pinched between other parts.**

(d) Connect the connector to the airbag sensor rear LH.

(e) Check that there is no looseness in the installation parts of the airbag sensor rear LH.

7. **INSPECT AIR BAG SENSOR REAR LH (See page 60−17)**
8. **INSTALL REAR SIDE SEAT BACK ASSY LH (See page 72−32)**
9. **INSPECT SRS WARNING LIGHT (See page 05−1456)**

SEAT POSITION AIR BAG SENSOR (From July, 2003)

6009J−07

COMPONENTS

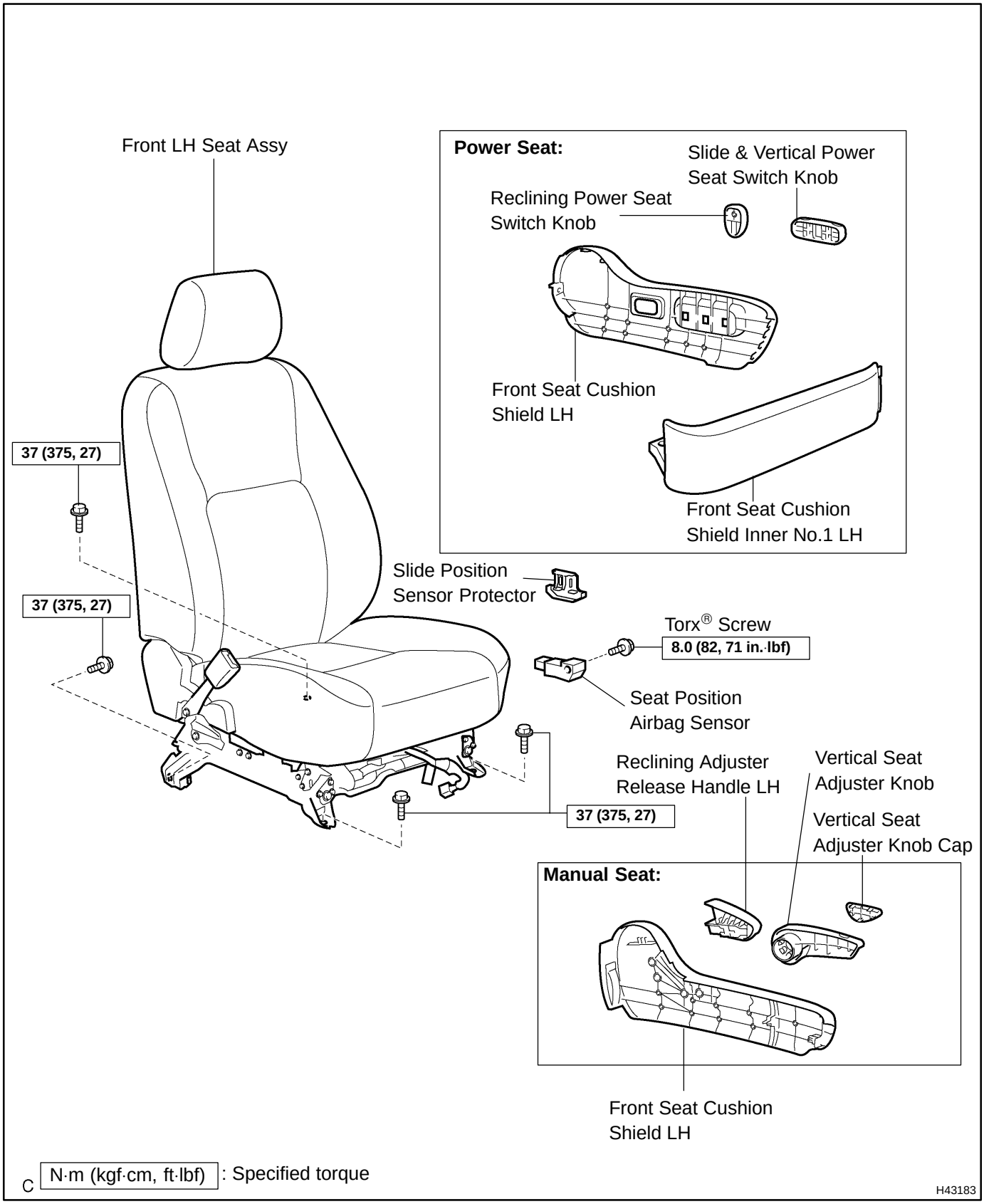

600OS−02

REPLACEMENT

HINT:

Installation is in the reverse order of removal.

1. **PRECAUTION (See page 60−1)**
2. **DISCONNECT BATTERY NEGATIVE TERMINAL**
3. **REMOVE FRONT SEAT ASSY LH (See page 72−23 (POWER SEAT) OR 72−15 (MANUAL SEAT))**
4. **REMOVE RECLINING POWER SEAT SWITCH KNOB (POWER SEAT) (See page 72−23)**
5. **REMOVE SLIDE & VERTICAL POWER SEAT SWITCH KNOB (POWER SEAT) (See page 72−23)**
6. **REMOVE FRONT SEAT CUSHION SHIELD INNER NO.1 LH (POWER SEAT) (See page 72−23)**
7. **REMOVE FRONT SEAT CUSHION SHIELD LH (POWER SEAT) (See page 72−23)**
8. **REMOVE RECLINING ADJUSTER RELEASE HANDLE LH (MANUAL SEAT) (See page 72−15)**
9. **REMOVE VERTICAL SEAT ADJUSTER KNOB CAP (MANUAL SEAT) (See page 72−15)**
10. **REMOVE VERTICAL SEAT ADJUSTER KNOB (MANUAL SEAT) (See page 72−15)**
11. **REMOVE FRONT SEAT CUSHION SHIELD LH (MANUAL SEAT) (See page 72−15)**

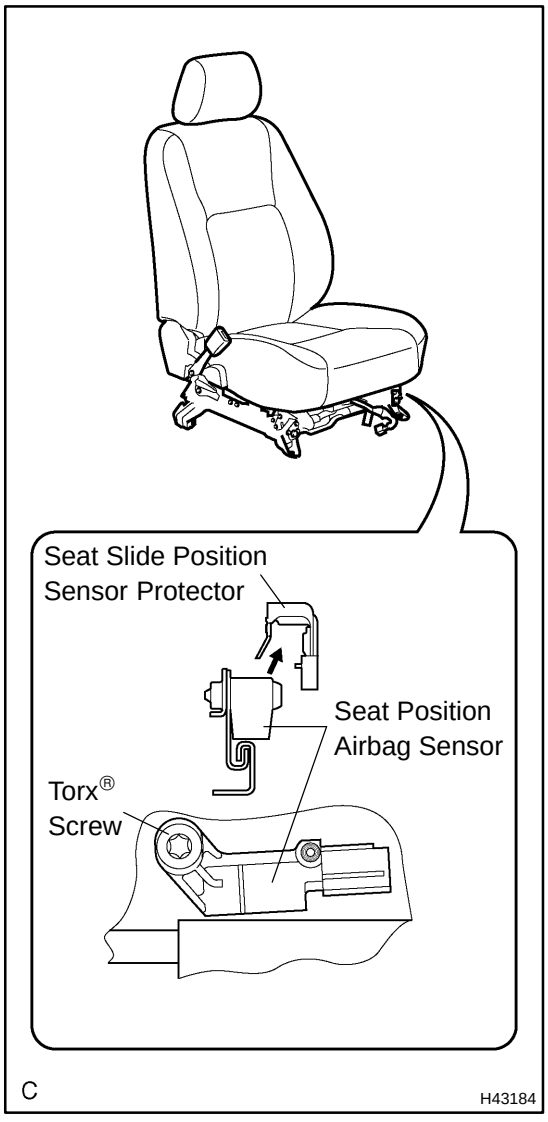

12. **REMOVE SEAT SLIDE POSITION SENSOR PROTECTOR**

(a) Remove the seat slide position sensor protector from the seat position airbag sensor.

13. **REMOVE SEAT POSITION AIR BAG SENSOR**

(a) Disconnect the connector from the seat position airbag sensor.

(b) Using a torx® socket wrench (T30), remove the torx® screw and the seat position airbag sensor.

14. INSTALL SEAT POSITION AIR BAG SENSOR

(a) Check that the ignition switch is off.

(b) Check that the battery negative (−) terminal is disconnected.

CAUTION:

After removing the terminal, wait for at least 90 seconds before starting the operation.

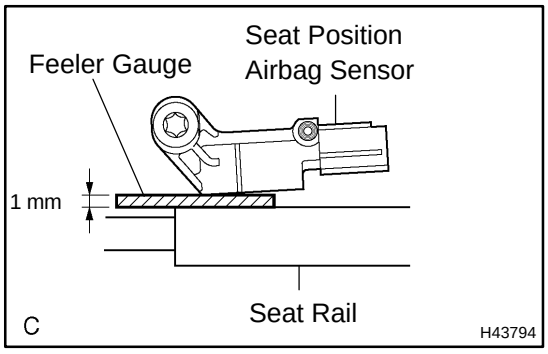

(c) Using a feeler gauge 1 mm (0.039 in.), install the seat position airbag sensor.

NOTICE:

- **If the seat position airbag sensor has been dropped, or there are any cracks, dents or other defects in the case, bracket or connector, replace the seat position airbag sensor with a new one.**
- **When installing the seat position airbag sensor, be careful that the SRS wiring does not interfere with other parts and is not pinched between other parts.**

HINT:

Be sure to maintain a clearance between the seat position airbag sensor and the seat rail is within 0.6 mm (0.023 in.) to 2 mm (0.079 in.).

(d) Using a torx® socket wrench, tighten the torx® screw to install the seat position airbag sensor.

Torque: 8.0 N·m (82 kgf·cm, 71 in.·lbf)

(e) Make sure that a clearance between the seat position airbag sensor and the seat rail is within 0.6 mm (0.023 in.) to 2 mm (0.079 in.).

(f) Connect the connector to the seat position airbag sensor.

(g) Check that there is no looseness in the installation parts of the seat position airbag sensor.

15. INSTALL FRONT SEAT ASSY LH (See page 72−23 (POWER SEAT) OR 72−15 (MANUAL SEAT))

16. INSPECT SRS WARNING LIGHT (See page 05−1456)

OCCUPANT CLASSIFICATION ECU (From July, 2003)

600KX−03

COMPONENTS

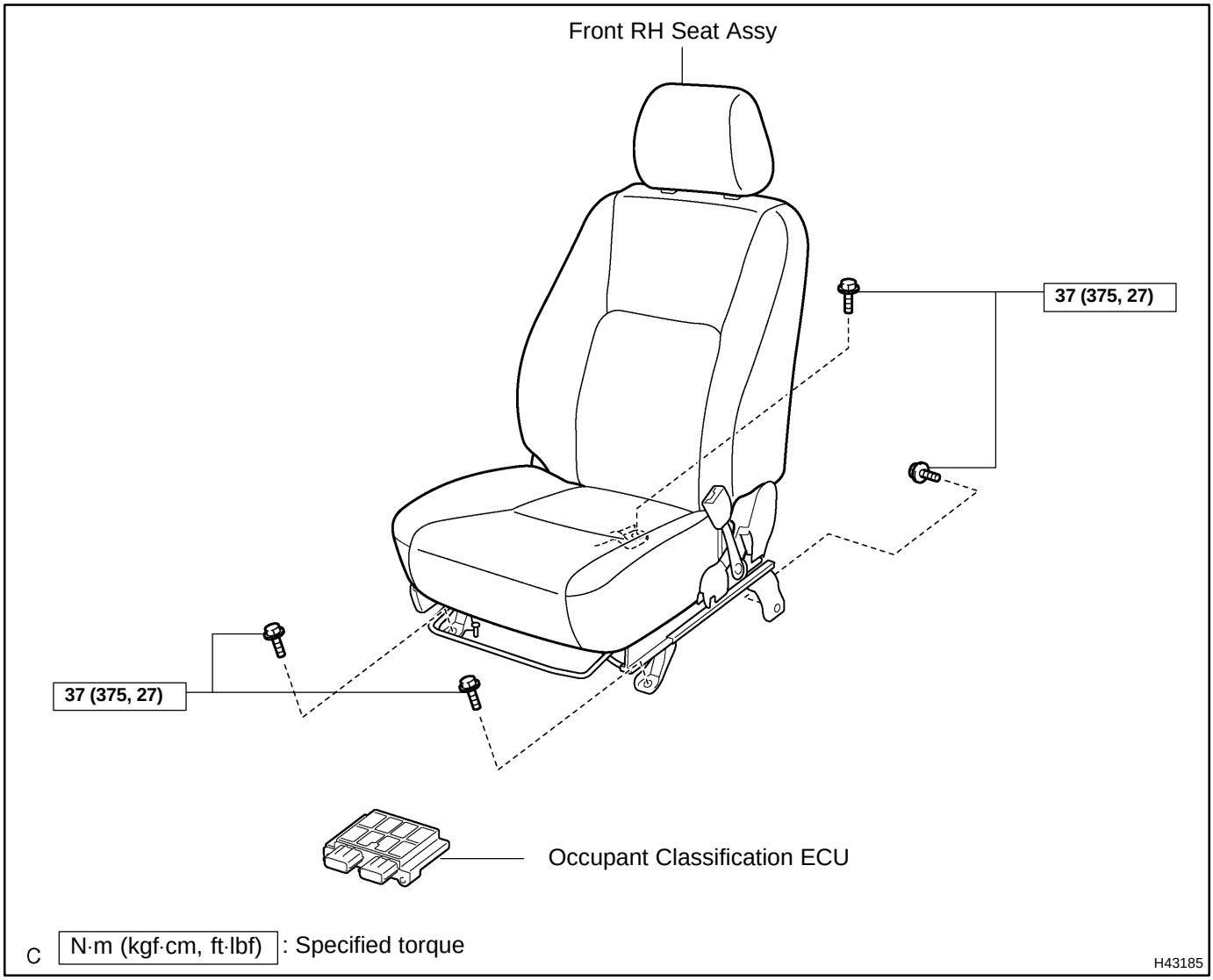

600KY−02

REPLACEMENT

HINT:

Installation is in the reverse order of removal.

1. **PRECAUTION (See page 60−1)**
2. **DISCONNECT BATTERY NEGATIVE TERMINAL**
3. **REMOVE FRONT RH SEAT ASSY (See page 72−15)**

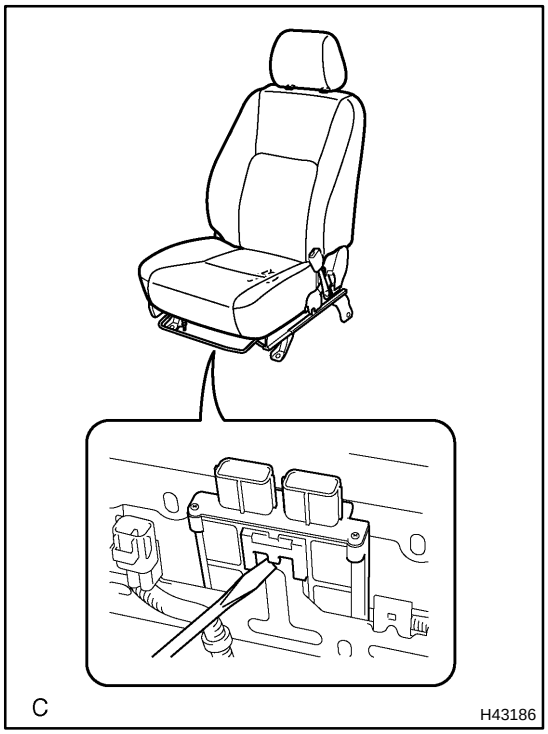

4. **REMOVE OCCUPANT CLASSIFICATION ECU**

(a) Disconnect the connectors from the occupant classification ECU.

(b) Using a screwdriver, remove the occupant classification ECU.

5. **INSTALL OCCUPANT CLASSIFICATION ECU**

(a) Check that the ignition switch is off.

(b) Check that the battery negative (−) terminal is disconnected.

CAUTION:

After removing the terminal, wait for at least 90 seconds before starting the operation.

(c) Install the occupant classification ECU.

(d) Connect the connectors to the occupant classification ECU.

NOTICE:

- **If the occupant classification ECU has been dropped, or there are cracks, dents or other defects in the case, bracket or connector, replace the occupant classification ECU with a new one.**
- **When installing the occupant classification ECU, take care that the SRS wiring does not interfere with other parts and is not pinched between other parts.**

6. **INSTALL FRONT RH SEAT ASSY (See page 72−15)**
7. **OCCUPANT CLASSIFICATION ECU INITIALIZATION (See page 05−1452)**
8. **INSPECT SRS WARNING LIGHT (See page 05−1456)**

SEAT BELT WARNING SYSTEM (From July, 2003)

610GF−01

LOCATION

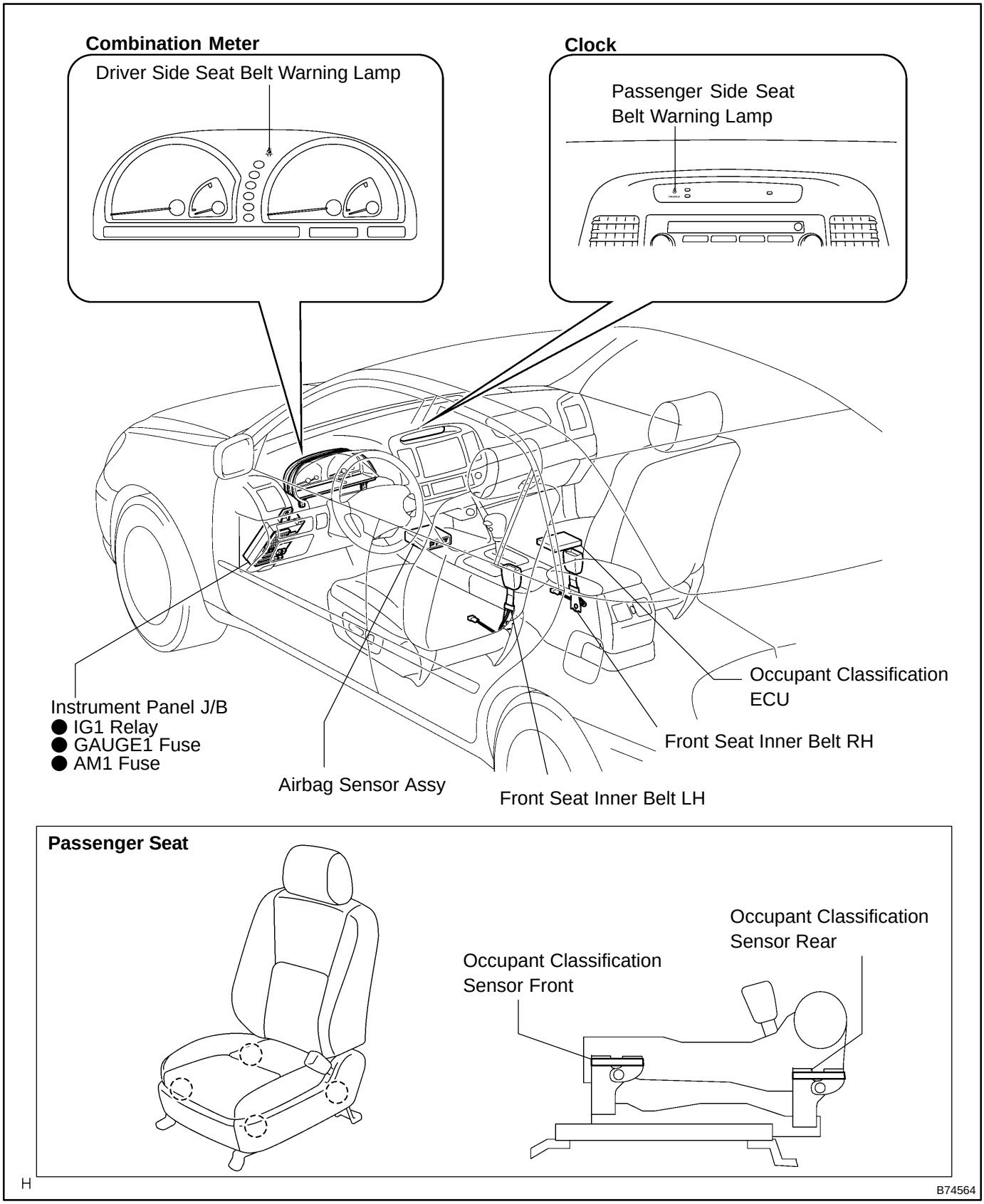

610GD−02

PROBLEM SYMPTOMS TABLE

Symptom	Suspected Area	See Page
Driver side seat belt warning light does not blink, or it does not go off after the seat belt is fastened when the ignition switch is on.	1. IG1 relay 2. AM1 fuse 3. GAUGE1 fuse 4. Front seat inner belt assy LH 5. Combination meter 6. Wire harness	61−1 61−1 61−1 61−3 05−2021 −
Passenger side seat belt warning light does not blink with the front passenger's seat occupied, or it does not go off after the seat belt is fastened when the ignition switch is on.	1. IG1 relay 2. AM1 fuse 3. GAUGE1 fuse 4. Clock 5. Front seat inner belt assy RH 6. Occupant classification ECU 7. Occupant classification sensor 8. Airbag sensor assy 9. Wire harness	61−1 61−1 61−1 05−2023 05−1478 05−1478 05−1478 05−1478 −

NOTICE:

The front seat inner belt RH can not be inspected. When the front seat inner belt seems to be malfunctioning, using the hand−held tester to check the DTC.

610GE−01

INSPECTION

TMMK made

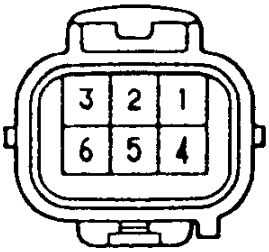

B75448

1. TMMK made:

INSPECT FRONT SEAT INNER BELT ASSY LH

(a) Check the buckle switch.

(1) Fasten the seat belt.

(2) Check the resistance between the terminals.

Standard:

Tester Connection	Specified Condition
3 − 6	1 MΩ or higher

(3) Release the seat belt.

(4) Check the resistance between the terminals.

Standard:

Tester Connection	Specified Condition
3 − 6	Below 1 Ω

If the result is not as specified, replace the inner belt assy.

TMC made

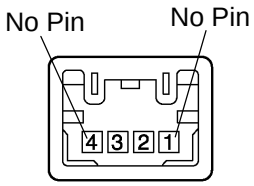

B75863

2. TMC made:

INSPECT FRONT SEAT INNER BELT ASSY LH

(a) Check the buckle switch.

(1) Fasten the seat belt.

(2) Check the resistance between the terminals.

Standard:

Tester Connection	Specified Condition
2 − 3	1 MΩ or higher

(3) Release the seat belt.

(4) Check the resistance between the terminals.

Standard:

Tester Connection	Specified Condition
2 − 3	Below 1 Ω

If the result is not as specified, replace the inner belt assy.

FRONT SEAT BELT

COMPONENTS

61053−03

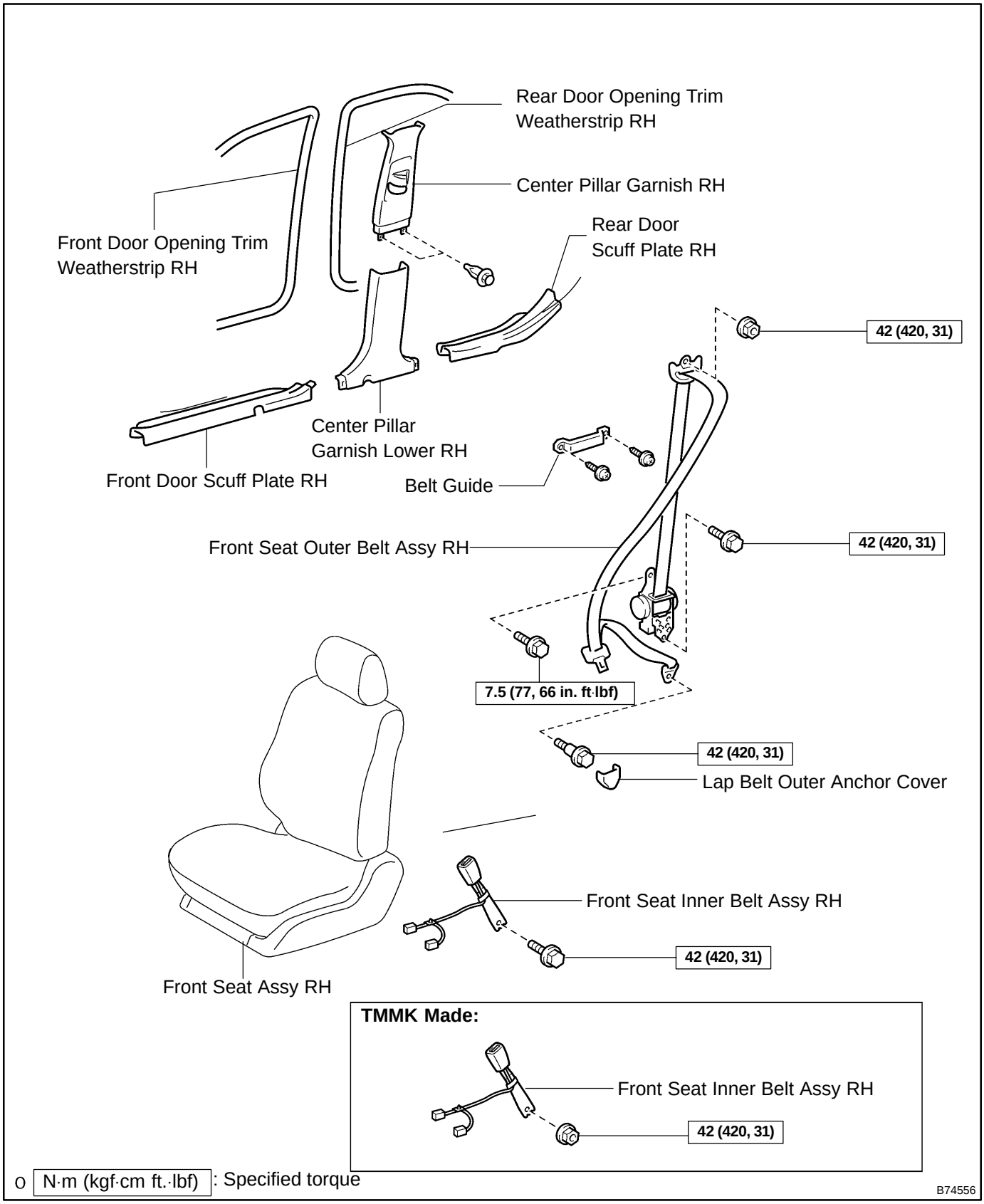

61054–04

REPLACEMENT

HINT:

- The installation is in the reverse order of the removal. However, when there is a special point concerning the installation, it is indicated.
- On the RH side, use the same procedures as on the LH side.

1. DISCONNECT BATTERY NEGATIVE TERMINAL

2. REMOVE FRONT SEAT ASSY RH (See page 72–23 or 72–15)

3. REMOVE FRONT DOOR SCUFF PLATE RH (See page 76–22)

4. REMOVE FRONT DOOR OPENING TRIM WEATHERSTRIP RH (See page 76–22)

5. REMOVE REAR DOOR SCUFF PLATE RH (See page 76–22)

6. REMOVE REAR DOOR OPENING TRIM WEATHERSTRIP RH (See page 76–22)

7. REMOVE LAP BELT OUTER ANCHOR COVER (See page 76–22)

8. REMOVE CENTER PILLAR GARNISH LOWER RH (See page 76–22)

9. REMOVE CENTER PILLAR GARNISH UPPER RH (See page 76–22)

10. REMOVE FRONT SEAT OUTER BELT ASSY RH

(a) Remove the 2 screws and belt guide.

(b) Remove the nut and the shoulder anchor.

NOTICE:

When removing the seat belt pretensioner, operation must be started after 90 seconds have passed from the time the ignition switch is turned to the LOCK position and the negative (−) terminal cable is disconnected from the battery.

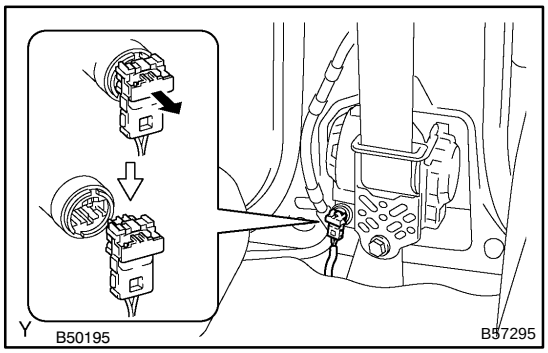

(c) Disconnect the connector.

(1) Using a screwdriver, pull the locking button of the pretensioner connector to your side to release the lock.

HINT:

Tape the screwdriver tip before use.

(d) Remove the 2 bolts and the front seat outer belt assembly.

11. REMOVE FRONT SEAT INNER BELT ASSY RH

(a) Disconnect the connector and clamp.

(b) TMC made:

Remove the bolt and the front seat inner belt assembly.

(c) TMMK made:

Remove the nut and the front seat inner belt assembly.

12. INSTALL FRONT SEAT INNER BELT ASSY RH

(a) TMC made:

Install the front seat inner belt assembly with the bolt.

Torque: 42 N·m (420 kgf·cm, 31 ft·lbf)

(b) TMMK made:

Install the front seat inner belt assembly with the nut.

Torque: 42 N·m (420 kgf·cm, 31 ft·lbf)

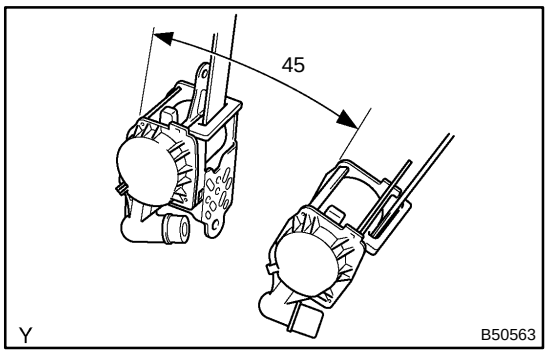

13. INSTALL FRONT SEAT OUTER BELT ASSY RH

(a) Check the degree of tilt when beginning to lock the ELR.
  (1) Make sure that the belt cannot be pulled out by over 45 degrees of tilt.

NOTICE:

Do not disassemble the retractor.

(b) Install the retractor with the 2 bolts.
  Torque:
  7.5 N·m (80 kgf·cm, 66 in.·lbf) (Upper part of retractor)
  42 N·m (420 kgf·cm, 31 ft·lbf) (Lower part of retractor)

(c) Install the shoulder anchor with the nut.
  Torque: 42 N·m (420 kgf·cm, 31 ft·lbf)

(d) Install the floor anchor with the bolt.
  Torque: 42 N·m (420 kgf·cm, 31 ft·lbf)

(e) Check the ELR lock.
  (1) Check that the seat belt is locked when the seat belt is pulled out quickly with the seat belt installed in the vehicle.

6109J−02

DISPOSAL

HINT:

When scrapping vehicles equipped with a seat belt pretensioner or disposing of a front seat outer belt (with seat belt pretensioner) always first active the seat belt pretensioner in accordance with the procedures described below. If any abnormality occurs in the seat belt pretensioner operation, contact the SERVICE DEPT. of the TOYOTA MOTOR SALES, U.S.A., INC. When disposing of a front seat outer belt (with seat belt pretensioner) activated in a collision, follow the same procedures given in step 1−(d) in DISPOSAL.

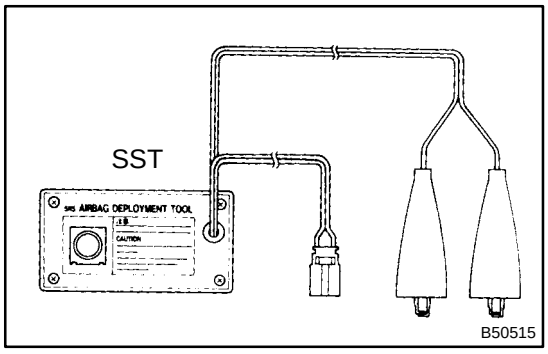

CAUTION:

- **Never dispose of front seat outer belt which has an inactivated pretensioner.**
- **The seat belt pretensioner produces a sizeable exploding sound when it activates, so perform operation out−of−door and where it will not create a nuisance to nearby residents.**
- **When activating a front seat outer belt (with seat belt pretensioner), perform the operation at least 10 m (33 ft) away from the front seat outer belt.**
- **Use gloves and safety glasses when handling a front seat belt with an activated pretensioner.**
- **Always wash your hands with water after completing operation.**
- **Do not apply water, etc. to a front seat outer belt with an activated pretensioner.**
- **When activating the seat belt pretensioner, always use the specified SST. (09062−00700, 09082−00770) (SRS Airbag Deployment Tool) Perform the operation in a place away from electrical noise.**

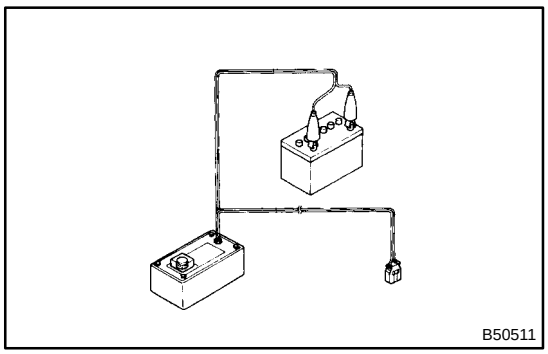

1. DISPOSE OF FRONT SEAT OUTER BELT ASSY RH (WHEN SCRAPPING VEHICLE DEPLOYMENT METHOD)

HINT:

Check that the battery positive voltage is above 12 V.

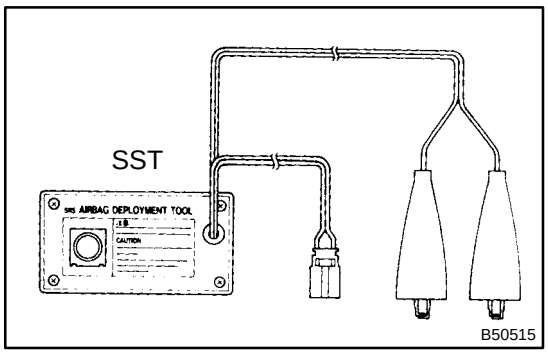

(a) Check functioning of SST.

CAUTION:
When activating the seat belt pretensioner, always use a specified SST.

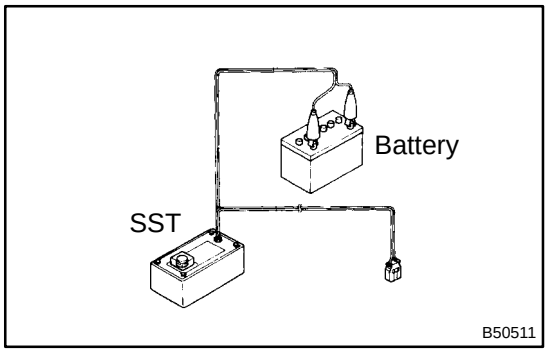

(1) Connect the SST to the battery.
Connect the red clip of the SST to the battery positive (+) terminal and the black clip to the battery negative (−) terminal.

HINT:
Do not connect the yellow connector which will be connected to the seat belt pretensioner.

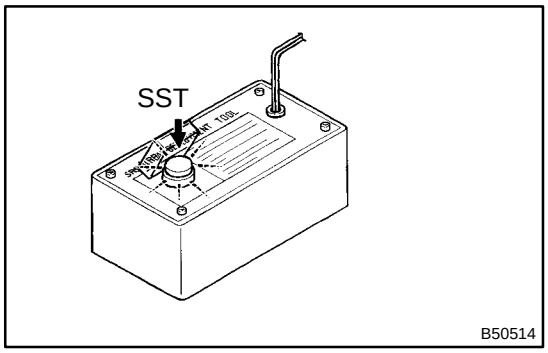

(2) Check the functioning of SST.
Press SST activation switch, and check that the LED of SST activation switch lights up.

CAUTION:
If the LED lights up when the activation switch is not pressed, SST probably malfunctions, so definitely do not use SST.

(b) Disconnect the pretensioner connector.
(1) Remove the front door scuff plate RH (See page 76−22).
(2) Remove the rear door scuff plate RH (See page 76−22).
(3) Remove the front door opening trim weather strip RH (See page 76−22).
(4) Remove the rear door opening trim weather strip RH (See page 76−22).
(5) Remove the center pillar garnish lower RH (See page 76−22).
(6) Remove the center pillar garnish upper RH (See page 76−22).

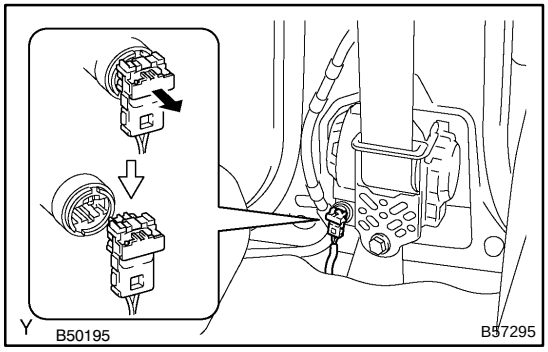

(7) Disconnect the pretensioner connector as shown in the illustration.
(8) Install the floor anchor of the seat belt.

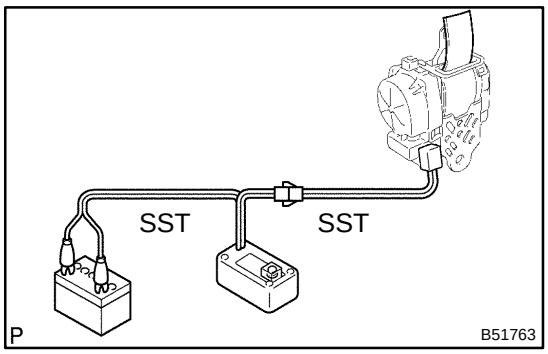

(c) Install SST.
(1) Connect 2 SST, then connect them to the seat belt pretensioner.

NOTICE:

To avoid damaging SST connector and wire harness, do not lock the secondary lock of the twin lock.

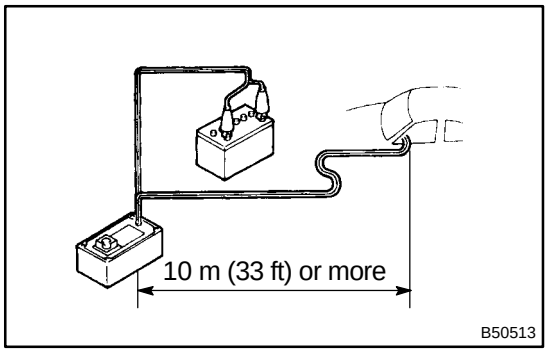

(2) Move SST at least 10 m (33 ft) away from the front of the vehicle.
(3) Close all the doors and windows of the vehicle.

NOTICE:

Take care not to damage the SST wire harness.

(4) Connect SST red clip to the battery positive (+) terminal and the black clip to the negative (−) terminal.

(d) Activate the seat belt pretensioner.
(1) Confirm that no one is inside the vehicle or within 10 m (33 ft) area around the vehicle.
(2) Press SST activation switch and activate the seat belt pretensioner.

HINT:

The seat belt pretensioner operates simultaneously with the LED of SST activation switch lighting up.

(e) Dispose of the front seat outer belt (with seat belt pretensioner).

CAUTION:

- **The rear outer belt is very hot when the seat belt pretensioner is activated, so leave it alone for at least 30 minutes after activation.**
- **Use gloves and safety glasses when handling a front seat outer belt with activated seat belt pretensioner.**
- **Always wash your hands with water after completing the operation.**
- **Do not apply water, etc. to a front seat outer belt with activated seat belt pretensioner.**

HINT:

When scrapping a vehicle, activate the seat belt pretensioner and scrap the vehicle with the activated front seat outer belt being installed.

2. DISPOSE OF FRONT SEAT OUTER BELT ASSY RH (WHEN DISPOSING OF AIRBAG ASSEMBLY DEPLOYMENT METHOD)

NOTICE:

- **When disposing of a front seat outer belt (with seat belt pretensioner) only, never use the customer's vehicle to activate the seat belt pretensioner.**
- **Be sure to follow the procedures given on the next page when activating the seat belt pretensioner.**

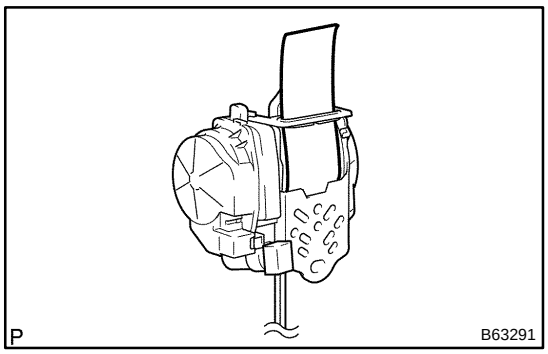

(a) Remove the front seat outer belt (See page 61−5).

HINT:

Cut the belt near the seat belt retractor.

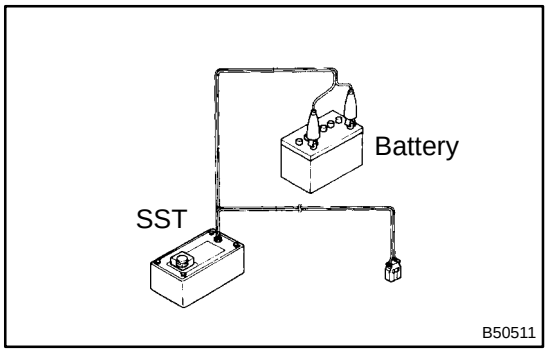

(b) Check functioning of SST (See step 1−(a)).

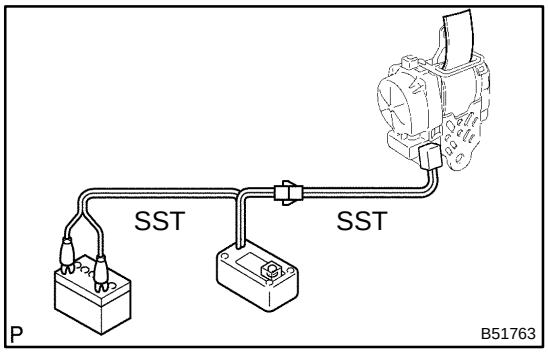

(c) Install SST.

(1) Connect 2 SST, then connect them to the seat belt pretensioner.

NOTICE:

To avoid damaging SST connector and wire harness, do not lock the secondary lock of the twin lock.

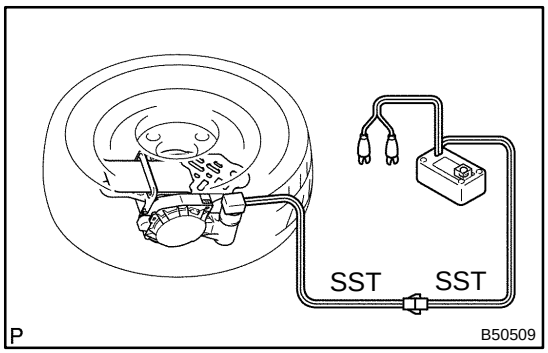

(2) Place the front seat outer belt on the ground and cover it with the disc wheel with tire.

NOTICE:

Place the front seat outer belt as shown in the illustration.

(3) Move SST at least 10 m (33 ft) away from the wheel disc.

NOTICE:

Take care not to damage SST wire harness.

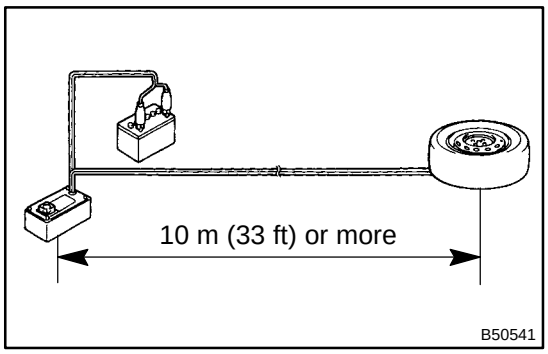

(d) Activate the seat belt pretensioner.
  (1) Connect SST red clip to the battery positive (+) terminal and black clip to the battery negative (−) terminal.
  (2) Check that no one is within 10 m (33 ft) area around the disc wheel.
  (3) Press SST activation switch and activate the seat belt pretensioner.

HINT:
The seat belt pretensioner operates simultaneously with the LED of SST activation switch lighting up.

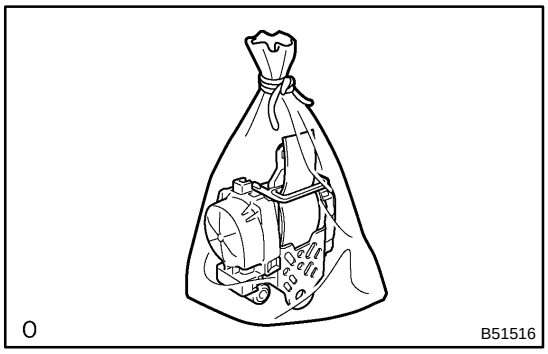

(e) Dispose of the front seat outer belt (with seat belt pretensioner).
  (1) Remove the disc wheel and SST.
  (2) Place the front seat outer belt in a vinyl bag, tie the end tightly and dispose of it in the same way as other general parts.

REAR SEAT BELT

COMPONENTS

61056−03

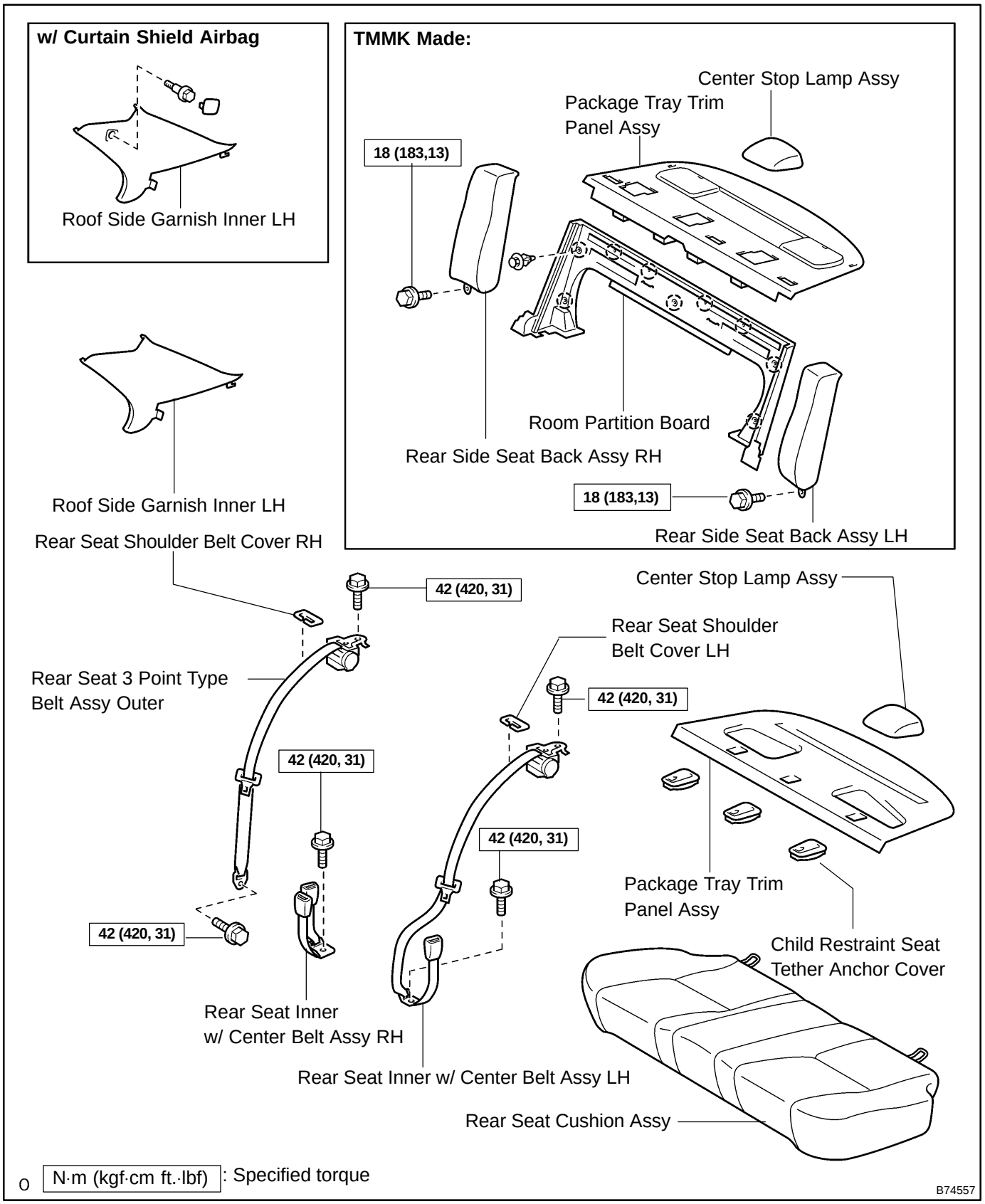

REAR SEAT BELT (TMC MADE)

61057−04

REPLACEMENT

HINT:

- The installation is in the reverse order of the removal. However, when there is a special point concerning the installation, it is indicated.
- On the RH side, use the same procedures as on the LH side.

1. REMOVE REAR SEAT CUSHION ASSY (See page 72−32)

2. REMOVE ROOF SIDE GARNISH INNER RH(See page 76−22)

3. REMOVE ROOF SIDE GARNISH INNER LH(See page 76−22)

4. REMOVE CENTER STOP LAMP ASSY (See page 65−22)

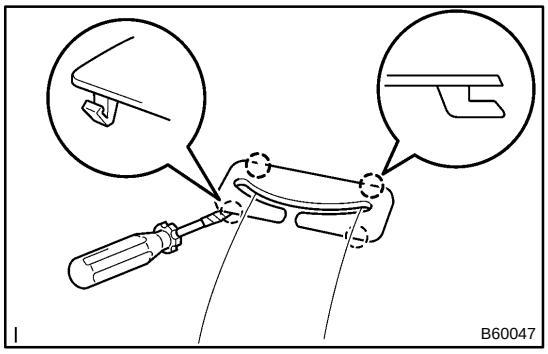

5. REMOVE REAR SEAT SHOULDER BELT COVER RH

(a) Using a screwdriver, disengage the claws in the front side.

HINT:

Tape the screwdriver tip before use.

(b) Pull out the shoulder belt cover to the front side to disengage the claws.

(c) Pull out the shoulder belt from the slit to remove the shoulder belt cover.

6. REMOVE REAR SIDE SEAT BACK ASSY RH (See page 72−32)

7. REMOVE REAR SIDE SEAT BACK ASSY LH (See page 72−32)

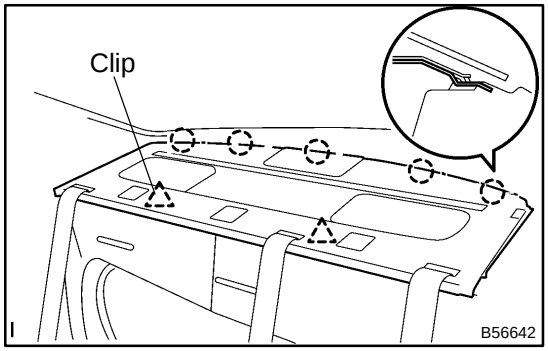

8. REMOVE PACKAGE TRAY TRIM PANEL ASSY

(a) Remove the 3 bolts and floor anchor of the seat belt.

(b) Disengage the clips and claws and pull out the belt to remove the package tray trim.

9. REMOVE REAR SEAT 3 POINT TYPE BELT ASSY OUTER

(a) Remove the bolt in the retractor, and disengage the claws of the stopper to remove the rear seat belt assembly outer.

10. REMOVE REAR SEAT INNER W/CENTER BELT ASSY RH

(a) Remove the bolt, and disengage the claws of the stopper to remove the rear seat inner with center belt assembly RH.

11. REMOVE REAR SEAT INNER W/CENTER BELT ASSY LH

(a) Remove the bolt in the retractor, and remove the rear seat inner with center belt assembly LH.

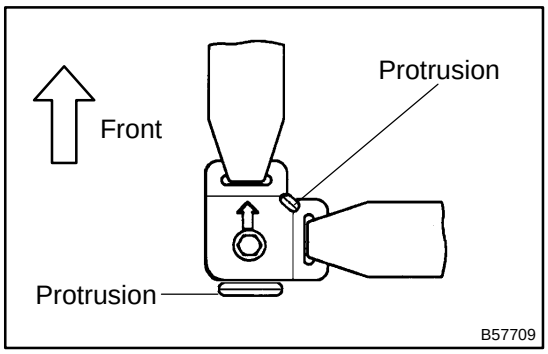

12. INSTALL REAR SEAT INNER W/CENTER BELT ASSY RH

(a) Install the floor anchor with the bolt.
Torque: 42 N·m (420 kgf·cm, 31 ft·lbf)

NOTICE:
Take care for the anchor not to run onto the protrusion part of the floor panel.

13. INSTALL REAR SEAT 3 POINT TYPE BELT ASSY OUTER

(a) Install the retractor with the bolt.
Torque: 42 N·m (420 kgf·cm, 31 ft·lbf)

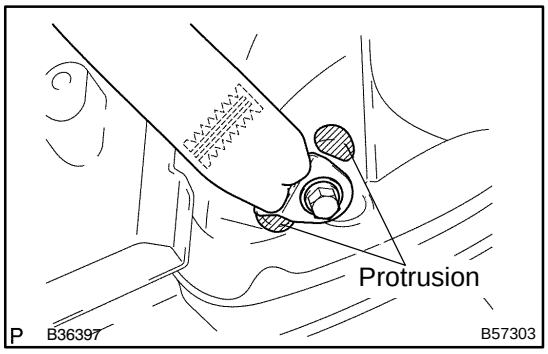

(b) Install the anchor of the rear seat 3 point type belt assembly outer RH with the bolt.
Torque: 42 N·m (420 kgf·cm, 31 ft·lbf)

NOTICE:
Take care for the anchor not to run onto the protrusion part of the floor panel.

(c) Check the degree of tilt when the belt begins to lock the ELR.
  (1) Check the degree in the same way as the rear seat inner with center belt assembly RH.

(d) Check the ELR lock.
  (1) Check that the belt will lock when pulling out the belt quickly with the belt installed.

(e) Check the fastening function for child restraint system.
  (1) Check the function in the same way as the rear seat inner with center belt assembly RH.

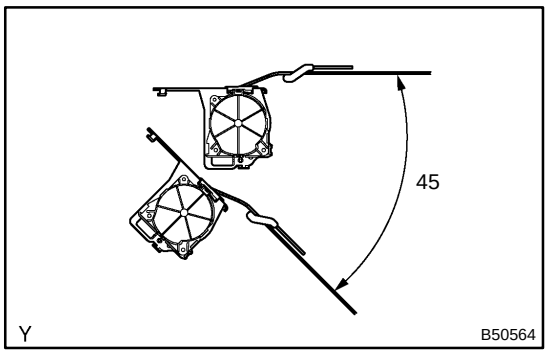

14. INSTALL REAR SEAT INNER W/CENTER BELT ASSY LH

(a) Check the degree of tilt when the belt begins to lock the ELR.
  (1) Check the belt will not lock within 15 degrees of tilt in all the direction but the belt will lock over 45 degrees of tilt when moving the installed retractor gently.

(b) Install the retractor with the bolt.
  Torque: 42 N·m (420 kgf·cm, 31 ft·lbf)

(c) Check the ELR lock.
  (1) Check that the belt will lock when pulling out the belt quickly with the belt installed.

(d) Check the fastening function for child restraint system.

NOTICE:

Check should be done with the assembly installed.
  (1) Check that the belt cannot be pulled out any more but can be rewound after the belt is fully pulled out.
  (2) Check that the belt can be pulled out and rewound after the belt is fully rewound.

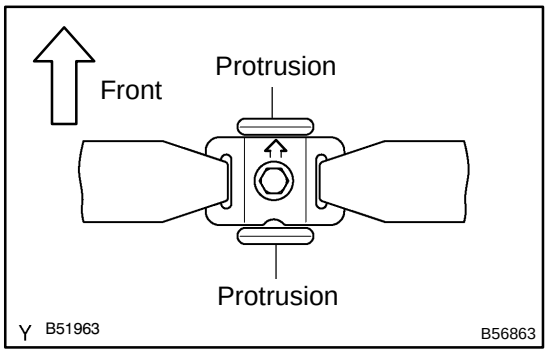

(e) Install the floor anchor with the bolt, directing an arrow mark on the plate to the vehicle's front direction.
  Torque: 42 N·m (420 kgf·cm, 31 ft·lbf)

NOTICE:

Take care for the anchor not to run onto the protrusion part of the floor panel.

(f) Check the ELR lock.
  (1) Check that the belt will lock when pulling out the belt quickly with the belt installed.

REAR SEAT BELT (TMMK MADE)

61058−04

REPLACEMENT

HINT:

- The installation is in the reverse order of the removal. However, when there is a special point concerning the installation, it is indicated.
- On the RH side, use the same procedures as on the LH side.

1. REMOVE REAR SEAT CUSHION ASSY (See page 72−32)
2. REMOVE ROOF SIDE GARNISH INNER RH (See page 76−22)
3. REMOVE ROOF SIDE GARNISH INNER LH (See page 76−22)
4. REMOVE CENTER STOP LAMP ASSY (See page 65−22)

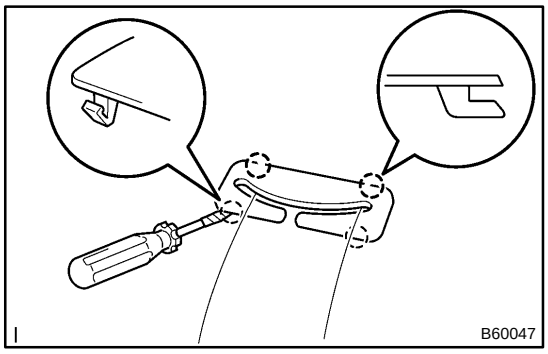

5. REMOVE REAR SEAT SHOULDER BELT COVER RH

(a) Using a screwdriver, disengage the claws in the front side.

HINT:

Tape the screwdriver tip before use.

(b) Pull out the shoulder belt cover to the front side to disengage the claws.

(c) Pull out the shoulder belt from the slit to remove the shoulder belt cover.

6. REMOVE REAR SIDE SEAT BACK ASSY RH (See page 72−32)
7. REMOVE REAR SIDE SEAT BACK ASSY LH (See page 72−32)

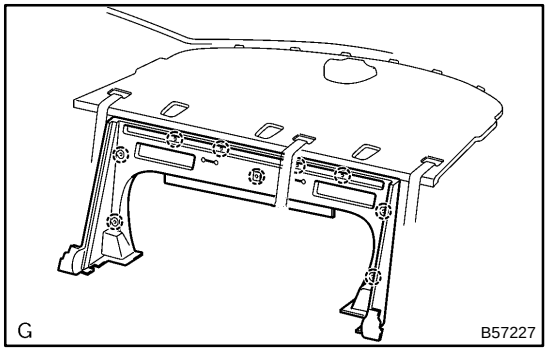

8. REMOVE ROOM PARTITION BOARD ASSY

(a) Remove the 9 clips and room partition board.

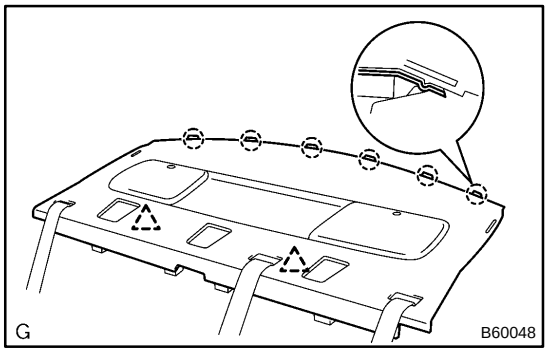

9. REMOVE PACKAGE TRAY TRIM PANEL ASSY

(a) Remove the 3 bolts and floor anchor of the seat belt.

(b) Disengage the clips and claws and pull out the belt to remove the package tray trim.

10. REMOVE REAR SEAT 3 POINT TYPE BELT ASSY OUTER

(a) Remove the bolt in the retractor, and disengage the claws of the stopper to remove the rear seat belt assembly outer.

11. REMOVE REAR SEAT INNER W/CENTER BELT ASSY RH

(a) Remove the bolt, and disengage the claws of the stopper to remove the rear seat inner with center belt assembly RH.

12. REMOVE REAR SEAT INNER W/CENTER BELT ASSY LH

(a) Remove the bolt in the retractor, and remove the rear seat inner with center belt assembly LH.

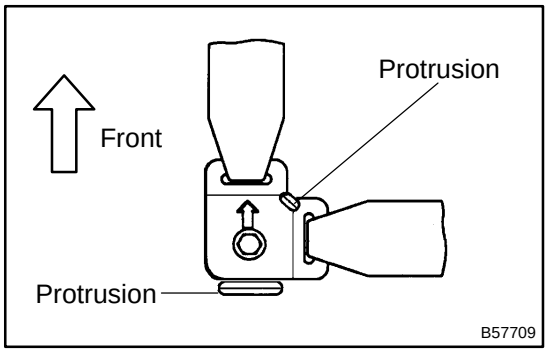

13. INSTALL REAR SEAT INNER W/CENTER BELT ASSY RH

(a) Install the floor anchor with the bolt.
Torque: 42 N·m (420 kgf·cm, 31 ft·lbf)

NOTICE:
Take care for the anchor not to run onto the protrusion part of the floor panel.

14. INSTALL REAR SEAT 3 POINT TYPE BELT ASSY OUTER

(a) Install the retractor with the bolt.
Torque: 42 N·m (420 kgf·cm, 31 ft·lbf)

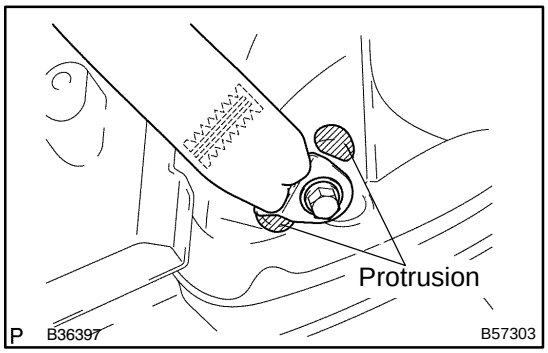

(b) Install the anchor of the rear seat 3 point type belt assembly outer RH with the bolt.
Torque: 42 N·m (420 kgf·cm, 31 ft·lbf)

NOTICE:
Take care for the anchor not to run onto the protrusion part of the floor panel.

(c) Check the degree of tilt when the belt begins to lock the ELR.
  (1) Check in the same way as the rear seat inner with center belt assembly RH.

(d) Check the ELR lock.
  (1) Check the degree that the belt will lock when pulling out the belt quickly with the belt installed.

(e) Check the fastening function for child restraint system.
  (1) Check the function in the same way as the rear seat inner with center belt assembly RH.

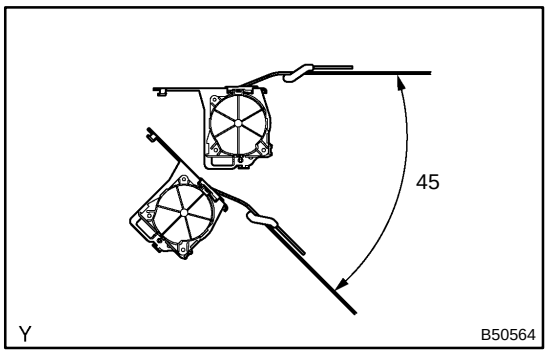

15. INSTALL REAR SEAT INNER W/CENTER BELT ASSY LH

(a) Check the degree of tilt when the belt begins to lock the ELR.
  (1) Check the belt will not lock within 15 degrees of tilt in all the direction but the belt will lock over 45 degrees of tilt when moving the installed retractor gently.

(b) Install the retractor with the bolt.
Torque: 42 N·m (420 kgf·cm, 31 ft·lbf)

(c) Check the ELR lock.
  (1) Check that the belt will lock when pulling out the belt quickly with the belt installed.

(d) Check the fastening function for child restraint system.

NOTICE:
Check should be done with the assembly installed.
  (1) Check that the belt cannot be pulled out any more but can be rewound after the belt is fully pulled out.
  (2) Check that the belt can be pulled out and rewound after the belt is fully rewound.

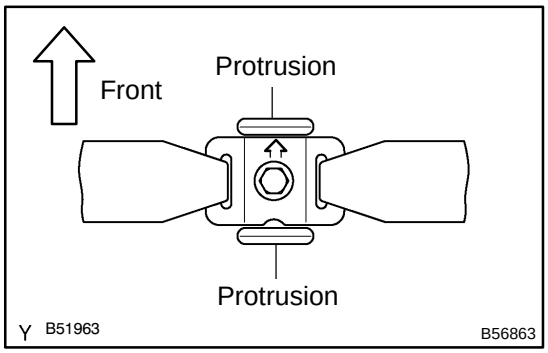

(e) Install the floor anchor with the bolt, directing an arrow mark on the plate to the vehicle's front direction.
Torque: 42 N·m (420 kgf·cm, 31 ft·lbf)

NOTICE:
Take care for the anchor not to run onto the protrusion part of the floor panel.

(f) Check the ELR lock.
  (1) Check that the belt will lock when pulling out the belt quickly with the belt installed.

LIGHTING SYSTEM

650BI−02

PRECAUTION

1. PRECAUTION OF HEADLIGHT BULB REPLACEMENT

(a) If the adhered oil is left unremoved from the halogen lamp surface, the lamp service life is shortened as it becomes hot when it is turned on.

(b) Since the internal pressure of a halogen lamp is high, dropping, hitting or damaging the bulb may cause the glass to scatter. Therefore, handle it with great care.

(c) When replacing bulbs, do not remove until a new bulb is prepared.
Because if it is left being removed for a long period of time, the lens may be covered with dirt or moisture.

(d) For replacement, be sure to use a bulb of the same watt.

(e) Firmly reinstall the socket after bulb replacement. Otherwise, cloudy lens or invasion by water will be caused.

650BJ−02

ON−VEHICLE INSPECTION

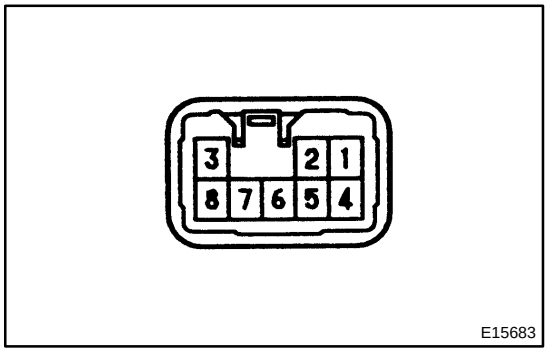

1. INSPECT TURN SIGNAL FLASHER CIRCUIT

(a) Measure voltage between terminal as shown in the chart below.

Tester connection	Condition	Specified condition
7 − Ground	Constant	Continuity
1 − Ground	Turn igniton switch ON	Battery positive voltage
1 − Ground	Turn igniton switch OFF	No voltage
4 − Ground	Constant	Battery positive voltage

(b) Connect the connector to turn signal flasher and inspect the wire harness side connector from the back side as shown in the chart below.

Tester connection	Condition	Specified condition
2 − Ground	Hazard switch OFF → ON	0V → 10 − 14 V (60 to 120 time per minutes)
2 − Ground	Turn signal switch (right turn) OFF → ON	0V → 10 − 14 V (60 to 120 time per minutes)
3 − Ground	Hazard switch OFF → ON	0V → 10 − 14 V (60 to 120 time per minutes)
3 − Ground	Turn signal switch (left turn) OFF → ON	0V → 10 − 14 V (60 to 120 time per minutes)
5 − Ground	Turn signal switch (left turn) OFF → ON	10 − 14 V → 0 V
6 − Ground	Turn signal switch (right turn) OFF → ON	10 − 14 V → 0 V
8 − Ground	Hazard switch OFF → ON	10 − 14 V → 0 V

INSPECTION

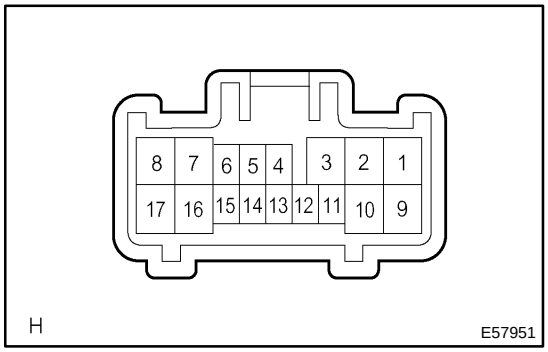

1. HEADLAMP DIMMER SWITCH ASSY

(a) Inspect light control switch continuity.

(1) Check that there is continuity between terminals at each switch position as shown in the chart.

Switch operation	Tester connection	Specified condition
OFF	−	No continuity
TAIL	14 − 16	Continuity
HEAD	13 − 16 − 14	Continuity

(b) Inspect headlamp dimmer switch continuity.

(1) Check that there is continuity between terminals at each switch position as shown in the chart.

Switch operation	Tester connection	Specified condition
FLASH	7 −8 − 16	Continuity
LOW BEAM	16 − 17	Continuity
HI BEAM	7 − 16	Continuity

(c) Inspect turn signal switch continuity.

(1) Check that there is continuity between terminals at each switch position as shown in the chart.

Switch operation	Tester connection	Specified condition
Right turn	2 − 3	Continuity
Neutral	−	No continuity
Left turn	1 − 2	Continuity

(d) Inspect front fog light switch continuity.

(1) Check that there is continuity between terminals at each switch position as shown in the chart.

Switch operation	Tester connection	Specified condition
OFF	−	No continuity
ON	10 − 11	Continuity

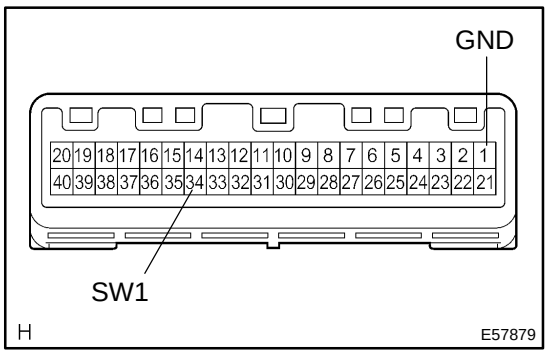

2. HEATER CONTROL HOUSING SUB−ASSY

(a) Auto A/C:

Inspect hazard warning signal switch.

Switch operation	Tester connection	Specified condition
OFF	1 − 34	No continuity
ON	1 − 34	Continuity

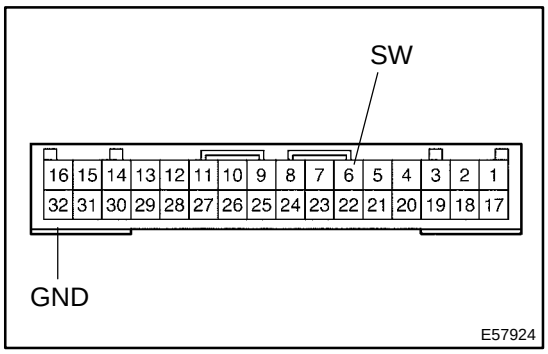

(b) Manual A/C:
Inspect hazard warning signal switch.

Switch operation	Tester connection	Specified condition
OFF	6 − 32	No continuity
ON	6 − 32	Continuity

3. BACK UP LAMP SWITCH ASSY

(a) Inspect back−up lamp switch continuity.
(1) Check that there is continuity between terminals upon switch operation.
Standard:
OFF (When ball is not pressed): No continuity
ON (When ball is pressed): Continuity

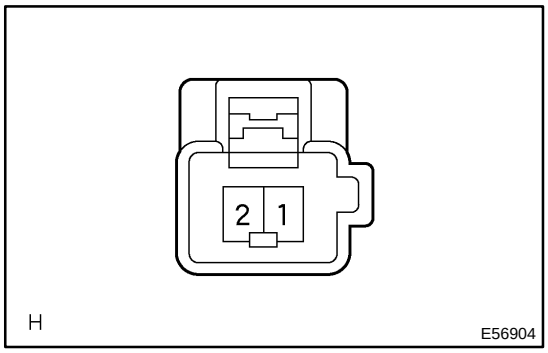

4. LUGGAGE COMPARTMENT DOOR LOCK ASSY

(a) Inspect luggage compartment door courtesy lamp switch continuity.
(1) Check that there is continuity between terminal 2 and body ground when switch is operated.
Standard:
ON (When shaft is pressed): No continuity
OFF (When shaft is not pressed): Continuity

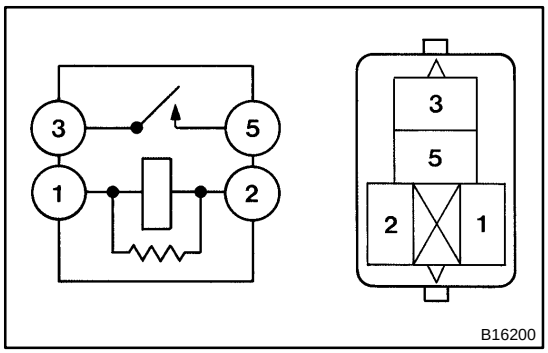

5. FOG LAMP RELAY

(a) Inspect relay continuity.

Condition	Tester connection	Specified condition
Constant	1 − 2	Continuity
Apply B+ between terminals 1 and 2.	3 − 5	Continuity

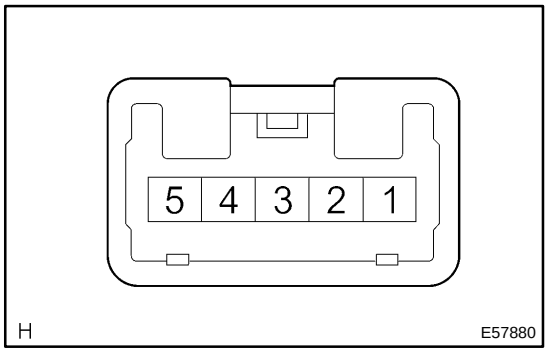

6. ROOF CONSOLE BOX ASSY

(a) Inspect map lamp continuity.
(1) Check that there is continuity between terminal 1 and 5 when switch is operated.
Standard:
ON: Continuity
OFF: No continuity

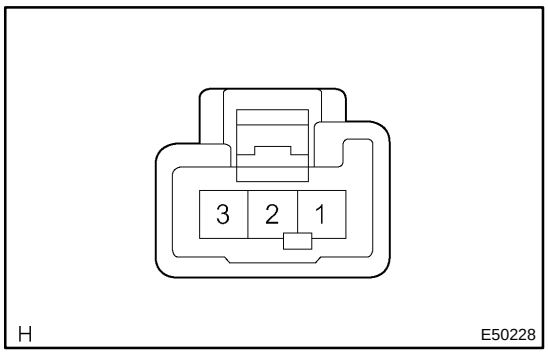

7. ROOM LAMP ASSY NO.1

(a) Inspect room lamp assy No. 1 continuity.

(1) Check that there is continuity between terminals at each switch position as shown in the chart.

Standard:

Switch operation	Tester connection	Specified condition
OFF	−	No continuity
DOOR	1 − 2	Continuity
*1 ON	2 − 3	Continuity
*2 ON	1 − 3	Continuity

*1: TMMK Made

*2: TMC Made

8. GLOVE BOX LAMP ASSY

(a) Inspect glove box lamp assy continuity.

(1) Check that there is continuity between terminals when switch is operated.

Standard:

ON (When shaft is pressed): No continuity

OFF (When shaft is not pressed): Continuity

9. LUGGAGE COMPARTMENT LAMP ASSY NO.1

(a) Inspect luggage compartment lamp assy No. 1.

(b) Check that there is continuity between terminals when switch is operated.

Standard:

ON: Continuity

OFF No continuity

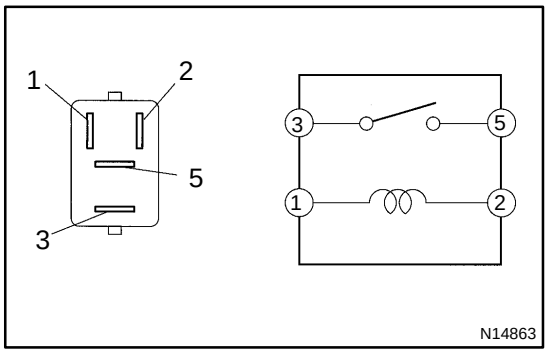

10. TAIL LAMP RELAY

(a) Inspect relay continuity.

Condition	Tester connection	Specified condition
Constant	1 − 2	Continuity
Apply B+ between terminal 1 and 2	3 − 5	Continuity

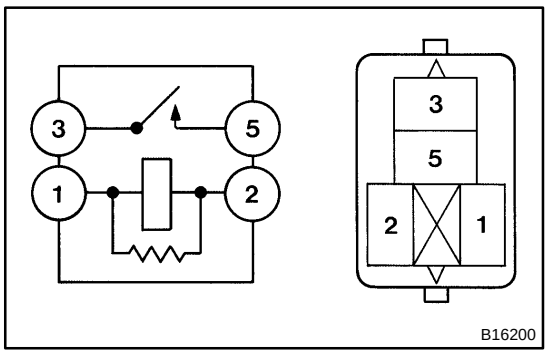

11. DAY TIME RUNNING LIGHT RELAY NO.2

(a) Inspect relay continuity.

Condition	Tester connection	Specified condition
Constant	1 − 2	Continuity
Apply B+ between terminal 1 and 2	3 − 5	Continuity

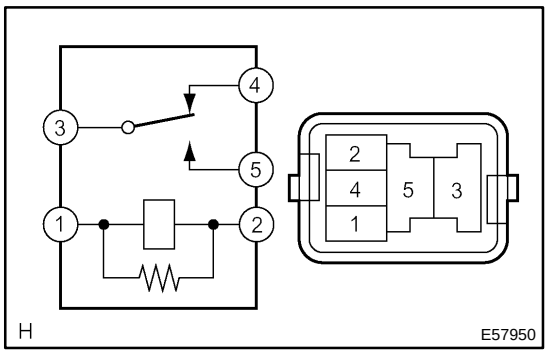

12. RUNNING LIGHT RELAY

(a) Inspect relay continuity.

Condition	Tester connection	Specified condition
Constant	1 − 3, 2 − 4	Continuity
Apply B+ between terminal 1 and 3	4 − 5	Continuity

HEADLAMP ASSY LH

COMPONENTS

651AL−01

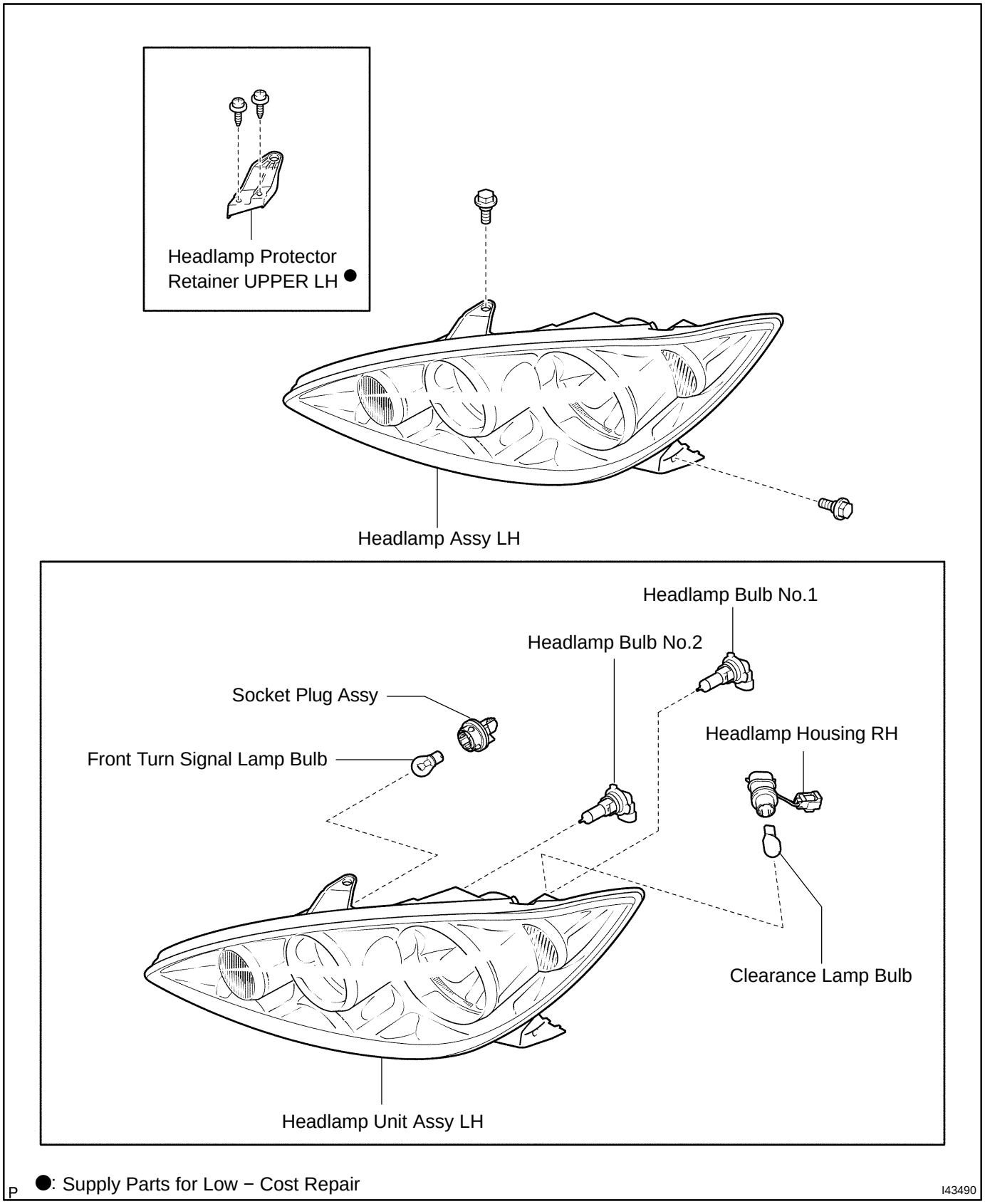

P ●: Supply Parts for Low − Cost Repair

I43490

651AM−01

OVERHAUL

HINT:

- COMPONENTS: SEE PAGE 65−7.
- Use the same procedures for the RH side and LH side.
- The procedures listed below are for the LH side.
- Installation is in the reverse order of removal.

1. REMOVE FRONT BUMPER ASSY (SEE PAGE 76−2)

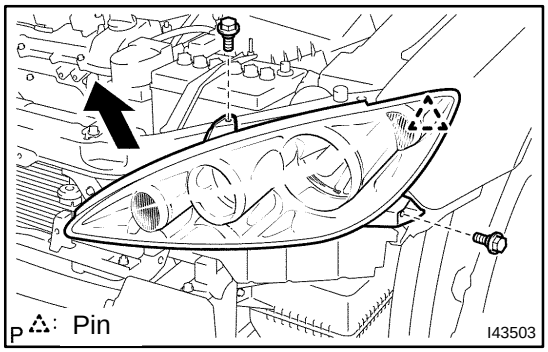

2. REMOVE HEADLAMP ASSY LH

(a) Remove the 2 bolts and disengage the pin.

(b) Pull the headlamp assy LH in the direction indicated by the arrow and remove the headlamp assy LH.

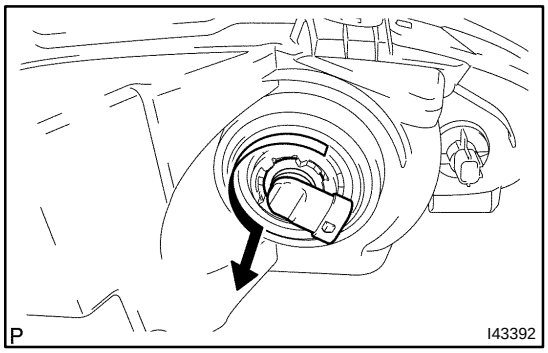

3. REMOVE HEADLAMP, NO.2 BULB

(a) Turn in the direction indicated by the arrow and remove the headlamp, No.2 bulb.

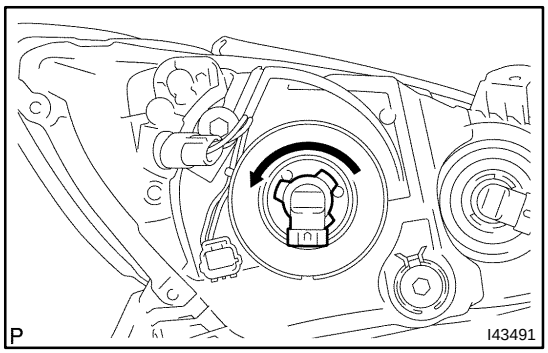

4. REMOVE HEADLAMP, NO.1 BULB

(a) Turn in the direction indicated by the arrow and remove the headlamp, No.1 bulb.

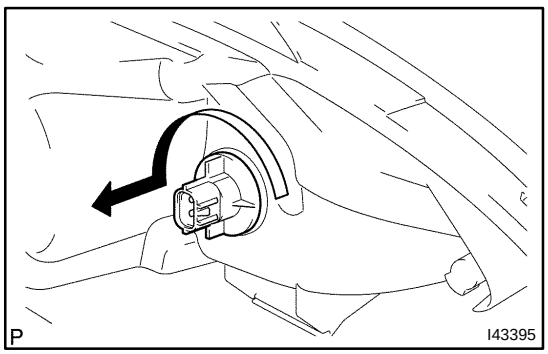

5. REMOVE FRONT TURN SIGNAL LAMP BULB

(a) Turn in the direction indicated by the arrow and remove the socket plug assy and the front turn signal lamp bulb as a unit.

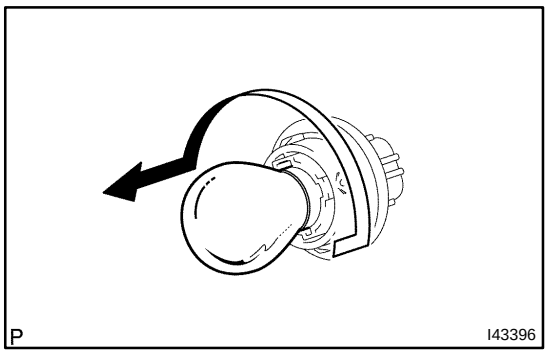

(b) Turn in the direction indicated by the arrow and remove the front turn signal lamp bulb.
(c) Remove the socket plug assy.

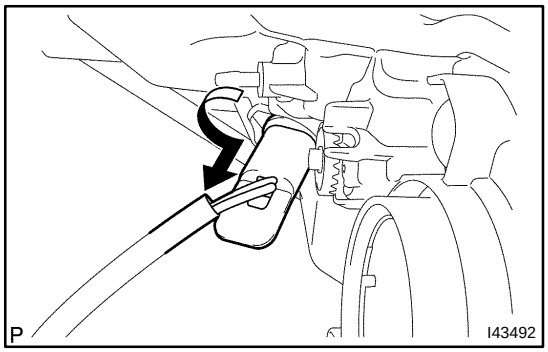

6. REMOVE CLEARANCE LAMP BULB

(a) Turn in the direction indicated by the arrow and remove the headlamp housing RH and the clearance lamp bulb as a unit.
(b) Remove the clearance lamp bulb from the headlamp housing RH.

7. VEHICLE PREPARATION FOR HEADLAMP AIM ADJUSTMENT (SEE PAGE 65−10)
8. PREPARATION FOR HEADLAMP AIMING (Using a screen) (SEE PAGE 65−10)
9. HEADLAMP AIMING INSPECTION (SEE PAGE 65−10)
10. HEADLAMP AIMING ADJUSTMENT (SEE PAGE 65−10)
11. VEHICLE PREPARATION FOR FOG LAMP AIM ADJUSTMENT (SEE PAGE 65−17)
12. PREPARATION FOR FOG LAMP AIMING (SEE PAGE 65−17)
13. FOG LAMP AIMING INSPECTION (SEE PAGE 65−17)
14. FOG LAMP AIMING ADJUSTMENT (SEE PAGE 65−17)

651AN−01

ADJUSTMENT

1. VEHICLE PREPARATION FOR HEADLAMP AIM ADJUSTMENT

(a) Prepare the vehicle:

- Ensure there is no damage or deformation to the body around the headlamps.
- Fill the fuel tank.
- Make sure that the oil is filled to the specified level.
- Make sure that the coolant is filled to the specified level.
- Inflate the tires to the appropriate pressure.
- Place the spare tire, tools, and jack in their original positions.
- Unload the trunk.
- Sit a person of average weight (68 kg, 150 lb) in the driver's seat.

2. PREPARATION FOR HEADLAMP AIMING (Using a tester)

(a) Prepare the vehicle for headlamp aim check.

(b) Adjust in accordance with headlamp tester instructions.

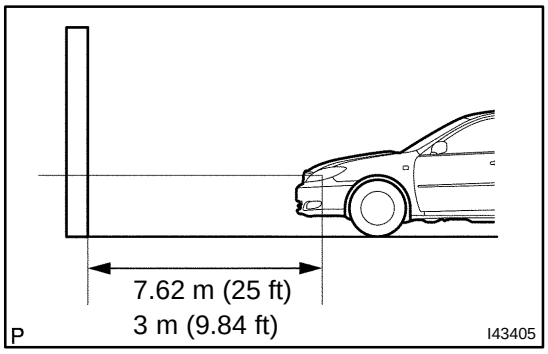

3. PREPARATION FOR HEADLAMP AIMING (Using a screen)

(a) Prepare the vehicle according to the following conditions:

- Place the vehicle in a location that is dark enough to clearly observe the cutoff line. The cutoff line is a distinct line, below which light from the headlamps can be observed and above which it cannot.
- Place the vehicle at a 90 angle to the wall.
- Create a 7.62 m (25 ft) distance between the vehicle (headlamp bulb center) and the wall.
- Place the vehicle on a level surface.
- Bounce the vehicle up and down to settle the suspension.

NOTICE:

A distance of 7.62 m (25 ft) between the vehicle (headlamp bulb center) and the wall is necessary for proper aim adjustment. If unavailable, secure a distance of exactly 3 m (9.84 ft) for check and adjustment. (The target zone will change with the distance so follow the instructions in the illustration.)

(b) Prepare a piece of thick white paper (approximately 2 m (6.6 ft) (height) x 4 m (13.1 ft) (width)) to use as a screen.

(c) Draw a vertical line down the center of screen (V line).

(d) Set the screen as shown in the illustration.

HINT:

- Stand the screen perpendicular to the ground.
- Align the V line on the screen with the center of the vehicle.

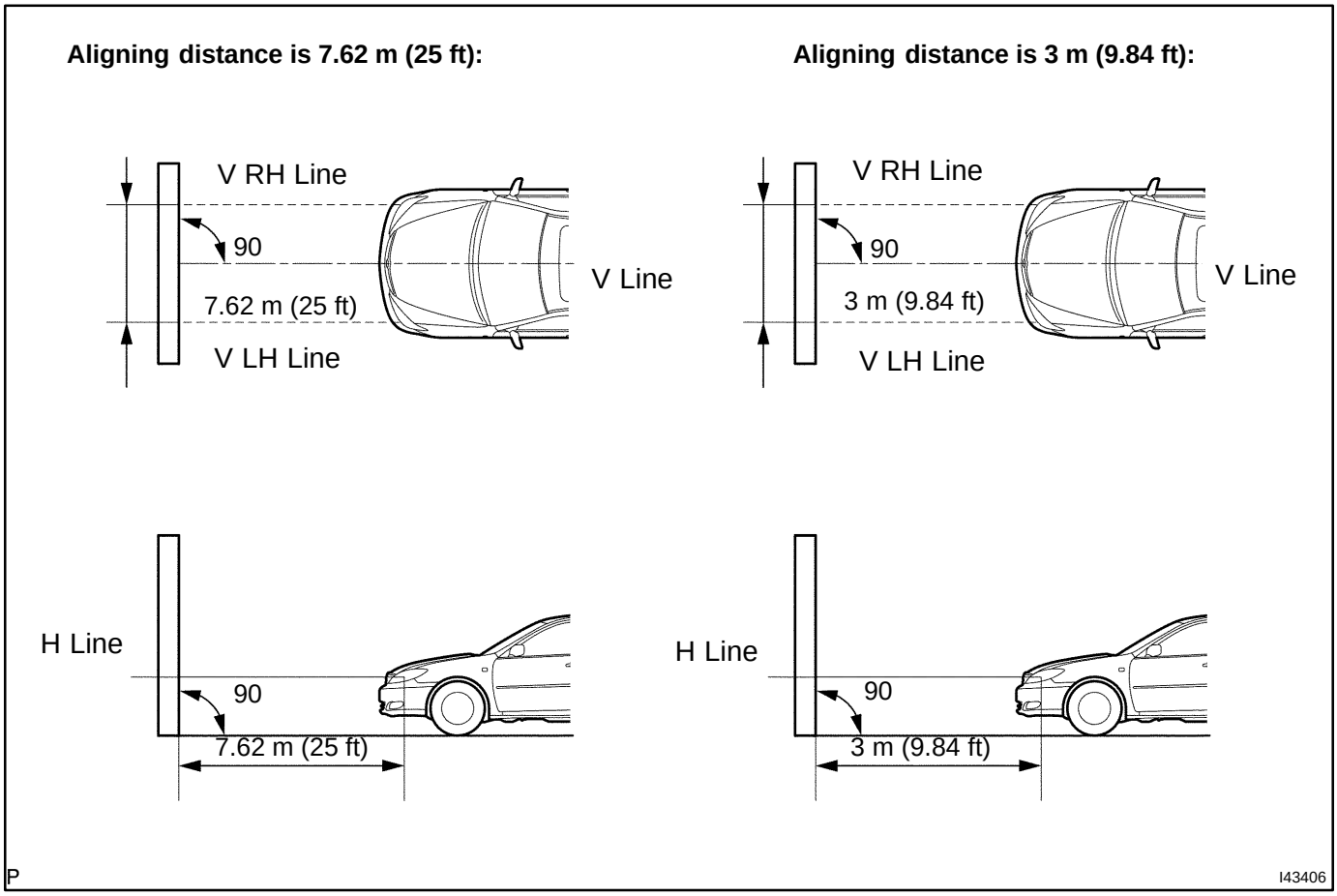

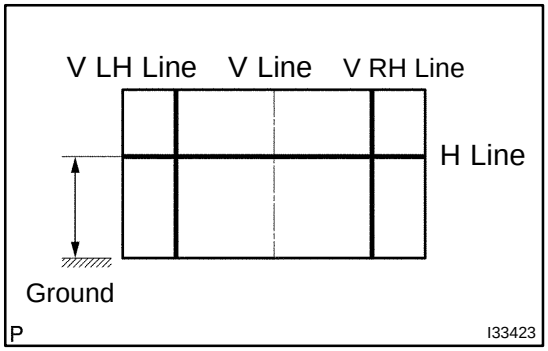

(e) Draw base lines (H line, V LH, V RH lines) on the screen as shown in the illustration.

HINT:

- The base lines differ for ”low−beam inspection” and ”high−beam inspection”.
- Mark the headlamp bulb center marks on the screen. If the center mark cannot be observed on the headlamp, use the center of the headlamp bulb or the manufacturer’s name marked on the headlamp as the center mark.
  (1) H Line (Headlamp height):
  Draw a horizontal line across the screen so that it passes through the center marks. The H line should be at the same height as the headlamp bulb center marks of the low−beam headlamps.
  (2) V LH Line, V RH Line (Center mark position of left−hand (LH) and right−hand (RH) headlamps):
  Draw two vertical lines so that they intersect the H line at each center mark (aligned with the center of the low−beam headlamp bulbs).

4. HEADLAMP AIMING INSPECTION

(a) Cover or disconnect the connector of the headlamp on the opposite side to prevent light from the headlamp not being inspected from affecting headlamp aiming inspection.

NOTICE:

Do not keep the headlamp covered for more than 3 minutes. The headlamp lens is made of synthetic resin, and may easily melt or be damaged due to heat.

HINT:

When checking the aim of the high−beam, cover the low−beam or disconnect the connector.

(b) Start the engine.

NOTICE:

Engine rpm must be 1,500 or more.

(c) Turn on the headlamp and make sure that the cutoff line falls within the specified area, as shown in the illustration.

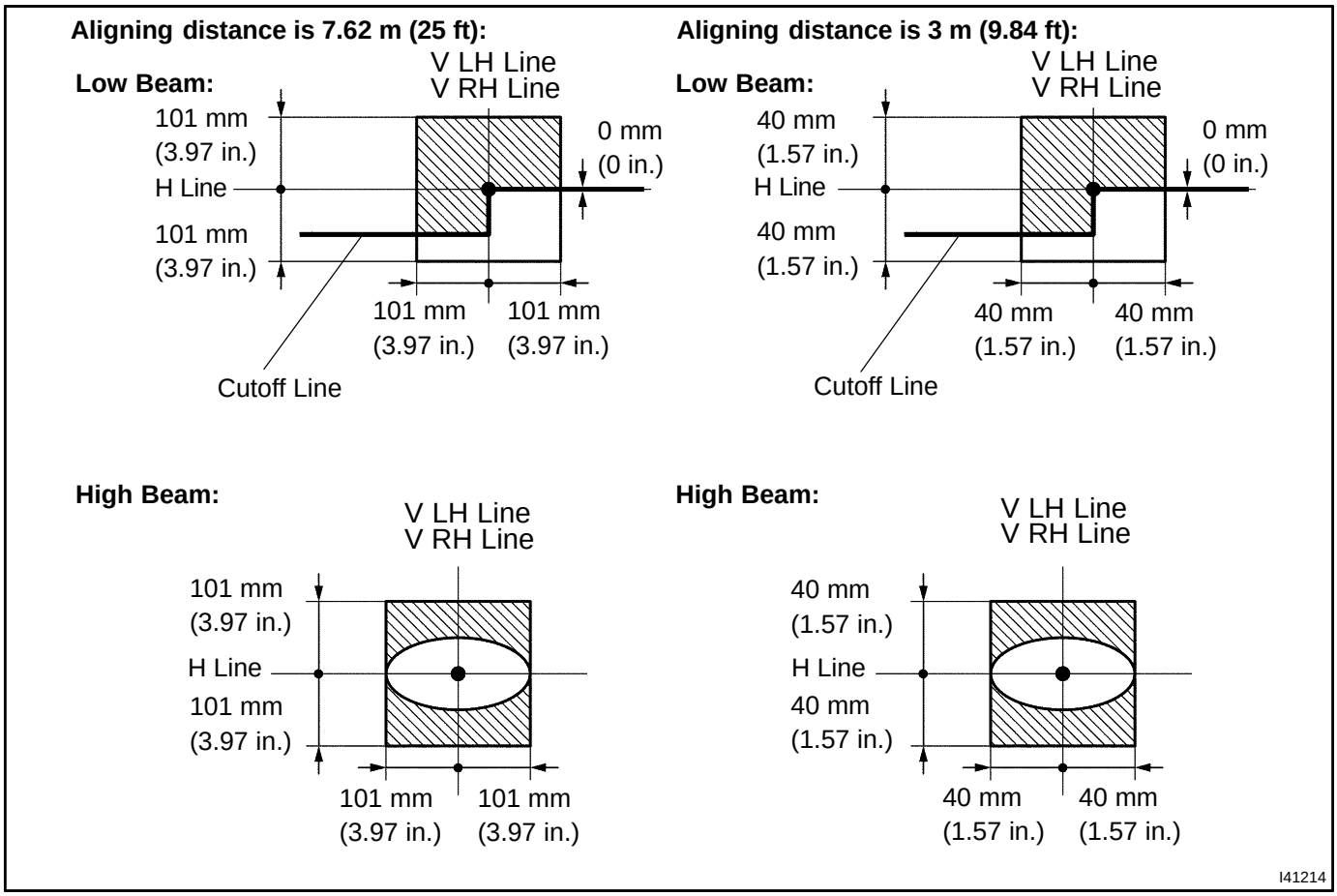

HINT:

- Since the low−beam light and the high−beam light are a unit, if the aim on one is correct, the other should also be correct. However, check both beams just to make sure.
- Alignment distance is 7.62 m (25 ft):
  The cutoff line is 101 mm (3.97 in.) above and below the H line as well as left and right of the V line with low−beam (SAE J599).
- Alignment distance is 3 m (9.84 ft):
  The cutoff line is 40 mm (1.57 in.) above and below the H line as well as left and right of the V line with low−beam (SAE J599).
- Alignment distance is 7.62 m (25 ft):
  The cutoff line is 101 mm (3.97 in.) above and below the H line as well as left and right of the V line with high−beam (SAE J599).
- Alignment distance is 3 m (9.84 ft):
  The cutoff line is 40 mm (1.57 in.) above and below the H line as well as left and right of the V line with high−beam (SAE J599).
- Alignment distance is 7.62 m (25 ft):
  The cutoff line is 53 mm (2.08 in.) below the H line with low−beam.
- Alignment distance is 3 m (9.84 ft):
  The cutoff line is 21 mm (0.82 in.) below the H line with low−beam.

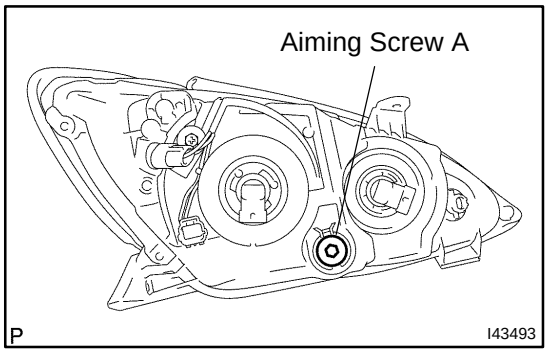

5. HEADLAMP AIMING ADJUSTMENT

(a) Adjust the aim vertically:
Adjust the headlamp aim into the specified range by turning aiming screw A with a screwdriver.

NOTICE:

The final turn of the aiming screw should be made in the clockwise direction. If the screw is tightened excessively, loosen it and then retighten it, so that the final turn of the screw is in the clockwise direction.

HINT:

- Perform low−beam aim adjustment.
- The headlamp aim moves up when turning the aiming screw clockwise, and moves down when turning the aiming screw counterclockwise.

651AO−01

REPAIR

HINT:

- COMPONENTS: SEE PAGE 65−7.
- Use the same procedures for the RH side and LH side.
- The procedures listed below are for the LH side.
- If the area where the headlamp unit LH is installed is broken, the repairs listed below can be performed inexpensively through the use of a repair use bracket. This may only be done if the headlamp assy LH itself is not damaged.

1. REMOVE FRONT BUMPER ASSY (SEE PAGE 76−2)

2. REMOVE HEADLAMP ASSY LH (SEE PAGE 65−8)

3. INSTALL HEADLAMP PROTECTOR RETAINER UPPER LH

HINT:

- If the installation area of the headlamp assy LH is damaged, use the supply bracket for low−cost repair.
- Ensure that the headlamp assy LH is not damaged.

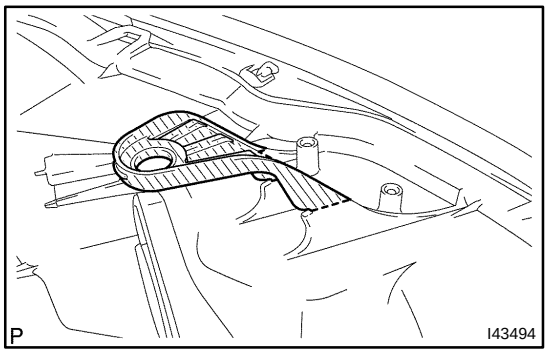

(a) Cut off the part shaded in the illustration and sand smooth with sandpaper.

NOTICE:

After cutting off the part, place the headlamp protector retainer UPPER LH against the bosses and gradually file away until installation is possible.

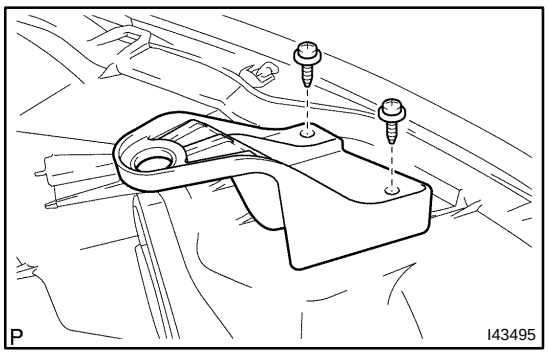

(b) Install the headlamp protector retainer UPPER LH with the 2 screws.

4. VEHICLE PREPARATION FOR HEADLAMP AIM ADJUSTMENT (SEE PAGE 65−10)

5. PREPARATION FOR HEADLAMP AIMING (Using a screen) (SEE PAGE 65−10)

6. HEADLAMP AIMING INSPECTION (SEE PAGE 65−10)

7. HEADLAMP AIMING ADJUSTMENT (SEE PAGE 65−10)

8. VEHICLE PREPARATION FOR FOG LAMP AIM ADJUSTMENT (SEE PAGE 65−17)

9. PREPARATION FOR FOG LAMP AIMING (SEE PAGE 65−17)
10. FOG LAMP AIMING INSPECTION (SEE PAGE 65−17)
11. FOG LAMP AIMING ADJUSTMENT (SEE PAGE 65−17)

FOG LAMP ASSY LH

651AP−01

OVERHAUL

HINT:

- Use the same procedures for the RH side and LH side.
- The procedures listed below are for the LH side.
- Installation is in the reverse order of removal.

1. REMOVE FRONT BUMPER ASSY (SEE PAGE 76−2)

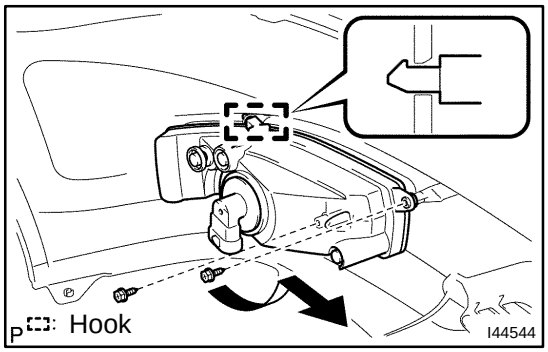

2. REMOVE FOG LAMP ASSY LH

(a) Remove the 2 screws.

(b) Move the fog lamp assy LH in the direction indicated by the arrow, disengage the hook, and remove the fog lamp assy LH.

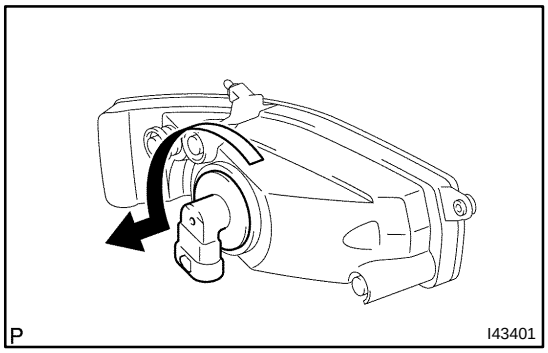

3. REMOVE FOG LAMP BULB

(a) Turn the fog lamp bulb in the direction as shown in the illustration and remove the fog lamp bulb.

4. VEHICLE PREPARATION FOR FOG LAMP AIM ADJUSTMENT (SEE PAGE 65−17)

5. PREPARATION FOR FOG LAMP AIMING (SEE PAGE 65−17)

6. FOG LAMP AIMING INSPECTION (SEE PAGE 65−17)

7. FOG LAMP AIMING ADJUSTMENT (SEE PAGE 65−17)

651AQ−01

ADJUSTMENT

1. VEHICLE PREPARATION FOR FOG LAMP AIM ADJUSTMENT

(a) Prepare the vehicle:

- Ensure there is no damage or deformation to the body around the fog lamps.
- Fill the fuel tank.
- Make sure that the oil is filled to the specified level.
- Make sure that the coolant is filled to the specified level.
- Inflate the tires to the appropriate pressure.
- Place the spare tire, tools, and jack in their original positions.
- Unload the trunk.
- Sit a person of average weight (68 kg, 150 lb) in the driver's seat.

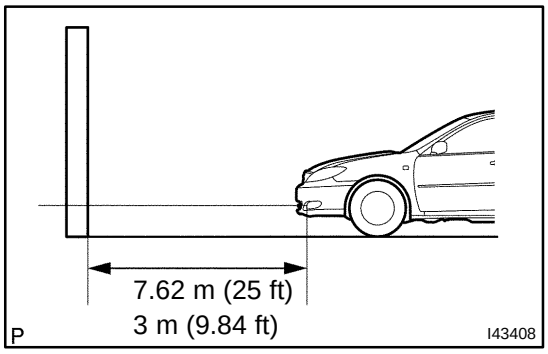

2. PREPARATION FOR FOG LAMP AIMING

(a) Prepare the vehicle according to the following conditions:

- Place the vehicle in a location that is dark enough to clearly observe the cutoff line. The cutoff line is a distinct line, below which light from the fog lamps can be observed and above which it cannot.
- Place the vehicle at a 90 angle to the wall.
- Create a 7.62 m (25 ft) distance between the vehicle (fog lamp bulb center) and the wall.
- Place the vehicle on a level surface.
- Bounce the vehicle up and down to settle the suspension.

NOTICE:

A distance of 7.62 m (25 ft) between the vehicle (fog lamp bulb center) and the wall is necessary for proper aim adjustment. If unavailable, secure a distance of exactly 3 m (9.84 ft) for check and adjustment. (The target zone will change with the distance, so follow the instructions in the illustration.)

(b) Prepare a piece of thick white paper (approximately 2 m (6.6 ft) (height) x 4 m (13.1 ft) (width)) to use as a screen.

(c) Draw a vertical line down the center of screen (V line).

(d) Set the screen as shown in the illustration.

HINT:

- Stand the screen perpendicular to the ground.
- Align the V line on the screen with the center of the vehicle.

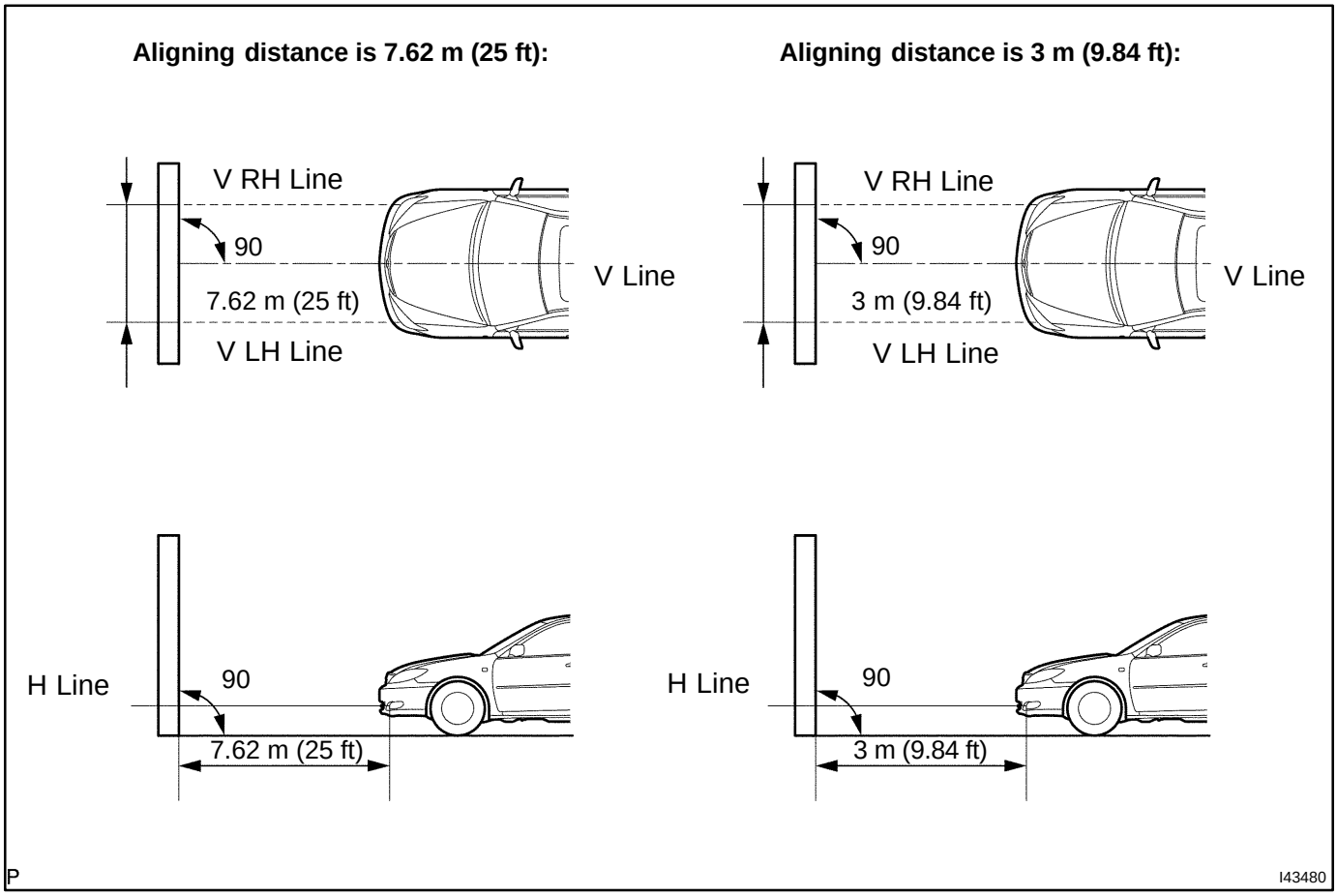

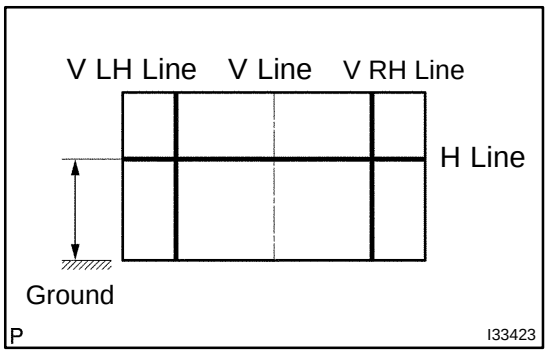

(e) Draw base lines (H line, V LH, V RH lines) on the screen as shown in the illustration.

HINT:

Mark the fog lamp bulb center marks on the screen. If the center mark cannot be observed on the fog lamp, use the center of the fog lamp bulb or the manufacturer's name marked on the fog lamp as the center mark.

(1) H Line (Fog lamp height):
Draw a horizontal line across the screen so that it passes through the center marks. The H line should be at the same height as the fog lamp bulb center marks of the low−beam fog lamps.

(2) V LH Line, V RH Line (Center mark position of left−hand (LH) and right−hand (RH) fog lamps):
Draw two vertical lines so that they intersect the H line at each center mark.

3. FOG LAMP AIMING INSPECTION

(a) Cover or disconnect the connector of the fog lamp on the opposite side to prevent light from the fog lamp not being inspected from affecting fog lamp aiming inspection.

(b) Start the engine.

NOTICE:

Engine rpm must be 1,500 or more.

(c) Turn on the fog lamp and make sure that the cutoff line falls within the specified area, as shown in the illustration.

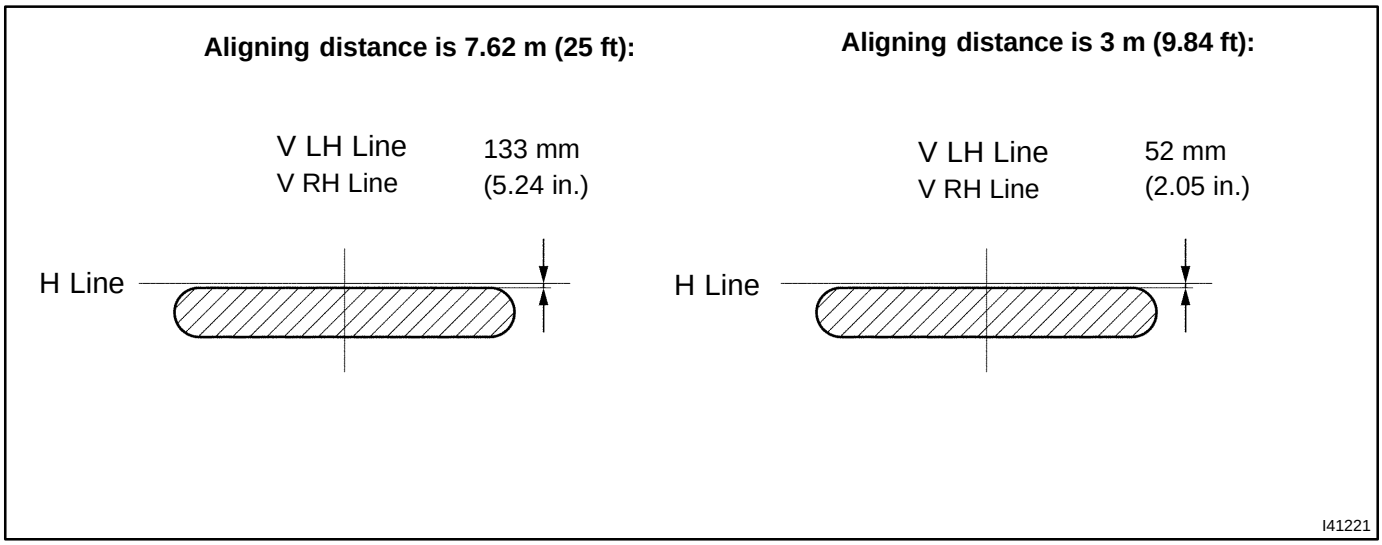

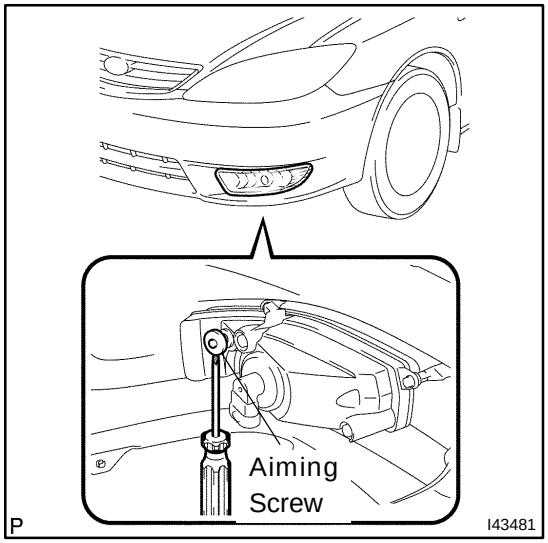

4. FOG LAMP AIMING ADJUSTMENT

(a) Adjust the fog lamp aim into the specified range by turning aiming screw with a screwdriver.

NOTICE:

The final turn of the aiming screw should be made in the clockwise direction. If the screw is tightened excessively, loosen it and then retighten it, so that the final turn of the screw is in the clockwise direction.

REAR COMBINATION LAMP ASSY LH

651AR−01

OVERHAUL

HINT:

- Use the same procedures for the RH side and LH side.
- The procedures listed below are for the LH side.
- Installation is in the reverse order of removal.

1. REMOVE LUGGAGE COMPARTMENT TRIM HOOK NO.1 (SEE PAGE 76−8)

2. REMOVE REAR FLOOR FINISH PLATE (SEE PAGE 76−8)

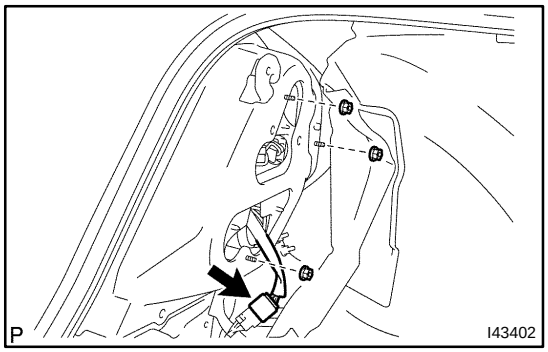

3. REMOVE REAR COMBINATION LAMP ASSY LH

(a) Disconnect the connector.

(b) Remove the 3 nuts and the rear combination lamp assy LH.

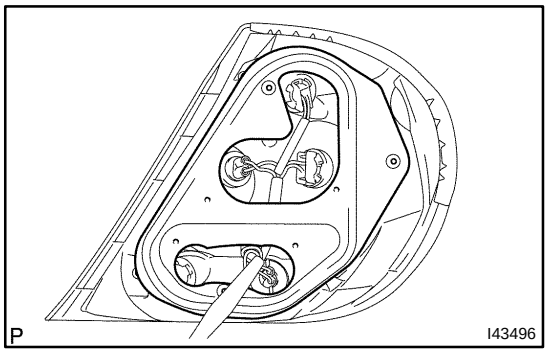

(c) Remove the rear combination lamp gasket RH.

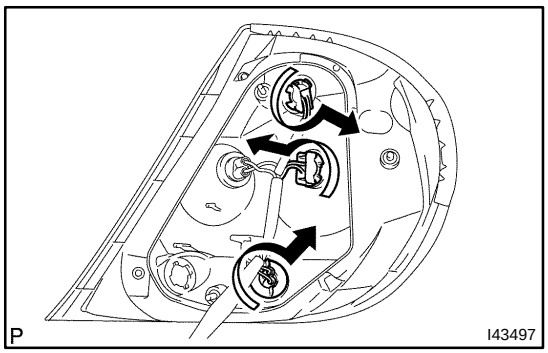

4. REMOVE REAR COMBINATION LAMP BULB

(a) Turn in the direction indicated by the arrow and remove the 3 rear combination lamp socket & wire sub−assy RHs and the 3 rear combination lamp bulbs as a unit.

(b) Remove the 3 rear combination lamp bulbs from the 3 rear combination lamp socket & wire sub−assy RHs.

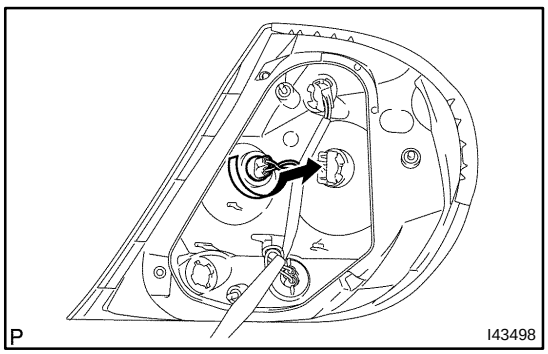

5. REMOVE REAR COMBINATION LAMP BULB

(a) Turn in the direction indicated by the arrow and remove the rear combination lamp socket & wire sub−assy RH and the rear combination lamp bulb as a unit.

(b) Remove the rear combination lamp bulb from the rear combination lamp socket & wire sub−assy RH.

LICENSE PLATE LAMP ASSY

650BR−02

REPLACEMENT

1. **REMOVE LUGGAGE COMPARTMENT DOOR COVER (See Page 76−18)**
2. **REMOVE LUGGAGE COMPARTMENT DOOR GARNISH SUB−ASSY OUTSIDE (See Page 76−18)**

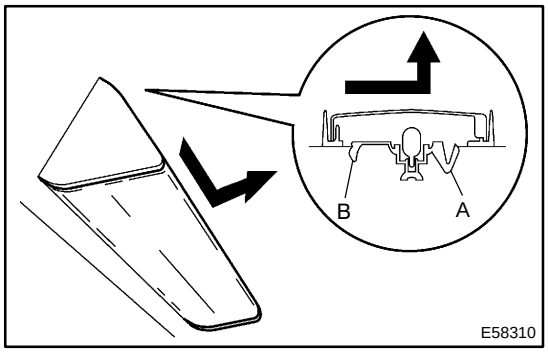

3. **REMOVE LICENSE PLATE LAMP ASSY**

(a) Pull the license plate light assy to the side of vehicle as shown in the illustration and release the claw, then disconnect the connector.

CENTER STOP LAMP ASSY

REPLACEMENT

650BS−02

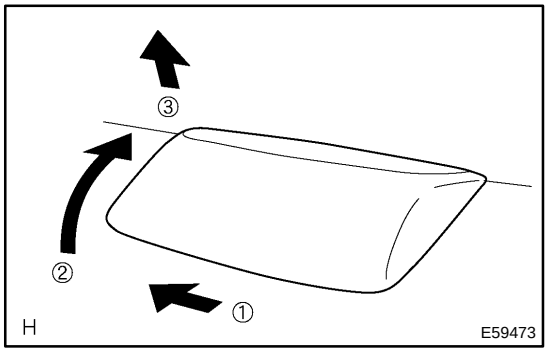

1. REMOVE CENTER STOP LAMP ASSY (W/O REAR SPOILER LED)

(a) Pull out the center stop light assy shown in the illustration.

(b) Disconnect connector.

2. REMOVE LUGGAGE COMPARTMENT DOOR COVER (W/ REAR SPOILER LED) (See Page 76−9)

3. REMOVE REAR SPOILER SUB−ASSY (W/ REAR SPOILER LED) (See Page 76−9)

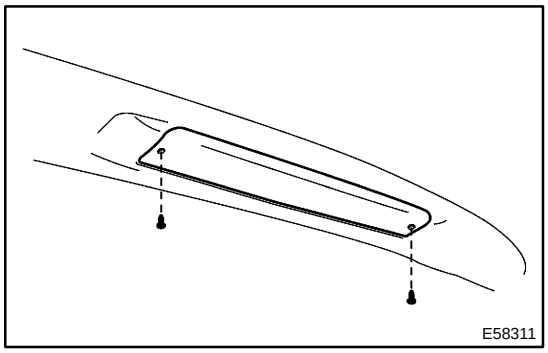

4. REMOVE CENTER STOP LAMP ASSY (W/ REAR SPOILER LED)

(a) Remove the 2 screws and center stop light assy.

5. INSTALL REAR SPOILER SUB−ASSY (W/ REAR SPOILER LED) (See Page 76−9)

HEADLAMP DIMMER SWITCH ASSY

650BT−02

REPLACEMENT

1. REMOVE STEERING COLUMN COVER
(See Page 50−9)

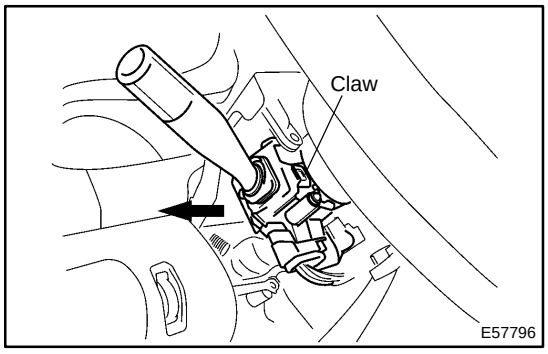

2. REMOVE HEADLAMP DIMMER SWITCH ASSY

(a) Disconnect the connector.

(b) Using a screwdriver, release the claw and pull out the headlight dimmer switch assy.

NOTICE:

Pressing the claw hard breaks the claw.

HINT:

Tape the screwdriver tip before use.

WIPER AND WASHER SYSTEM

6604P−01

PRECAUTION

1. PRECAUTION OF WASHER NOZZLE ADJUSTMENT

(a) Do not clean or adjust the washer nozzle with a safety pin etc. because;
  (1) the washer nozzle tip is made of resin and could be damaged.
  (2) adjustment is not necessary because the washer nozzle is spray type.

(b) In case the washer nozzle is clogged with wax etc., remove the objects and clean the nozzle hole with a soft resin brush etc.

6604Q−01

PROBLEM SYMPTOMS TABLE

1. WIPER AND WASHER SYSTEM

Symptom	Suspect Area	See page
Front wipers do not operate.	1. IG1 Relay 2. WIPER Fuse 3. Front Wiper Switch 4. Wire Harness	− − 66−4 −
Front wipers do not operate in LO or HI.	1. Front Wiper Switch 2. Front Wiper Motor 3. Wire Harness	66−4 66−4 −
Front wipers do not operate in INT.	1. Front Wiper Switch 2. Front Wiper Motor 3. Wire Harness	66−4 66−4 −
Front Washer motor does not operate.	1. WIPER Fuse 2. Front Washer Switch 3. Front Washer Motor 4. Wire Harness	− 66−4 65−2 −
Front Wipers do not operate when washer switch in ON.	1. Front Wiper Switch 2. Front Wiper Motor 3. Wire Harness	66−4 66−4 −
Washer fluid does not operate.	1. Washer Hose and Nozzle	−
●When the wiper switch is OFF, the wiper blade does not retract or the retract position is wrong. ●The wiper blade is in contact with the body.	1. Wiper Motor (wiper arm and blade set position)	66−6

6604R−01

ON−VEHICLE INSPECTION

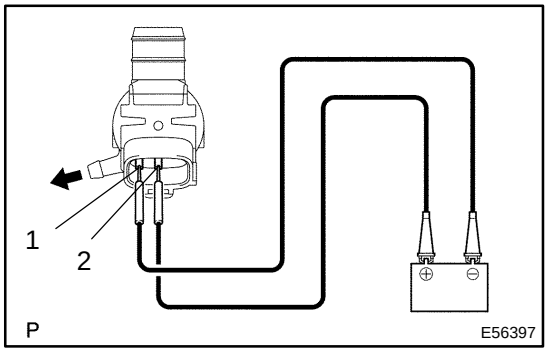

1. WASHER MOTOR

(a) Operation Check

(1) Pour the water into the washer jar with the washer motor and the pump installed to the washer jar assy.

(2) Connect the battery (+) to terminal 2 of the washer motor and the pump, the battery (−) to terminal 1 of the washer motor and the pump. Check that the water comes out from the washer jar.

6604S−01

INSPECTION

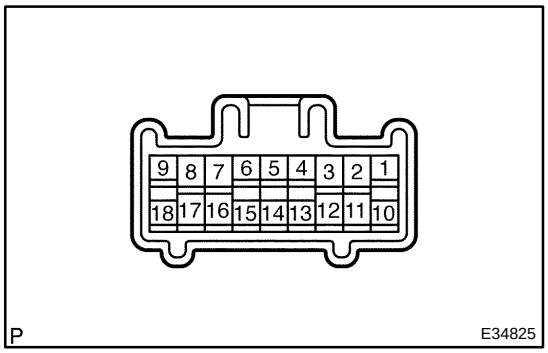

1. WINDSHIELD WIPER SWITCH ASSY

(a) Continuity Check

(1) Check the continuity of each terminal of the connector.

Standard:

Front Wiper Switch

Switch position	Tester connection	Specified condition
MIST	7 (+1) − 17 (+B)	Continuity
OFF	16 (+S) − 7 (+1)	Continuity
INT	16 (+S) − 7 (+1)	Continuity
LO	7 (+1) − 17 (+B)	Continuity
HI	17 (+B) − 8 (+2)	Continuity

Front Washer Switch

Switch position	Tester connection	Specified condition
OFF	−	No continuity
ON	11 (WF) − 2 (EW)	Continuity

(b) Intermittent Operation Check

(1) Connect the voltmeter (+) terminal to terminal 7 (+1) of the connector, the voltmeter (−) terminal to terminal 2 (EW) of the connector.

(2) Connect the battery (+) to terminal 17 (+B) of the connector, the battery (−) to terminal 2 (EW) and 16 (+S) of the connector.

(3) Turn the wiper switch to INT.

(4) Connect the battery (+) to terminal 16 (+S) of the connector for 5 seconds.

(5) Connect the battery (−) to terminal 16 (+S) of the connector. Operate the intermittent wiper relay and check voltage between terminal 7 (+1) and terminal 2 (EW).

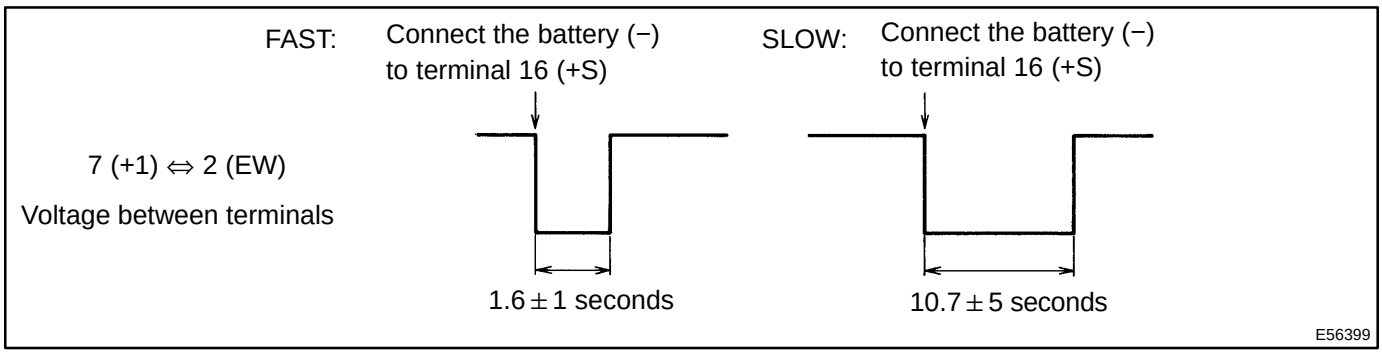

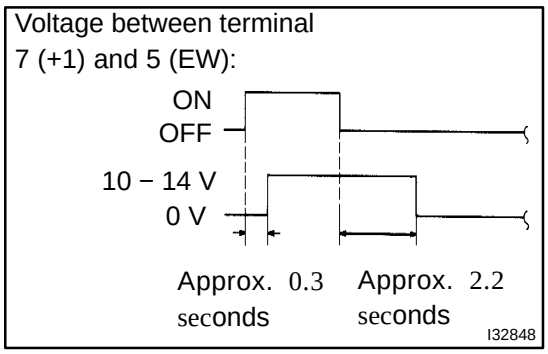

(c) Operation Check (Front Wiper)
(1) Turn the wiper switch to OFF.
(2) Connect the battery (+) to terminal 17 (+B) of the connector, the battery (−) to terminal 16 (+S) and 2 (EW) of the connecter.
(3) Connect the voltmeter (+) terminal to terminal 7 (+1) of the connector, and the voltmeter (−) terminal to terminal 2 (EW) of the connector. Turn the washer switch to ON and OFF, and check voltage between terminal 7 (+1) and terminal 2 (EW).

2. WINDSHIELD WIPER MOTOR ASSY

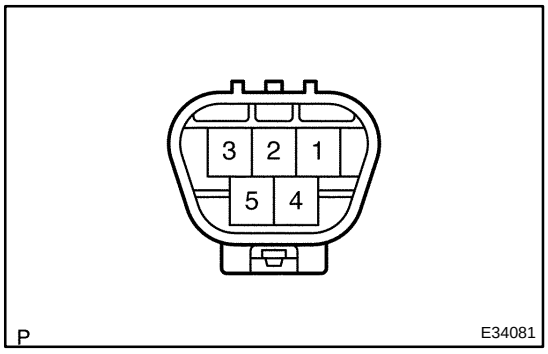

(a) LO Operation Check
(1) Connect the battery (+) to terminal 1 (+1) of the connector, the battery (−) to terminal 5 (E) of the connector, and check that the motor operates at low speed (LO).
(b) HI Operation Check
(1) Connect the battery (+) to terminal 4 (+2) of the connector, the battery (−) to terminal 5 (E) of the connector, and check that the motor operates at high speed (HI).
(c) Automatic Stop Operation Check
(1) Connect the battery (+) to terminal 1 (+1) of the connector, the battery (−) to terminal 5 (E) of the connector. With the motor being rotated at low speed (LO), disconnect terminal 1 (+1) to stop the wiper motor operation at any position except the automatic stop position.
(2) Connect terminals 1 (+1) and 3 (S), and the battery (+) to terminal 2 (B) to restart the motor operation at low speed.
SST 09843−18040

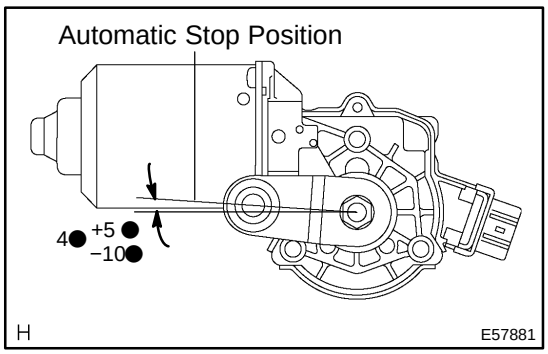

(3) Check the automatic stop position.

WINDSHIELD WIPER MOTOR ASSY

6604T−01

REPLACEMENT

1. REMOVE FRONT WIPER ARM HEAD CAP

2. REMOVE FR WIPER ARM LH

(a) Operate the wiper and stop the windshield wiper motor assy at the automatic stop position.

3. REMOVE FR WIPER ARM RH

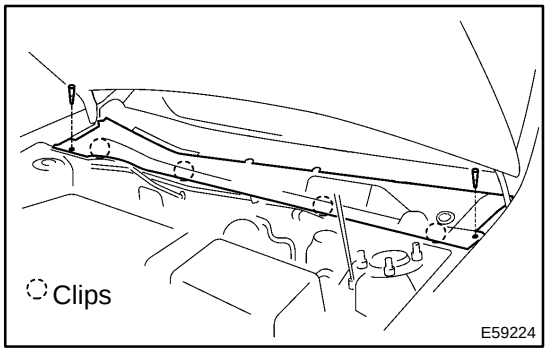

4. REMOVE COWL TOP VENTILATOR LOUVER SUB−ASSY

(a) Remove the 6 clips and cowl top ventilator louver sub assy.

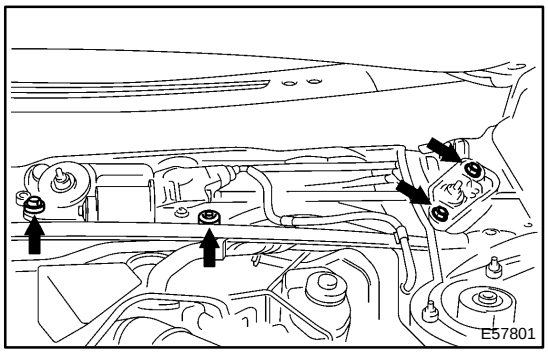

5. REMOVE WIPER LINK ASSY

(a) Disconnect the connector.
(b) Remove the 4 bolts and wiper link assy.

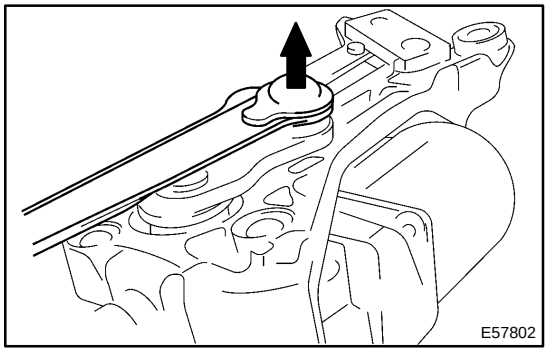

6. REMOVE WINDSHIELD WIPER MOTOR ASSY

(a) Disengage the meshing of rod at the clank arm pivot of the windshield wiper motor assy.

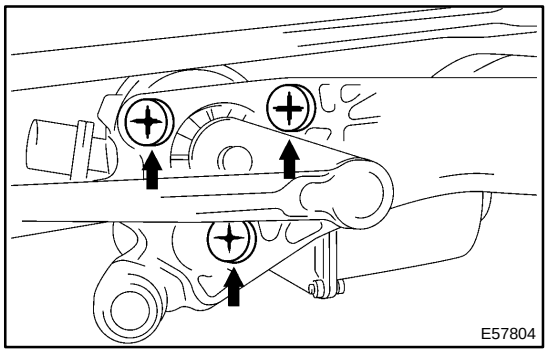

(b) Remove the 3 bolts and windshield wiper motor assy from the windshield wiper link assy.

HINT:
Turning the crank arm by hand prior to the operation will be able to remove the wiper motor easier.

7. INSTALL WINDSHIELD WIPER MOTOR ASSY

(a) Apply grease to the clank arm pivot of the windshield wiper motor assy.
(b) Install the windshield wiper motor assy with the 3 bolts to the windshield wiper link assy.
Torque: 5.4 N·m (55 kgf·cm, 48 in.·lbf)

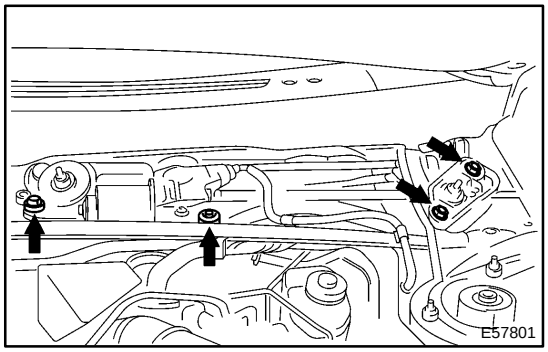

8. INSTALL WIPER LINK ASSY

(a) Install the windshield wiper link assy with the 4 bolts.
Torque: 7.0 N·m (71 kgf·cm, 62 in.·lbf)
(b) Connect the connector.

9. INSTALL FR WIPER ARM RH

(a) Operate the wiper, and stop the windshield wiper motor assy at the automatic stop position.

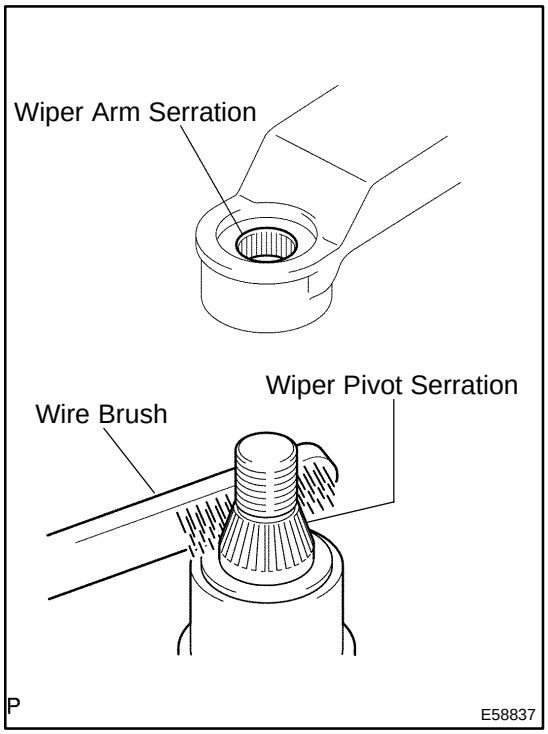

(b) Scrape off the serration part of the wiper arm with a round file or equivalent.
(c) Clean the wiper pivot serration with the wire brush.

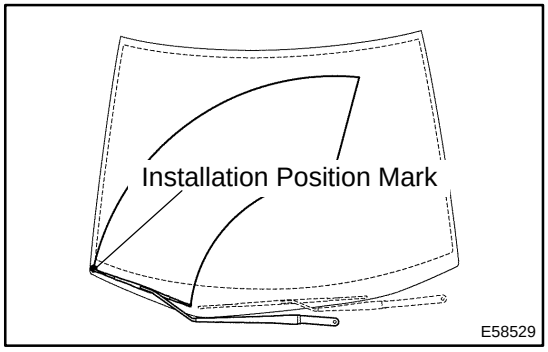

(d) Align the FR wiper blade front end with the mark and install the FR wiper arm RH with the nut.
Torque: 20.1 N·m (205 kgf·cm, 15 ft·lbf)

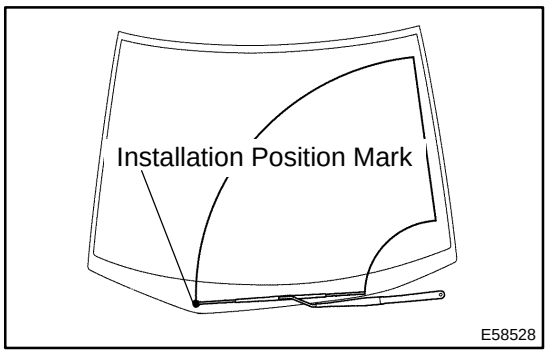

10. INSTALL FR WIPER ARM LH

(a) Clean the wiper pivot serration with the wire brush.
(b) Align the FR wiper blade front tip with the mark and install the FR wiper arm LH with the nut.
Torque: 20.1 N·m (205 kgf·cm, 15 ft·lbf)
(c) Operate the wiper while running the water or the washer fluid over the window, and check the wiping condition and that the wiper does not hit against the vehicle body.

WIPER RUBBER LH

6604U−01

REPLACEMENT

1. REMOVE FR WIPER BLADE LH

(a) Remove the FR wiper blade LH from the front wiper arm LH.

NOTICE:

Do not fold down the front wiper arm with the front wiper blade being removed from it.

2. REMOVE WIPER RUBBER LH

(a) Remove the FR wiper rubber LH from the FR wiper blade LH.

(b) Remove the 2 wiper rubber backing plates from the wiper rubber LH.

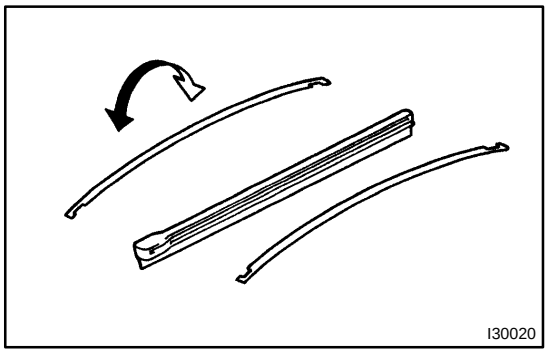

3. INSTALL WIPER RUBBER LH

(a) Install the 2 wiper rubber backing plates to the wiper rubber LH.

NOTICE:

Be careful to observe and keep direction of curvature for correct replacement.

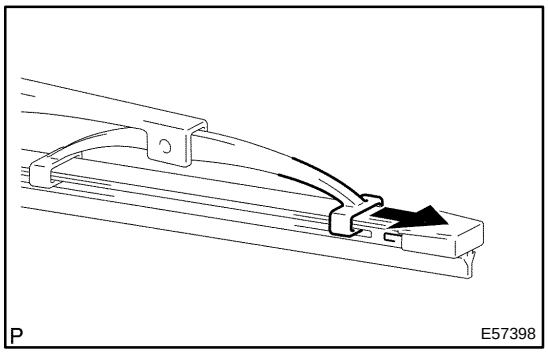

(b) Install the wiper rubber LH so that the head part (Longer side) of the wiper rubber faces the arm axle side.

NOTICE:

- **Push in the front wiper blade into the grooves of the wiper rubber to engage them completely.**
- **Put back the wiper arm of passenger side before driver side wiper arm is put back.**

WINDSHIELD WIPER SWITCH ASSY

6604V−01

REPLACEMENT

1. REMOVE STEERING COLUMN COVER
(See Page 50−9)

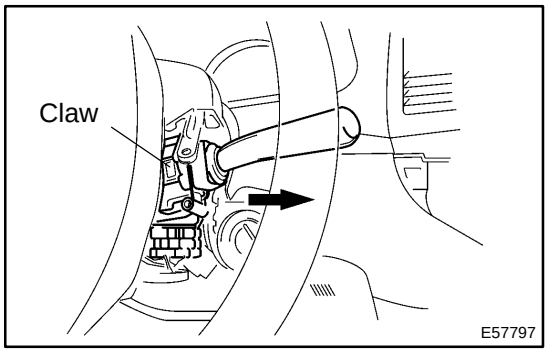

2. REMOVE WINDSHIELD WIPER SWITCH ASSY

(a) Disconnect the connector.
(b) Using a screwdriver, release the claw and pull out the windshield wiper switch assy.

NOTICE:
Pressing the claw hard breaks the claw.
HINT:
Tape the screwdriver tip before use.

AUDIO & VISUAL SYSTEM

671DS−01

LOCATION

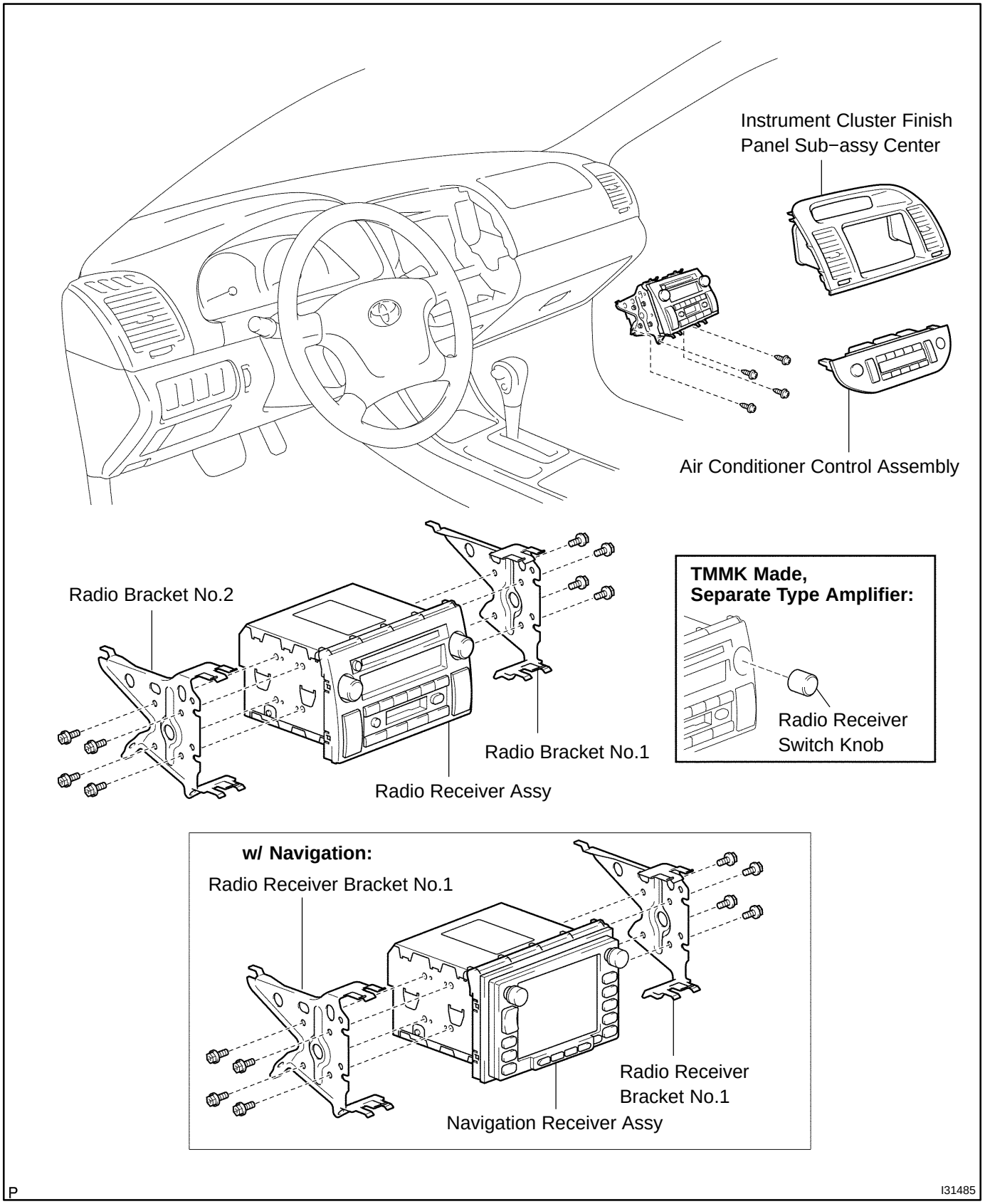

P

I31485

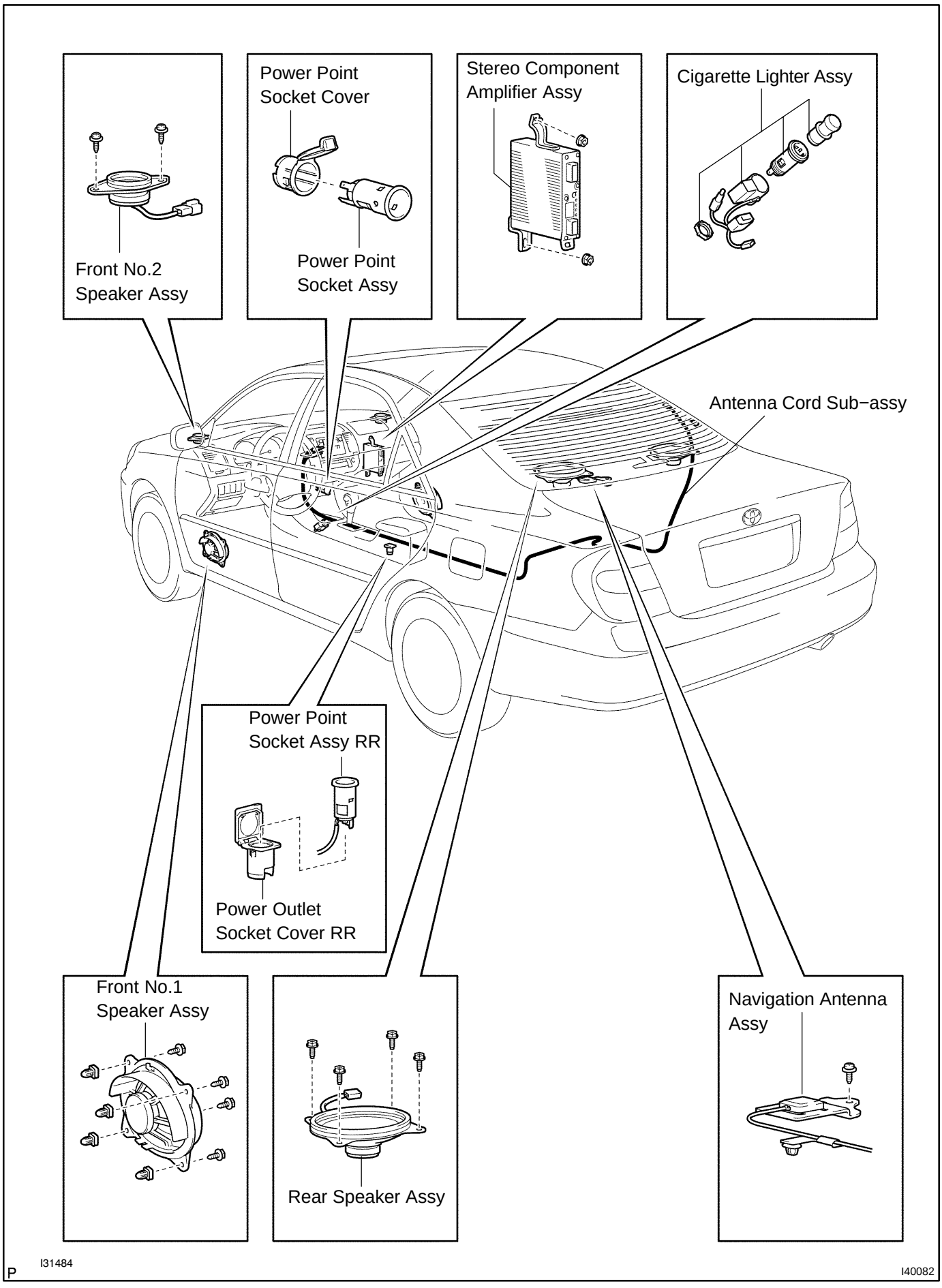
Front No.2
Speaker Assy
Power Point
Socket Cover
Power Point
Socket Assy
Stereo Component
Amplifier Assy
Cigarette Lighter Assy
Antenna Cord Sub−assy
Power Point
Socket Assy RR
Power Outlet
Socket Cover RR
Front No.1
Speaker Assy
Rear Speaker Assy
Navigation Antenna
Assy
P
I31484
I40082

w/ 3 SPOKE STEERING WHEEL ASSY:

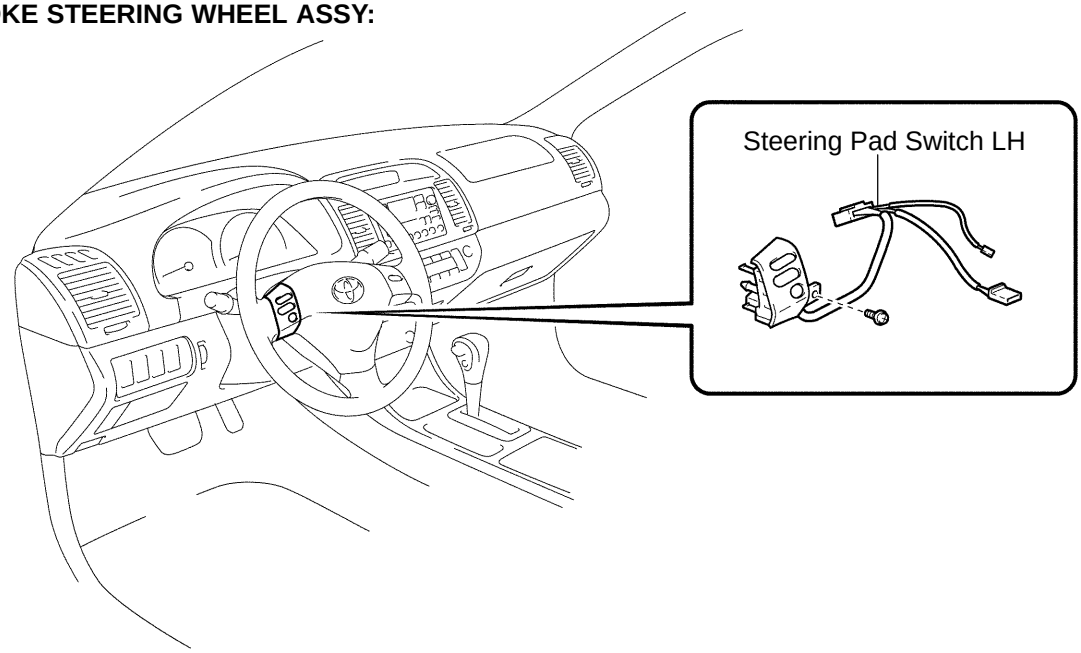

w/ 4 SPOKE STEERING WHEEL ASSY:

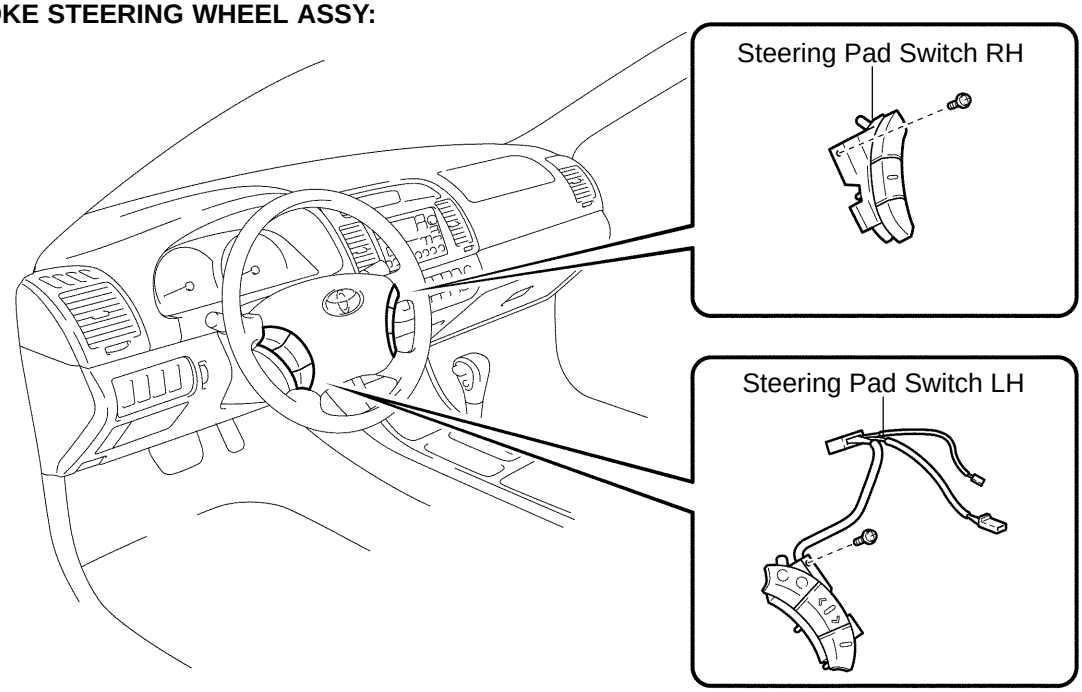

P

I43762

RADIO RECEIVER ASSY

REPLACEMENT

6708W−03

HINT:

COMPONENTS: See page 67−1

1. REMOVE AIR CONDITIONER CONTROL ASSEMBLY (See page 71−16)

2. REMOVE INSTRUMENT CLUSTER FINISH PANEL SUB−ASSY CENTER (See page 71−16)

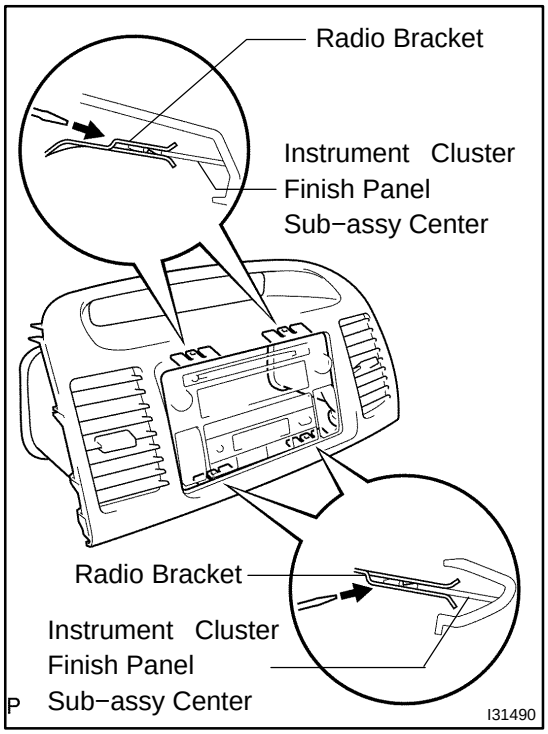

3. REMOVE RADIO RECEIVER ASSY

(a) Insert a screwdriver at indicated point and remove the radio receiver assy from instrument cluster finish panel sub−assy center.

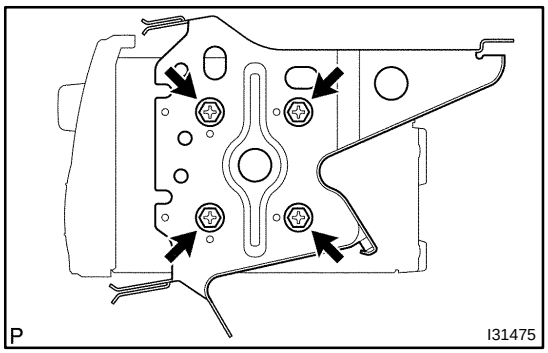

4. REMOVE RADIO BRACKET NO.1

(a) Remove the 4 screws and radio bracket No.1.

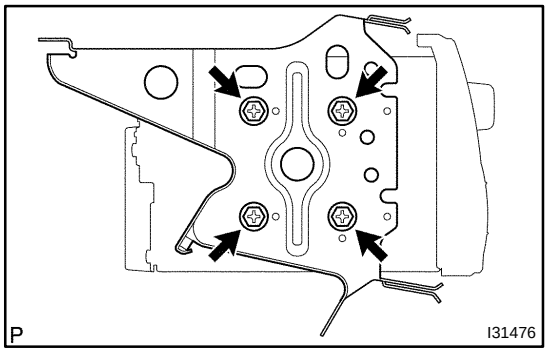

5. REMOVE RADIO BRACKET NO.2

(a) Remove the 4 screws and radio bracket No.2.

NAVIGATION RECEIVER ASSY

6708X−03

REPLACEMENT

HINT:

COMPONENTS: See page 67−1

1. REMOVE AIR CONDITIONER CONTROL ASSEMBLY (See page 71−16)

2. REMOVE INSTRUMENT CLUSTER FINISH PANEL SUB−ASSY CENTER (See page 71−16)

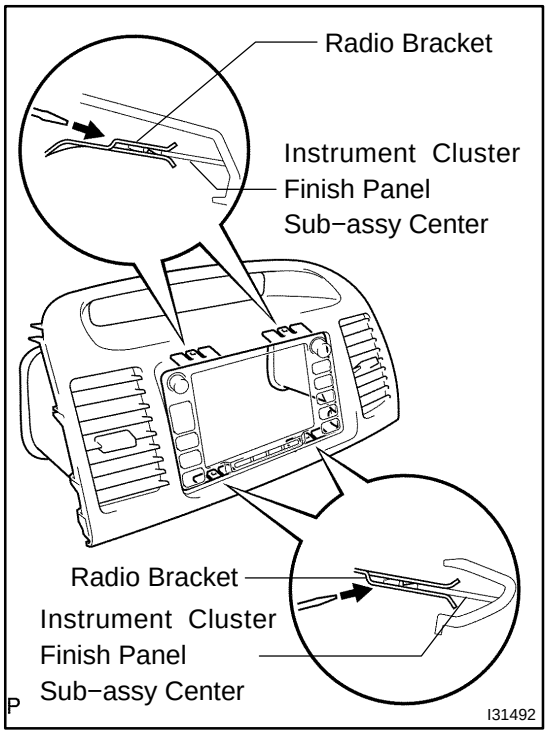

3. REMOVE NAVIGATION RECEIVER ASSY

(a) Insert a screwdriver at indicated point and remove the navigation receiver assy from instrument cluster finish panel sub−assy.

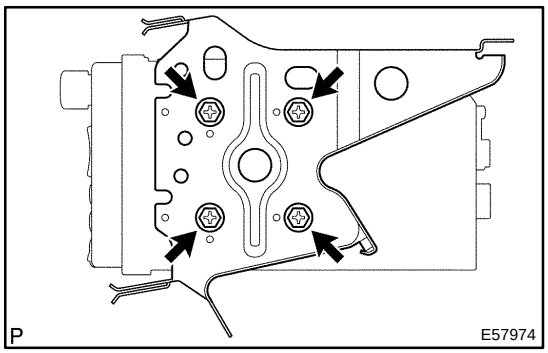

4. REMOVE RADIO BRACKET NO.1

(a) Remove the 4 screws and radio receiver bracket No.1.

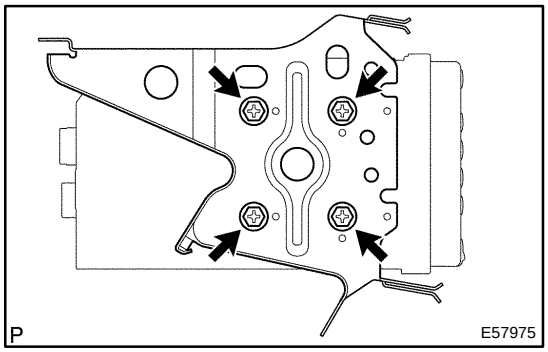

5. REMOVE RADIO BRACKET NO.2

(a) Remove the 4 screws and radio receiver bracket No.2.

NAVIGATION ECU

67090−02

REPLACEMENT

HINT:

COMPONENTS: See page 67−1 or 76−7

1. **REMOVE LUGGAGE COMPARTMENT FLOOR MAT**
2. **REMOVE SPARE WHEEL COVER ASSY**
3. **REMOVE LUGGAGE COMPARTMENT SIDE COVER SUB−ASSY RH**
4. **REMOVE LUGGAGE COMPARTMENT TRIM HOOK NO.1 (See page 76−8)**
5. **REMOVE REAR FLOOR FINISH PLATE (See page 76−8)**
6. **REMOVE LUGGAGE COMPARTMENT TRIM COVER INNER LH (See page 76−8)**

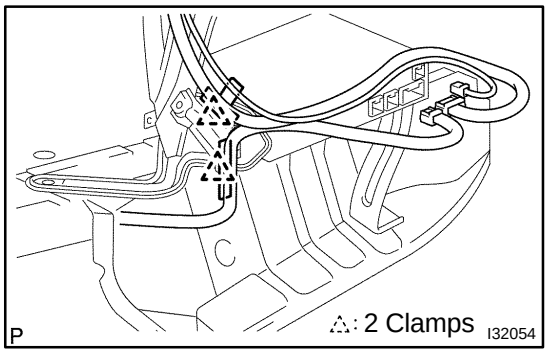

7. REMOVE NAVIGATION ECU

(a) Disconnect the connectors and remove the 2 clamps.

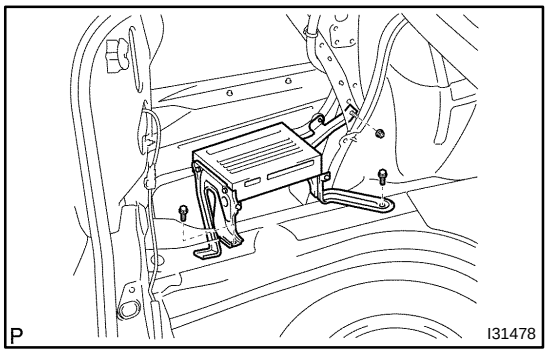

(b) Remove the nut and 2 bolts, then remove the navigation ECU.

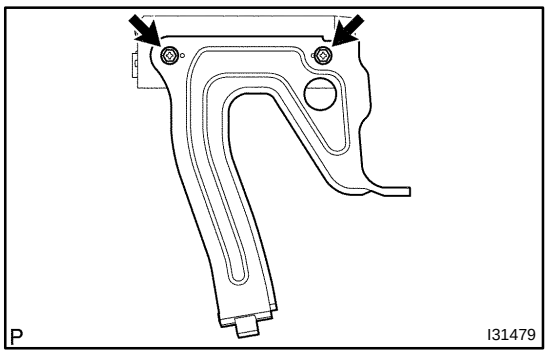

8. REMOVE DISC PLAYER BRACKET

(a) Remove the 2 screws and disc player bracket.

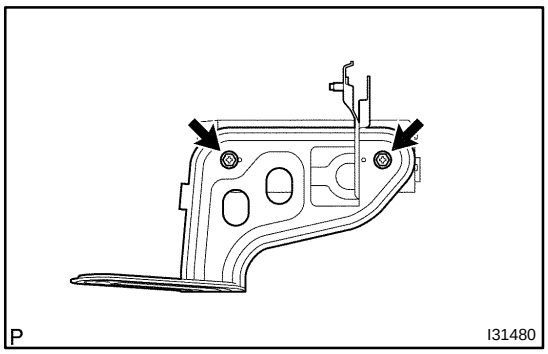

9. REMOVE DISC PLAYER BRACKET NO.2

(a) Remove the 2 screws and disc player bracket No.2.

FRONT NO.1 SPEAKER ASSY

67093−03

REPLACEMENT

HINT:

COMPONENTS: See page 67−1

1. **REMOVE POWER WINDOW REGULATOR MASTER SWITCH ASSY (See page 75−8)**
2. **REMOVE FRONT DOOR LOWER FRAME BRACKET GARNISH LH (See page 75−8)**
3. **REMOVE FRONT DOOR INSIDE HANDLE BEZEL PLUG LH (See page 75−8)**
4. **REMOVE FRONT DOOR TRIM BOARD SUB−ASSY LH (See page 75−8)**

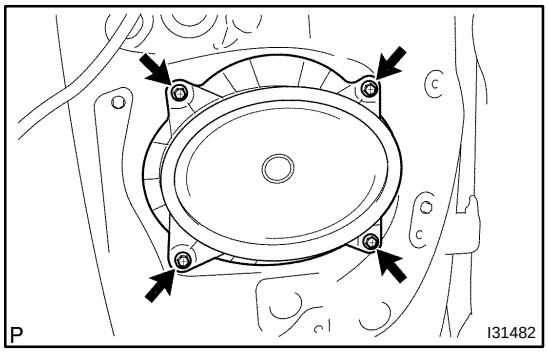

5. REMOVE FRONT NO.1 SPEAKER ASSY

(a) Disconnect the connector.

(b) Remove the 4 screws and front No.1 speaker assy.

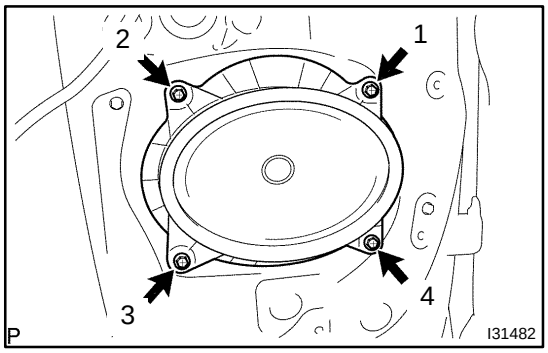

6. INSTALL FRONT NO.1 SPEAKER ASSY

(a) Install the front No.1 speaker assy with the 4 screws.

NOTICE:

Install them in the order shown in the illustration.

(b) Connect the connector.

FRONT NO.2 SPEAKER ASSY

6708Y−04

REPLACEMENT

HINT:

COMPONENTS: See page 67−1

1. REMOVE INSTRUMENT PANEL SPEAKER PANEL SUB−ASSY NO.2 (See page 71−16)

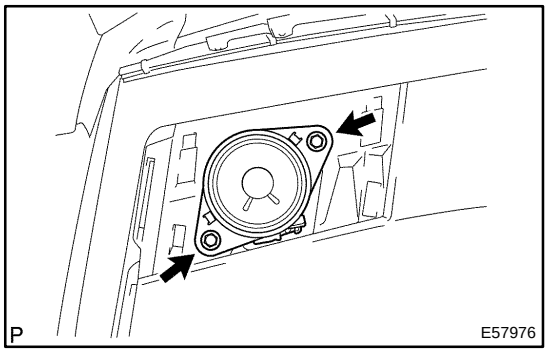

2. REMOVE FRONT NO.2 SPEAKER ASSY

(a) Remove the 2 bolts.

(b) Disconnect the connector and remove the front No.2 speaker assy.

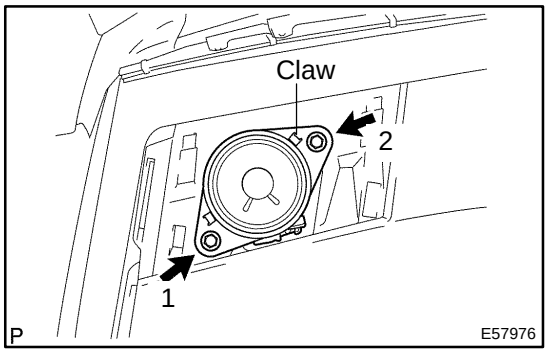

3. INSTALL FRONT NO.2 SPEAKER ASSY

(a) Connect the connector.

(b) Align a claw with the notch of the instrument panel safety pad with 2 bolts, and install the front No.2 speaker assy.

NOTICE:

Install them in the order shown in the illustration.

REAR SPEAKER ASSY

671CC−02

REPLACEMENT

HINT:

COMPONENTS: See page 67−1

1. **REMOVE REAR SEAT CUSHION ASSY (See page 72−32)**
2. **REMOVE REAR SEAT BACK ASSY RH (See page 72−32)**
3. **REMOVE REAR SEAT BACK ASSY LH (See page 72−32)**
4. **REMOVE REAR SIDE SEAT BACK ASSY RH (See page 72−32)**
5. **REMOVE REAR SIDE SEAT BACK ASSY LH(See page 72−32)**
6. **REMOVE ROOF SIDE GARNISH INNER RH (W/O CURTAIN SHIELD AIR BAG) (See page 76−22)**
7. **REMOVE ROOF SIDE GARNISH INNER LH (W/O CURTAIN SHIELD AIR BAG) (See page 76−22)**
8. **REMOVE ROOF SIDE GARNISH INNER RH (W/ CURTAIN SHIELD AIR BAG) (See page 76−22)**
9. **REMOVE ROOF SIDE GARNISH INNER LH (W/ CURTAIN SHIELD AIR BAG) (See page 76−22)**
10. **REMOVE CENTER STOP LAMP ASSY (See page 65−22)**
11. **REMOVE REAR SEAT SHOULDER BELT COVER RH (See page 61−13 or 61−16)**
12. **REMOVE ROOM PARTITION BOARD ASSY (TMMK MADE) (See page 61−16)**
13. **REMOVE PACKAGE TRAY TRIM PANEL ASSY (TMC MADE) (See page 61−13)**
14. **REMOVE PACKAGE TRAY TRIM PANEL ASSY (TMMK MADE) (See page 61−16)**

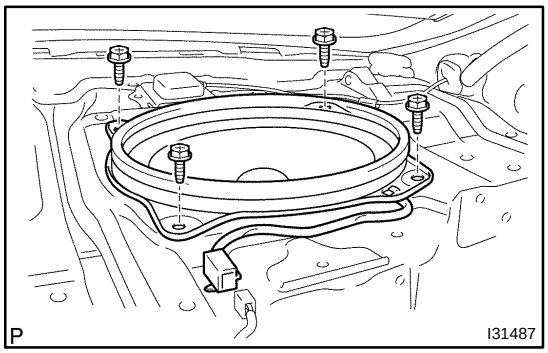

15. REMOVE SPEAKER ASSY, RADIO

(a) Disconnect the connector.

(b) Remove the 4 screws and rear speaker assy.

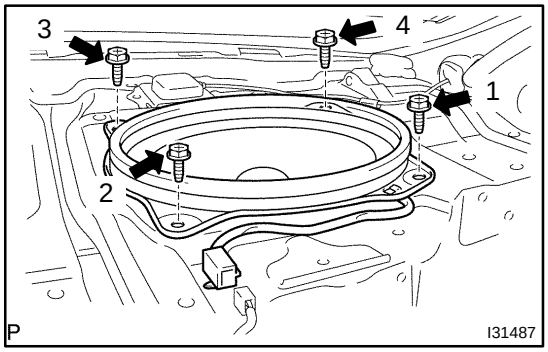

16. INSTALL SPEAKER ASSY, RADIO

(a) Install the rear speaker assy with the 4 screws.

NOTICE:

Install them in the order shown in the illustration.

(b) Connect the connector.

17. **INSTALL REAR SIDE SEAT BACK ASSY LH (See page 72−32)**
18. **INSTALL REAR SIDE SEAT BACK ASSY RH (See page 72−32)**
19. **INSTALL REAR SEAT BACK ASSY RH (See page 72−32)**
20. **INSTALL REAR SEAT BACK ASSY LH (See page 72−32)**

ANTENNA CORD SUB−ASSY

67097−03

REPLACEMENT

HINT:

COMPONENTS: See page 67−1

1. **REMOVE FRONT DOOR SCUFF PLATE LH (See page 71−16)**
2. **REMOVE FRONT DOOR SCUFF PLATE RH (See page 71−16)**
3. **REMOVE COWL SIDE TRIM SUB−ASSY LH (See page 71−16)**
4. **REMOVE COWL SIDE TRIM SUB−ASSY RH (See page 71−16)**
5. **REMOVE INSTRUMENT PANEL COIN BOX SUB−ASSY (See page 71−16)**
6. **REMOVE INSTRUMENT PANEL SUB−ASSY UPPER (See page 71−16)**
7. **REMOVE INSTRUMENT PNL INSERT SUB−ASSY LWR LH (TMMK MADE) (See page 71−16)**
8. **REMOVE AIR CONDITIONER CONTROL ASSEMBLY (See page 71−16)**
9. **REMOVE INSTRUMENT CLUSTER FINISH PANEL SUB−ASSY CENTER (See page 71−16)**
10. **REMOVE INSTRUMENT PANEL UNDER COVER SUB−ASSY NO.1 (See page 71−16)**
11. **REMOVE GLOVE COMPARTMENT DOOR PAD (See page 71−16)**
12. **REMOVE INSTRUMENT PANEL SUB−ASSY LOWER (See page 71−16)**
13. **REMOVE SHIFT LEVER KNOB SUB−ASSY (M/T TRANSAXLE) (See page 71−16)**
14. **REMOVE CONSOLE PANEL UPPER REAR (See page 71−16)**
15. **REMOVE CONSOLE BOX CARPET (See page 71−16)**
16. **REMOVE RR CONSOLE BOX (See page 71−16)**
17. **REMOVE INSTRUMENT PANEL CUP HOLDER (W/O ASHTRAY) (See page 71−16)**
18. **REMOVE FRONT ASH RECEPTACLE ASSY (W/ ASHTRAY) (See page 71−16)**
19. **REMOVE CONSOLE PANEL SUB−ASSY UPPER (See page 71−16)**
20. **REMOVE CONSOLE BOX FRONT (See page 71−16)**
21. **REMOVE INSTRUMENT PANEL FINISH PANEL LOWER CENTER (See page 71−16)**
22. **REMOVE FRONT SEAT TRACK COVER LH REAR OUTER (TMC MADE) (See page 72−15)**
23. **REMOVE FRONT SEAT TRACK COVER LH REAR INNER (TMC MADE)(See page 72−15)**
24. **REMOVE FRONT SEAT TRACK COVER RH REAR OUTER (TMC MADE)(See page 72−15)**
25. **REMOVE FRONT SEAT TRACK COVER RH REAR INNER (TMC MADE)(See page 72−15)**
26. **REMOVE FRONT SEAT ASSY RH (POWER SEAT) (See page 72−23)**
27. **REMOVE FRONT SEAT ASSY RH (MANUAL SEAT) (See page 72−15)**
28. **REMOVE FRONT SEAT ASSY LH (POWER SEAT) (See page 72−23)**
29. **REMOVE FRONT SEAT ASSY LH (MANUAL SEAT) (See page 72−15)**
30. **REMOVE REAR SEAT CUSHION ASSY (See page 72−32)**
31. **REMOVE REAR SEAT BACK ASSY RH (See page 72−32)**
32. **REMOVE REAR SEAT BACK ASSY LH (See page 72−32)**
33. **REMOVE REAR SIDE SEAT BACK ASSY RH (TMC MADE) (See page 72−32)**
34. **REMOVE REAR SIDE SEAT BACK ASSY LH (TMC MADE) (See page 72−32)**
35. **REMOVE ROOF SIDE GARNISH INNER RH (W/O CURTAIN SHIELD AIR BAG) (See page 76−22)**
36. **REMOVE ROOF SIDE GARNISH INNER LH (W/O CURTAIN SHIELD AIR BAG) (See page 76−22)**
37. **REMOVE ROOF SIDE GARNISH INNER RH (W/ CURTAIN SHIELD AIR BAG) (See page 76−22)**
38. **REMOVE ROOF SIDE GARNISH INNER LH (W/ CURTAIN SHIELD AIR BAG) (See page 76−22)**
39. **REMOVE REAR SEAT SHOULDER BELT COVER RH (See page 61−13)**
40. **REMOVE PACKAGE TRAY TRIM PANEL ASSY (TMC MADE) (See page 67−10)**

41. **REMOVE REAR SEAT 3 POINT TYPE BELT ASSY OUTER (TMC MADE) (See page 61−13)**
42. **REMOVE REAR SEAT INNER W/CENTER BELT ASSY RH (TMC MADE) (See page 61−13)**
43. **REMOVE REAR SEAT INNER W/CENTER BELT ASSY LH (TMC MADE) (See page 61−13)**
44. **REMOVE ROOM PARTITION BOARD LH (TMC MADE) (See page 67−10)**
45. **REMOVE ROOM PARTITION BOARD RH (TMC MADE) (See page 67−10)**
46. **REMOVE AIR DUCT REAR NO.2 (See page 55−34)**

47. **REMOVE ANTENNA CORD SUB−ASSY**
(a) Remove the nut and 2 bolts.
(b) Disconnect the connectors.
(c) Remove the 12 clamps and antenna cord sub−assy.

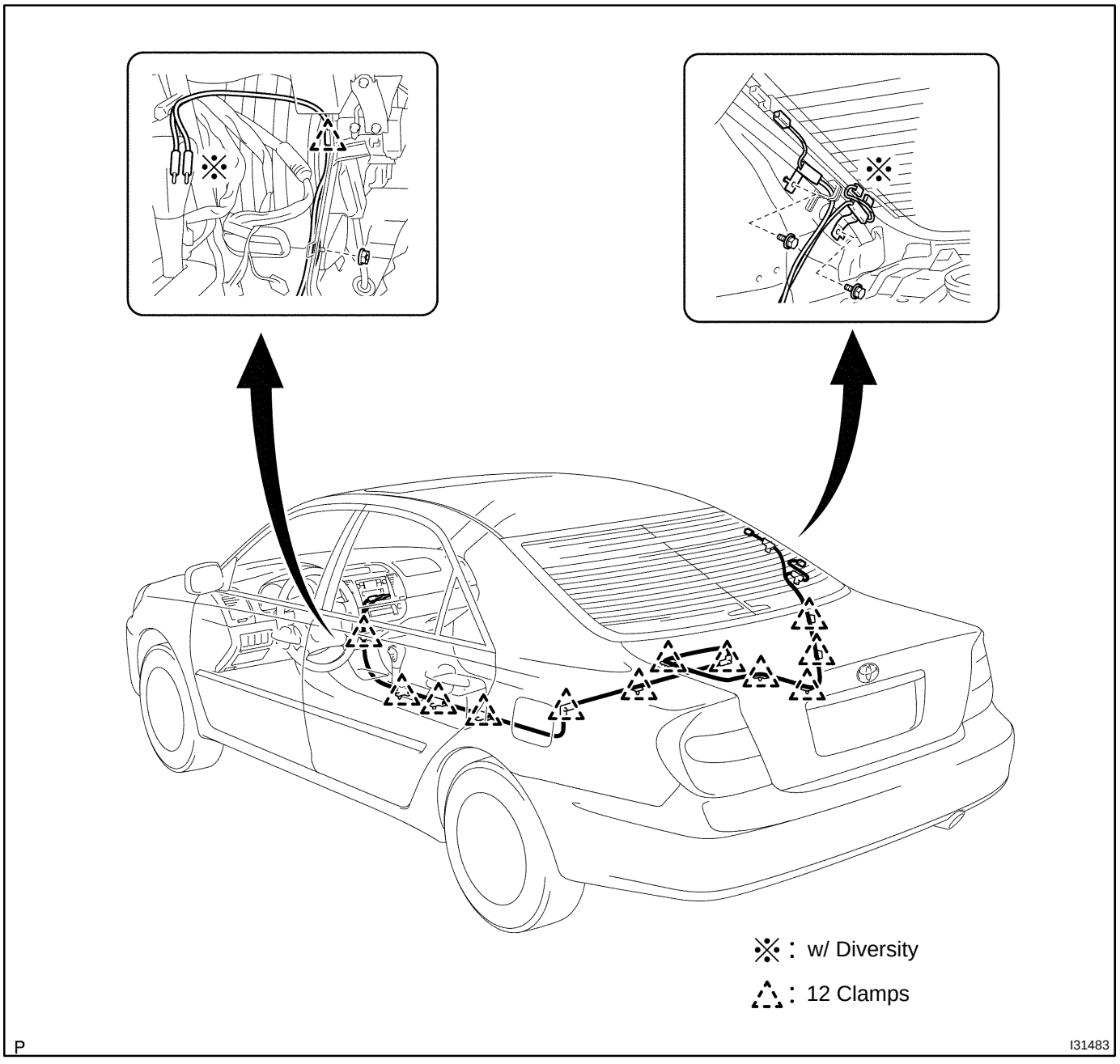

48. INSTALL REAR SEAT INNER W/CENTER BELT ASSY RH (TMC MADE) (See page 61−13)
49. INSTALL REAR SEAT 3 POINT TYPE BELT ASSY OUTER (TMC MADE) (See page 61−13)
50. INSTALL REAR SEAT INNER W/CENTER BELT ASSY LH (TMC MADE) (See page 61−13)
51. INSTALL REAR SIDE SEAT BACK ASSY LH (TMC MADE) (See page 72−32)
52. INSTALL REAR SIDE SEAT BACK ASSY RH (TMC MADE) (See page 72−32)
53. INSTALL REAR SEAT BACK ASSY RH (See page 72−32)
54. INSTALL REAR SEAT BACK ASSY LH (See page 72−32)
55. INSTALL FRONT SEAT ASSY LH (POWER SEAT) (See page 72−23)
56. INSTALL FRONT SEAT ASSY LH (MANUAL SEAT) (See page 72−15)
57. INSTALL FRONT SEAT ASSY RH (POWER SEAT) (See page 72−23)
58. INSTALL FRONT SEAT ASSY RH (MANUAL SEAT) (See page 72−15)

NAVIGATION ANTENNA ASSY

67099−03

REPLACEMENT

HINT:

COMPONENTS: See page 67−1

1. **REMOVE LUGGAGE COMPARTMENT FLOOR MAT**
2. **REMOVE SPARE WHEEL COVER ASSY**
3. **REMOVE LUGGAGE COMPARTMENT TRIM HOOK NO.1 (See page 76−8)**
4. **REMOVE REAR FLOOR FINISH PLATE (See page 76−8)**
5. **REMOVE LUGGAGE COMPARTMENT TRIM COVER INNER LH (See page 76−8)**
6. **REMOVE REAR SEAT CUSHION ASSY (See page 72−32)**
7. **REMOVE REAR SEAT BACK ASSY RH (See page 72−32)**
8. **REMOVE REAR SEAT BACK ASSY LH (See page 72−32)**
9. **REMOVE REAR SIDE SEAT BACK ASSY RH (TMC MADE) (See page 72−32)**
10. **REMOVE REAR SIDE SEAT BACK ASSY LH (TMC MADE) (See page 72−32)**
11. **REMOVE ROOF SIDE GARNISH INNER RH (W/O CURTAIN SHIELD AIR BAG) (See page 76−22)**
12. **REMOVE ROOF SIDE GARNISH INNER LH (W/O CURTAIN SHIELD AIR BAG) (See page 76−22)**
13. **REMOVE ROOF SIDE GARNISH INNER RH (W/ CURTAIN SHIELD AIR BAG) (See page 76−22)**
14. **REMOVE ROOF SIDE GARNISH INNER LH (W/ CURTAIN SHIELD AIR BAG) (See page 76−22)**
15. **REMOVE REAR SEAT SHOULDER BELT COVER RH (See page 61−13 or 61−16)**
16. **REMOVE PACKAGE TRAY TRIM PANEL ASSY (TMC MADE) (See page 67−10)**
17. **REMOVE REAR SEAT 3 POINT TYPE BELT ASSY OUTER (TMC MADE) (See page 61−13)**
18. **REMOVE REAR SEAT INNER W/CENTER BELT ASSY RH (TMC MADE) (See page 61−13)**
19. **REMOVE REAR SEAT INNER W/CENTER BELT ASSY LH (TMC MADE) (See page 61−13)**
20. **REMOVE ROOM PARTITION BOARD LH (TMC MADE) (See page 67−10)**
21. **REMOVE ROOM PARTITION BOARD RH (TMC MADE) (See page 67−10)**

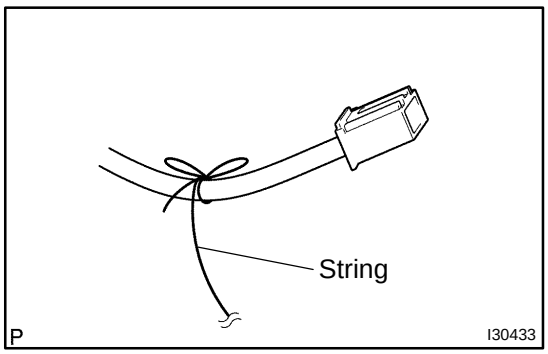

22. **REMOVE NAVIGATION ANTENNA ASSY**

(a) Disconnect the connector.

(b) Tie the string at the tip of the cable of the navigation antenna assy.

(c) Remove the screw.
(d) Remove the clamp and navigation antenna assy.

NOTICE:

As the string is used at the time of installation, remain it putting through the luggage room and the room side.

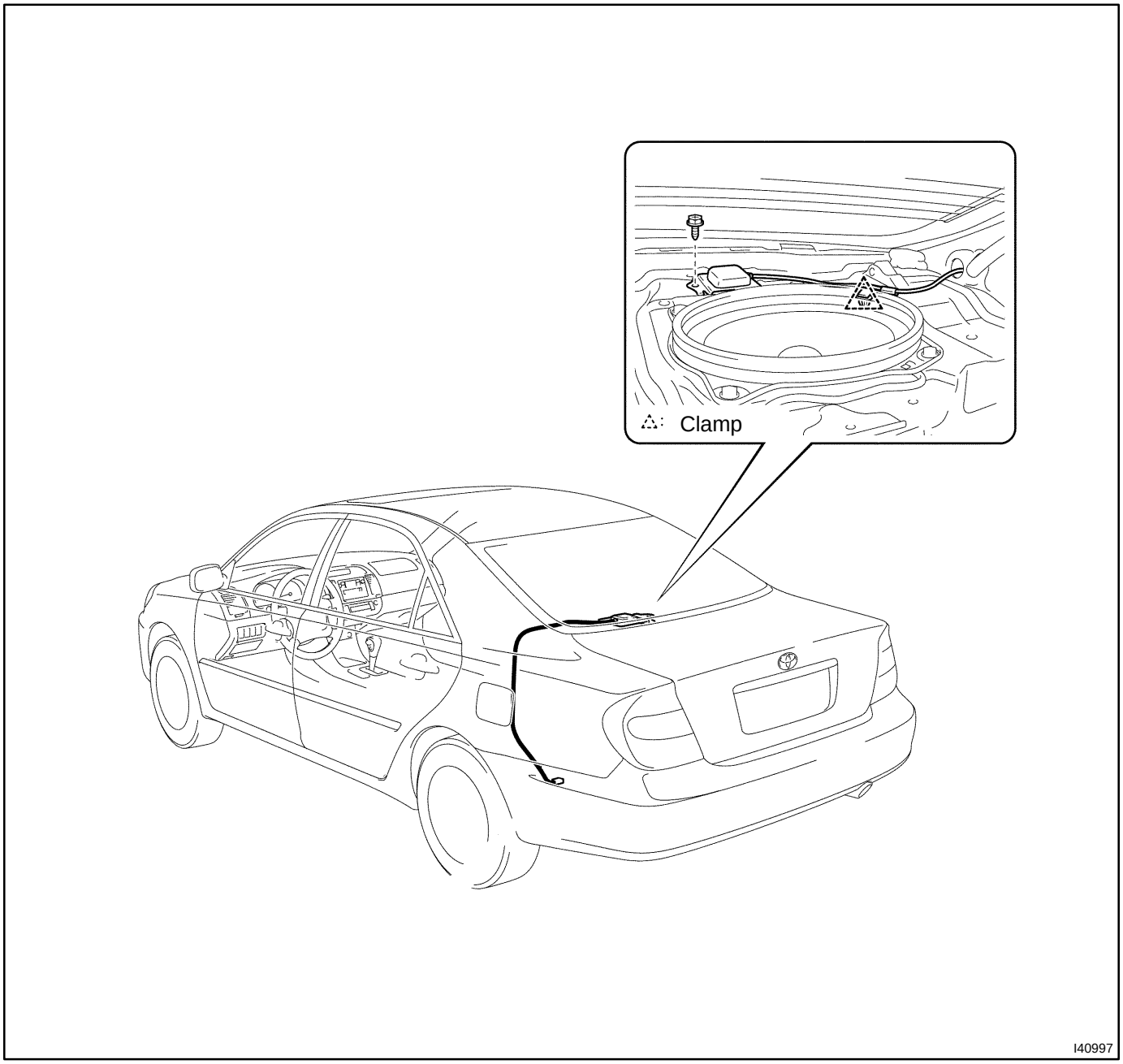

23. INSTALL NAVIGATION ANTENNA ASSY

(a) Detach the string put through the luggage room and the room side from the connector and attach it with a new navigation antenna assy.
(b) Using this string put the navigation antenna assy through the luggage room and the room side.

NOTICE:

To prevent the connector from being damaged, wrap protective tape around the tip of connector of the navigation antenna assy.

(c) Install the navigation antenna assy with screw and clamp.
(d) Connect the connector.

24. **INSTALL REAR SEAT INNER W/CENTER BELT ASSY RH (TMC MADE) (See page 61−13)**
25. **INSTALL REAR SEAT 3 POINT TYPE BELT ASSY OUTER (TMC MADE) (See page 61−13)**
26. **INSTALL REAR SEAT INNER W/CENTER BELT ASSY LH (TMC MADE) (See page 61−13)**
27. **INSTALL REAR SIDE SEAT BACK ASSY LH (TMC MADE) (See page 72−32)**
28. **INSTALL REAR SIDE SEAT BACK ASSY RH (TMC MADE) (See page 72−32)**
29. **INSTALL REAR SEAT BACK ASSY RH (See page 72−32)**
30. **INSTALL REAR SEAT BACK ASSY LH (See page 72−32)**

STEREO COMPONENT AMPLIFIER ASSY

67092−03

REPLACEMENT

HINT:

COMPONENTS: See page 67−1

1. **REMOVE FRONT DOOR SCUFF PLATE RH (See page 71−16)**
2. **REMOVE COWL SIDE TRIM SUB−ASSY RH (See page 71−16)**
3. **REMOVE INSTRUMENT PANEL UNDER COVER SUB−ASSY NO.1 (See page 71−16)**
4. **REMOVE GLOVE COMPARTMENT DOOR PAD (See page 71−16)**
5. **REMOVE INSTRUMENT PANEL SUB−ASSY LOWER (See page 71−16)**

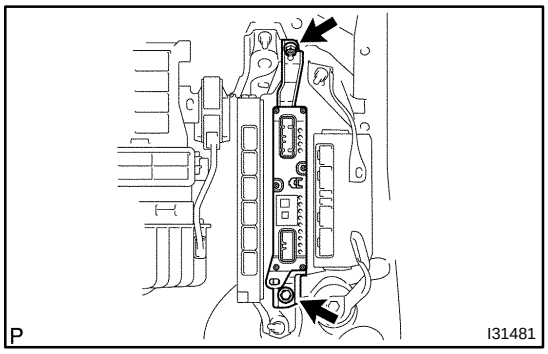

6. **REMOVE STEREO COMPONENT AMPLIFIER ASSY**

(a) Disconnect the connectors.

(b) Remove the 2 nuts and stereo component amplifier assy.

STEERING PAD SWITCH LH

REPLACEMENT

671DT−01

HINT:

- COMPONENTS: SEE PAGE 67−1.
- Installation is in the reverse order of removal.

1. PRECAUTION (SEE PAGE 60−1)
2. DISCONNECT BATTERY NEGATIVE TERMINAL (SEE PAGE 60−1)
3. REMOVE STEERING WHEEL COVER LOWER NO.2
TMC MADE (SEE PAGE 50−9)
TMMK MADE (SEE PAGE 50−21)
4. REMOVE STEERING WHEEL COVER LOWER NO.3
TMC MADE (SEE PAGE 50−9)
TMMK MADE (SEE PAGE 50−21)
5. REMOVE HORN BUTTON ASSY (SEE PAGE 60−25)

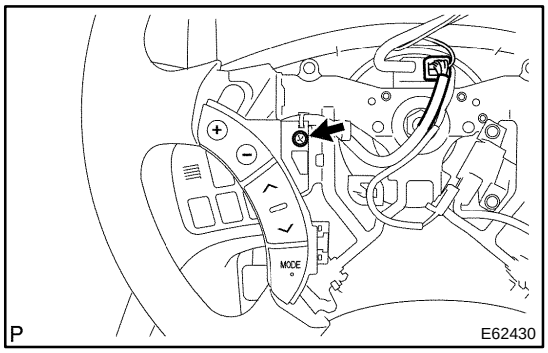

6. REMOVE STEERING PAD SWITCH LH (4 SPOKE STEERING WHEEL ASSY)

(a) Disconnect the connector.
(b) Disconnect the connector of cruise control main switch.
(c) Remove the screw.

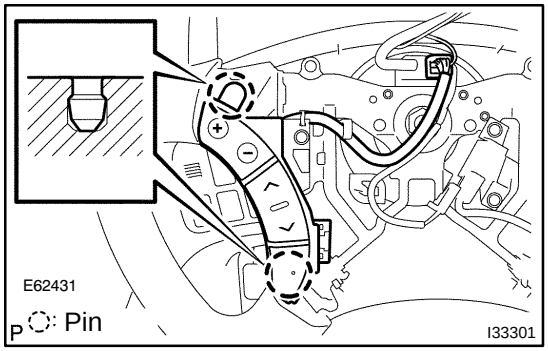

(d) w/o steering pad switch RH:
Release the 2 pins and remove the steering pad switch LH.

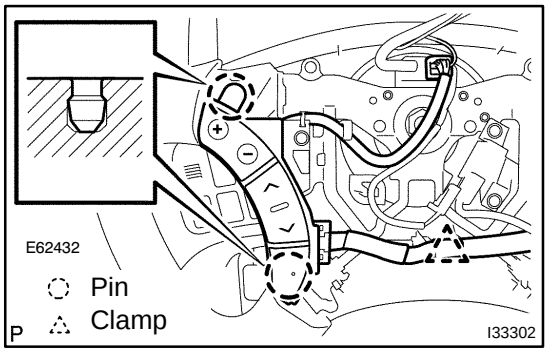

(e) w/ steering pad switch RH:
Remove the clamp.
(f) w/ steering pad switch RH:
Release the 2 pins and release the steering pad switch LH from steering wheel.

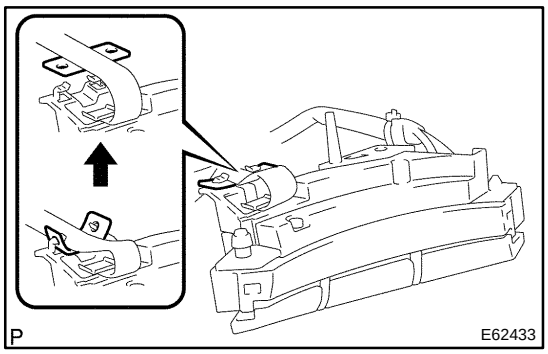

(g) w/ steering pad switch RH:
Release the tab of steering pad switch cable from steering pad switch LH as shown in the illustration.

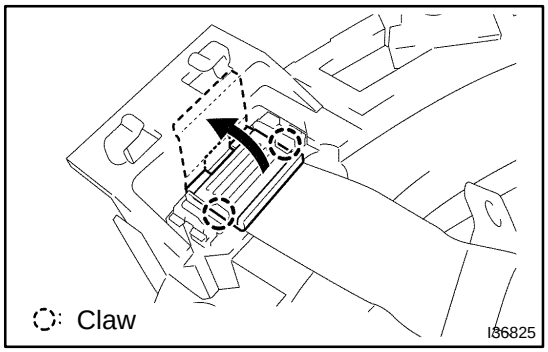

(h) w/ steering pad switch RH:
Disengage the 2 claws as shown in the illustration and open the latch on the top of the connector.

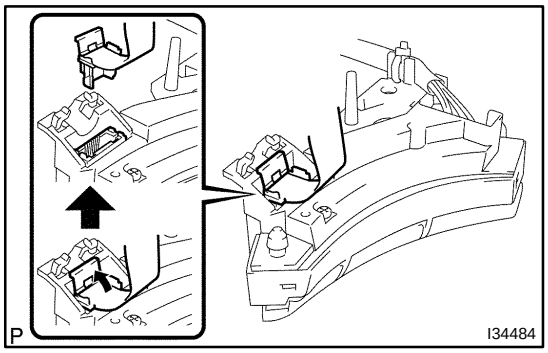

(i) w/ steering pad switch RH:
Pull out the connector while pinching the latch with fingers and disconnect the steering pad switch cable from the steering pad switch LH.

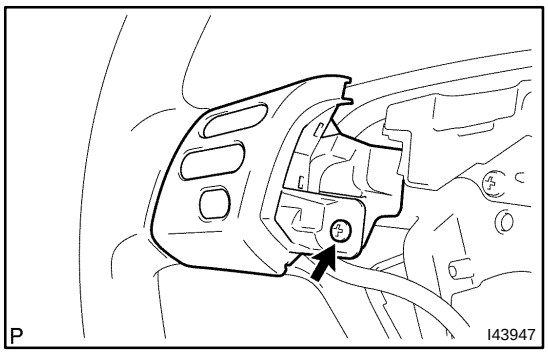

7. REMOVE STEERING PAD SWITCH LH (3 SPOKE STEERING WHEEL ASSY)

(a) Disconnect the connector.
(b) Remove the screw.

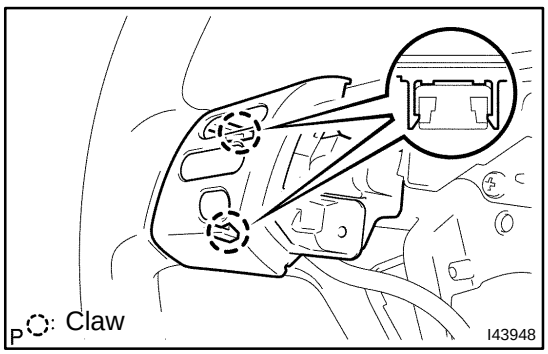

(c) Disengage the 2 claws.
(d) Remove the steering pad switch LH.

8. INSTALL HORN BUTTON ASSY (SEE PAGE 60−25)
9. CONNECT BATTERY NEGATIVE TERMINAL
10. INSPECT SRS WARNING LIGHT (SEE PAGE 60−17)

STEERING PAD SWITCH RH

671DU−01

REPLACEMENT

HINT:

- COMPONENTS: SEE PAGE 67−1.
- Installation is in the reverse order of removal.

1. **PRECAUTION (SEE PAGE 60−1)**
2. **DISCONNECT BATTERY NEGATIVE TERMINAL (SEE PAGE 60−1)**
3. **REMOVE STEERING WHEEL COVER LOWER NO.2**
   TMC MADE (SEE PAGE 50−9)
   TMMK MADE (SEE PAGE 50−21)
4. **REMOVE STEERING WHEEL COVER LOWER NO.3**
   TMC MADE (SEE PAGE 50−9)
   TMMK MADE (SEE PAGE 50−21)
5. **REMOVE HORN BUTTON ASSY (SEE PAGE 60−25)**

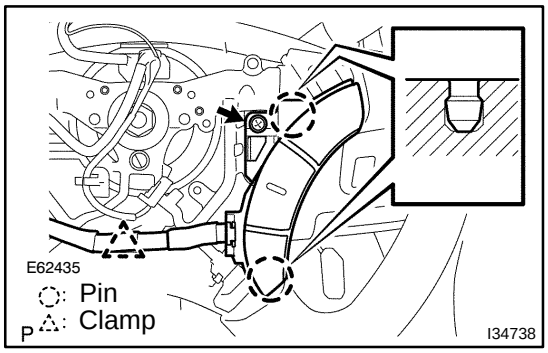

6. REMOVE STEERING PAD SWITCH RH

(a) Remove the screw.

(b) Remove the clamp.

(c) Disengage the 2 pins and release the steering pad switch RH from the steering wheel.

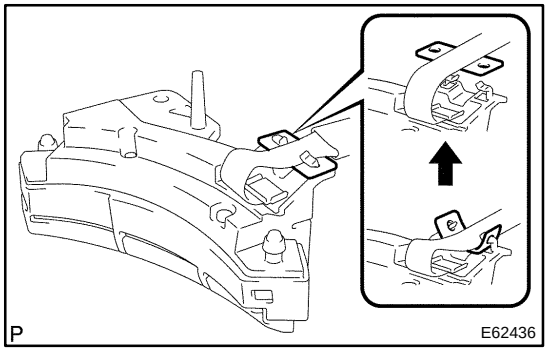

(d) Release the tab of steering pad switch cable from the steering pad switch RH as shown in the illustration.

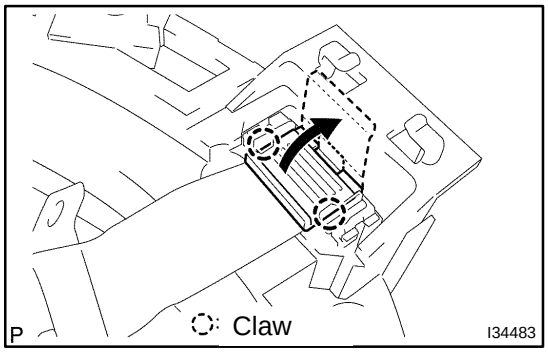

(e) Disengage the 2 claws as shown in the illustration and open the latch on the top of the connector.

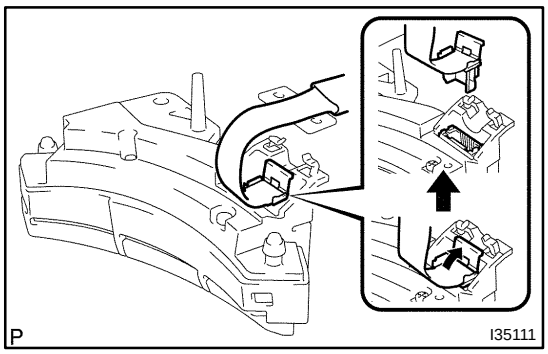

(f) Pull out the connector while pinching the latch with fingers and disconnect the steering pad switch cable from the steering pad switch RH.

7. **INSTALL HORN BUTTON ASSY (SEE PAGE 60−25)**
8. **CONNECT BATTERY NEGATIVE TERMINAL**
9. **INSPECT SRS WARNING LIGHT (SEE PAGE 60−17)**

CIGARETTE LIGHTER ASSY

67096−03

REPLACEMENT

HINT:

COMPONENTS: See page 67−1

1. REMOVE FRONT ASH RECEPTACLE ASSY (See page 71−16)

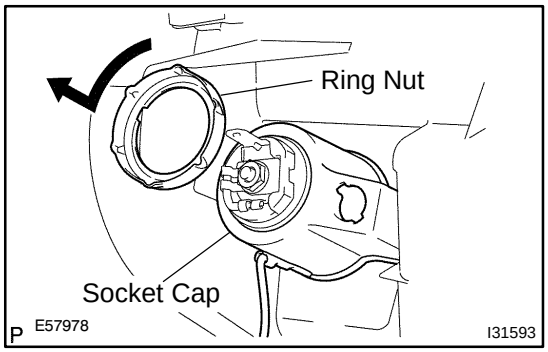

2. REMOVE CIGARETTE LIGHTER ASSY

(a) Rotate the ring nut counterclockwise to remove it.

(b) Remove the cigarette lighter assy from the instrument panel ash receptacle assy.

3. INSTALL CIGARETTE LIGHTER ASSY

(a) Properly position the socket at the cutout of the instrument panel ash receptacle assy and insert them.

(b) Install the socket cap.

(c) Rotate the ring nut clockwise from the backside.

POWER POINT SOCKET ASSY

67098−03

REPLACEMENT

HINT:

COMPONENTS: See page 67−1

1. **REMOVE SHIFT LEVER KNOB SUB−ASSY (M/T TRANSAXLE) (See page 71−16)**
2. **REMOVE CONSOLE PANEL UPPER REAR(See page 71−16)**
3. **REMOVE INSTRUMENT PANEL CUP HOLDER (W/O ASHTRAY)(See page 71−16)**
4. **REMOVE FRONT ASH RECEPTACLE ASSY (W/ ASHTRAY)(See page 71−16)**
5. **REMOVE CONSOLE PANEL SUB−ASSY UPPER(See page 71−16)**

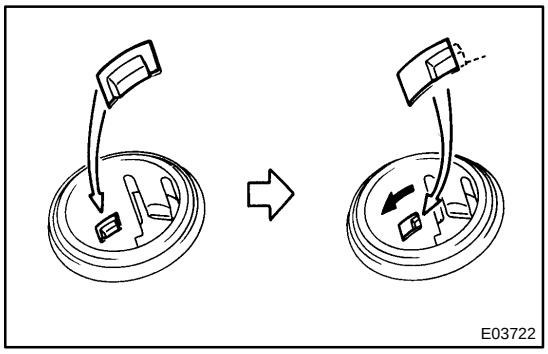

6. REMOVE POWER POINT SOCKET ASSY

(a) Turn the socket in the circumference direction as shown in the illustration, disengage the claw between the socket and the power pint socket cover, and push out the socket to the room side.

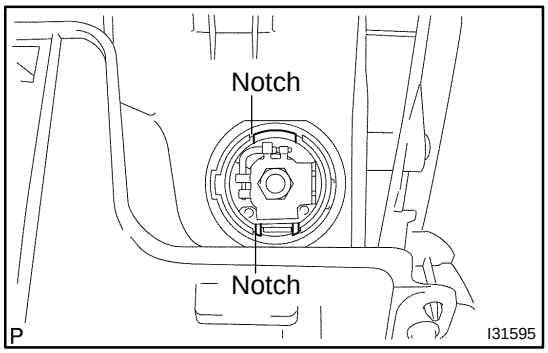

(b) Align the socket with the notch on the power point socket cover, remove the power point socket assy to the room side.

7. INSTALL POWER POINT SOCKET ASSY

(a) Align the socket with the notch on the power point socket cover, push the power point socket assy into as hard as possible and install it.

POWER POINT SOCKET ASSY RR

67095−03

REPLACEMENT

HINT:

COMPONENTS: See page 67−1

1. **REMOVE SHIFT LEVER KNOB SUB−ASSY (M/T TRANSAXLE) (See page 71−16)**
2. **REMOVE CONSOLE PANEL UPPER REAR (See page 71−16)**
3. **REMOVE CONSOLE BOX CARPET (See page 71−16)**
4. **REMOVE RR CONSOLE BOX (See page 71−16)**

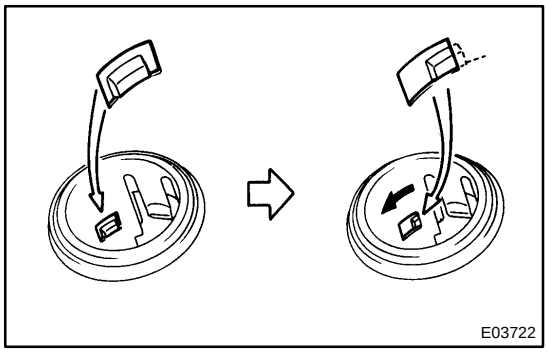

5. **REMOVE POWER POINT SOCKET ASSY RR**

(a) Remove the clamp.

(b) Turn the socket in the circumference direction as shown in the illustration, disengage the claw between the socket and the power outlet socket cover RR, and push out the socket to the room side.

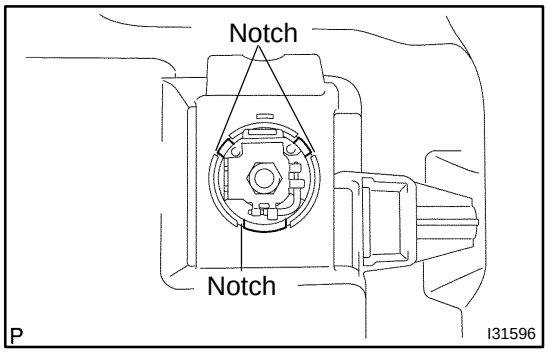

(c) Align the socket with the notch on the power outlet socket cover RR, remove the power point socket assy RR to the room side.

6. **INSTALL POWER POINT SOCKET ASSY RR**

(a) Align the socket with the notch on the power outlet socket cover RR, push the power point socket assy RR into as hard as possible and install it.

WINDOW GLASS (ANTENNA WIRE)

REPAIR

67094−02

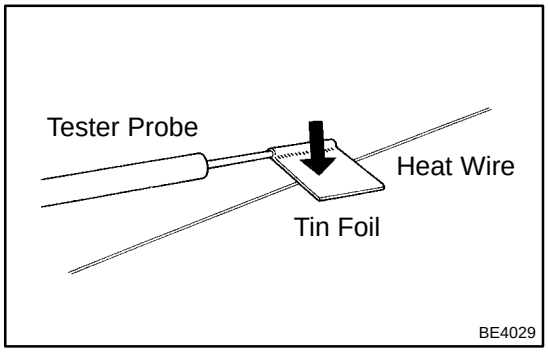

1. INSPECT WINDOW GLASS (ANTENNA WIRE)

NOTICE:

When cleaning the glass, use a soft, dry cloth, and wiper the glass in the direction of the wire. Take care not to damage the wires. Do not use detergents or glass cleaners with abrasive ingredients. When measuring voltage, wind a piece of tin foil around the top of the negative probe and press the foil against the wire with your finger, as shown in the illustration.

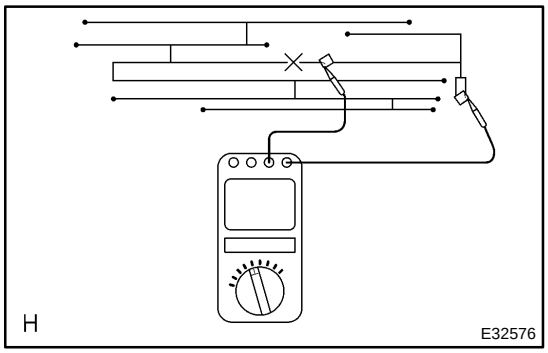

(a) Inspect the continuity, at the center of each antenna wire, as shown in the illustration.

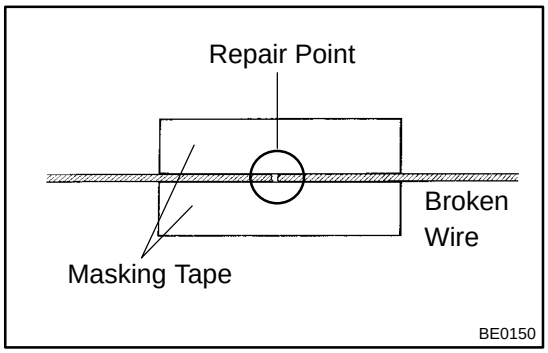

2. REPAIR WINDOW GLASS (ANTENNA WIRE)

(a) Clean the broken wire tips with a grease, wax and silicone remover.

(b) Place the masking tape along both sides of the wire to be repaired.

(c) Thoroughly mix the repair agent (Dupont paste No. 4817).

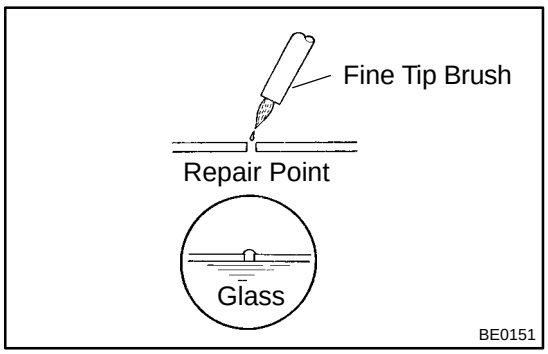

(d) Using a fine tip brush, apply a small amount to the wire.

(e) After a few minutes, remove the masking tape.

(f) Do not repair the defogger wire for at least 24 hours.

POWER SOURCE

LOCATION

6805I−01

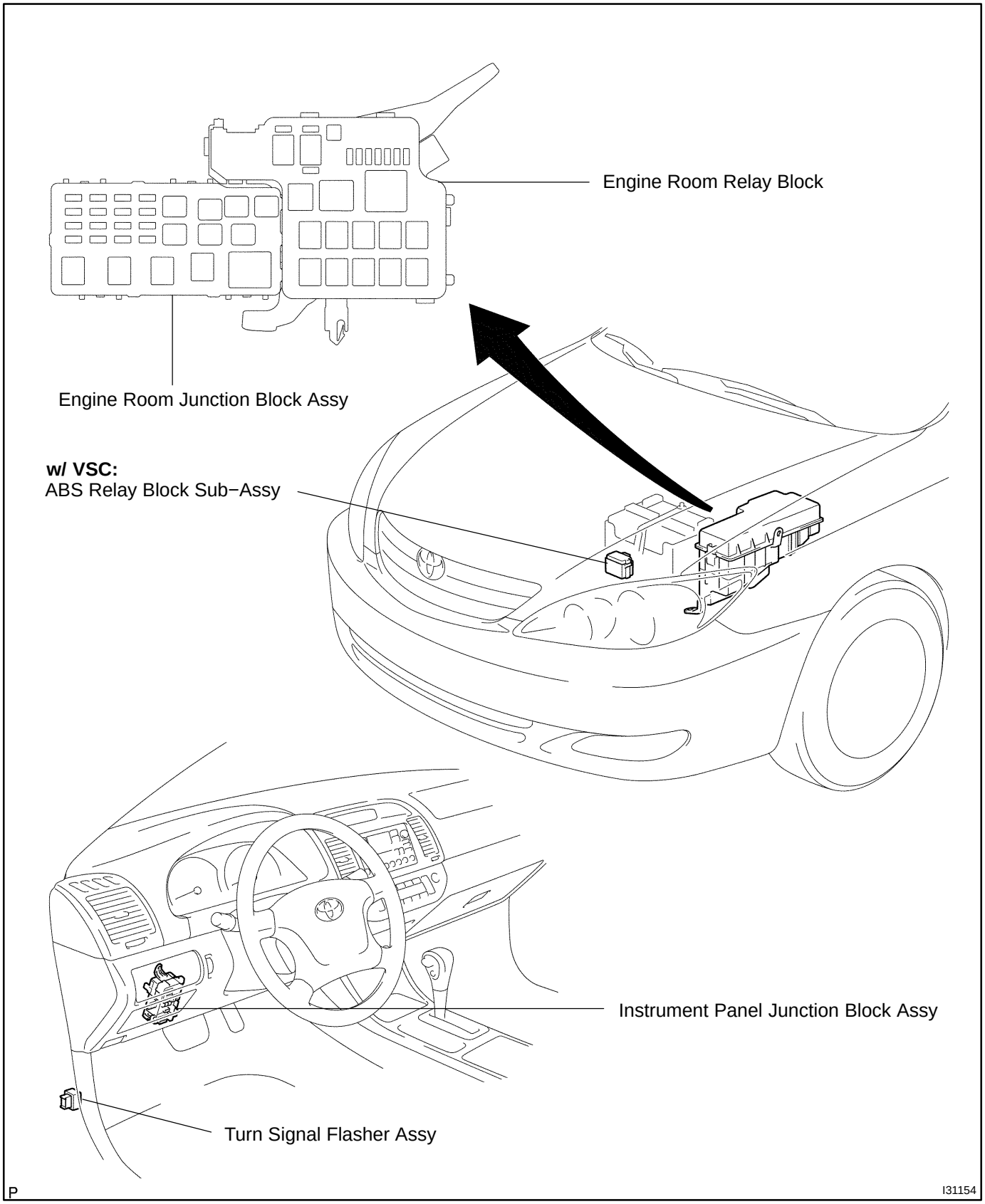

Engine Room Junction Block Assy:

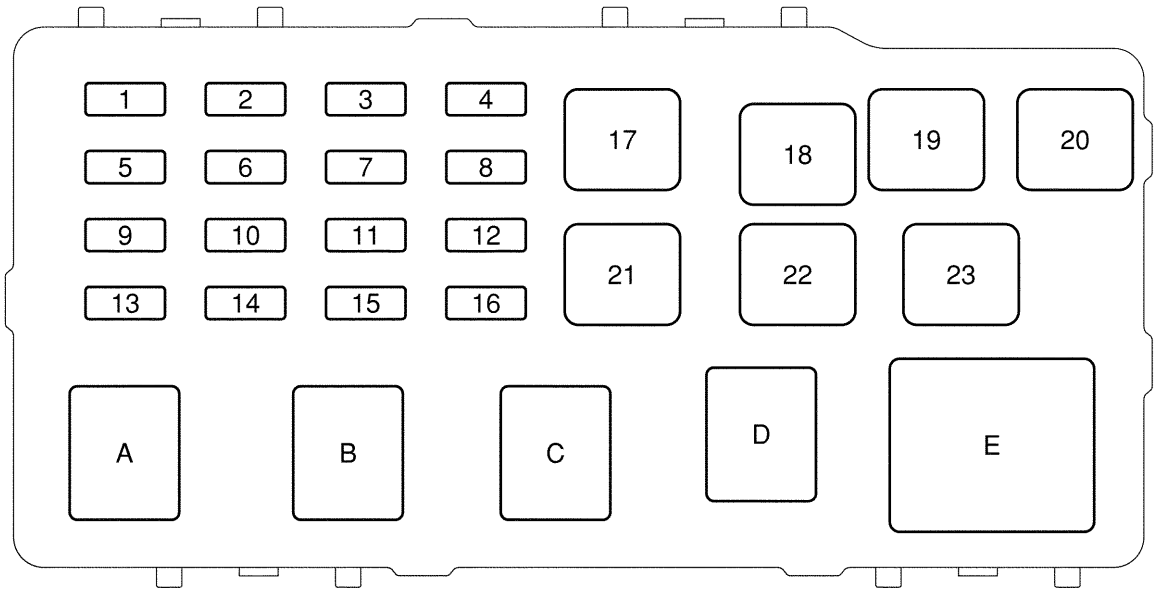

RELAY:

A, EFI
B, HORN
C, C/ OPN
D, FAN No.1
E, HEAD

FUSE:

1, A/ F	25 A	14, D.C.C	30 A
2, DOOR 1	25 A	15, IG 2	10 A
3, −		16, ST	5 A
4, AM 2	30 A	17, ADJ PDL	30 A
5, −		18, CDS	30 A
6, EFI	20 A	19, ABS No.2	40 A
7, ALT−S	5 A	20, MAIN	40 A
8, HEAD LH UPR	10 A	21, ABS No.3	30 A
9, ETCS	10 A	22, HTR	50 A
10, HORN	10 A	23, RDI	30 A
11, IGN	15 A		
12, HEAD RH UPR	10 A		
13, HAZ	15 A		

Engine Room Relay Block:

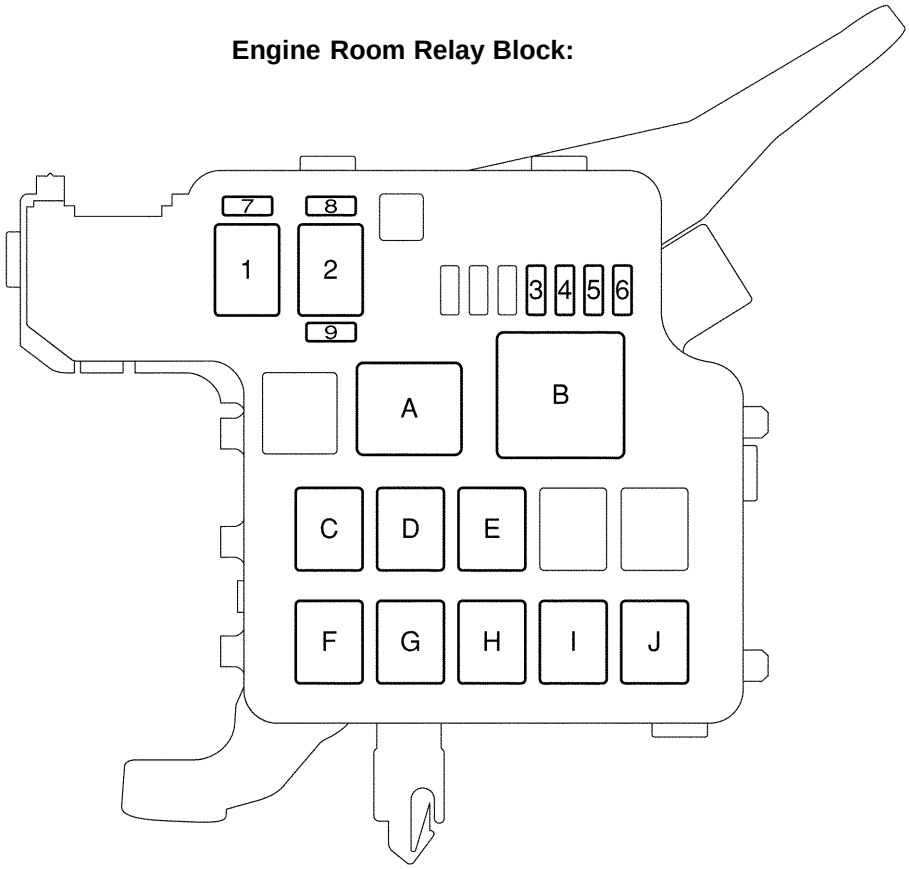

RELAY:

A, ST	H, FAN No.3
B, HTR	I, ADJ PDL
C, FAN No.2	J, DRL No.4
D, DRL No.3	
E, DRL No.2	
F, A/ F HTR (1MZ)	
G, MG CLT	

FUSE:

1, ABS No.1	50 A
2, ALT	120 A (2AZ)
	120 A (1MZ)
3, A/C	10 A
4, DRL	5 A
5, HEAD RH LWR	15 A
6, HEAD LH LWR	15 A
7, SPARE	5 A
8, SPARE	10 A
9, SPARE	15 A

P

I44138

Instrument Panel Junction Block Assy:

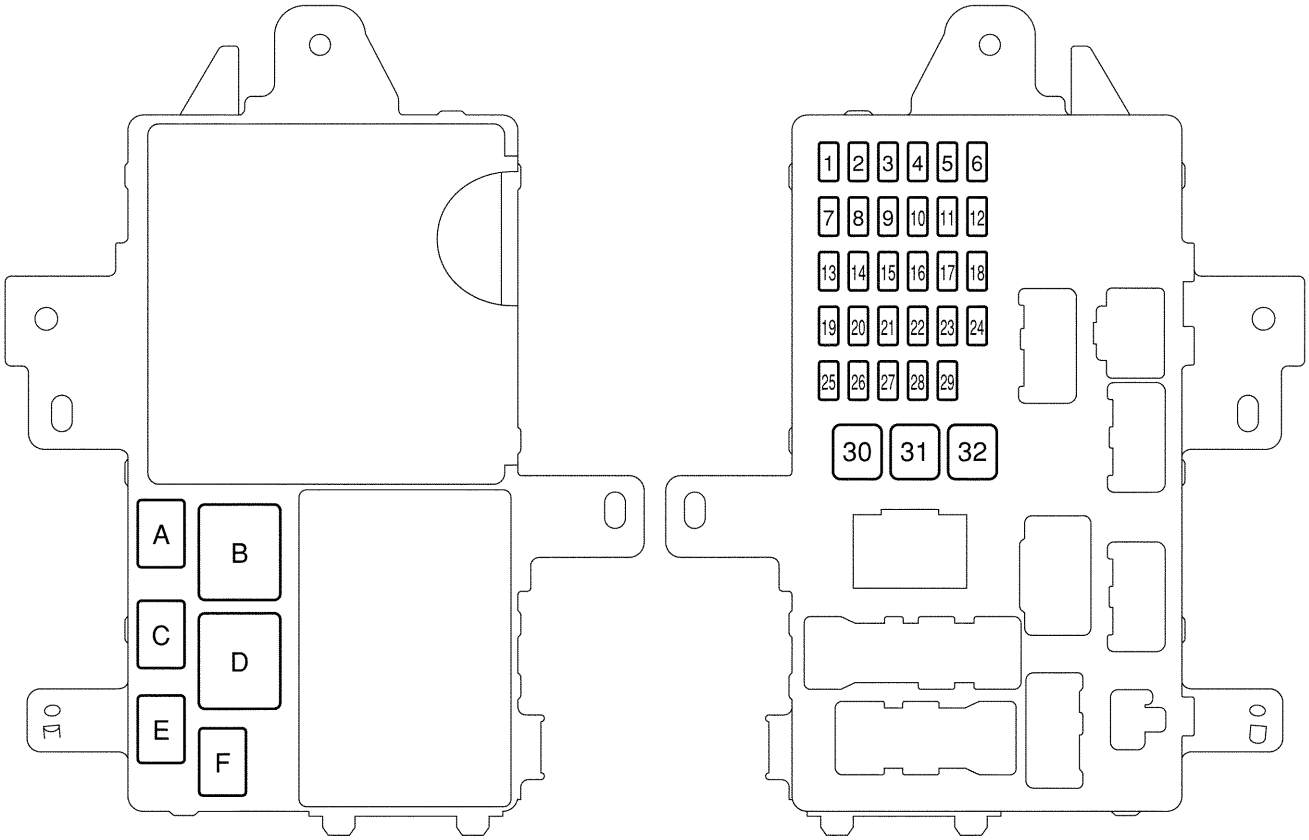

RELAY:

A, FOG	
B, RR DEF	
C, TAIL	
D, IG 1	
E, ACC	
F, PWR	

FUSE:

1, ECU−B	10 A	12, MIR HTR	10 A	23, WASHER	15 A
2, DOME	7.5 A	13, AM 1	5 A	24, FAN RLY	10 A
3, CIG	15 A	14, FOG	15 A	25, STOP	15 A
4, ECU−ACC	5 A	15, −		26,	
5, RAD No.2	10 A	16, GAUGE 2	10 A	27,	
6, POWER POINT	15 A	17, PANEL	10 A	28,	
7, RAD No.1	20 A	18, TAIL	10 A	29,	
8, GAUGE 1	10 A	19, −		30, PWR SEAT	30 A
9, ECU−IG	10 A	20, −		31, PWR No.1	30 A
10, WIPER	25 A	21, OBD	7.5 A	32, DEF	40 A
11, HTR	10 A	22, SEAT HTR	20 A		

P

I31157

w/ VSC:

ABS Relay Block Sub−Assy:

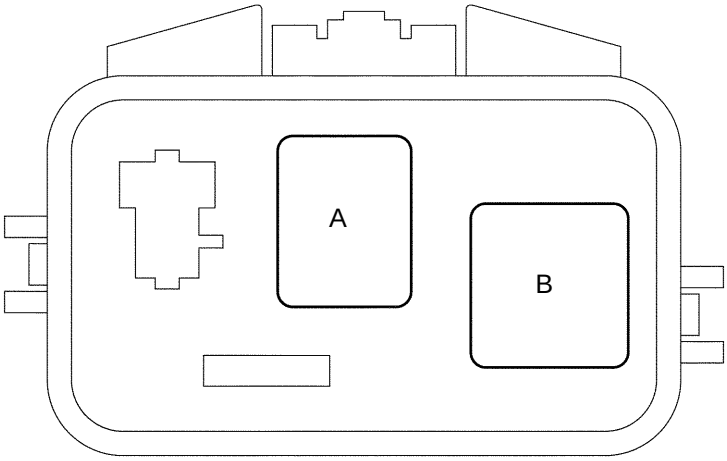

RELAY:

A, VSC CUT
B, VSC MTR

I43451

HORN SYSTEM

PROBLEM SYMPTOMS TABLE

6902L−06

Symptom	Suspected Area	See Page
Horn does not sound.	1. Horn button switch	−
	2. High pitched horn	−
	3. Low pitched horn	−
	4. HORN relay	69−3
	5. Wire harness	−

6902K−05

LOCATION

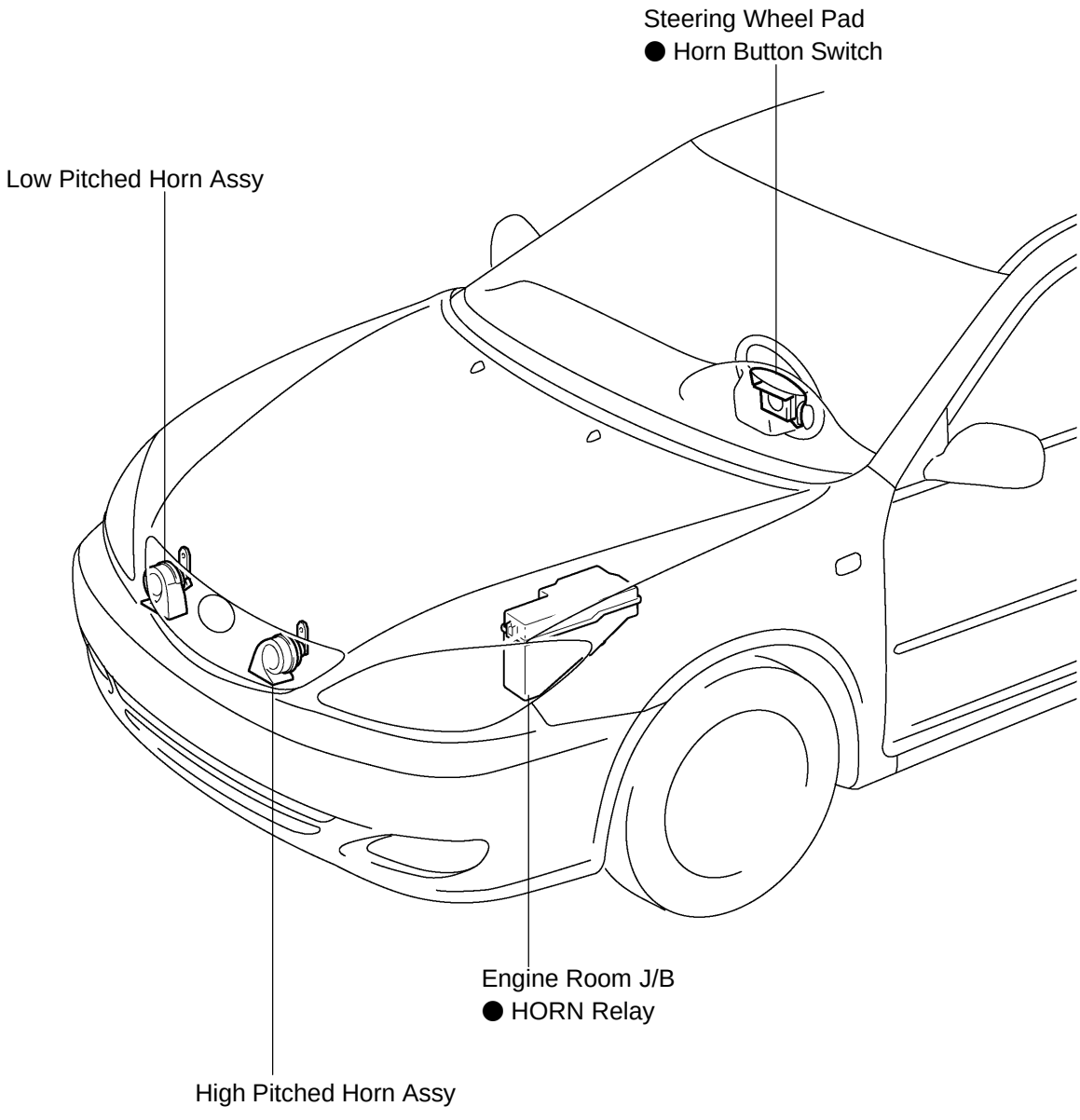

O

B74619

6902M−05

INSPECTION

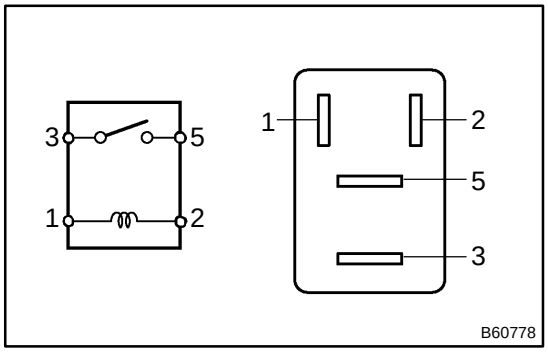

1. INSPECT RELAY (HORN)

(a) Remove the HORN relay from the engine room R/B.

(b) Check the HORN relay resistance.

Standard:

Tester Connection	Specified Condition
3 − 5	1 kΩ or higher
3 − 5	Below 1 Ω (when battery voltage is applied to terminals 1 and 2)

If the result is not as specified, replace the relay.

HORN ASSY

69090−01

REPLACEMENT

1. REMOVE HIGH PITCHED HORN ASSY

(a) Disconnect the connector.

(b) Remove the bolt and horn.

2. REMOVE LOW PITCHED HORN ASSY

(a) Disconnect the connector.

(b) Remove the bolt and horn.

3. INSTALL HIGH PITCHED HORN ASSY

(a) Place the stay onto the baffle part in the radiator support upper. Then install the horn with the bolt.
Torque: 20 N·m (204 kgf·cm, 15 ft·lbf)

(b) Connect the connector.

4. INSTALL LOW PITCHED HORN ASSY

(a) Place the stay onto the baffle part in the radiator support upper. Then install the horn with the bolt.
Torque: 20 N·m (204 kgf·cm, 15 ft·lbf)

(b) Connect the connector.

GARAGE DOOR OPENER SYSTEM

69059−01

REGISTRATION

1. NEW CODE REGISTRATION

HINT:

- The garage door opener is built in the map lamp assy. When transmitter codes for garage door, gate, entry gate, door lock, home lighting system or security system are registered with the garage door opener, be sure to register them again whenever replacing the map lamp assy.
- After the map lamp assy has been replaced, register transmitter codes with the garage door opener (Registration mode).

NOTICE:

- **While the transmitter code for a system (garage, door, gate, etc.) is being registered, the system may operate. During code registration and while the system is in operation, be sure that no people or objects are in the way.**
- **Be sure to stop the engine and remove the key from the ignition switch before transmitter code registration.**
- **The garage door opener does not apply to systems manufactured before April 1, 1982 and systems that do not comply with the Federal Safety Standards.**
- **Garage doors without a jam protection function do not meet the Federal Safety Standards.**

HINT:

- Every one of the garage door opener switches can have only one transmitter code; total 3 transmitter codes can be registered with the garage door opener.
- Even if the battery is disconnected, transmitter codes registered with the garage door opener will not be erased.
- Even if you attempt to rewrite the transmitter code registered with the garage door opener and the attempt has failed, the registered transmitter code will not be erased.

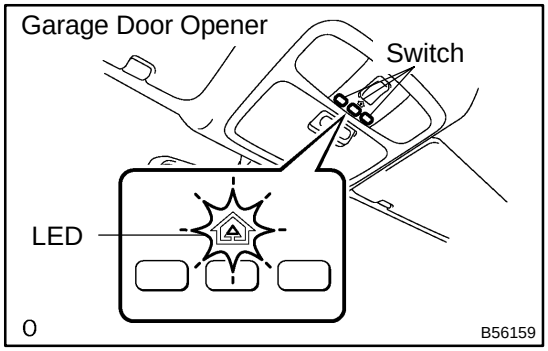

(a) Select a switch of the garage door opener for transmitter code registration.

(b) Press and hold the selected switch for 20 seconds. Then, the garage door opener enters registration mode.

HINT:

When the garage door opener is in registration mode, the LED changes from ON to flashing at a cycle of 1 Hz. (In the case of the ”rolling code” type, the LED will flash at a cycle of 8.8 Hz for 1.6 seconds at first and then change the flash cycle to 1 Hz after the garage door opener has entered registration mode.)

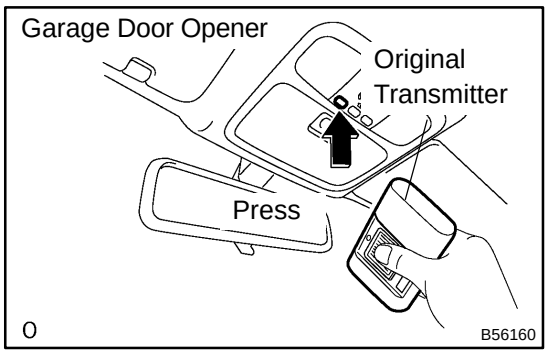

(c) After the garage door opener has entered registration mode, bring the original transmitter of the system within 1−inch of the garage door opener while pressing the switch of the garage door opener. Under this condition, press the original transmitter.

(d) When the transmitter code registration has been completed correctly, the LED of the garage door opener flashes at a cycle of 5.6 Hz. When this happens, release both the switch and the original transmitter.

HINT:

- If the code registration has failed, the battery of the original transmitter may be weak or the system may not meet the garage door opener. In this case, press the original transmitter repeatedly. Some transmitters may need 1 to 2 seconds to stop transmitting signals.
- If the transmitter code registration has not been completed in 90 seconds after the garage door opener has entered registration mode, the garage door opener will enter low power mode (See step c).

Timing Chart of Registration Mode:

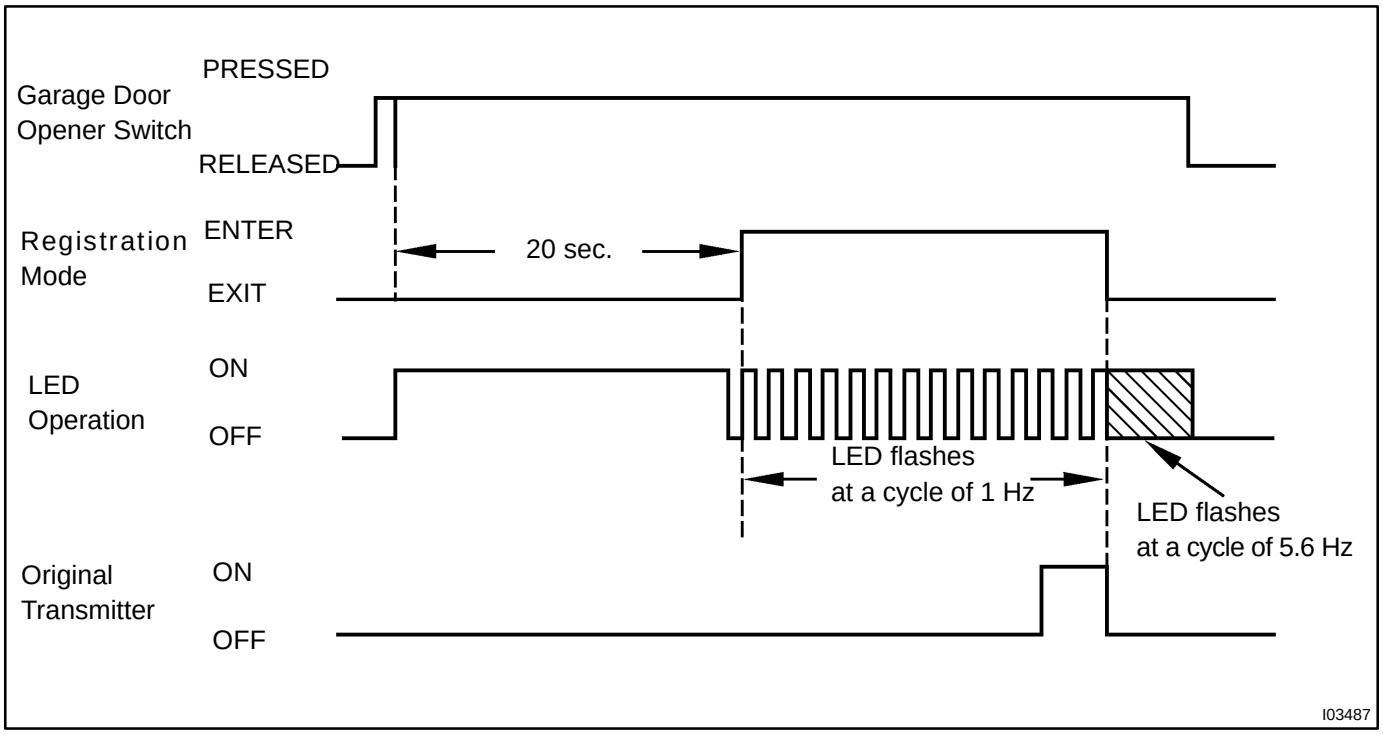

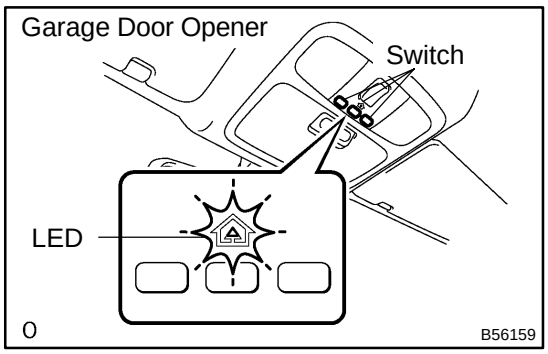

2. Erase the transmitter codes (Clear mode).

HINT:

- All the transmitter codes registered in the garage door opener are erased at the same time (maximum 3 codes).
- If the switches are released within 10 seconds after the transmitter codes have been erased, the garage door opener will enter registration mode.
- If the switches are held for 10 seconds or more after the transmitter codes have been erased, default codes will be set to all the 3 switches of the garage door opener. With this default code, you can check operation of the garage door opener using a tester.

(a) Press and hold the 2 switches at both ends of the garage door opener simultaneously for 20 seconds. Then, the LED starts flashing at a cycle of 5.6 Hz. Releasing the switches will end clear mode.

Timing Chart of Clear Mode:

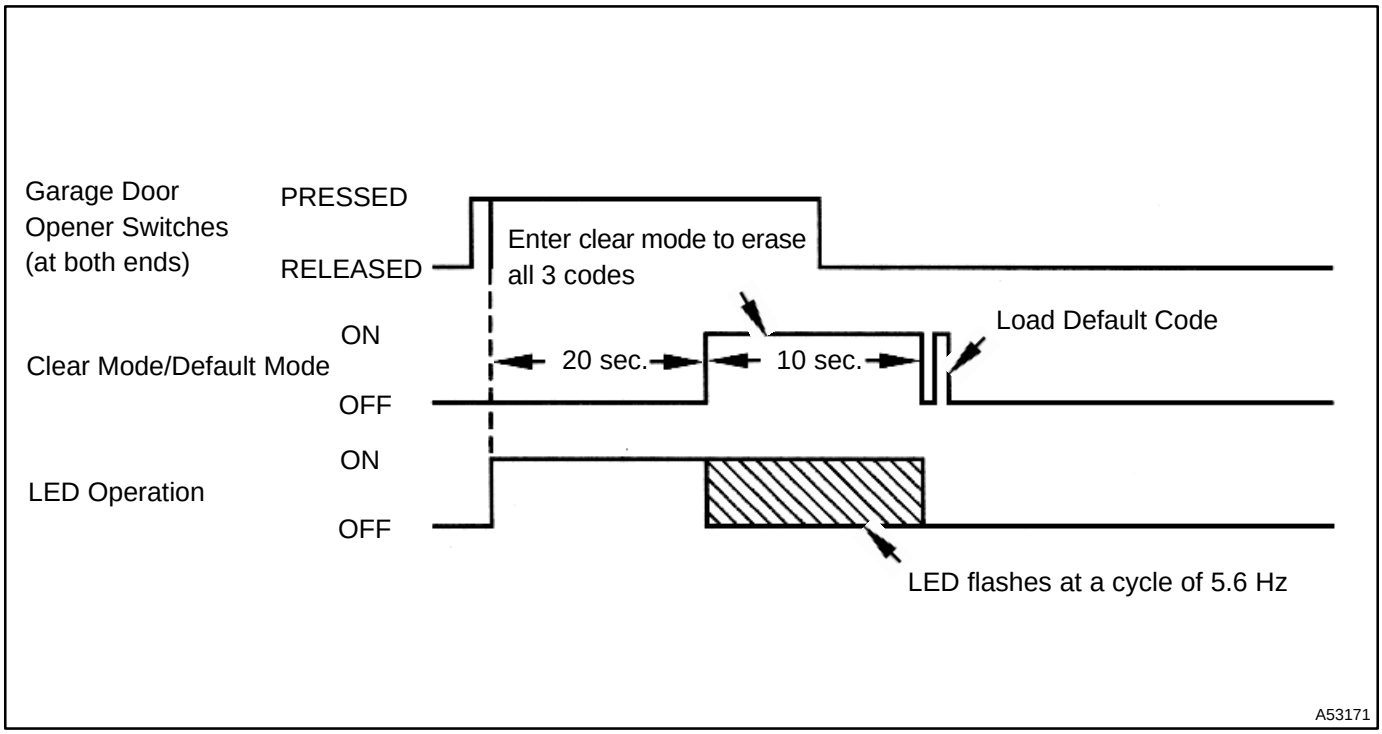

3. Low power mode:

(a) If the switch of the garage door opener is held for 100 seconds or more, the garage door opener will enter low power mode to economize the power consumption. When the garage door opener has entered low power mode, the LED goes off.

6902T−03

INSPECTION

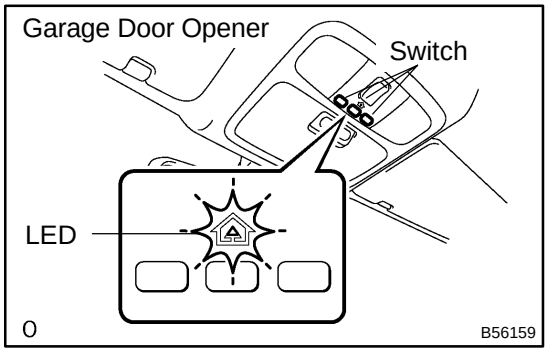

1. INSPECT GARAGE DOOR OPENER

(a) Press the switch and check that each LED (red) lights up. Even if only one switch is found not to light up, replace it.

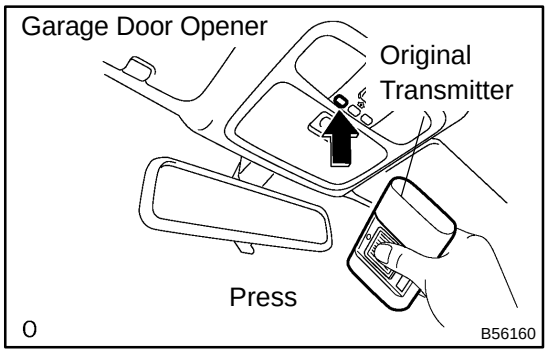

2. INSPECT GARAGE DOOR OPENER REGISTRATION AND TRANSMITTING

HINT:

Use the home link tester made by KENT MORE for this test. As it is necessary to register the transmitter code of the home link tester, erase the customer's code. When the inspection completes, please register the customer's code again.

(a) Register the transmitter code of the home link tester for inspection (See page 69−5 for further details).

HINT:

If the transmitter code can not be registered, replace the garage door opener.

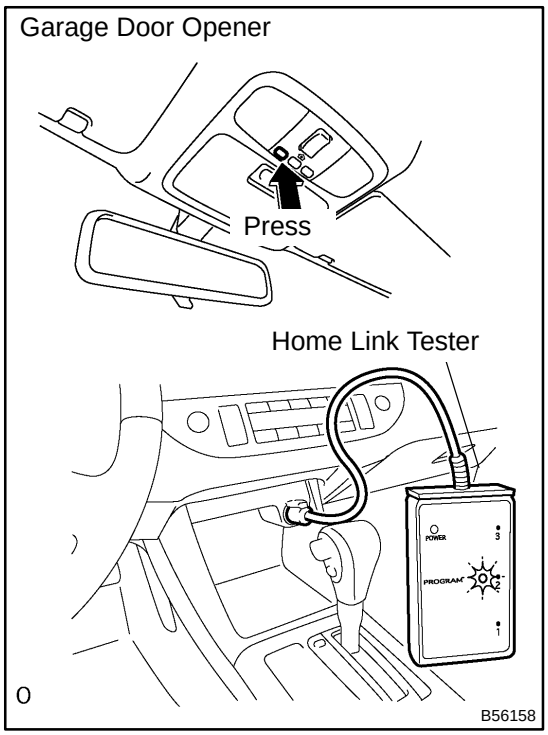

(b) Press the switch in which an inspection code has been registered and check that the LED (green) of the home link tester lights up.

HINT:

If the LED (green) does not light up, replace the garage door opener.

POWER WINDOW CONTROL SYSTEM

700H6−02

ON−VEHICLE INSPECTION

1. CHECK POWER WINDOW (MANUAL OPERATION FUNCTION)

(a) Turn the ignition switch ON.

(b) Check that the door glass moves up when the power window regulator master switch is pulled UP halfway, and the door glass moves down when the switch is pushed DOWN halfway.

(c) Check that the door glass moves up when the power window regulator switch is pulled UP, and the door glass moves down when the switch is pushed DOWN.

(d) Check that the door glasses other than the driver side door glass do not operate when the window lock switch is turned to LOCK.

2. CHECK AUTOMATIC OPERATION FUNCTION

HINT:

Only steps (a), (b), and (d) are applicable to the models without the jam protection function.

(a) Turn the ignition switch ON.

(b) Check that the AUTO UP function operates to fully close the door glass when each window switch of the regulator master switch is pulled UP fully.

(c) Check that the AUTO DOWN function operates to fully open the door glass when each window switch of the regulator master switch is pushed DOWN fully.

(d) Check that the door glass stops when the applicable switch is pulled UP during AUTO DOWN operation. (However, if the switch is held in the UP position, it will change to manual operation.)

(e) Check that the door glass stops when the applicable switch is pushed DOWN during AUTO UP operation. (However, if the switch is held in the DOWN position, it will change to manual operation.)

3. CHECK JAM PROTECTION FUNCTION (FOR DRIVER SIDE DOOR GLASS OF MODELS W/ JAM PROTECTION FUNCTION)

(a) Check the basic function.

NOTICE:

- **Do not check this function using a part of your body such as a hand. Also, pay thorough attention that nothing gets caught by accident in this process.**
- **If the power window regulator motor assembly has just been reset, raise and lower the door glass several times using AUTO and MANUAL operation before performing check.**

HINT:

The jam protection function only works during UP operation.

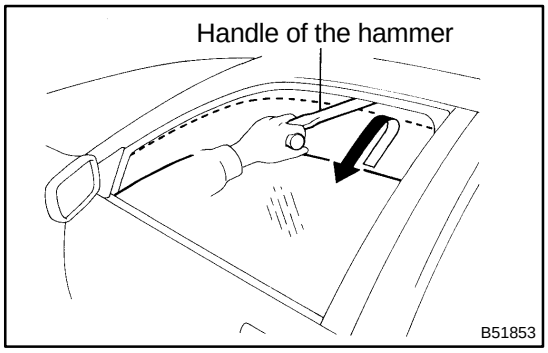

(1) Fully open the door glass.

(2) Insert the handle of the hammer when the door glass is almost in the fully closed position.

(3) Try to close the door glass with AUTO UP and MANUAL UP operation, check that the door glass moves down about 200 mm (7.87 in.) and stops there, so that the hammer handle is not caught.

HINT:

The door glass goes down by about 50 mm. However, when the opening between the glass and body is less than 200 mm, the door glass goes down by 200 mm or keeps going down for 5 seconds, and then stops.

(4) During DOWN operation, check that the door glass does not move up even when the window regulator master switch is pulled UP.

700H7−02

INSPECTION

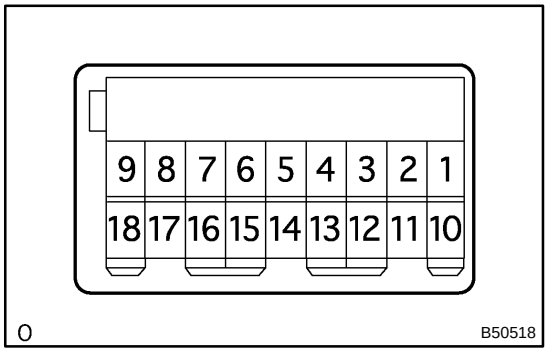

1. INSPECT POWER WINDOW REGULATOR MASTER SWITCH ASSY

(a) Check the continuity between each terminal of the connector.

NOTICE:

Whether the operation is good or bad can be judged by the basic function check, because the continuity cannot be checked by UP/DOWN operation of the driver side switch.

Standard (Window unlock):

Switch position	Passenger Side Terminals No.	Rear RH Terminals No.	Rear LH Terminals No.
UP	6 − 13 *1 (6 − 18 *2), 1 − 15	6 − 18 *1 (6 − 10 *2), 1 − 16	6 − 12, 1 − 10 *1 (1 − 13 *2)
OFF	1 − 13 *1 (1 − 18 *2), 1 − 15	1 − 18 *1 (1 − 10 *2), 1 − 16	6 − 12, 1 − 10 *1 (1 − 12 *2)
DOWN	6 − 15, 1 − 13 *1 (1 − 18 *2)	6 − 16, 1 − 18 *1 (1 − 10 *2)	6 − 10 *1 (6 − 13 *2), 1 − 12

Standard (Window lock):

Switch position	Passenger Side Terminals No.	Rear RH Terminals No.	Rear LH Terminals No.
UP	6 − 13 *1 (6 − 18 *2)	6 − 18 *1 (6 − 10 *2)	6 − 12
OFF	13 − 15 *1 (18 − 15 *2)	16 − 18 *1 (1 − 10 *2)	10 − 12
DOWN	6 − 15	6 − 16	6 − 10 *1 (6 − 13 *2)

*1: w/ Jam protection *2: w/o Jam protection

If the continuity is not as specified, replace the switch.

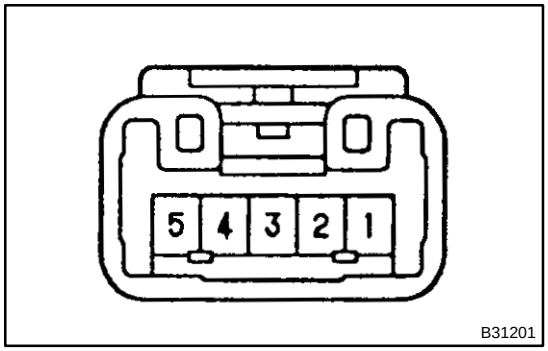

2. INSPECT POWER WINDOW REGULATOR SWITCH ASSY

(a) Check the continuity between each terminal of the connector when operating the switch.

Standard:

Switch position	Terminals No.	Condition
UP	1 − 2 3 − 4	Continuity
OFF	1 − 2 3 − 5	Continuity
DOWN	1 − 4 3 − 5	Continuity

If the continuity is not as specified, replace the switch.

3. INSPECT POWER WINDOW REGULATOR MOTOR ASSY LH

NOTICE:

- **Be sure not to apply battery voltage to terminals 2, 3 and 6 of the power window regulator motor assy LH connector, because it might damage the pulse sensor and the limit switch.**
- **Be sure to reset the power window regulator motor assembly (initial position setting of the limit switch) when the power window regulator motor assy LH is installed to the regulator.**

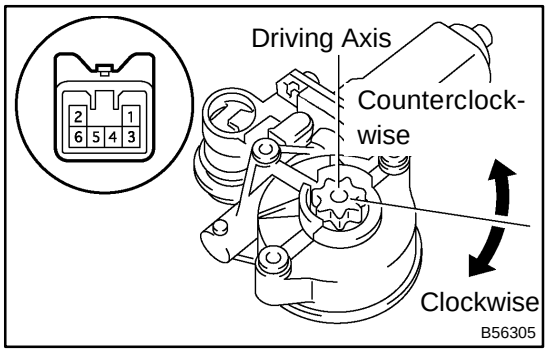

(a) Inspect operation of the front LH power window regulator motor assembly.

(1) When adding battery voltage to each connector terminal, check that the motor operates smoothly.

Standard:

Measurement condition	Operational direction
Battery positive − Terminal 5 Battery negative − Terminal 4	Clockwise
Battery positive − Terminal 4 Battery negative − Terminal 5	Counterclockwise

(b) Check operation of the PTC inside the power window regulator motor.

NOTICE:

Work must be performed with the power window regulator and door glass installed to the vehicle.

(1) Set the DC 400 A probe to terminal 4 or 5 of the wire harness.

NOTICE:

Match the arrow mark of the probe with the current direction.

(2) Set the door glass at the fully closed position.

(3) When approximately 60 seconds have passed after fully closing the door glass, check how long the current takes to change from approximately 16 − 34 A to less than 1 A when pulling the power regulator switch UP furthermore (at initial time).

Standard: Approximately 4 − 90 seconds

(4) When approximately 60 seconds have passed after the cut−off check, check that the door glass goes down when the power regulator switch is pressed DOWN.

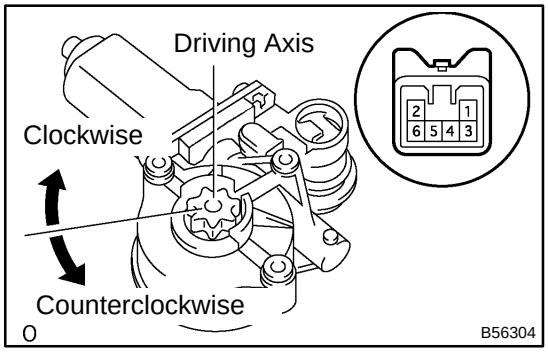

4. INSPECT POWER WINDOW REGULATOR MOTOR ASSY RH

(a) Inspect operation of the front RH power window regulator motor assembly.

(1) When adding battery voltage to each connector terminal, check that the motor operates smoothly.

Standard:

Measurement condition	Operational direction
Battery positive − Terminal 5 Battery negative − Terminal 4	Clockwise
Battery positive − Terminal 4 Battery negative − Terminal 5	Counterclockwise

(b) Check operation of the PTC inside the power window regulator motor.

NOTICE:

Work must be performed with the power window regulator and door glass installed to the vehicle.

(1) Set the DC 400 A probe to terminal 4 or 5 of the wire harness.

NOTICE:

Match the arrow mark of the probe with the current direction.

(2) Set the door glass at the fully closed position.

(3) When approximately 60 seconds have passed after fully closing the door glass, check how long the current takes to change from approximately 16 − 34 A to less than 1 A when pulling the power regulator switch UP furthermore (at initial time).

Standard: Approximately 4 − 90 seconds

(4) When approximately 60 seconds have passed after the cut−off check, check that the door glass goes down when the power regulator switch is pressed DOWN.

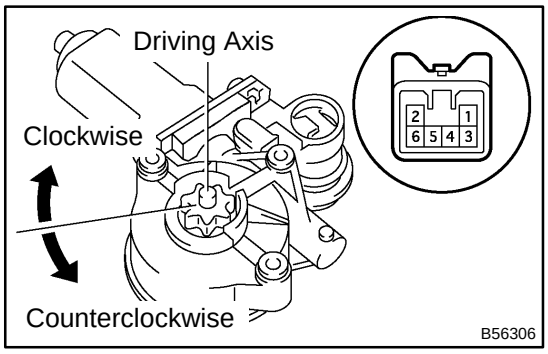

5. INSPECT POWER WINDOW REGULATOR MOTOR ASSY LH

(a) Inspect operation of the rear LH power window regulator motor assembly.

(1) When adding battery voltage to each connector terminal, check that the motor operates smoothly.

Standard:

Measurement condition	Operational direction
Battery positive − Terminal 5 Battery negative − Terminal 4	Clockwise
Battery positive − Terminal 4 Battery negative − Terminal 5	Counterclockwise

(b) Check operation of the PTC inside the power window regulator motor.

NOTICE:

Work must be performed with the power window regulator and door glass installed to the vehicle.

(1) Set the DC 400 A probe terminal 4 or 5 of the wire harness.

NOTICE:

Match the arrow mark of the probe with the current direction.

(2) Set the door glass at the fully closed position.

(3) When approximately 60 seconds have passed after fully closing the door glass, check how long the current takes to change from approximately 16 − 34 A to less than 1 A when pulling the power regulator switch UP furthermore (at initial time).

Standard: Approximately 4 − 90 seconds

(4) When approximately 60 seconds have passed after the cut−off check, check that the door glass goes down when the power regulator switch is pressed DOWN.

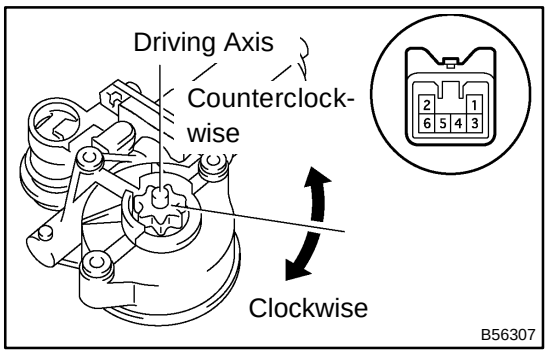

6. INSPECT POWER WINDOW REGULATOR MOTOR ASSY RH

(a) Inspect operation of the rear RH power window regulator motor assembly.

(1) When adding battery voltage to each connector terminal, check that the motor operates smoothly.

Standard:

Measurement condition	Operational direction
Battery positive − Terminal 5 Battery negative − Terminal 4	Clockwise
Battery positive − Terminal 4 Battery negative − Terminal 5	Counterclockwise

(b) Check operation of the PTC inside the power window regulator motor.

NOTICE:

Work must be performed with the power window regulator and door glass installed to the vehicle.

(1) Set the DC 400 A probe to terminal 4 or 5 of the wire harness.

NOTICE:

Match the arrow mark of the probe with the current direction.

(2) Set the door glass at the fully closed position.

(3) When approximately 60 seconds have passed after fully closing the door glass, check how long the current takes to change from approximately 16 − 34 A to less than 1 A when pulling the power regulator switch UP furthermore (at initial time).

Standard: Approximately 4 − 90 seconds

(4) When approximately 60 seconds have passed after the cut−off check, check that the door glass goes down when the power regulator switch is pressed DOWN.

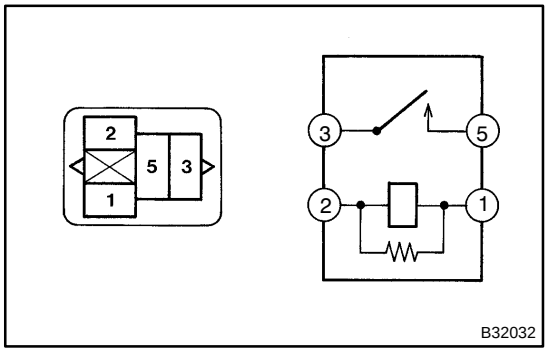

7. INSPECT POWER WINDOW RELAY ASSY

(a) Inspect the power window relay continuity.

Standard:

Terminals No.	Condition	Specified Condition
1 − 2	Constant	Continuity
3 − 5	Constant	No continuity
3 − 5	Apply B + to terminals 1 and 2	Continuity

If the continuity is not as specified, replace the relay.

WINDSHIELD GLASS

COMPONENTS

700AZ−03

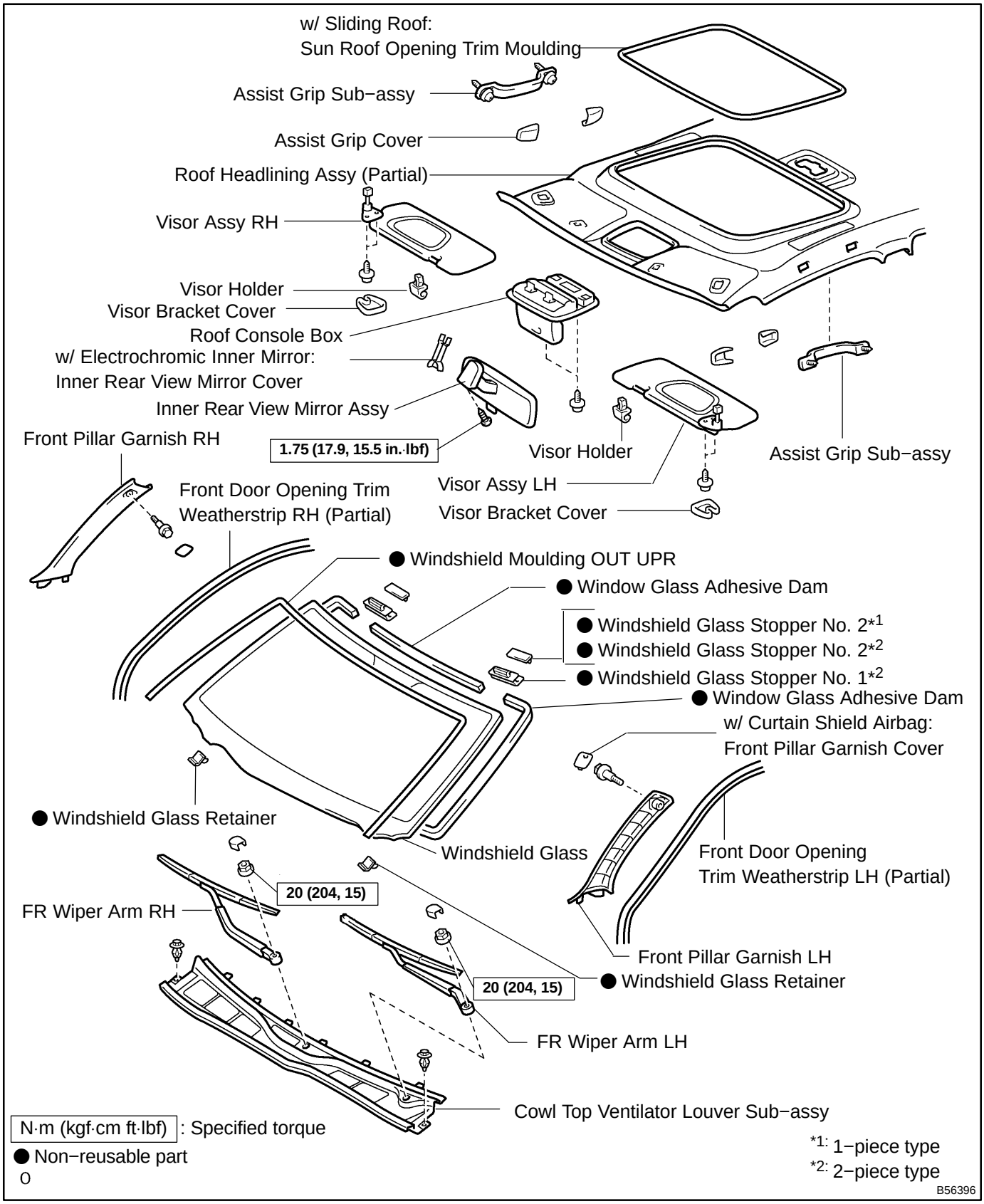

700YB−01

REPLACEMENT

HINT:

- The installation procedures are the removal procedures in reverse order. However, only installation procedures requiring additional information are included.
- A bolt without a torque specification is a standard bolt (See page 03−2).

1. REMOVE FR WIPER ARM RH (See page 66−6)
2. REMOVE FR WIPER ARM LH (See page 66−6)
3. REMOVE COWL TOP VENTILATOR LOUVER SUB−ASSY (See page 66−6)
4. REMOVE FRONT DOOR OPENING TRIM WEATHERSTRIP RH (See page 66−6)
5. REMOVE FRONT DOOR OPENING TRIM WEATHERSTRIP LH (See page 66−6)
6. REMOVE FRONT PILLAR GARNISH RH (w/o CURTAIN SHIELD AIR BAG) (See page 76−22)
7. REMOVE FRONT PILLAR GARNISH LH (w/o CURTAIN SHIELD AIR BAG) (See page 76−22)
8. REMOVE FRONT PILLAR GARNISH RH (w/ CURTAIN SHIELD AIR BAG) (See page 76−22)
9. REMOVE FRONT PILLAR GARNISH LH (w/ CURTAIN SHIELD AIR BAG) (See page 76−22)
10. REMOVE ROOF CONSOLE BOX ASSY (See page 76−22)
11. REMOVE RH VISOR ASSY (See page 76−22)
12. REMOVE LH VISOR ASSY (See page 76−22)
13. REMOVE VISOR HOLDER (See page 76−22)
14. REMOVE ROOF HEADLINING ASSY (See page 76−22)

HINT:

It is not necessary to completely remove the roof headlining. Slightly lower the front section of the roof headlining so that the windshield glass can be removed later in step 17.

15. REMOVE INNER REAR VIEW MIRROR ASSY (See page 70−29)

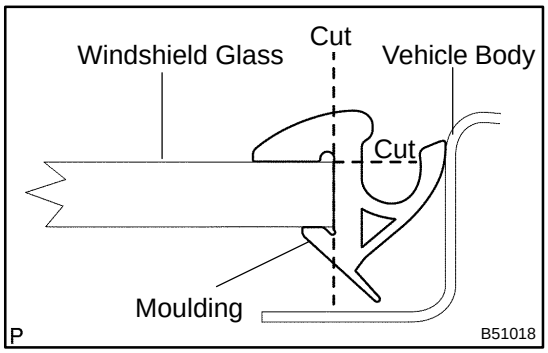

16. REMOVE WINDSHIELD MOULDING OUTER UPPER

(a) Using a knife, cut off the moulding, as shown in the illustration.

NOTICE:

Be careful not to damage the vehicle body with the knife.

(b) Remove the remaining moulding.

HINT:

Make a partial cut in the moulding. Then pull and remove it by hand.

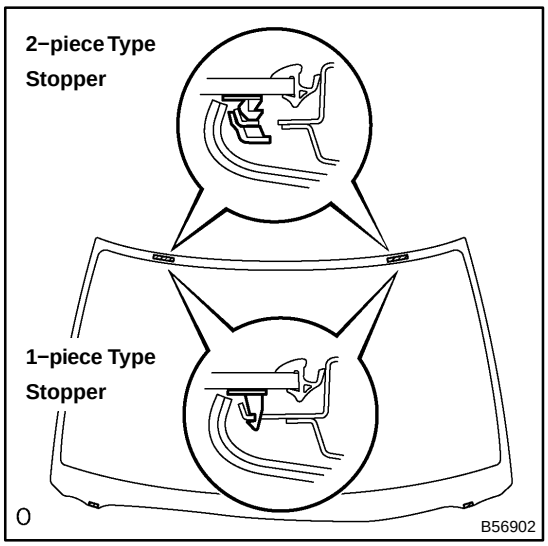

17. REMOVE WINDSHIELD GLASS

HINT:

In some cases, 1−piece type and 2−piece type stoppers are installed in the same vehicle.

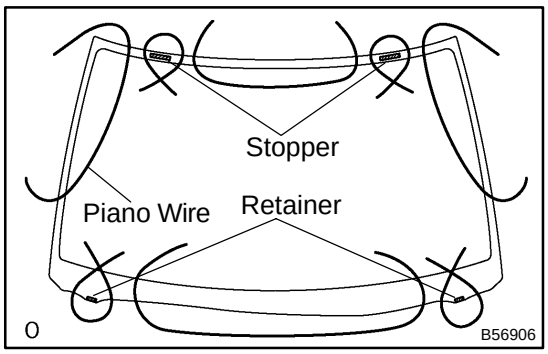

(a) From the interior, insert piano wires between the vehicle body and glass, as shown in the illustration.
(b) Tie objects that can serve as handles (for example, wooden blocks) to all wire ends.

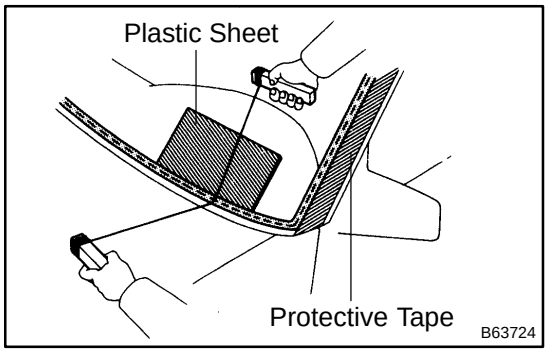

HINT:
Apply protective tape to the outer surface of the vehicle body to prevent its surface from being scratched.

NOTICE:

- **w/ Curtain shield airbag:**
  When working around the curtain shield airbag, be careful not to damage the airbag.
- **When separating the glass from the vehicle, be careful not to damage the vehicle's paint or interior / exterior ornaments.**
- **To prevent the safety pad from being scratched when removing the glass, place a plastic sheet between the piano wire and safety pad.**

(c) Cut through the adhesive by pulling the piano wire around the glass.
(d) Disengage the stoppers.
(e) Using a suction cup, remove the glass.

NOTICE:
Leave as much adhesive on the vehicle body as possible when removing the glass.

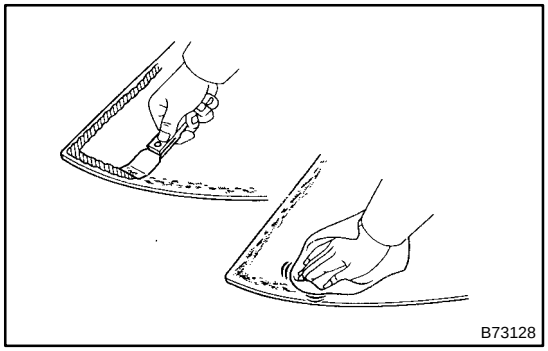

18. CLEAN WINDSHIELD GLASS

(a) Using a scraper, remove the damaged stoppers, dam and adhesive sticking to the glass.
(b) Clean the outer circumference of the glass with white gasoline.

NOTICE:

- **Do not touch the glass after cleaning it.**
- **Even if using new glass, clean the glass with white gasoline.**

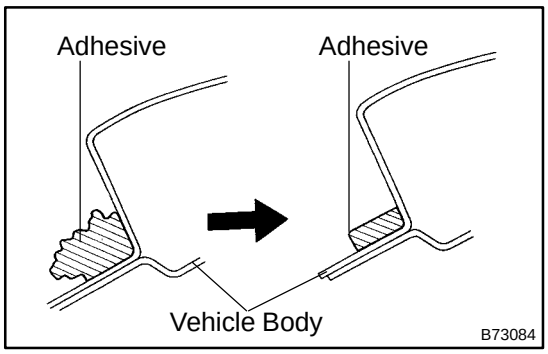

19. CLEAN VEHICLE BODY

(a) Clean and shape the contact surface of the vehicle body.

(1) Using a knife, cut away any rough adhesive on the contact surface of the vehicle body to ensure the appropriate surface shape.

NOTICE:

Be careful not to damage the vehicle body.

HINT:

Leave as much adhesive on the vehicle body as possible.

(2) Clean the contact surface of the vehicle body with a piece of shop rag saturated with cleaner.

HINT:

Even if all the adhesive has been removed, clean the vehicle body.

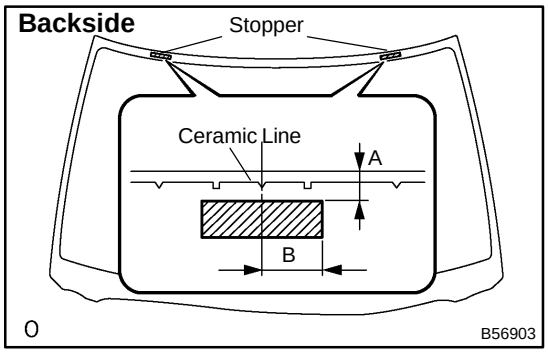

20. INSTALL WINDSHIELD GLASS STOPPER NO.2

(a) Coat the installation part of the stopper with Primer G.

NOTICE:

- **Allow the primer coating to dry for 3 minutes or more.**
- **Throw away any leftover Primer G.**
- **Do not apply too much Primer G.**

(b) Install 2 new stoppers onto the glass, as shown in the illustration.

Specification:

Area	Measurement
A	7.7 mm (0.303 in.)
B	40.0 mm (1.575 in.)

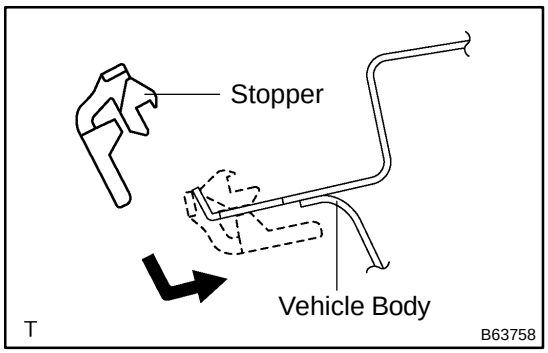

21. INSTALL WINDSHIELD GLASS STOPPER NO.1

(a) Install 2 new stoppers to the vehicle body, as shown in the illustration.

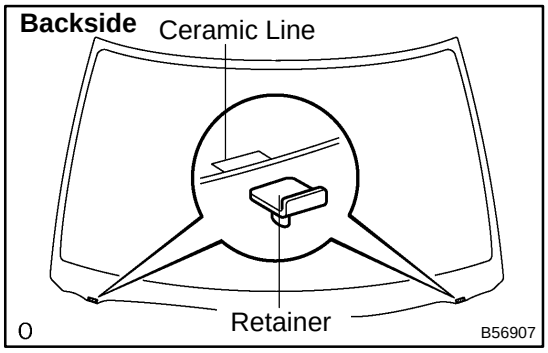

22. INSTALL WINDSHIELD GLASS RETAINER

(a) Install 2 new retainers onto the glass, as shown in the illustration.

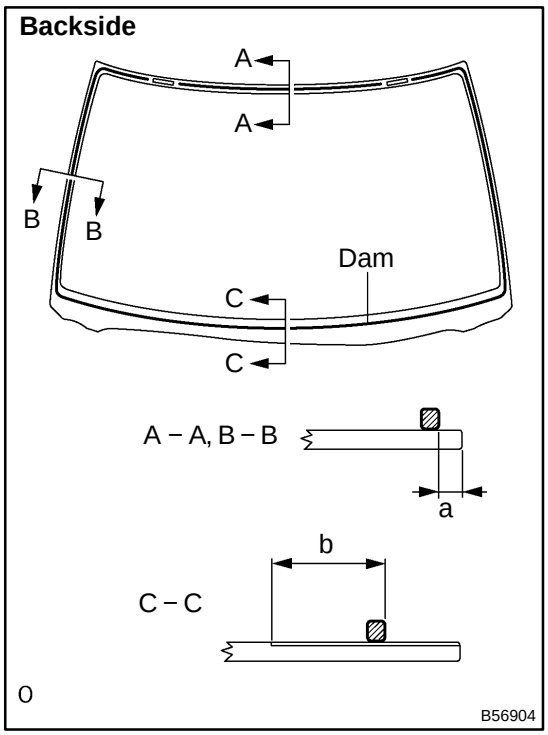

23. INSTALL WINDOW GLASS ADHESIVE DAM

(a) Coat the installation part of the windshield glass adhesive dam with Primer G.

NOTICE:

- **Allow the primer coating to dry for 3 minutes or more.**
- **Throw away any leftover Primer G.**
- **Do not apply too much primer.**

(b) Install a new dam, as shown in the illustration.

Specification:

Area	Measurement
a	7.0 mm (0.276 in.)
b	35.0 mm (1.378 in.)

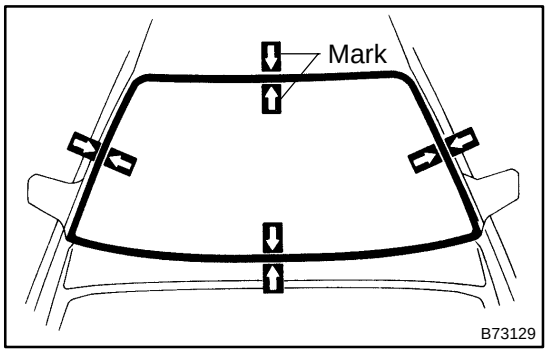

24. INSTALL WINDSHIELD GLASS

(a) Position the glass.

(1) Using a suction cup, place the glass in the correct position.

(2) Check that the whole contact surface of the glass rim is perfectly even.

(3) Place reference marks between the glass and vehicle body.

NOTICE:

Check that the stoppers are attached to the vehicle body correctly.

HINT:

When reusing the glass, check and correct the reference mark's positions.

(4) Using a suction cup, remove the glass.

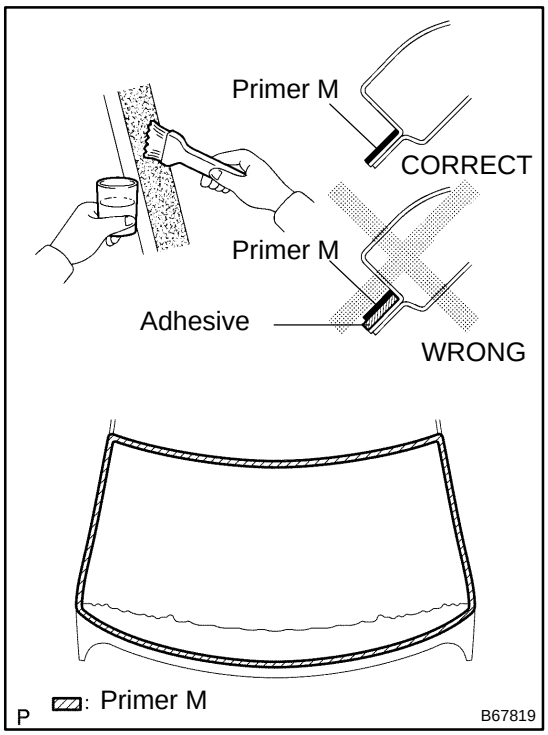

(b) Using a brush, coat the exposed part of the vehicle body on the vehicle side with Primer M.

NOTICE:

- **Allow the primer coating to dry for 3 minutes or more.**
- **Do not coat the adhesive with Primer M.**
- **Throw away any leftover Primer M.**
- **Do not apply too much Primer M.**

(c) Using a brush or sponge, coat the edge of the glass and the contact surface with Primer G.

HINT:

If the area other than that specified is coated by accident, wipe off the primer with a clean shop rag before it dries.

NOTICE:

- **Allow the primer coating to dry for 3 minutes or more.**
- **Throw away any leftover Primer G.**
- **Do not apply too much Primer G.**

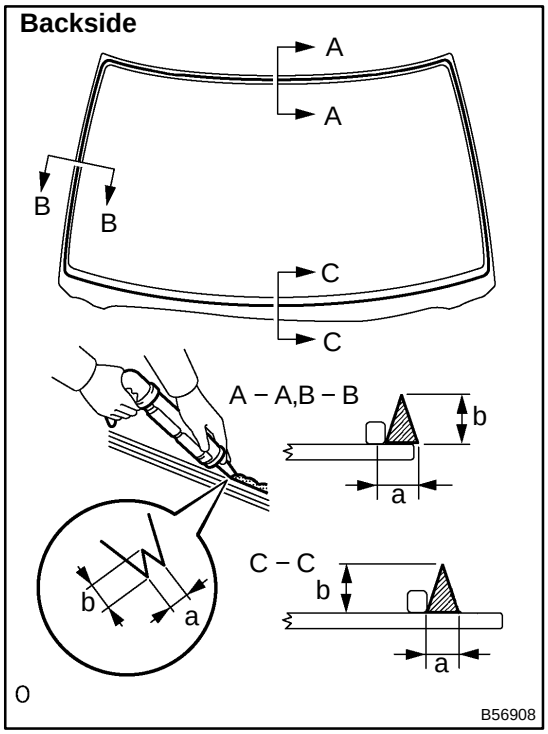

(d) Apply adhesive.

Adhesive: Part No. 08850−00801 or equivalent

(1) Cut off the tip of the cartridge nozzle, as shown in the illustration.

HINT:

After cutting off the tip, use all adhesive within the time described in the table below.

Usage timeframe:

Temperature	Usage Timeframe
35 C (95 F)	15 minutes
20 C (68 F)	1 hour 40 minutes
5 C (41 F)	8 hours

(2) Load the sealer gun with the cartridge.

(3) Coat the glass with adhesive, as shown in the illustration.

Specification:

Area	Measurement
a	8.0 mm (0.315 in.)
b	12.0 mm (0.472 in.)

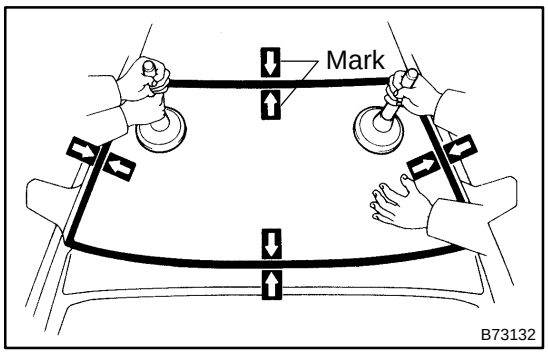

(e) Install the glass.

(1) Using a suction cup, position the glass so that the reference marks are aligned. Press it in gently along the rim.

NOTICE:

- **Allow the primer coating to dry for 3 minutes or more.**
- **Check that the stoppers are attached to the vehicle body correctly.**
- **Check that the vehicle body and glass have a small gap between them.**

(2) Lightly press the front surface of the glass to ensure that the glass is securely fit to the vehicle body.

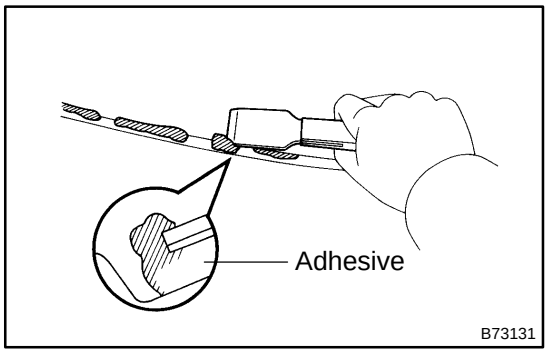

(3) Using a scraper, remove any excess or protruding adhesive.

HINT:

Apply adhesive on the glass rim.

NOTICE:

Do not drive the vehicle for the amount of time described in the table below.

Minimum time:

Temperature	Minimum time prior to driving vehicle
35 C (95 F)	1 hour 30 minutes
20 C (68 F)	5 hours
5 C (41 F)	24 hours

25. INSTALL WINDSHIELD MOULDING OUTER UPPER

(a) Using a brush or sponge, coat the edge of the glass and the contact surface with Primer G.

NOTICE:

- **Allow the primer coating to dry for 3 minutes or more.**
- **Throw away any leftover Primer G.**
- **Do not apply too much Primer G.**

(b) Install the moulding.

26. CHECK FOR LEAKS AND REPAIR

(a) Conduct a leak test after the adhesive has completely hardened.

(b) Seal any leaks with auto glass sealer.

BACK WINDOW GLASS

COMPONENTS

700B1−03

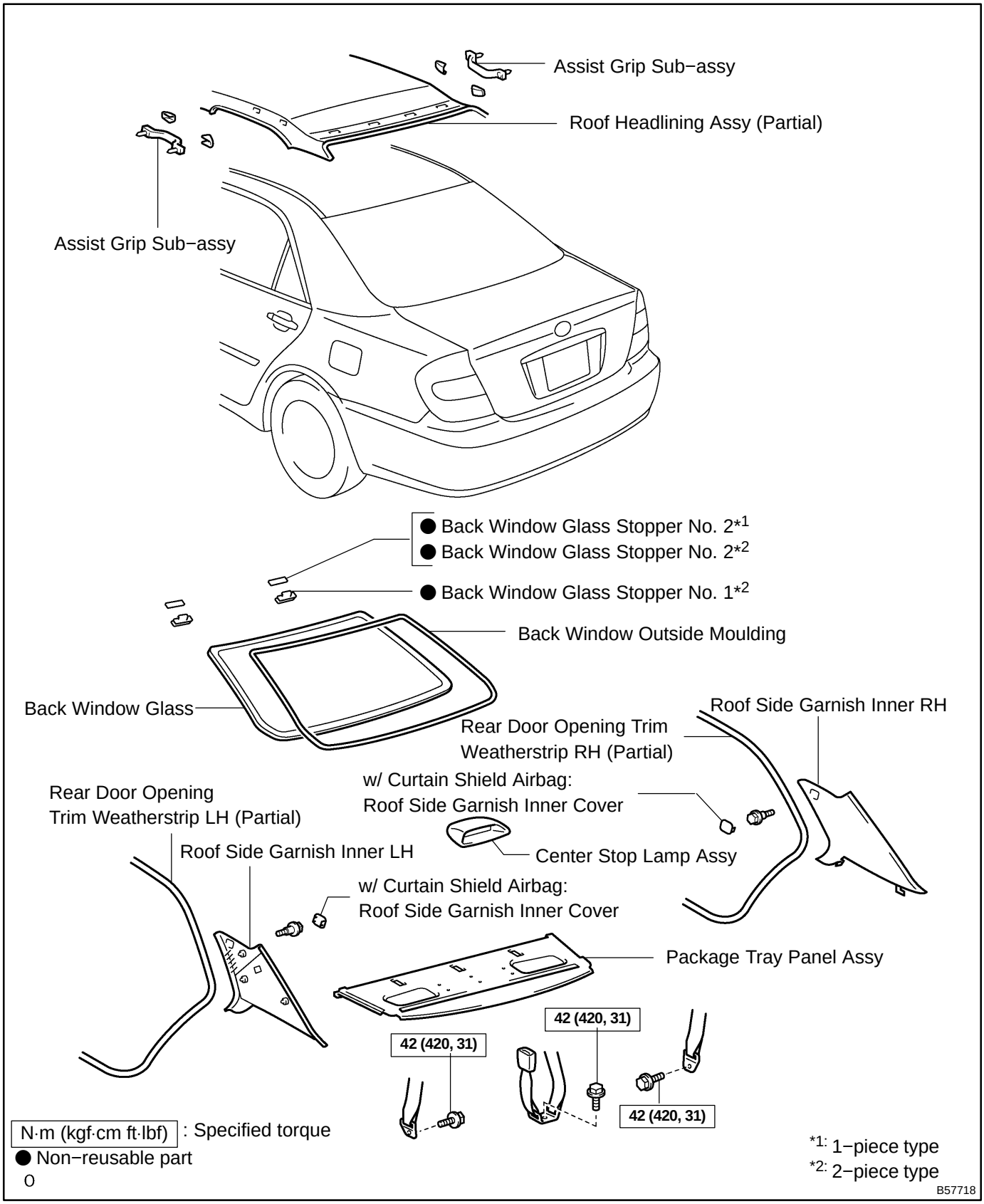

700YC−02

REPLACEMENT

HINT:

- The installation procedures are the removal procedures in reverse order. However, only installation procedures requiring additional information are included.
- A bolt without torque specification is a standard bolt (see page 03−2).

1. REMOVE REAR SEAT CUSHION ASSY (See page 72−32)
2. REMOVE REAR SEATBACK ASSY (See page 72−32)
3. REMOVE REAR DOOR OPENING TRIM WEATHERSTRIP RH
4. REMOVE REAR DOOR OPENING TRIM WEATHERSTRIP LH
5. REMOVE ROOF SIDE GARNISH INNER RH (w/o CURTAIN SHIELD AIR BAG) (See page 76−22)
6. REMOVE ROOF SIDE GARNISH INNER LH (w/o CURTAIN SHIELD AIR BAG) (See page 76−22)
7. REMOVE ROOF SIDE GARNISH INNER RH (w/ CURTAIN SHIELD AIR BAG) (See page 76−22)
8. REMOVE ROOF SIDE GARNISH INNER LH (w/ CURTAIN SHIELD AIR BAG) (See page 76−22)
9. REMOVE ROOF HEADLINING ASSY (See page 76−22)

HINT:

It is not necessary to completely remove the roof headlining. Slightly lower the rear section of the roof headlining so that the back window glass can be removed later in step 13.

10. REMOVE CENTER STOP LAMP ASSY (See page 65−22)
11. REMOVE PACKAGE TRAY TRIM PANEL ASSY (See pages 61−13 and 61−16)

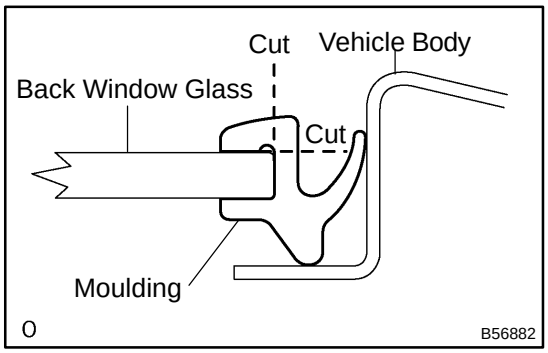

12. REMOVE BACK WINDOW MOULDING OUTSIDE

(a) Using a knife, cut off the moulding, as shown in the illustration.

NOTICE:

Be careful not to damage the vehicle body with the knife.

(b) Remove the remaining moulding.

HINT:

Make a partial cut in the moulding. Then pull and remove it by hand.

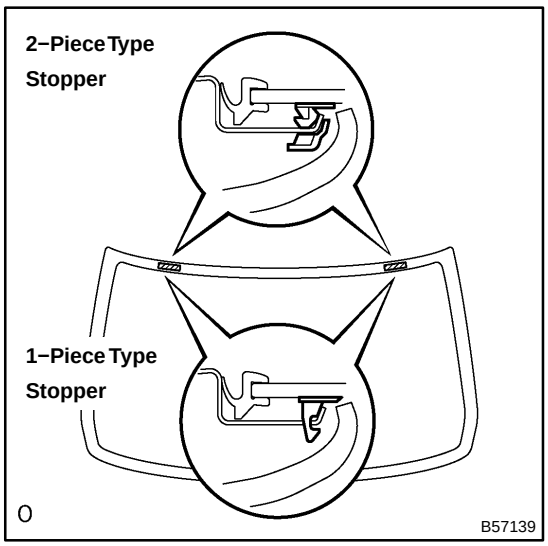

13. REMOVE BACK WINDOW GLASS

HINT:

In some cases, 1−piece type and 2−piece type stoppers are installed in the same vehicle.

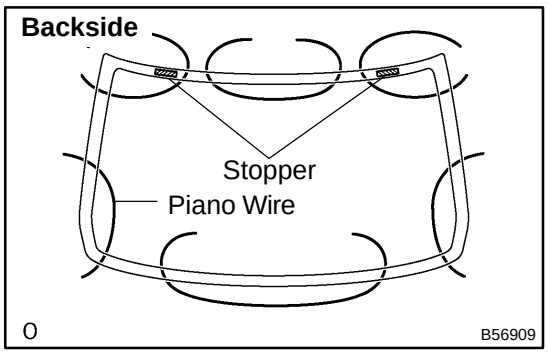

(a) From the interior, insert piano wires between the vehicle body and glass, as shown in the illustration.
(b) Tie objects that can serve as handles (for example, wooden blocks) to all wire ends.

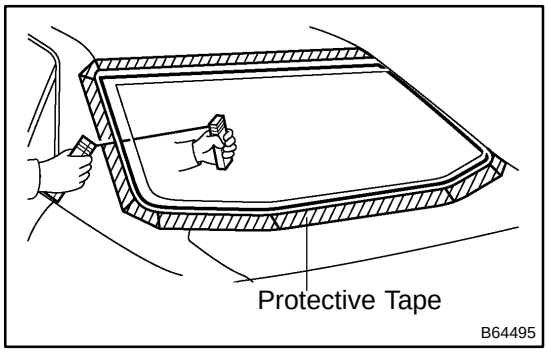

HINT:
Apply protective tape to the outer surface of the vehicle body to prevent its surface from being scratched.

NOTICE:

When separating the glass from the vehicle, be careful not to damage the vehicle's paint or interior / exterior ornaments.

(c) Cut through the adhesive by pulling the piano wire around the glass.
(d) Disengage the stoppers.
(e) Using a suction cup, remove the glass.

NOTICE:

Leave as much adhesive on the vehicle body as possible when removing the glass.

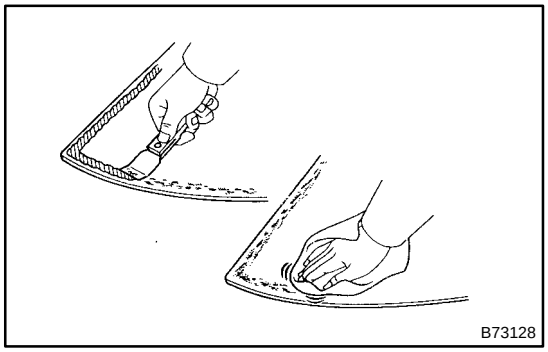

14. CLEAN BACK WINDOW GLASS

(a) Using a scraper, remove the damaged stoppers and adhesive sticking to the glass.
(b) Clean the outer circumference of the glass with white gasoline.

NOTICE:

- **Do not touch the glass surface after cleaning it.**
- **Even if using new glass, clean the glass with white gasoline.**

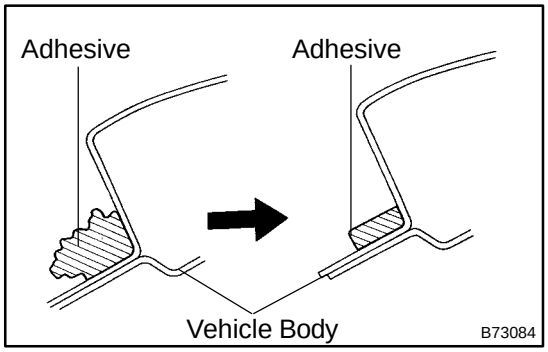

15. CLEAN VEHICLE BODY

(a) Clean and shape the contact surface of the vehicle body.
    (1) Using a knife, cut away any rough adhesive on the contact surface of the vehicle body to ensure the appropriate surface shape.

NOTICE:

Be careful not to damage the vehicle body.

HINT:
Leave as much adhesive on the vehicle body as possible.

    (2) Clean the contact surface of the vehicle body with a piece of shop rag saturated with cleaner.

HINT:
Even if all the adhesive has been removed, clean the vehicle body.

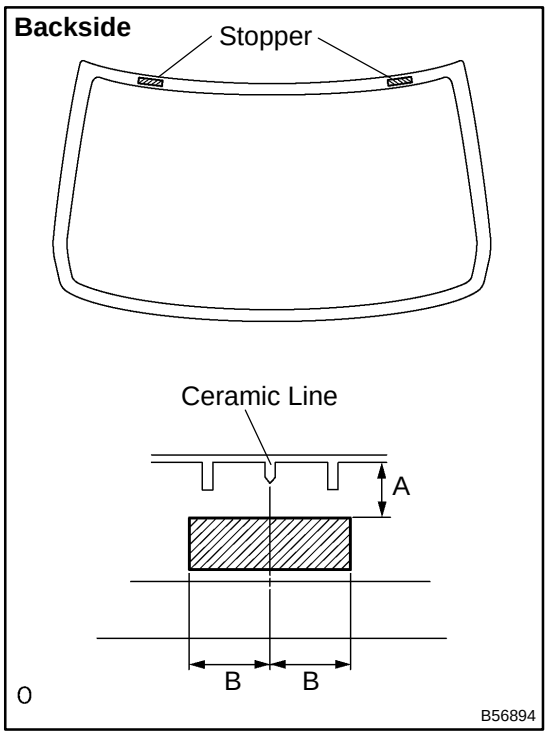

16. INSTALL BACK WINDW GLASS STOPPER NO.2

(a) Coat the installation part of the stopper with Primer G.

NOTICE:

- **Allow the primer coating to dry for 3 minutes or more.**
- **Throw away any leftover Primer G,**
- **Do not apply too much Primer G.**

(b) Install 2 new stoppers onto the glass, as shown in the illustration.

Specification:

Area	Measurement
A	11.2 mm (0.441 in.)
B	40.0 mm (1.575 in.)

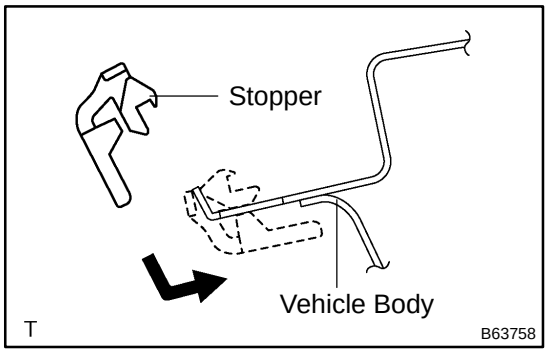

17. INSTALL BACK WINDOW GLASS STOPPER NO.1

(a) Install 2 new stoppers to the vehicle body, as shown in the illustration.

18. INSTALL BACK WINDOW MOULDING OUTSIDE

(a) Using a brush or sponge, coat the edge of the glass and the contact surface with Primer G.

NOTICE:

- **Allow the primer coating to dry for 3 minutes or more.**
- **Throw away any leftover Primer G.**
- **Do not apply too much Primer G.**

(b) Install the moulding.

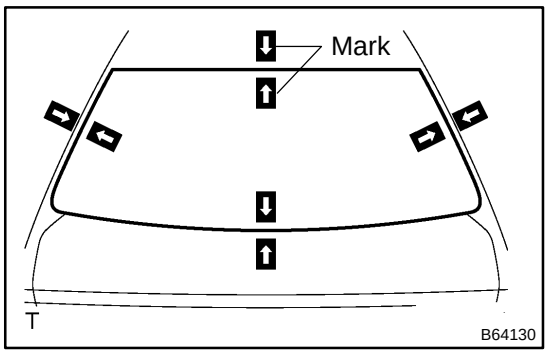

19. INSTALL BACK WINDOW GLASS

(a) Position the glass.

(1) Using a suction cup, place the glass in the correct position.

(2) Check that the whole contact surface of the glass rim in perfectly even.

(3) Place reference marks between the glass and vehicle body.

NOTICE:

Check that the stoppers are attached to the vehicle body correctly.

HINT:

When reusing the glass, check and correct the reference mark's positions.

(4) Using a suction cup, remove the glass.

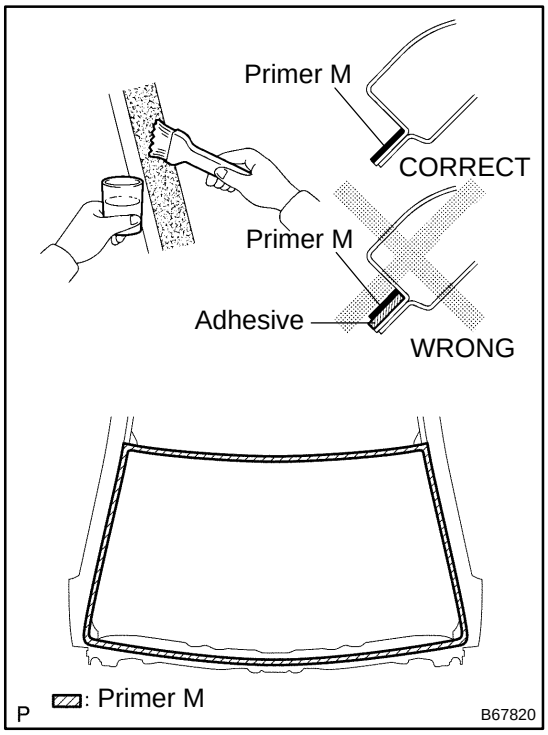

(b) Using a brush, coat the exposed part of the vehicle body with Primer M.

NOTICE:

- **Allow the primer coating to dry for 3 minutes or more.**
- **Do not coat the adhesive with Primer M.**
- **Throw away any leftover Primer M.**
- **Do not apply too much Primer M.**

(c) Using a brush or sponge, coat the edge of the glass and the contact surface with Primer G.

HINT:

If the area other than that specified is coated by accident, wipe off the primer with a clean shop rag before it dries.

NOTICE:

- **Allow the primer coating to dry for 3 minutes or more.**
- **Throw away any leftover Primer G.**
- **Do not apply too much Primer G.**

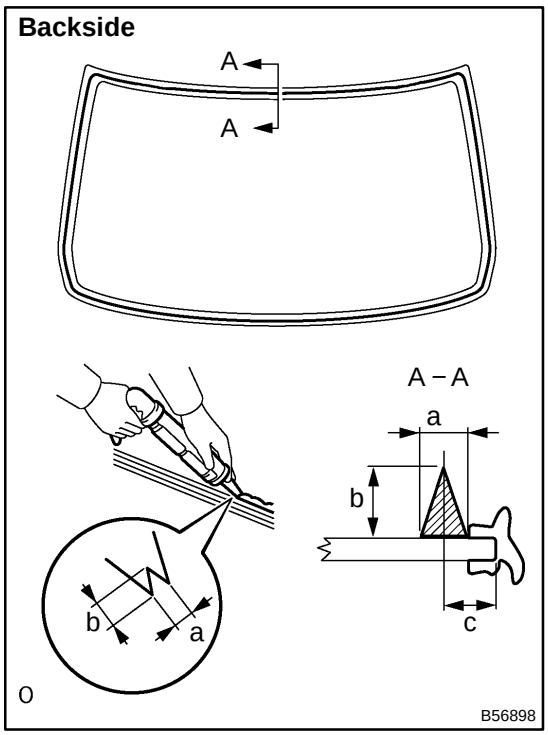

(d) Apply adhesive.

Adhesive: Part No. 08850−00801 or equivalent

(1) Cut off the tip of the cartridge nozzle, as shown in the illustration.

HINT:

After cutting off the tip, use all adhesive within the time described in the table below.

Usage timeframe:

Temperature	Usage Timeframe
35 C (95 F)	15 minutes
20 C (68 F)	1 hour 40 minutes
5 C (41 F)	8 hours

(2) Load the sealer gun with the cartridge.

(3) Coat the glass with adhesive, as shown in the illustration.

Specification:

Area	Measurement
a	8.0 mm (0.315 in.)
b	12.0 mm (0.472 in.)
c	6.5 mm (0.256 in.)

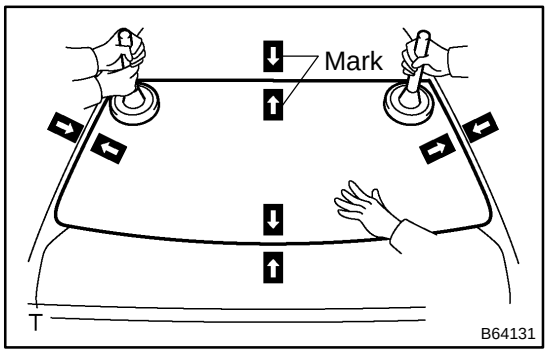

(e) Install the glass.

(1) Using a suction cup, position the glass so that the reference marks are aligned. Press it in gently along the rim.

NOTICE:

- **Allow the primer coating to dry for 3 minutes or more.**
- **Check that the stoppers are attached to the vehicle body correctly.**
- **Check that the vehicle body and glass have a small gap between them.**

(2) Lightly press the front surface of the glass to ensure that the glass is securely fit to the vehicle body.

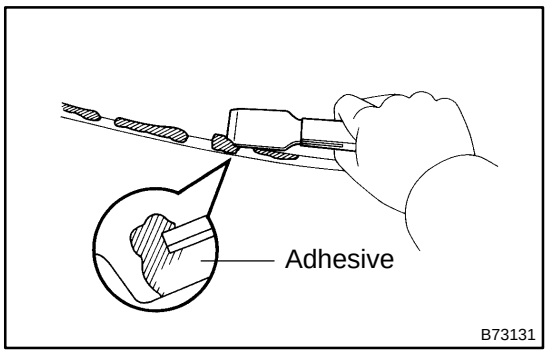

(3) Using a scraper, remove any excess or protruding adhesive.

HINT:

Apply adhesive on the glass rim.

NOTICE:

Do not drive the vehicle for the amount of time described in the table below.

Minimum time:

Temperature	Minimum time prior to driving vehicle
35 C (95 F)	1 hour 30 minutes
20 C (68 F)	5 hours
5 C (41 F)	24 hours

20. CHECK FOR LEAKS AND REPAIR

(a) Conduct a leak test after the adhesive has completely hardened.

(b) Seal any leaks with auto glass sealer.

WINDOW DEFOGGER SYSTEM

PROBLEM SYMPTOMS TABLE

700BB−03

Symptom	Suspected Area	See page
Rear window defogger does not operate (Indicator lamp on)	1. DEF fuse (Instrument panel J/B) 2. GAUGE 2 fuse (Instrument panel J/B) 3. DEF relay (Instrument panel J/B) 4. Rear window defogger wire 5. Wire harness 6. Body ECU (2AZ−FE) 7. Body ECU (1MZ−FE)	68−1 68−1 70−22 − − − −
Rear window defogger does not operate (Indicator lamp off)	1. HTR fuse (Instrument panel J/B) 2. Defogger switch (Heater control housing) 3. Wire harness 4. Heater control base	68−1 05−1370 − 05−1370

700BA−02

LOCATION

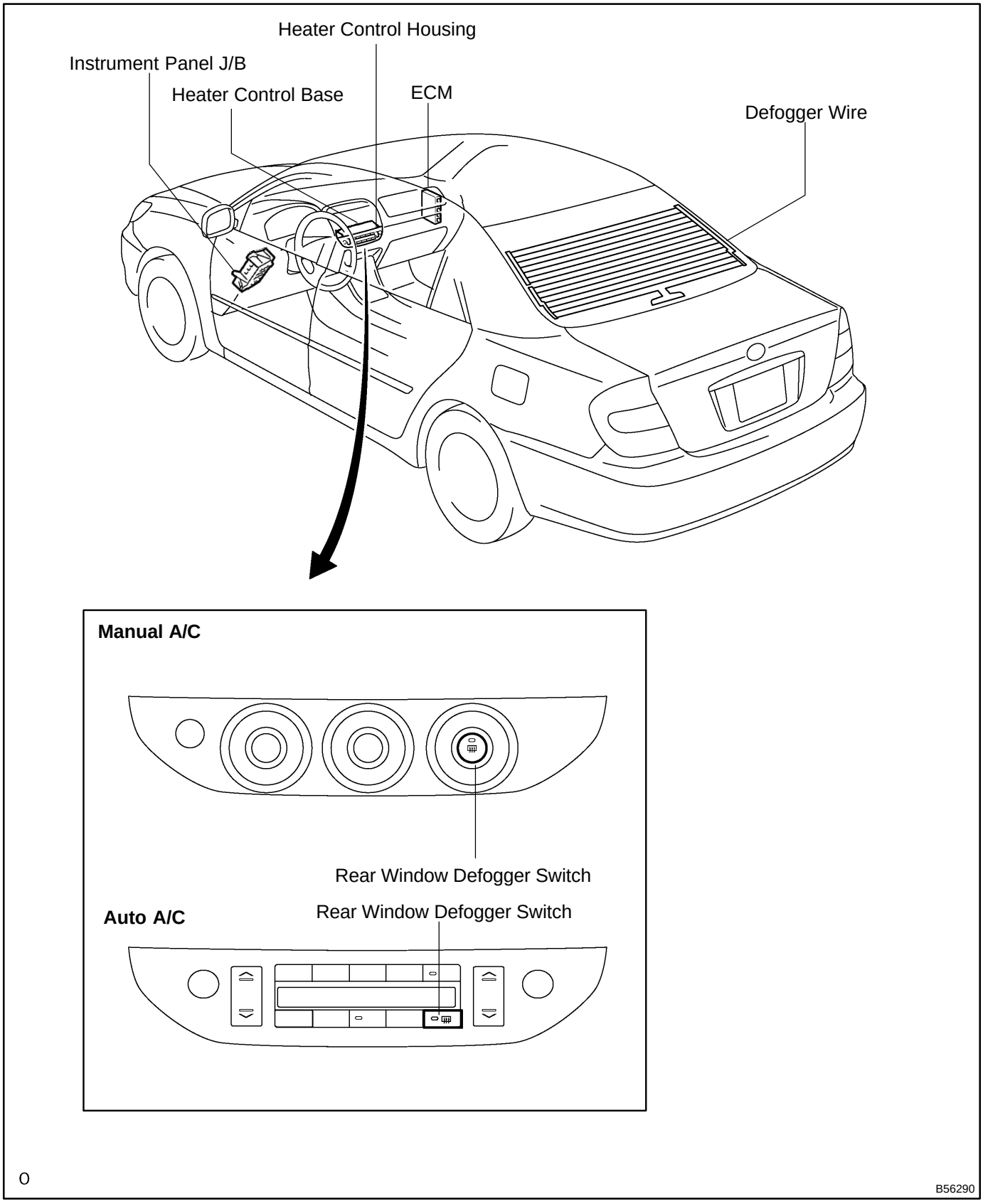

B56290

700BC−02

INSPECTION

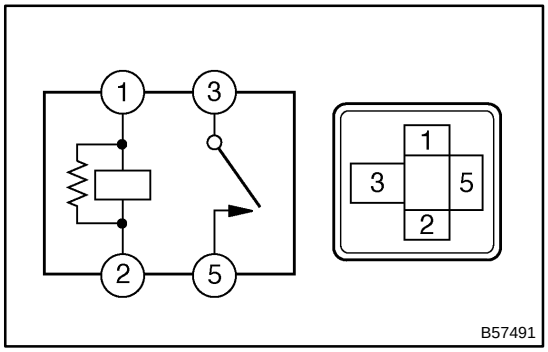

1. INSPECT DEFOGGER RELAY

(a) Inspect the defogger relay (marking: DEF) continuity.

Standard:

Terminals No.	Condition	Specified condition
1 ⇔ 2	Constant	Continuity
3 ⇔ 5	Constant	No continuity
3 ⇔ 5	Apply B+ between terminals 1 and 2	Continuity

If the continuity is not as specified, replace the relay.

POWER MIRROR CONTROL SYSTEM

PROBLEM SYMPTOMS TABLE

700H5−02

Symptom	Suspected Area	See page
Mirror does not operate	1. ECU−ACC fuse (Instrument panel J/B)	68−1
	2. Mirror switch	70−25
	3. Mirror motor	70−25
	4. Wire harness	−
Mirror operates abnormally	1. Mirror switch	70−25
	2. Mirror motor	70−25
	3. Wire harness	−

700BD−02

LOCATION

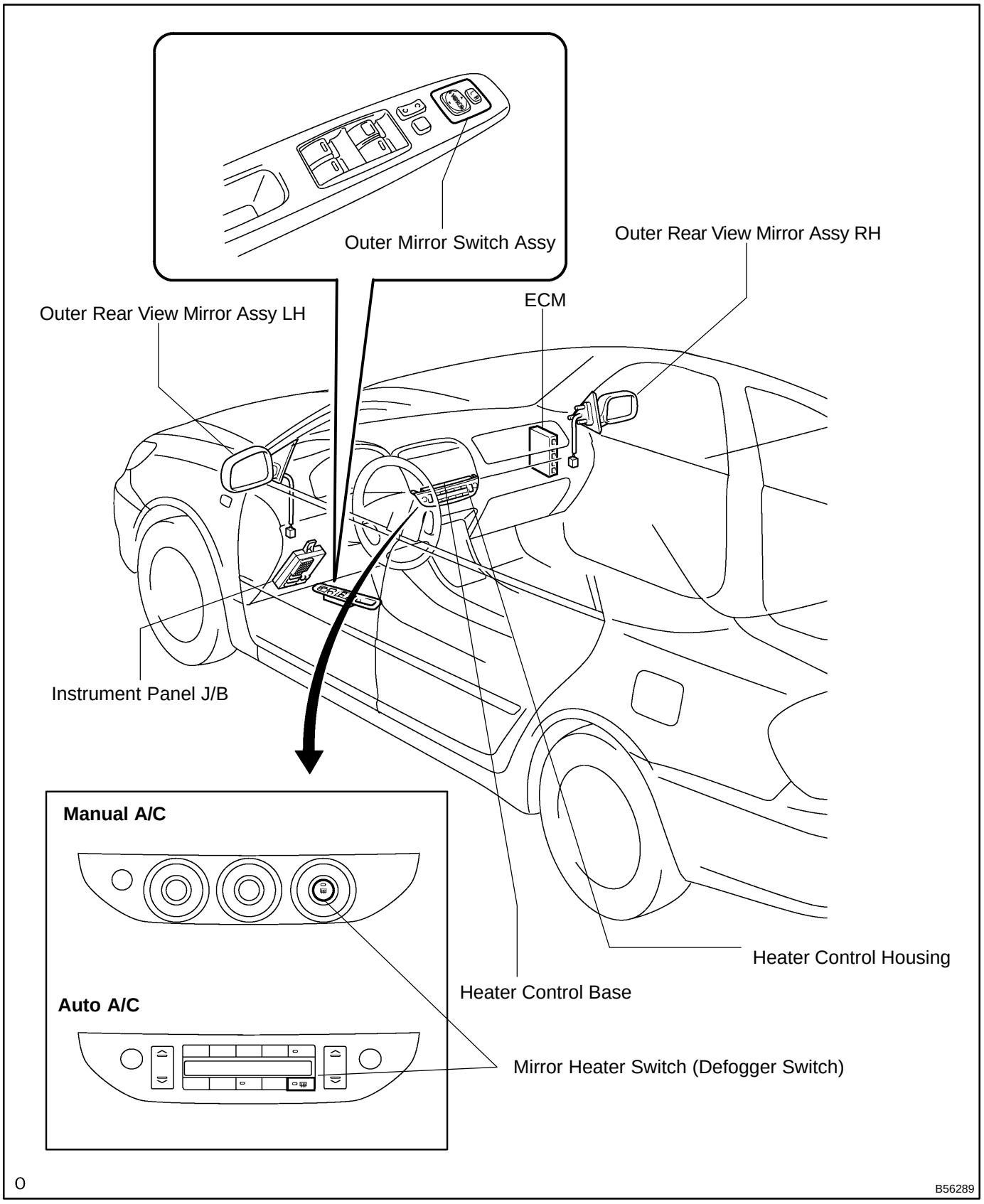

B56289

INSPECTION

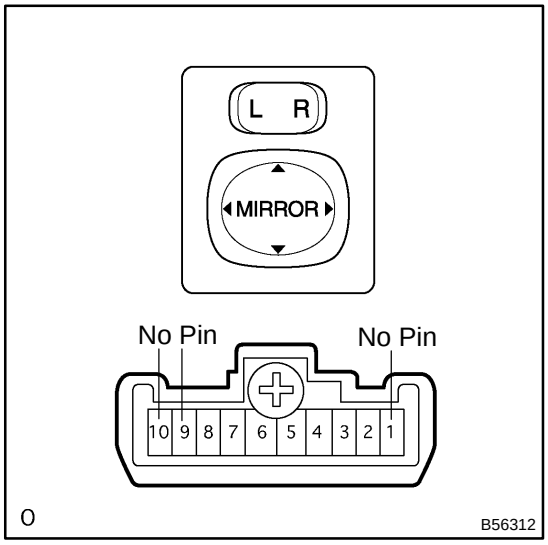

1. INSPECT OUTER MIRROR SWITCH ASSY

(a) Inspect the mirror switch continuity.

(1) Left side for left/right adjustment switch:
Inspect the left side mirror switch continuity.

Standard:

Terminal No.	Switch position	Specified condition
−	OFF	No continuity
4 − 8 6 − 7	UP	Continuity
4 − 7 6 − 8	DOWN	Continuity
5 − 8 6 − 7	LEFT	Continuity
5 − 7 6 − 8	RIGHT	Continuity

If the continuity is not as specified, replace the switch.

(2) Right side for left/right adjustment switch:
Inspect the right side mirror switch continuity.

Standard:

Terminal No.	Switch position	Specified condition
−	OFF	No continuity
3 − 8 6 − 7	UP	Continuity
3 − 7 6 − 8	DOWN	Continuity
2 − 8 6 − 7	LEFT	Continuity
2 − 7 6 − 8	RIGHT	Continuity

If the continuity is not as specified, replace the switch.

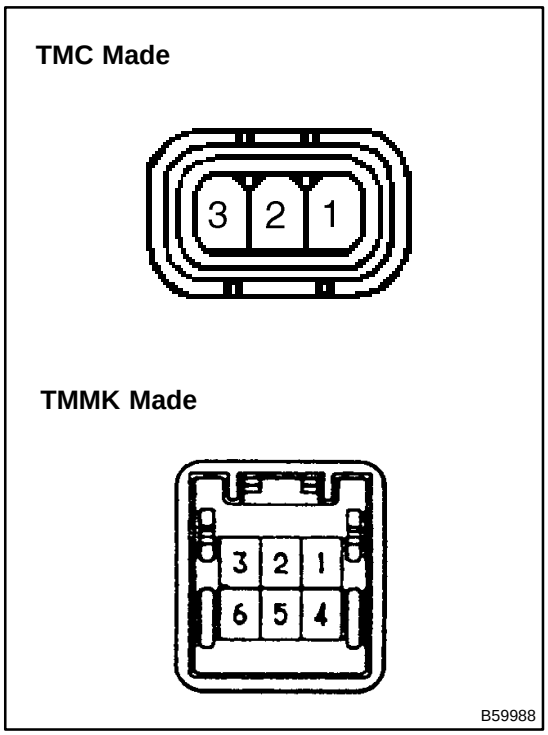

2. INSPECT OUTER REAR VIEW MIRROR ASSY LH (W/O OUTER MIRROR HEATER)

(a) Inspect the mirror motor operation.

Standard (TMC Made):

Battery connection	Mirror position
Positive (+) − 1 Negative (−) − 2	Turn upward
Positive (+) − 2 Negative (−) − 1	Turn downward
Positive (+) − 3 Negative (−) − 2	Turn left
Positive (+) − 2 Negative (−) − 3	Turn right

Standard (TMMK Made):

Battery connection	Mirror position
Positive (+) − 6 Negative (−) − 2	Turn upward
Positive (+) − 2 Negative (−) − 6	Turn downward
Positive (+) − 3 Negative (−) − 2	Turn left
Positive (+) − 2 Negative (−) − 3	Turn right

If the continuity is not as specified, replace the outer rear view mirror assy LH.

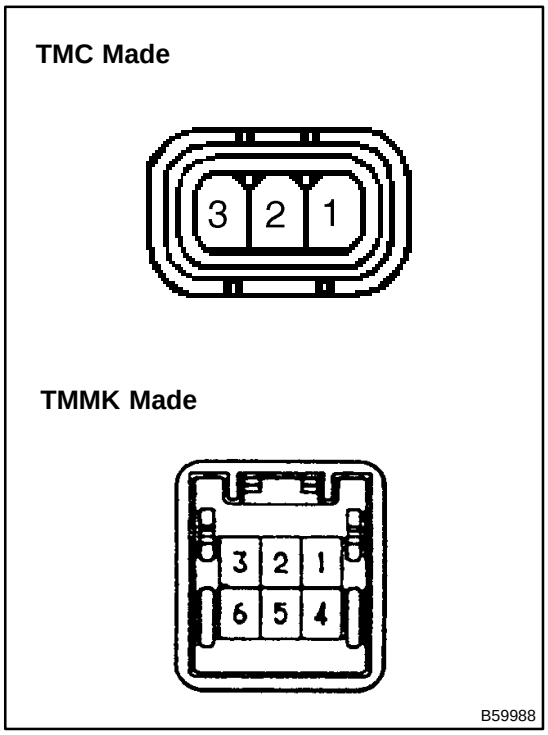

3. INSPECT OUTER REAR VIEW MIRROR ASSY RH (W/O OUTER MIRROR HEATER)

(a) Inspect the mirror motor operation.

Standard (TMC Made):

Battery connection	Mirror position
Positive (+) − 1 Negative (−) − 2	Turn upward
Positive (+) − 2 Negative (−) − 1	Turn downward
Positive (+) − 3 Negative (−) − 2	Turn left
Positive (+) − 2 Negative (−) − 3	Turn right

Standard (TMMK Made):

Battery connection	Mirror position
Positive (+) − 6 Negative (−) − 2	Turn upward
Positive (+) − 2 Negative (−) − 6	Turn downward
Positive (+) − 3 Negative (−) − 2	Turn left
Positive (+) − 2 Negative (−) − 3	Turn right

If the continuity is not as specified, replace the outer rear view mirror assy RH.

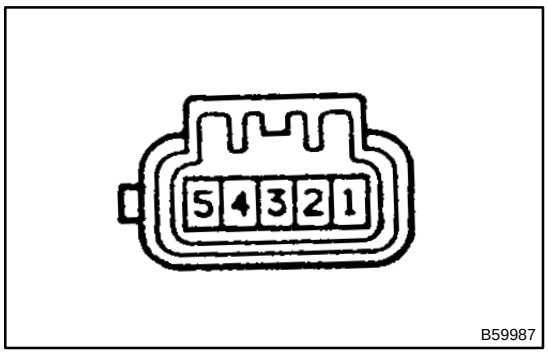

4. INSPECT OUTER REAR VIEW MIRROR ASSY LH (W/ OUTER MIRROR HEATER, TMC MADE)

(a) Inspect the mirror heater operation.

Standard:

Battery connection	Mirror position
Positive (+) − 2 Negative (−) − 3	Turn upward
Positive (+) − 3 Negative (−) − 2	Turn downward
Positive (+) − 4 Negative (−) − 3	Turn left
Positive (+) − 3 Negative (−) − 4	Turn right

If the continuity is not as specified, replace the outer rear view mirror assy LH.

(1) Check the resistance between terminals 1 and 5 of the connector.

Resistance: 4.0 − 5.4 Ω

(2) Check that the mirror is heated up when connecting the battery positive (+) to terminal 4 and the battery negative (−) to terminal 5 of the connector.

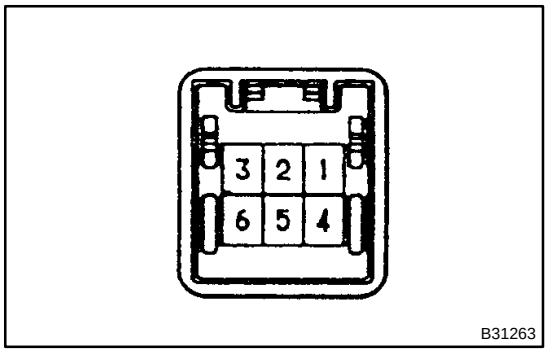

5. INSPECT OUTER REAR VIEW MIRROR ASSY LH (W/ OUTER MIRROR HEATER, TMMK MADE)

(a) Inspect the mirror motor operation.

Standard:

Battery connection	Mirror position
Positive (+) − 6 Negative (−) − 2	Turn upward
Positive (+) − 2 Negative (−) − 6	Turn downward
Positive (+) − 3 Negative (−) − 2	Turn left
Positive (+) − 2 Negative (−) − 3	Turn right

If the continuity is not as specified, replace the outer rear view mirror assy LH.

(b) Inspect the mirror heater operation.

(1) Check the resistance between terminals 1 and 4 of the connector.

Resistance: 4.0 − 5.4 Ω

(2) Check that the mirror is heated up when connecting the battery positive (+) to terminal 4 and the battery negative (−) to terminal 5 of the connector.

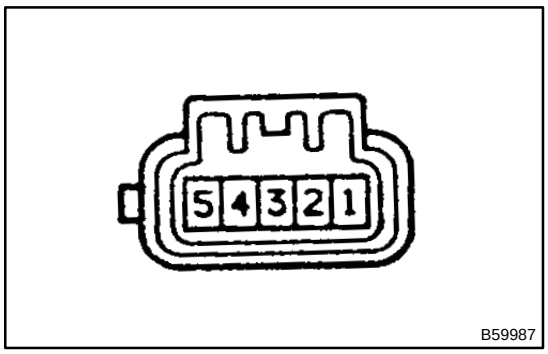

6. INSPECT OUTER REAR VIEW MIRROR ASSY RH (W/ OUTER MIRROR HEATER, TMC MADE)

(a) Inspect the mirror motor operation.

Standard:

Battery connection	Mirror position
Positive (+) − 2 Negative (−) − 3	Turn upward
Positive (+) − 3 Negative (−) − 2	Turn downward
Positive (+) − 4 Negative (−) − 3	Turn left
Positive (+) − 3 Negative (−) − 4	Turn right

If the continuity is not as specified, replace the outer rear view mirror assy RH.

(b) Check the mirror heater operation.

(1) Check the resistance between terminals 1 and 5 of the connector.

Resistance: 4.0 − 5.4 Ω

(2) Check that the mirror is heated up when connecting the battery positive (+) to terminal 4 and the battery negative (−) to terminal 5 of the connector.

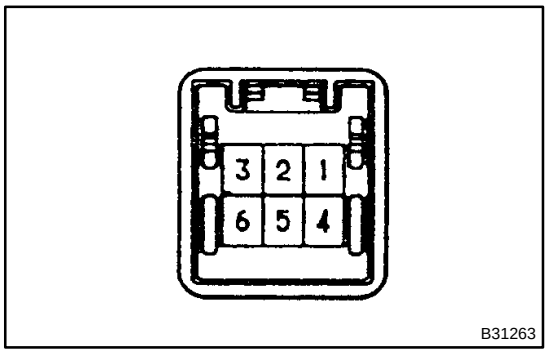

7. INSPECT OUTER REAR VIEW MIRROR ASSY RH (W/ OUTER MIRROR HEATER, TMMK MADE)

(a) Inspect the mirror motor operation.

Standard:

Battery connection	Mirror position
Positive (+) − 6 Negative (−) − 2	Turn upward
Positive (+) − 2 Negative (−) − 6	Turn downward
Positive (+) − 3 Negative (−) − 2	Turn left
Positive (+) − 2 Negative (−) − 3	Turn right

If the continuity is not as specified, replace the outer rear view mirror assy RH.

(b) Check the mirror heater operation.

(1) Check the resistance between terminals 1 and 4 of the connector.

Resistance: 4.0 − 5.4 Ω

(2) Check that the mirror is heated up when connecting the battery positive (+) to terminal 4 and the battery negative (−) to terminal 5 of the connector.

INNER REAR VIEW MIRROR ASSY

700LA−01

REPLACEMENT

HINT:

The installation is in the reverse order of the removal.

1. REMOVE INNER REAR VIEW MIRROR ASSY

(a) Remove the screw.

(b) w/ Erector chromic inner mirror:
Remove the inner rear view mirror cover.

(c) w/ Erector chromic inner mirror:
Disconnect the connector.

(d) Remove the rear view inner mirror assembly.

700B5−02

PRE−CHECK

1. SELECTING COMPASS DISPLAY MODE

(a) The comp switch allows you to select a Display or Non−display mode of the compass.

2. SETTING ZONE

(a) Deviation between the ”magnetic north” and ”actual north” differs depending on the location. Therefore, adjustment of the magnetism is required. Since the magnetic condition differs depending on the area where the vehicle is used, it is necessary for each user to set the zone. (Refer to ”Compass Zone Map”). The zone setting can be changed using the comp switch of the inner mirror.

3. PERFORMING CALIBRATION

(a) Since each vehicle has its own magnetic field, calibration should be performed for each vehicle. This compass function is used when storing the record of the magnetic field of the vehicle.

4. WHEN COMPASS MAGNETIZED:

(a) A compass could be magnetized during shipping by vessels or freight cars. Before delivery, therefore, make sure to perform calibration and ensure that calibration is done properly. If it cannot be done (cannot be complete in spite of driving around several times), it may be caused by magnetization. Demagnetize the vehicle using a demagnetizer and perform calibration again.

5. SETTING COMPASS

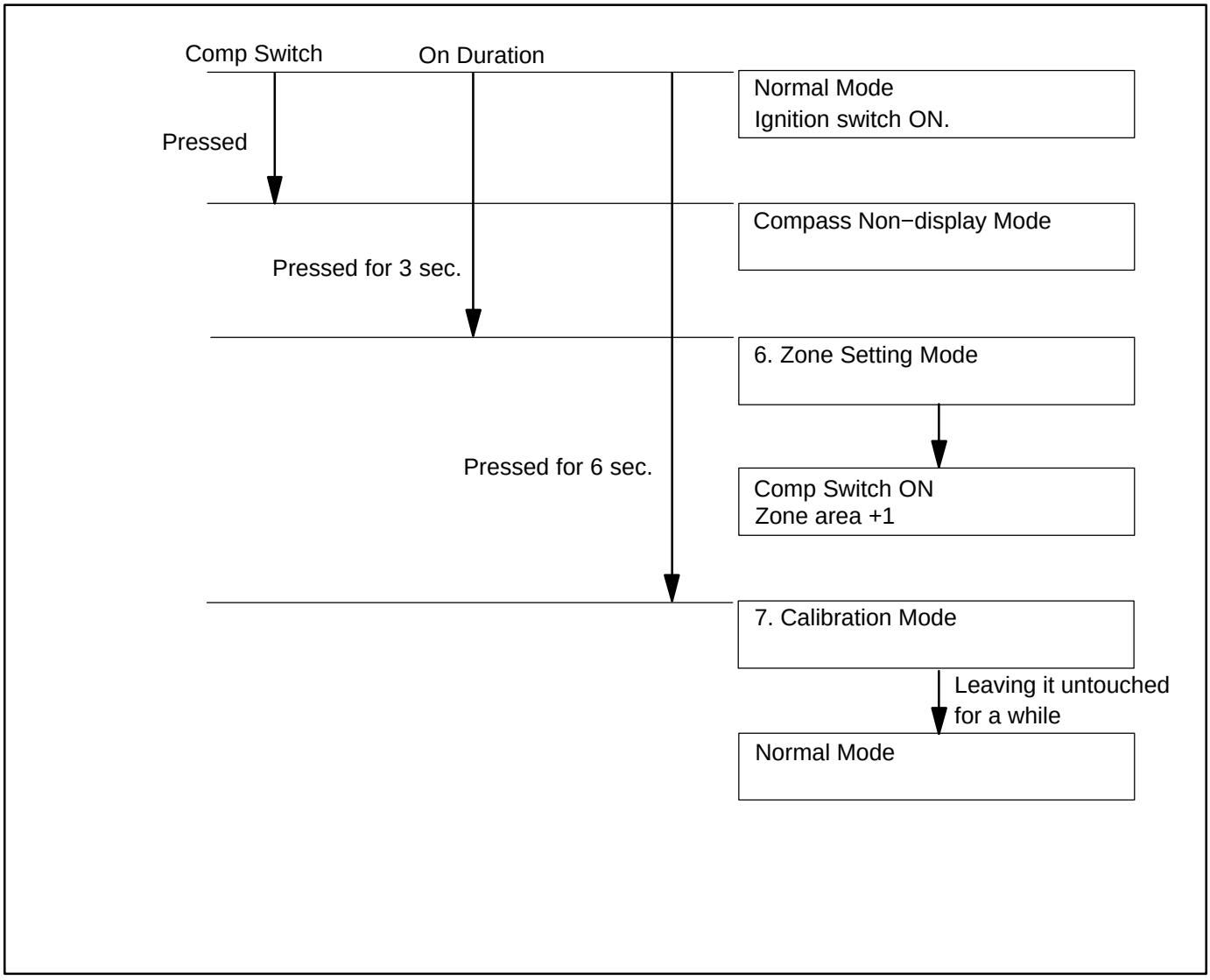

6. ZONE SETTING MODE

(a) Press the comp switch for 3 seconds. In the normal mode, the zone setting mode will activate. A number (1−15) is displayed on the compass display.

HINT:

In the initial status, ”8” is displayed.

(b) The displayed number increases +1 every time the comp switch is pressed. Referring to the map, check the number for the area where the vehicle will be used and set the zone number.

(c) Leave it untouched for several seconds after setting and check that the compass display shows an azimuthal direction (N, NE, E, SE, S, SW, W or NW) or ”C”.

7. CALIBRATION SETTING MODE

(a) Press the comp switch for 6 seconds. in the normal mode, this mode will also activate.

(b) Drive the vehicle at a slow speed of 8 km/h (5 MPH) or less in the circular direction.

(c) Driving around the circle 1 to 3 times will display the azimuthal direction on the display, completing the calibration.

HINT:

Once calibration is completed, it is not necessary to perform the above procedures unless the magnetic field strength is drastically changed. If this happens, the azimuthal display will be changed to ”C”.

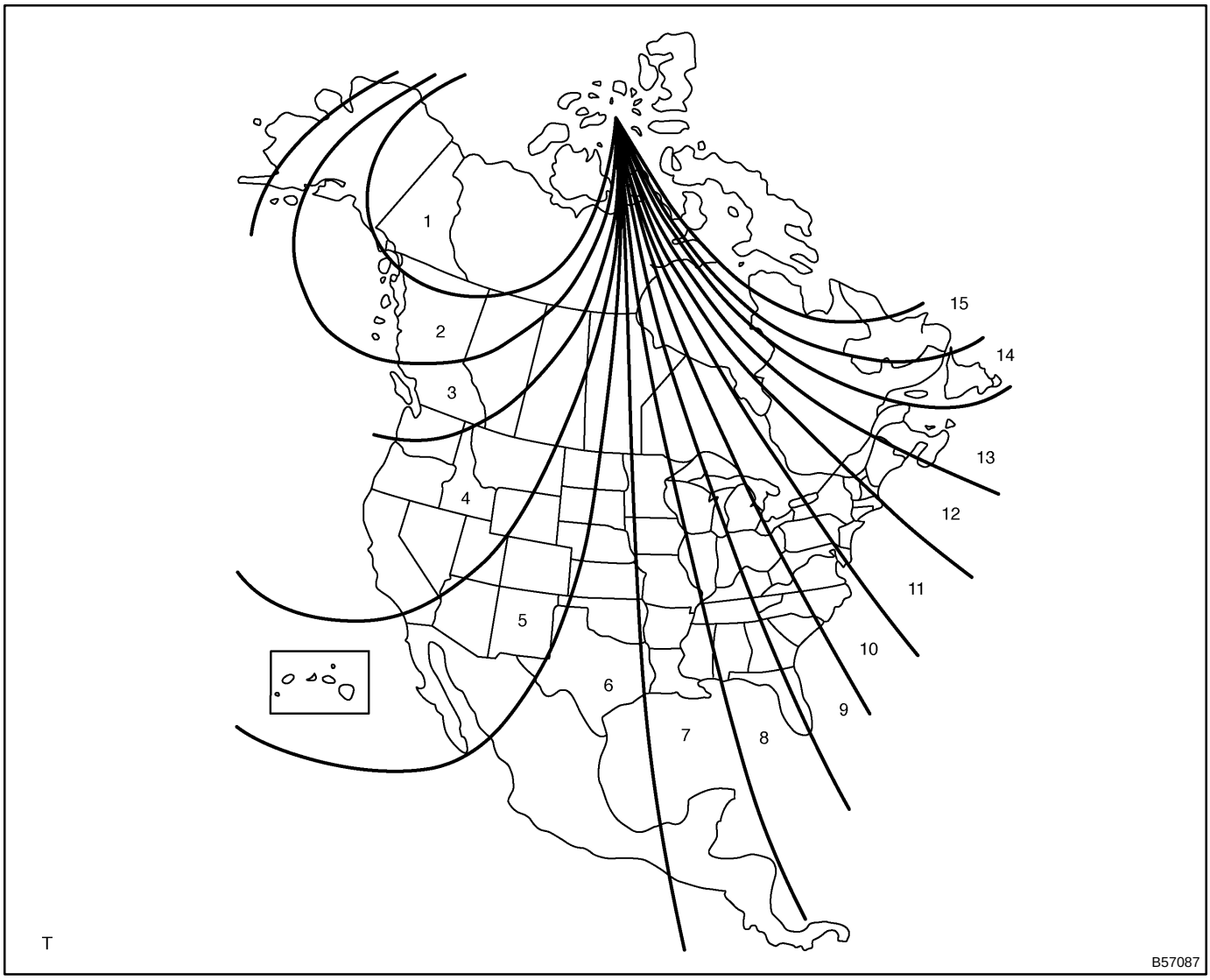

700B4−02

INSPECTION

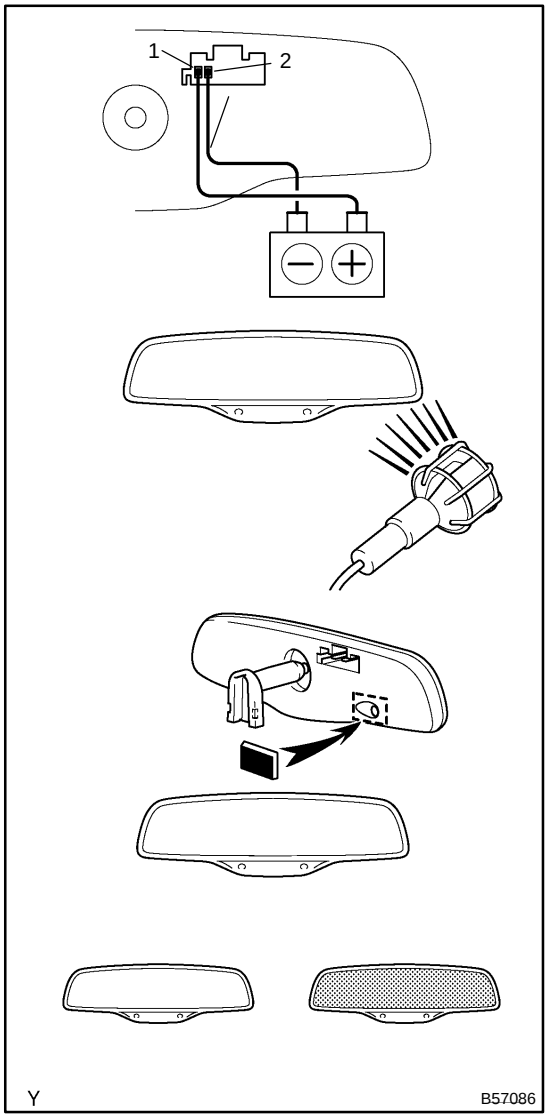

1. INSPECT INNER REAR VIEW MIRROR ASSY

(a) Inspect operation of the elector chromic inner mirror.

(1) Connect the positive (+) lead from the battery to terminal 1 and the negative (−) lead to terminal 2.

(2) Attach a black colored tape to the forward sensor to prevent it from sensing.

(3) Light up the mirror with an electric light, and check that the mirror surface changes from ”bright” to ”dark”.

If operation is not as specified, replace the inner mirror.

OUTER REAR VIEW MIRROR SUB−ASSY LH

700BF−02

REPLACEMENT

HINT:

On the RH side, use the same procedures as on the LH side.

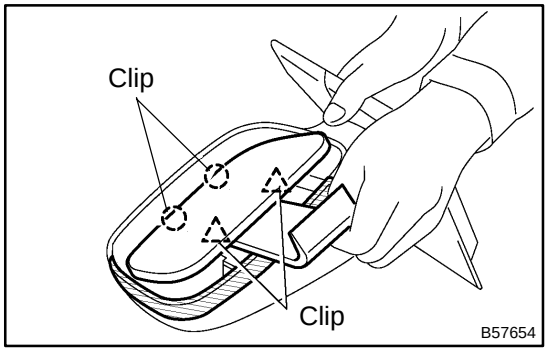

1. REMOVE OUTER REAR VIEW MIRROR SUB−ASSY LH(TMC made)

(a) Tape the lower part of outer mirror body with protection tape.

(b) Using a roof−moulding remover, disengage the clips placed in the lower part of the mirror.

(c) Pull out the outer rear view mirror.

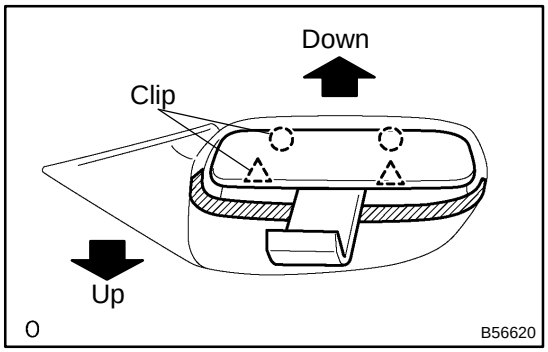

2. REMOVE OUTER REAR VIEW MIRROR SUB−ASSY LH(TMMK made)

(a) Tape the upper part of outer mirror body with protection tape.

(b) Using a roof−mouding remover, disengage the clips placed in the upper part of the mirror.

(c) Pull out the outer rear view mirror.

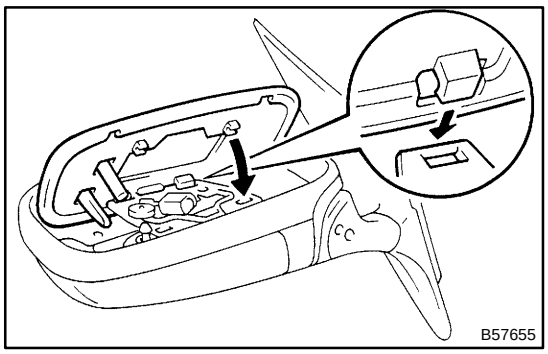

3. INSTALL OUTER REAR VIEW MIRROR SUB−ASSY LH(TMC made)

(a) Insert the claws placed in the upper part of backside of the mirror into the actuator hole.

(b) Set the mirror in the actuator.

(c) Insert the lower portion of the mirror to engage the 2 clips securely.

4. INSTALL OUTER REAR VIEW MIRROR SUB−ASSY LH(TMMK made)

(a) Insert the claws placed in the lower part of backside of the mirror into the actuator hole.

(b) Set the mirror in the actuator.

(c) Insert the upper portion of the mirror to engage the 2 clips securely.

COMBINATION METER

7105L–06

PROBLEM SYMPTOMS TABLE

Warning Lights:

Symptom	Suspected Area	See page
Check engine warning light does not come on.	1. Wire Harness or Connector 2. ECM 3. Combination Meter Assy	– 05–5 05–353 05–496 71–29
Discharge warning light does not come on.	1. Wire Harness or Connector 2. ECM 3. Combination Meter Assy	– 05–5 05–353 05–496 71–29
Brake warning light does not come on.	1. Wire Harness or Connector 2. Brake Actuator Assy (ABS) 3. Combination Meter Assy	– 05–870 05–930 71–29
ABS warning light does not come on.	1. Wire Harness or Connector 2. Brake Actuator Assy (ABS) 3. ABS & Traction Actuator Assy (VSC) 4. Combination Meter Assy	– 05–870 05–930 05–983 71–29
SRS warning light does not come on.	1. Wire Harness or Connector 2. Airbag Sensor Assy Center 3. Combination Meter Assy	– 05–1449 71–29
Open door warning light does not come on.	1. Wire Harness or Connector 2. Front Door Courtesy Lamp Switch Circuit 3. Body ECU 4. Combination Meter Assy	– 05–2026 – 71–29
Fuel level warning light does not come on.	1. Wire Harness or Connector 2. Fuel Sender Gauge Assy 3. Combination Meter Assy	– – 71–29
Low oil pressure warning light does not come on.	1. Wire Harness or Connector 2. Low Oil Pressure Warning Switch 3. Combination Meter Assy	– 71–3 71–29
Window washer level warning does not come on.	1. Wire Harness or Connector 2. Window Washer Level Waring Switch 3. Combination Meter Assy	– 71–3 71–29
Seat belt warning lamp for driver's seat does not come on.	1. Wire Harness or Connector 2. Refer to Troubleshooting 3. Combination Meter Assy	– 05–2021 71–29

Indicator Lights:

Symptom	Suspected Area	See page
Shift indicator lights do not come on.	1. Wire Harness or Connector 2. Park/Neutral Position Switch Circuit 3. Combination Meter Assy	– 05–1111 05–1239 71–29
Turn signal indicator light does not come on.	1. Wire Harness or Connector 2. Turn Signal and Hazard Warning System 3. Combination Meter Assy	– 05–1788 71–29
High beam indicator light does not come on.	1. Wire Harness or Connector 2. Headlight Dimmer Switch 3. Combination Meter Assy	– 05–1788 71–29

O/D OFF indicator light does not come on.	1. Wire Harness or Connector 2. O/D Main Switch Circuit 3. ECM 4. Combination Meter Assy	– 05−1111 05−1239 05−5 05−353 05−496 71−29
TRAC indicator light does not come on.	1. Wire Harness or Connector 2. VSC OFF Indicator, VSC Cut Switch Circuit 3. Combination Meter Assy	– 05−983 71−29
SLIP indicator light does not come on.	1. Wire Harness or Connector 2. Slip Indicator Circuit 3. Combination Meter Assy	– 05−2206 71−29
HEADLAMP indicator light does not come on.	1. Wire Harness or Connector 2. Combination Meter Assy	– 71−29
MAINT REQD indicator light does not come on.	1. Refer to Troubleshooting 2. Combination Meter Assy	71−3 71−29
CRUISE indicator light does not come on.	1. Wire Harness or Connector 2. ABS & Traction Actuator Assy (VSC) 3. Combination Meter Assy	– 05−2206 71−29
VSC indicator light does not come on.	1. Wire Harness or Connector 2. ABS & Traction Actuator Assy (VSC) 3. Combination Meter Assy	– 05−2206 71−29

Meter Gauges:

Symptom	Suspected Area	See page
Tachometer, fuel gauge and water temperature gauge do not operate.	1. Wire Harness or Connector 2. GAUGE Fuse 3. Combination Meter Assy	– – 71−29
Fuel gauge does not operate or abnormal operation.	1. Wire Harness or Connector 2. Fuel Receiver Gauge 3. Combination Meter Assy	– – 71−29

Buzzer:

Symptom	Suspected Area	See page
Key reminder warning buzzer does not sound.	1. Refer to troubleshooting 2. Wire Harness or Connector 3. Combination Meter Assy	05−2026 – 71−29
Driver's seat belt warning buzzer does not sound.	1. Refer to troubleshooting 2. Wire Harness or Connector 3. Combination Meter Assy	05−2026 – 71−29
Front passenger's seat belt warning buzzer does not sound.	1. Refer to troubleshooting 2. Wire Harness or Connector 3. Combination Meter Assy	05−2026 – 71−29

Clock:

Symptom	Suspected Area	See page
Seat belt warning lamp for passenger's seat does not come on.	1. Wire Harness or Connector 2. Refer to Troubleshooting 3. Combination Meter Assy	– 05−2023 71−29

710P4−02

ON−VEHICLE INSPECTION

1. INSPECT SPEEDOMETER

(a) Check the operation.

(1) Using a speedometer tester, inspect the speedometer for allowable indication error and check the operation of the odometer.

USA (mph):

Standard indication	Allowable range
20 mph	20 to 23.0 mph
40 mph	40 to 43.5 mph
60 mph	60 to 64.0 mph
80 mph	80 to 84.5 mph
100 mph	100 to 105.0 mph
120 mph	120 to 125.5 mph

CANADA (km/h):

Standard indication	Allowable range
20 km/h	17.5 to 21.5 km/h
40 km/h	38.0 to 42.0 km/h
60 km/h	58.0 to 63.0 km/h
80 km/h	78.0 to 84.0 km/h
100 km/h	98.5 to 104.5 km/h
120 km/h	119.0 to 125.0 km/h
140 km/h	139.0 to 146.0 km/h
160 km/h	159.0 to 167.0 km/h
180 km/h	179.0 to 188.0 km/h
200 km/h	199.0 to 209.0 km/h

NOTICE:

Tire wear and tire over or under inflation will cause the indication error.

(2) Check the deflection range of the speedometer indicator.

Reference: Below 0.5 km/h (0.3 mph)

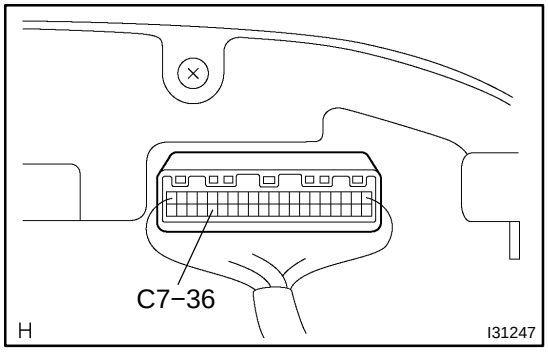

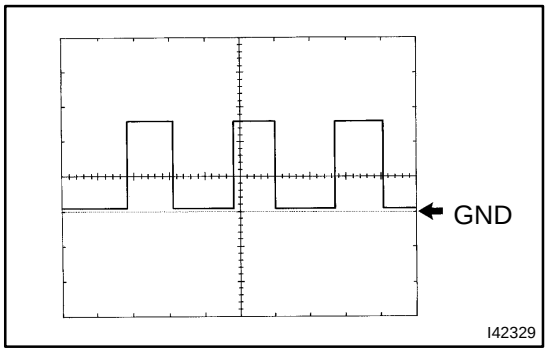

2. INSPECT OUTPUT SIGNAL OF VEHICLE SPEED

(a) Check the input signal wave form.

(1) Remove the combination meter with connectors still connected.

(2) Connect the oscilloscope to terminal C7−36 and body ground.

(3) Start the engine.

(4) Check the signal wave form.

OK:

Signal wave form generates.

HINT:

A wave form as shown on the left appears if the voltage is 12 V under the following conditions:

Item	Condition
Tool setting	5 V/DIV, 20 ms/DIV
Vehicle condition	Driving at approx. 20 km/h (12 mph)

HINT:

As vehicle speed increases, the cycle of the signal wave form narrows.

3. INSPECT TACHOMETER

(a) Check the operation

(1) Connect a tune−up test tachometer, and start the engine.

NOTICE:

- **Reversing the connection of the tachometer will damage the transistors and diodes inside.**
- **When removing or installing the tachometer, be careful not to drop or subject it to heavy shocks.**

(2) Compare the result of the test and tachometer indications.

DC 13.5 V, 25 C at (77 F)

2AZ−FE:

Standard indication (r/min)	Allowable range (r/min) Data in ( ) are for reference
700	630 to 770
1,000	(900 to 1,100)
2,000	(1,850 to 2,150)
3,000	2,800 to 3,200
4,000	(3,800 to 4,200)
5,000	4,800 to 5,200
6,000	(6,750 to 6,250)
7,000	(6,700 to 7,000)

1MZ−FE, 3MZ−FE:

Standard indication (r/min)	Allowable range (r/min) Data in ( ) are for reference
700	618 to 758
1,000	(883 to 1,083)
2,000	(1,817 to 2,117)
3,000	2,750 to 3,150
4,000	(3,733 to 4,133)
5,000	4,717 to 5,117
6,000	(5,650 to 6,150)
7,000	(6,583 to 7,000)

Fuel Sender Gauge:



Ie−5−1−A I30899

4. INSPECT FUEL RECEIVER GAUGE

(a) Inspect the circuit.

(1) Disconnect the connector from the sender gauge.

(2) Turn the ignition switch ON, then check the position of the receiver gauge needle.

Standard:

Needle position is EMPTY and FUEL warning light comes on.

5. INSPECT FUEL LEVEL WARNING

(a) Inspect the circuit.

(1) Disconnect the connector from the sender gauge.

(2) Turn the ignition switch to ON, and check the position of the fuel level needle and the FUEL level warning light.

Standard:

Needle position is EMPTY and FUEL warning light comes on.

6. INSPECT ENGINE COOLANT TEMPERATURE RECEIVER GAUGE WARNING LIGHT

(a) Inspect the circuit.

(1) Disconnect the connector from the sender gauge.

(2) Turn the ignition switch to ON, and check the position of the water temperature receiver gauge needle.

OK:

Needle position: COOL

(3) Ground terminal 2 on the wire harness side, then check the position of the water temperature receiver gauge needle.

OK:

Needle position: HOT

7. INSPECT SEAT BELT WARNING LIGHT (Driver Side)

(a) Check the operation.

(1) Turn the ignition switch to ON and check that the warning light lights up.

(2) Fasten the outer belt to the inner belt and check that the warning light goes off.

(3) Disconnect the connector from the buckle switch and ground terminal on the wire harness side connector.

(4) Turn the ignition switch to ON and check the warning light.

OK:

Seat belt warning light: Come on

8. INSPECT LOW OIL PRESSURE WARNING LIGHT

(a) Inspect the circuit.

(1) Disconnect the connector from the low oil pressure switch.

(2) Turn the ignition switch to ON.

(3) Connect the terminal of wire harness side connector to ground, then check the warning low oil pressure warning light.

OK:

Low oil pressure warning light: Come on

9. INSPECT BRAKE WARNING LIGHT

(a) Inspect the parking brake warning light.

(1) Disconnect the connector from the parking brake switch and ground terminal on the wire harness side connector.

(2) Turn the ignition switch to ON and check the warning light.

OK:

Brake warning light: Come on

(b) Inspect the brake fluid level warning light.

(1) Disconnect the connector from the brake fluid level warning switch and connect terminals on the wire harness side connector.

(2) Turn the ignition switch to ON and check the warning light.

OK :

Brake fluid level warning light: Come on

10. INSPECT BRAKE FLUID LEVEL WARNING SWITCH

(a) Inspect the continuity.

(1) Remove the reservoir tank cap and strainer.

(2) Disconnect the connector.

(3) Check that the continuity exists between the terminals.

OK:

Float up (switch off): No continuity

(4) Use a syphon, etc., to take fluid out of the reservoir tank.

(5) Check that the continuity exists between the terminals.

OK:

Float down (switch on): Continuity

(6) Pour the fluid back in the reservoir tank.

11. INSPECT SEAT BELT WARNING BUZZER

(a) When only driver's seat is occupied.

(1) Turn the ignition switch to ON and check that the driver's seat belt warning sounds if the driver's seat belt is not fastened about 1.8 seconds after the ignition switch is turned to ON.

(2) Check that the buzzer stops after about 6 seconds.

(b) When both driver's seat and passenger's seat are occupied

(1) When either of the seat belts for the driver seat and front passenger seat is not fastened within 13.8 seconds after the ignition switch is turned to ON, the buzzer sounds for 9.6 seconds.

(2) When the seat belt is still not fastened after that, the buzzer is switched to level 2 and sounds for 20 seconds.

12. INSPECT KEY REMINDER WARNING BUZZER

(a) Check warning buzzer function.

(1) Turn the ignition switch off and check that the key reminder warning sounds if the ignition key is inserted into the key cylinder and the front driver side door is opened.

OK :

Warning buzzer sounds

13. INSPECT WASHER LEVEL WARNING SWITCH

(a) Disconnect the connector from the washer level warning switch.

(b) Turn the ignition switch to ON.

(c) Ground terminal of the wire harness side connector, then check the washer level warning light.

OK:

Washer level warning light comes on.

14. MAINTENANCE LIQUID RESETTING PROCEDURE

Indicator Condition:

State	Condition	Specified state
Blinking	The vehicle runs 4,500 ± 100 miles after the previous setting	The indicator blinks for 15 seconds after the ignition switch is turned on (including 3 seconds for a valve check).
Continuously Illuminated	The vehicle runs 5,000 ± 100 miles after the previous setting	The indicator is continuously illuminated after the ignition switch is turned on.

(a) Set the display window to ODO.
(b) Turn the ignition switch off.
(c) While pressing the reset switch, turn the ignition switch to the ON position (keep pressing for at least 5 seconds).
(d) Reset procedure is completed.

HINT:

- If the ignition switch is turned off during the reset procedure, reset mode is canceled.
- If the reset switch is turned off during the reset procedure, reset mode is canceled and the display shows the condition prior to the reset procedure.

710PD−02

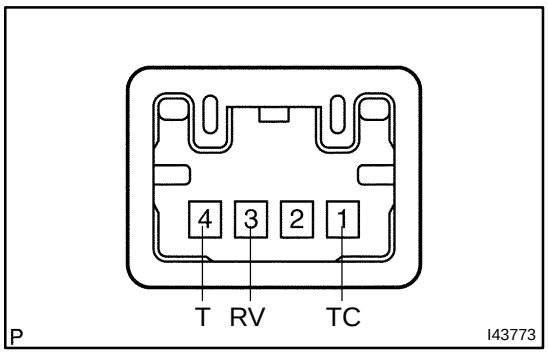

INSPECTION

1. LIGHT CONTROL RHEOSTAT

(a) Inspect continuity.

(1) Check the continuity between the light control rheostat connector terminals when operating the rheostat volume knob.

Standard:

Switch	Tester connection (Symbol)	Condition
Turn the knob to maximum	1 (TC) − 4 (T)	Below 1 Ω
Conditions oher than the above	1 (TC) − 4 (T)	10 kΩ or higher

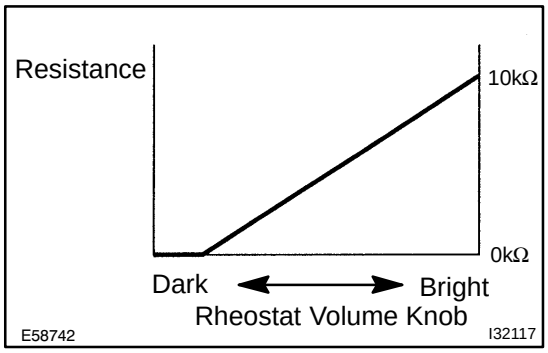

(b) Check the resistance between terminal 3 (RV) and terminal 4 (T) when operating the light control rheostat volume knob. Also, check that the resistance changes continuously.

Standard:

Turn the knob to maximum: Approx. 10 kΩ

Turn the knob to minimum: Approx. 0 kΩ

INSTRUMENT PANEL/METER

COMPONENTS

710P3−01

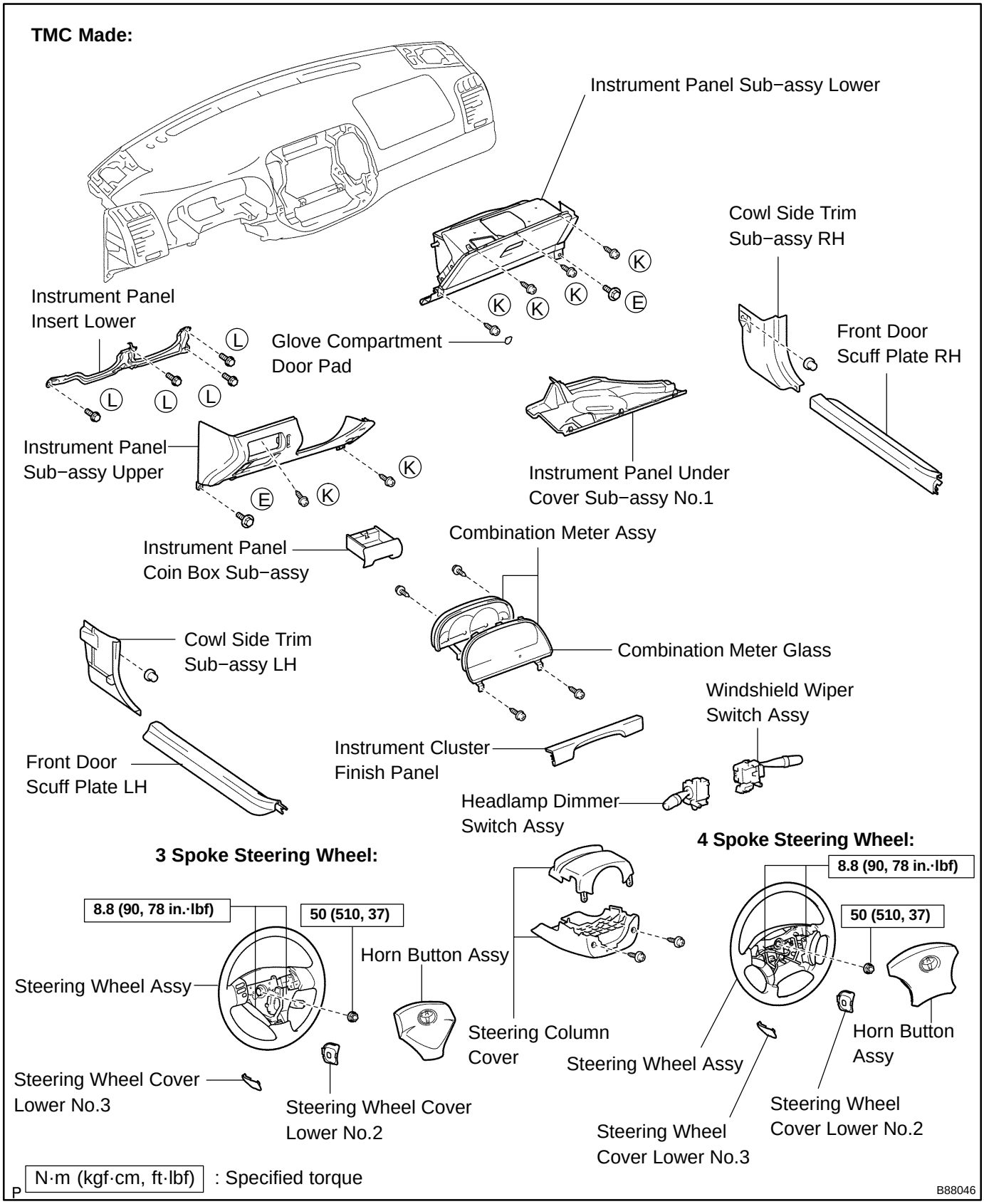

TMMK Made:

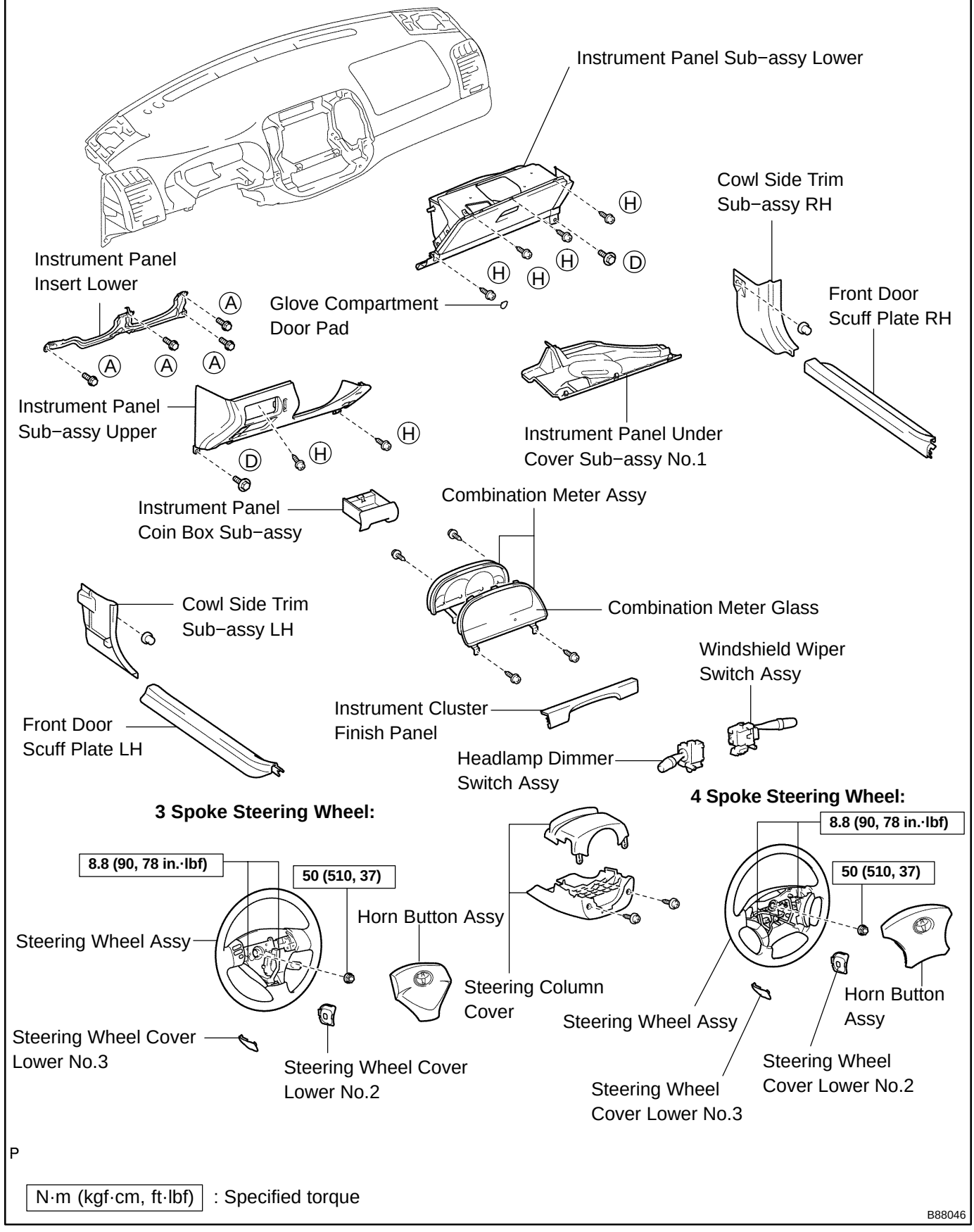

P

N·m (kgf·cm, ft·lbf) : Specified torque

B88046

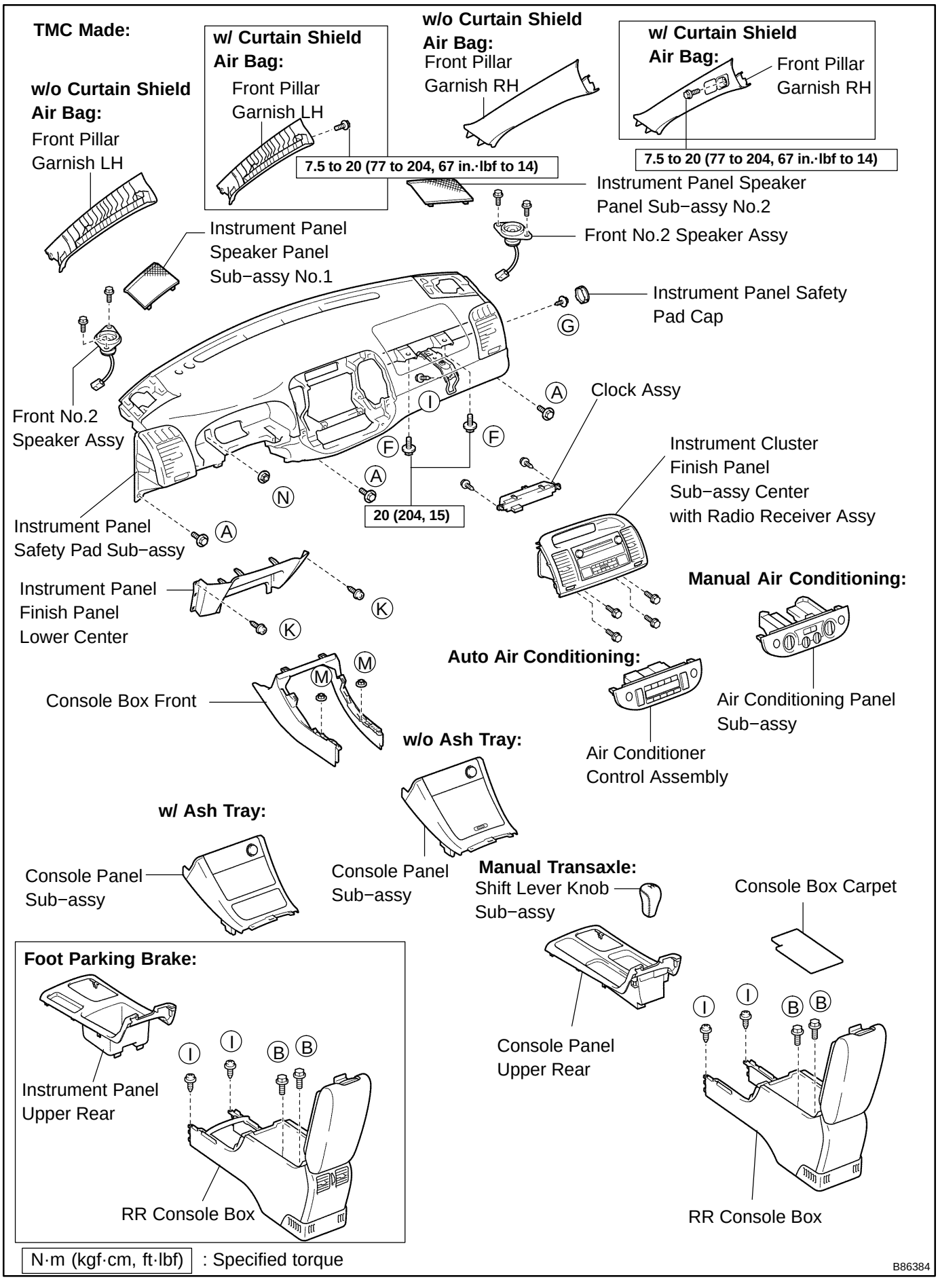
TMC Made:
w/o Curtain Shield Air Bag:
Front Pillar Garnish LH
w/ Curtain Shield Air Bag:
Front Pillar Garnish LH
7.5 to 20 (77 to 204, 67 in.·lbf to 14)
w/o Curtain Shield Air Bag:
Front Pillar Garnish RH
w/ Curtain Shield Air Bag:
Front Pillar Garnish RH
7.5 to 20 (77 to 204, 67 in.·lbf to 14)
Instrument Panel Speaker Panel Sub−assy No.2
Front No.2 Speaker Assy
Instrument Panel Speaker Panel Sub−assy No.1
Instrument Panel Safety Pad Cap
Clock Assy
Front No.2 Speaker Assy
Instrument Cluster Finish Panel Sub−assy Center with Radio Receiver Assy
20 (204, 15)
Instrument Panel Safety Pad Sub−assy
Instrument Panel Finish Panel Lower Center
Manual Air Conditioning:
Air Conditioning Panel Sub−assy
Auto Air Conditioning:
Air Conditioner Control Assembly
Console Box Front
w/o Ash Tray:
w/ Ash Tray:
Console Panel Sub−assy
Console Panel Sub−assy
Manual Transaxle:
Shift Lever Knob Sub−assy
Console Box Carpet
Console Panel Upper Rear
Foot Parking Brake:
Instrument Panel Upper Rear
RR Console Box
RR Console Box
N·m (kgf·cm, ft·lbf) : Specified torque
B86384

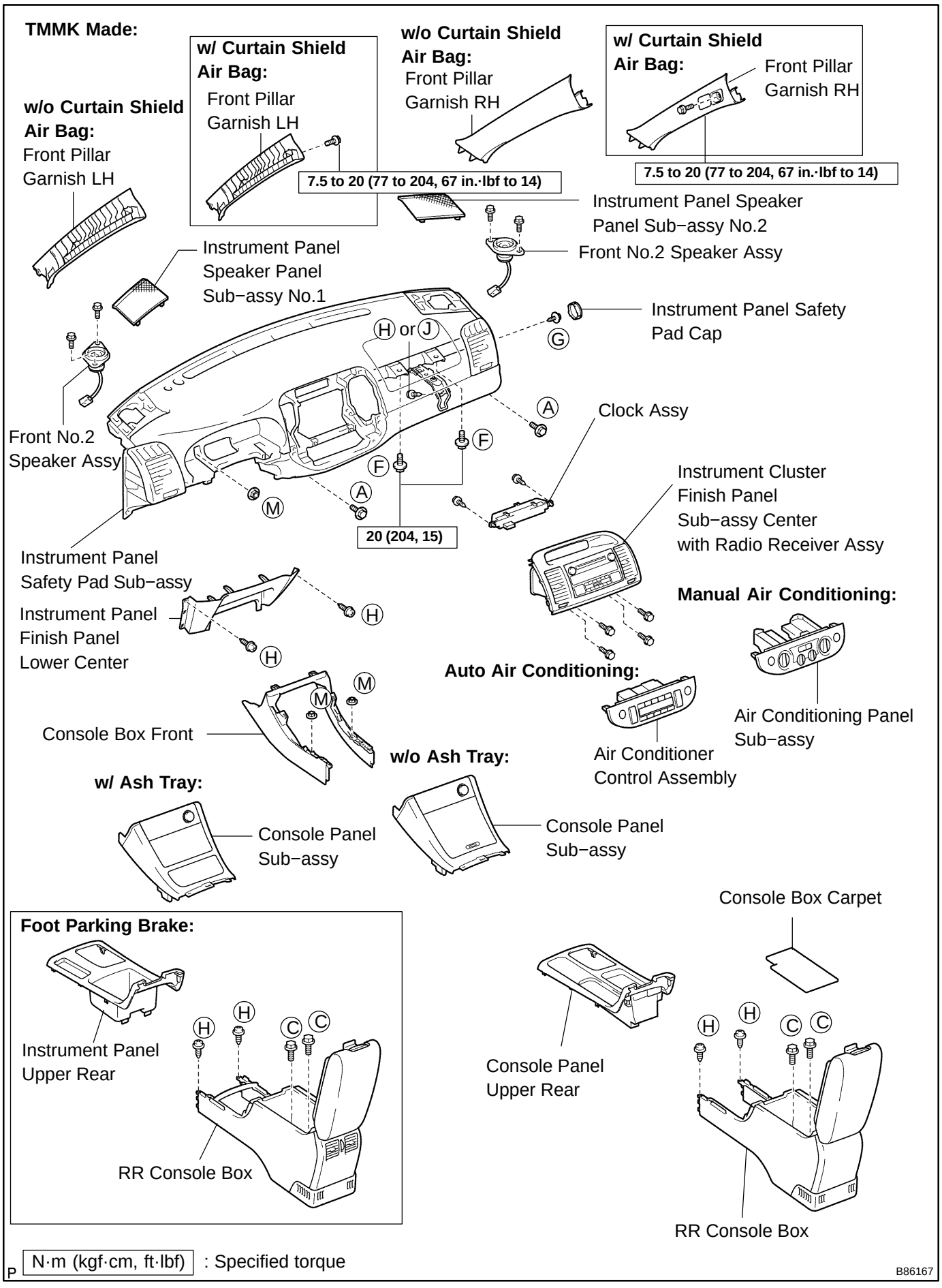
TMMK Made:
w/o Curtain Shield Air Bag:
Front Pillar Garnish LH
w/ Curtain Shield Air Bag:
Front Pillar Garnish LH
7.5 to 20 (77 to 204, 67 in.·lbf to 14)
w/o Curtain Shield Air Bag:
Front Pillar Garnish RH
w/ Curtain Shield Air Bag:
Front Pillar Garnish RH
7.5 to 20 (77 to 204, 67 in.·lbf to 14)
Instrument Panel Speaker Panel Sub−assy No.2
Front No.2 Speaker Assy
Instrument Panel Speaker Panel Sub−assy No.1
Instrument Panel Safety Pad Cap
H or J
G
A
Clock Assy
Front No.2 Speaker Assy
F
F
A
M
20 (204, 15)
Instrument Cluster Finish Panel Sub−assy Center with Radio Receiver Assy
Instrument Panel Safety Pad Sub−assy
Instrument Panel Finish Panel Lower Center
H
H
Manual Air Conditioning:
Air Conditioning Panel Sub−assy
Auto Air Conditioning:
Air Conditioner Control Assembly
M
M
Console Box Front
w/o Ash Tray:
Console Panel Sub−assy
w/ Ash Tray:
Console Panel Sub−assy
Foot Parking Brake:
Instrument Panel Upper Rear
H
H
C
C
RR Console Box
Console Box Carpet
Console Panel Upper Rear
H
H
C
C
RR Console Box
N·m (kgf·cm, ft·lbf) : Specified torque
B86167

TMC Made:

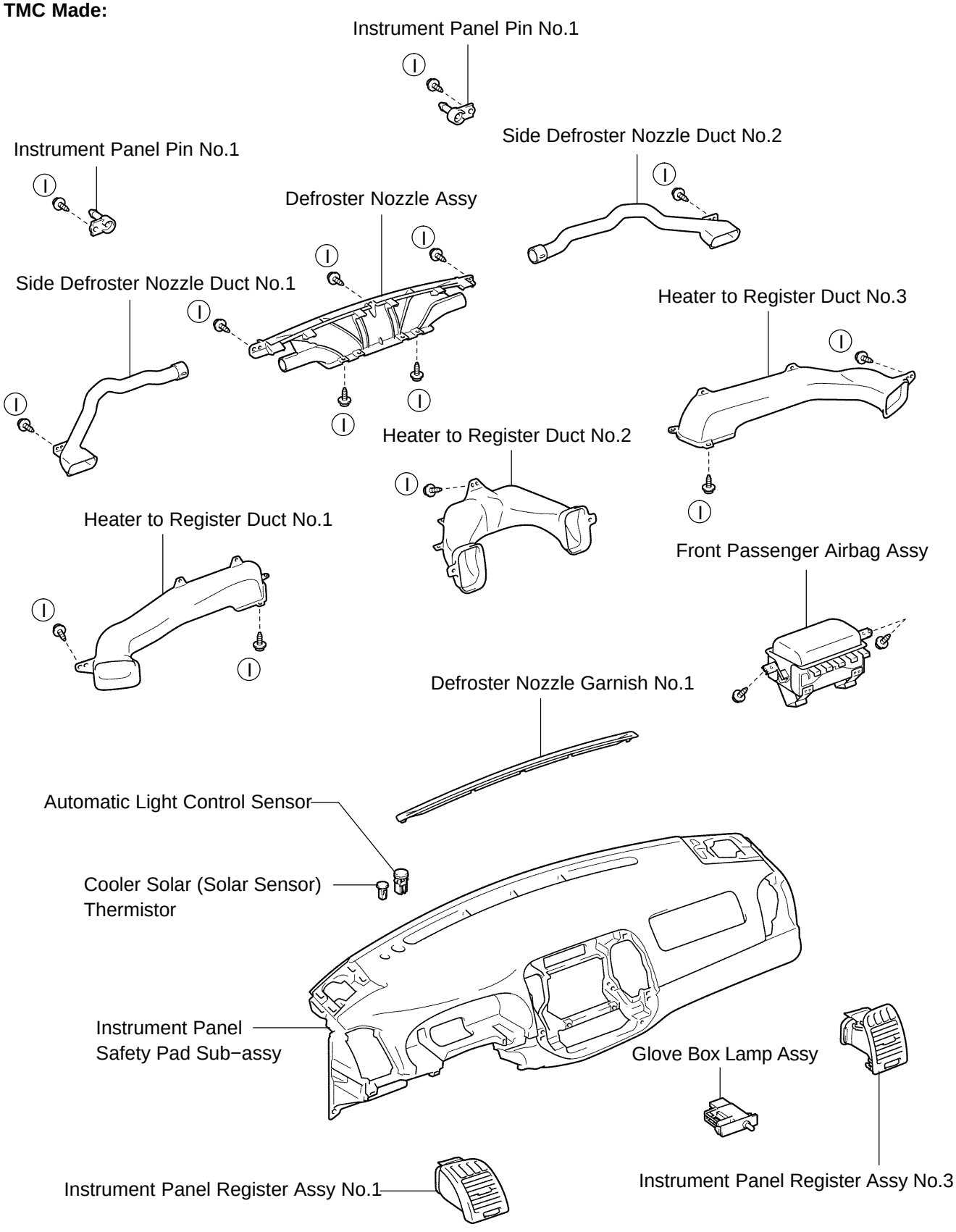
Instrument Panel Pin No.1
Instrument Panel Pin No.1
Side Defroster Nozzle Duct No.2
Defroster Nozzle Assy
Side Defroster Nozzle Duct No.1
Heater to Register Duct No.3
Heater to Register Duct No.2
Heater to Register Duct No.1
Front Passenger Airbag Assy
Defroster Nozzle Garnish No.1
Automatic Light Control Sensor
Cooler Solar (Solar Sensor) Thermistor
Instrument Panel Safety Pad Sub−assy
Glove Box Lamp Assy
Instrument Panel Register Assy No.1
Instrument Panel Register Assy No.3
B86386

TMMK Made:

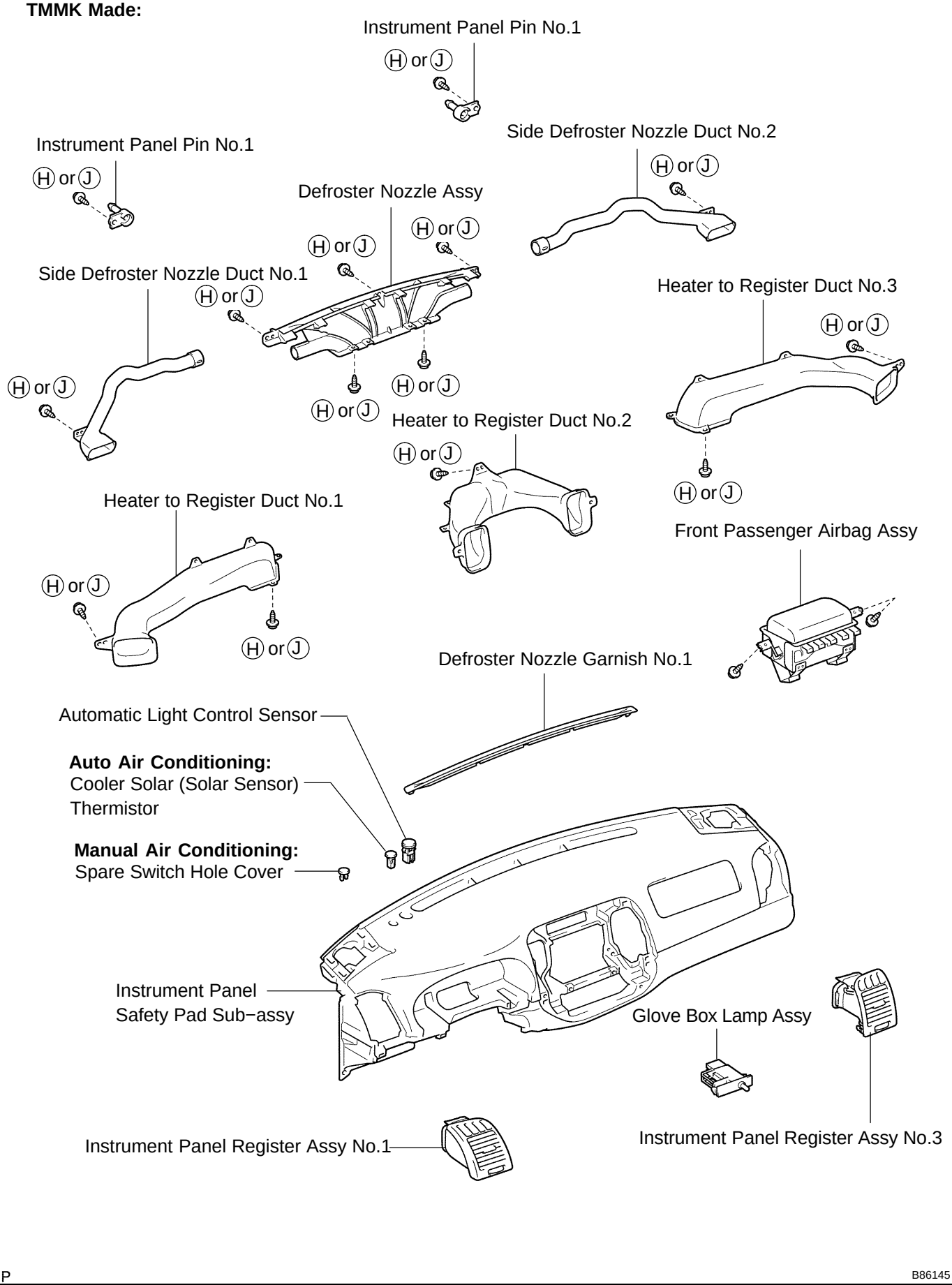

P B86145

INSTRUMENT PANEL SAFETY PAD SUB−ASSY

7105H−03

PRECAUTION

1. PRECAUTION FOR VEHICLE WITH SRS AIRBAG AND SEAT BELT PRETENSIONER

(a) Some operations in this section may affect the SRS airbags. Prior to performing the corresponding operations, read the SRS airbag NOTICE (See page 60−1).

710P2−01

REPLACEMENT

HINT:

- COMPONENTS: See page 71−9.
- Installation is in the reverse order of removal.

1. TABLE OF BOLT, SCREW AND NUT

HINT:

All bolts, screws and nuts relevant to installing and removing the instrument panel are shown along with their alphabet code in the table below.

mm (in.) (L = Length)

Code	Shape	Code	Shape	Code	Shape
<A>	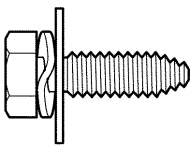 ϕ = 6 (0.24) L = 20 (0.79) 90119-06144	<B>	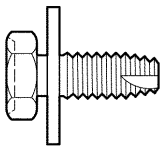 ϕ = 6 (0.24) L = 16 (0.63) 90119-06480	<C>	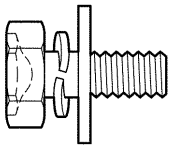 ϕ = 6 (0.24) L = 16 (0.63) 90119-06220
<D>	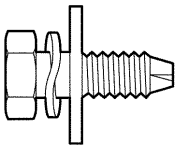 ϕ = 6 (0.24) L = 18 (0.71) 90119-06428	<E>	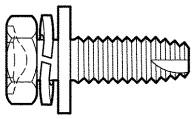 ϕ = 6 (0.24) L = 20 (0.79) 90119-06166	<F>	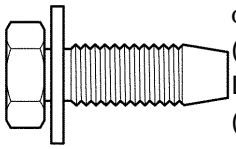 ϕ = 8 (0.31) L = 20 (0.79) 91633-60820
<G>	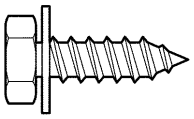 ϕ = 6 (0.24) L = 20 (0.79) 90159-60200	<H>	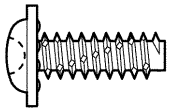 ϕ = 5 (0.20) L = 14 (0.55) 90167-50002	<I>	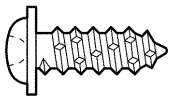 ϕ = 5 (0.20) L = 16 (0.63) 93567-15016
<J>	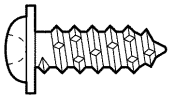 ϕ = 5 (0.20) L = 16 (0.63) 93567-55016	<K>	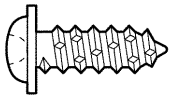 ϕ = 5 (0.20) L = 18 (0.71) 93567-55018	<L>	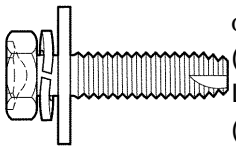 ϕ = 6 (0.24) L = 25 (0.98) 90119-06116
<M>	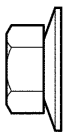 ϕ = 6 (0.24) 90179-06097	<N>	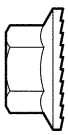 ϕ = 6 (0.24) 90179-06115		

P

2. DISCONNECT BATTERY NEGATIVE TERMINAL (SEE PAGE 60−1)
3. REMOVE STEERING WHEEL COVER LOWER NO.2
4. REMOVE STEERING WHEEL COVER LOWER NO.3
5. REMOVE HORN BUTTON ASSY (SEE PAGE 60−25)
6. REMOVE STEERING WHEEL ASSY (SEE PAGE 50−9 or 50−21)
SST 09950−50013 (09951−05010, 09952−05010, 09953−05020, 09954−05021)

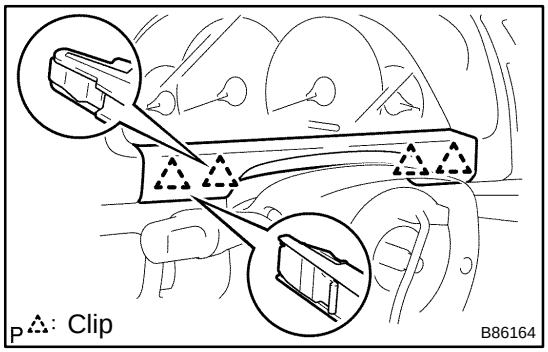

7. REMOVE INSTRUMENT CLUSTER FINISH PANEL
(a) Disengage the 4 clips and remove the instrument cluster finish panel.

8. REMOVE STEERING COLUMN COVER (SEE PAGE 50−9 or 50−21)
9. REMOVE HEADLAMP DIMMER SWITCH ASSY (SEE PAGE 65−23)
10. REMOVE WINDSHIELD WIPER SWITCH ASSY (SEE PAGE 66−10)

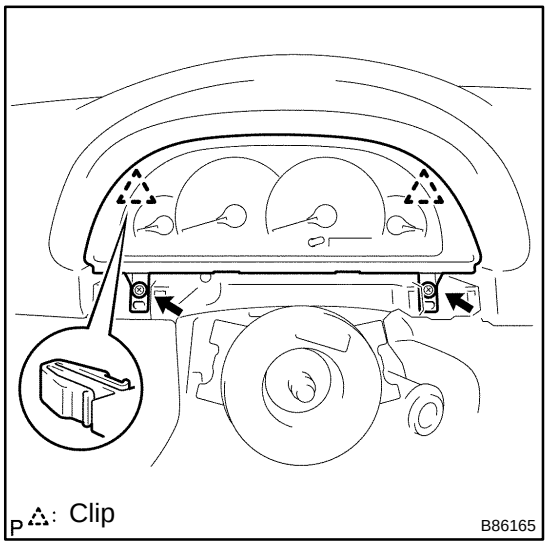

11. REMOVE COMBINATION METER ASSY
(a) Remove the 2 screws and disengage the 2 clips.
(b) Pull out the combination meter assy, then disconnect the connectors.

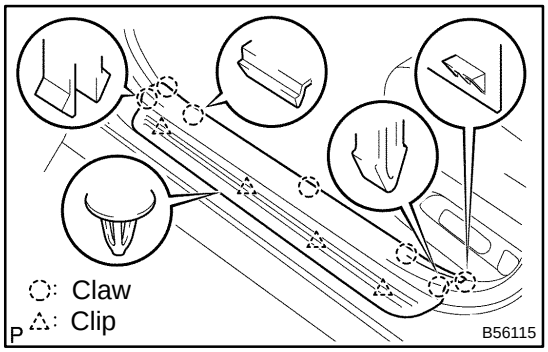

12. REMOVE FRONT DOOR SCUFF PLATE LH
(a) Disengage the 7 claws and 4 clips then remove the front door scuff plate LH.

13. REMOVE FRONT DOOR SCUFF PLATE RH

HINT:

Use the same procedures for the RH side and LH side.

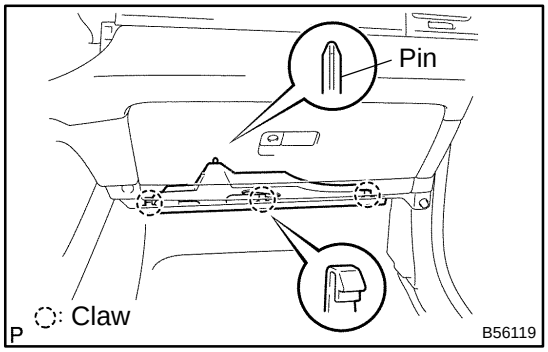

14. REMOVE INSTRUMENT PANEL UNDER COVER SUB−ASSY NO.1

(a) Disengage the 3 claws and pin.

(b) Remove the instrument panel under cover sub−assy No.1.

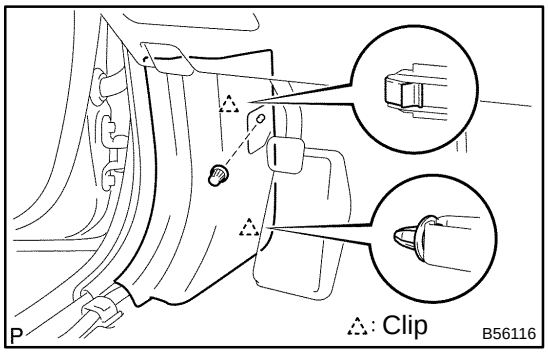

15. REMOVE COWL SIDE TRIM SUB−ASSY LH

(a) Remove the clip.

(b) Disengage the 2 clips and remove the cowl side trim sub−assy LH.

16. REMOVE COWL SIDE TRIM SUB−ASSY RH

HINT:

Use the same procedures for the RH side and LH side.

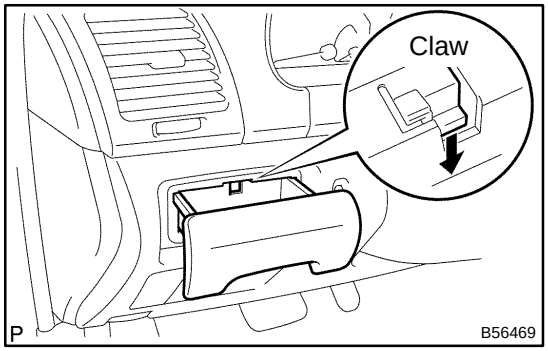

17. REMOVE INSTRUMENT PANEL COIN BOX SUB−ASSY

(a) Disengage the claw and remove the instrument panel coin box sub−assy.

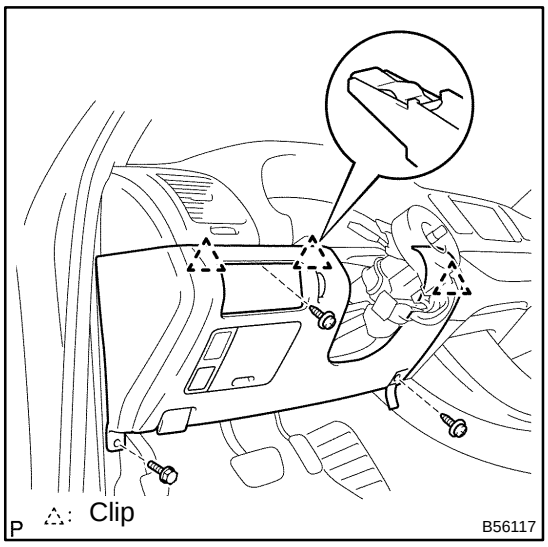

18. REMOVE INSTRUMENT PANEL SUB−ASSY UPPER

(a) Disconnect the hood lock control cable.

(b) Using a screwdriver, open the instrument panel sub−assy upper cover.

HINT:

Tape the screwdriver tip before use.

(c) TMC made:
Remove the bolt <E> and 2 screws <K>.

(d) TMMK made:
Remove the bolt <D> and 2 screws <H>.

(e) Disengage the 3 clips.

(f) Disconnect the connectors and remove the instrument panel sub−assy upper.

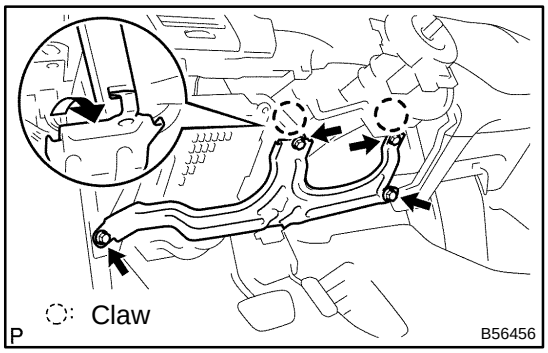

19. REMOVE INSTRUMENT PANEL INSERT LOWER

(a) TMC made:
Remove the 4 bolts <L>.

(b) TMMK made:
Remove the 4 bolts <A>.

(c) Disengage the 2 claws and remove the instrument panel insert lower.

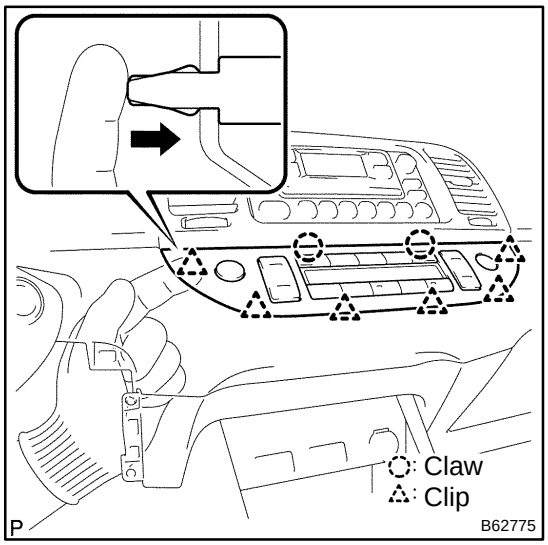

20. REMOVE AIR CONDITIONER CONTROL ASSEMBLY (AUTO AIR CONDITIONING)

(a) Put in a hand from the position indicated in the illustration and push out the clip with fingers.

(b) Remove the remaining clips, disengage the claws, and then take off the air conditioner control assembly.

NOTICE:

- **Perform this procedure wearing the protection gloves.**
- **Do not use any tools to avoid damage to the instrument panel safety pad sub−assembly.**

21. REMOVE AIR CONDITIONING PANEL SUB−ASSY (MANUAL AIR CONDITIONING)

HINT:

Use the same procedures for the air conditioner control assembly and air conditioning panel sub−assy.

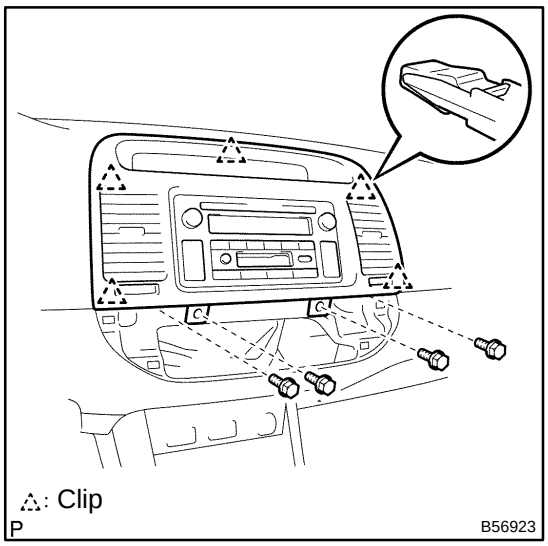

22. REMOVE INSTRUMENT CLUSTER FINISH PANEL SUB−ASSY CENTER

(a) Remove the 4 bolts.

(b) Using a moulding remover, disengage 5 clips, remove the instrument cluster finish panel sub−assy center with radio receiver assy, then disconnect the connectors.

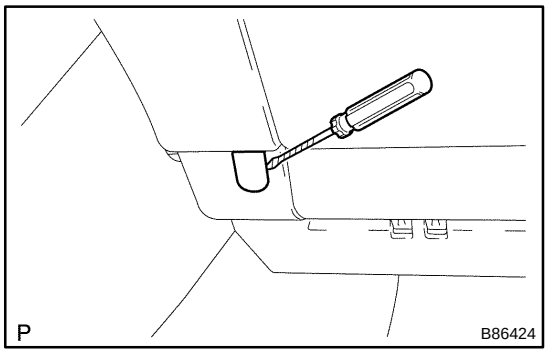

23. REMOVE GLOVE COMPARTMENT DOOR PAD

(a) Using a screwdriver, remove the glove compartment door pad.

HINT:

Tape the screwdriver tip before use.

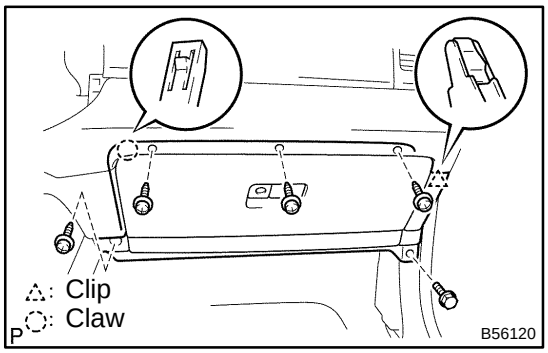

24. REMOVE INSTRUMENT PANEL SUB−ASSY LOWER

(a) TMC made:
Remove the bolt <E> and 4 screws <K>.

(b) TMMK made:
Remove the bolt <D> and 4 screws <H>.

(c) Disengage the claw and clip and remove the instrument panel sub−assy lower.

25. REMOVE SHIFT LEVER KNOB SUB−ASSY (MANUAL TRANSAXLE)

(a) Turn the shift lever knob sub−assy counterclockwise and remove the shift lever knob sub−assy.

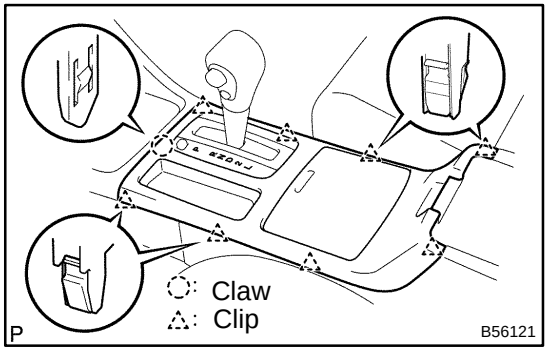

26. REMOVE CONSOLE PANEL UPPER REAR

(a) Foot parking brake:
Using a moulding remover, disengage the claw and 8 clips and remove the console panel upper rear.

HINT:

Set the shift lever in the N position.

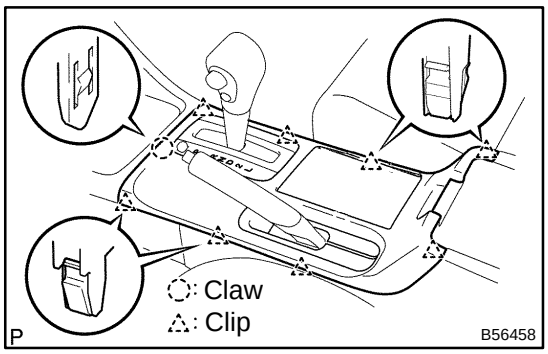

(b) Hand parking brake:
Using a moulding remover, disengage the claw and 8 clips and remove the console panel upper rear.

HINT:
Set the shift lever in the N position (Automatic transaxle).

27. REMOVE CONSOLE BOX CARPET

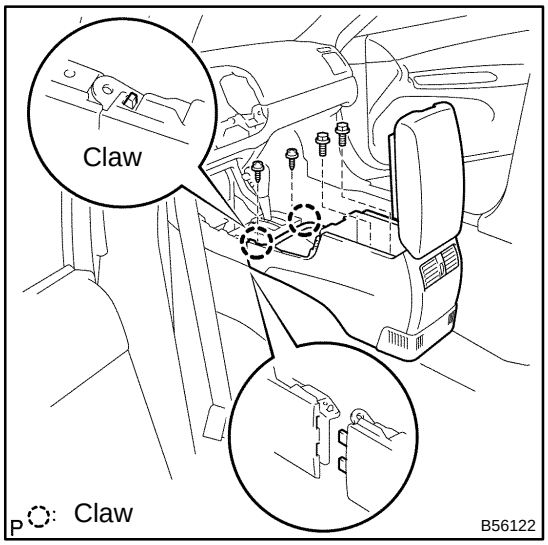

28. REMOVE RR CONSOLE BOX

(a) TMC made:
Remove the 2 bolts <B> and 2 screws <I>.

(b) TMMK made:
Remove the 2 bolts <C> and 2 screws <H>.

(c) Disengage the 2 claws and remove the RR console box.

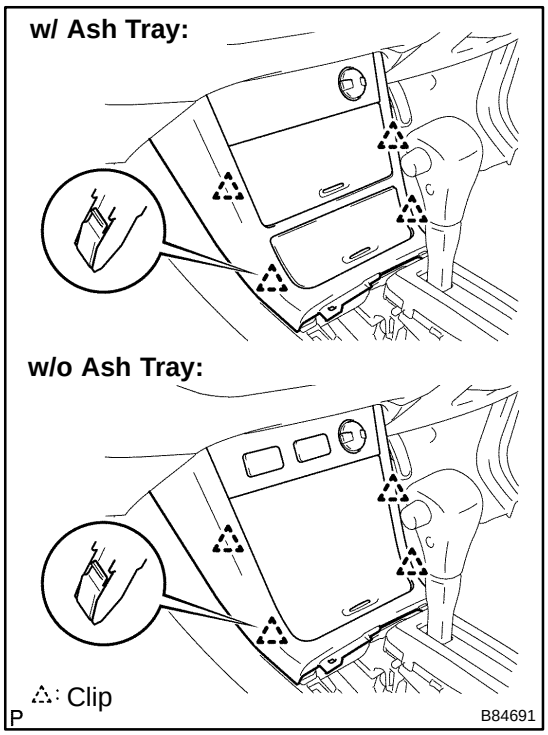

29. REMOVE CONSOLE PANEL SUB−ASSY

(a) Using a moulding remover, disengage the 4 clips.

(b) Disconnect the connectors and remove the console panel sub−assy.

HINT:
Set the shift lever in the N position (Automatic transaxle).

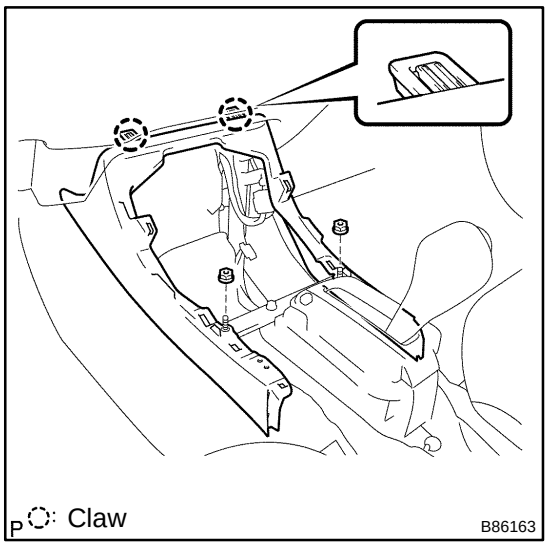

30. REMOVE CONSOLE BOX FRONT

(a) Remove the 2 nuts <M>.

(b) Disengage the 2 claws and remove the console box front.

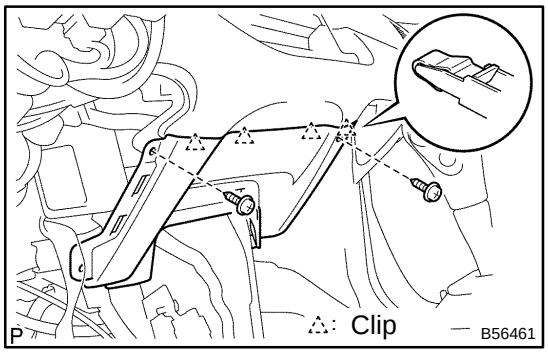

31. REMOVE INSTRUMENT PANEL FINISH PANEL LOWER CENTER

(a) TMC made:
Remove the 2 screws <K>.

(b) TMMK made:
Remove the 2 screws <H>.

(c) Disengage the 4 clips and remove the instrument panel finish panel lower center.

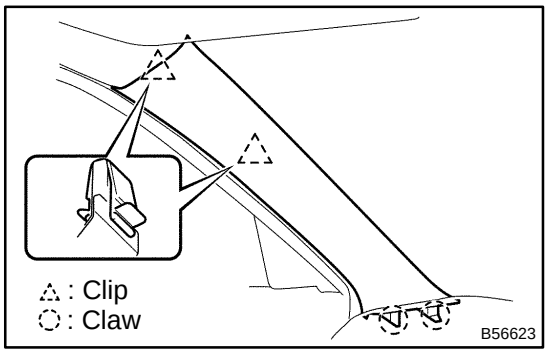

32. REMOVE FRONT PILLAR GARNISH LH (W/O CURTAIN SHIELD AIR BAG)

(a) Using a moulding remover, disengage the 2 clips and 2 claws then remove the front pillar garnish LH.

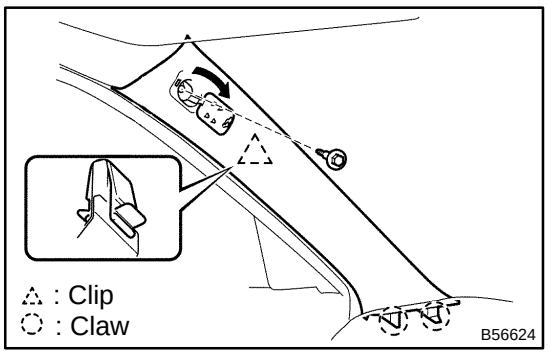

33. REMOVE FRONT PILLAR GARNISH LH (W/ CURTAIN SHIELD AIR BAG)

(a) Using a screwdriver, open the cover and remove the bolt.

HINT:

Tape the screwdriver tip before use.

(b) Using a moulding remover, disengage the clip and 2 claws then remove the front pillar garnish LH.

34. REMOVE FRONT PILLAR GARNISH RH (W/O CURTAIN SHIELD AIR BAG)

HINT:

Use the same procedures for the RH side and LH side.

35. REMOVE FRONT PILLAR GARNISH RH (W/ CURTAIN SHIELD AIR BAG)

HINT:

Use the same procedures for the RH side and LH side.

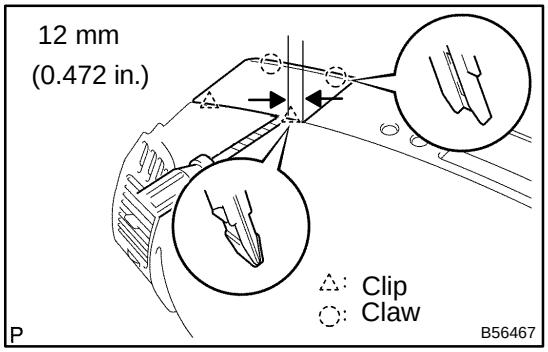

36. REMOVE INSTRUMENT PANEL SPEAKER PANEL SUB−ASSY NO.2

(a) Using a screwdriver, disengage the 2 clips and 2 claws.

HINT:

Tape the screwdriver tip before use.

(b) Remove the instrument panel speaker panel sub−assy No.2.

37. REMOVE INSTRUMENT PANEL SPEAKER PANEL SUB−ASSY

HINT:

Use the same procedures for the instrument panel speaker panel sub−assy and instrument panel speaker panel sub−assy No.2.

38. REMOVE FRONT NO.2 SPEAKER ASSY (SEE PAGE 67−9)

39. DISCONNECT PASSENGER AIRBAG CONNECTOR (SEE PAGE 60−37)

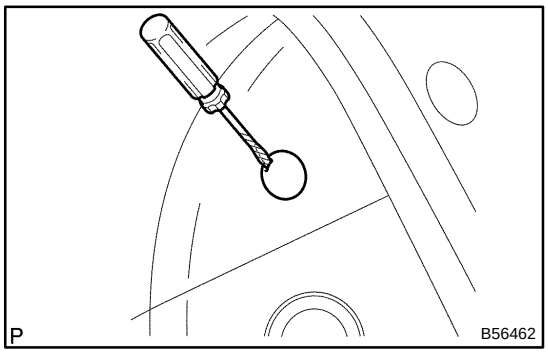

40. REMOVE INSTRUMENT PANEL SAFETY PAD CAP

(a) Using a screwdriver, remove the instrument panel safety pad cap.

HINT:

Tape the screwdriver tip before use.

41. REMOVE INSTRUMENT PANEL SAFETY PAD SUB−ASSY W/FRONT PASSENGER AIRBAG ASSY

(a) TMC made:
Remove the 2 screws <G> <I>, nut <N> and 5 bolts <A> <F>.

(b) TMMK made:
Remove the 2 screws <H> or <J> <G>, nut <M> and 4 bolts <A> <F>.

(c) Disconnect the connectors.

(d) Disengage the 5 pins and remove the instrument panel safety pad sub−assy with front passenger airbag assy.

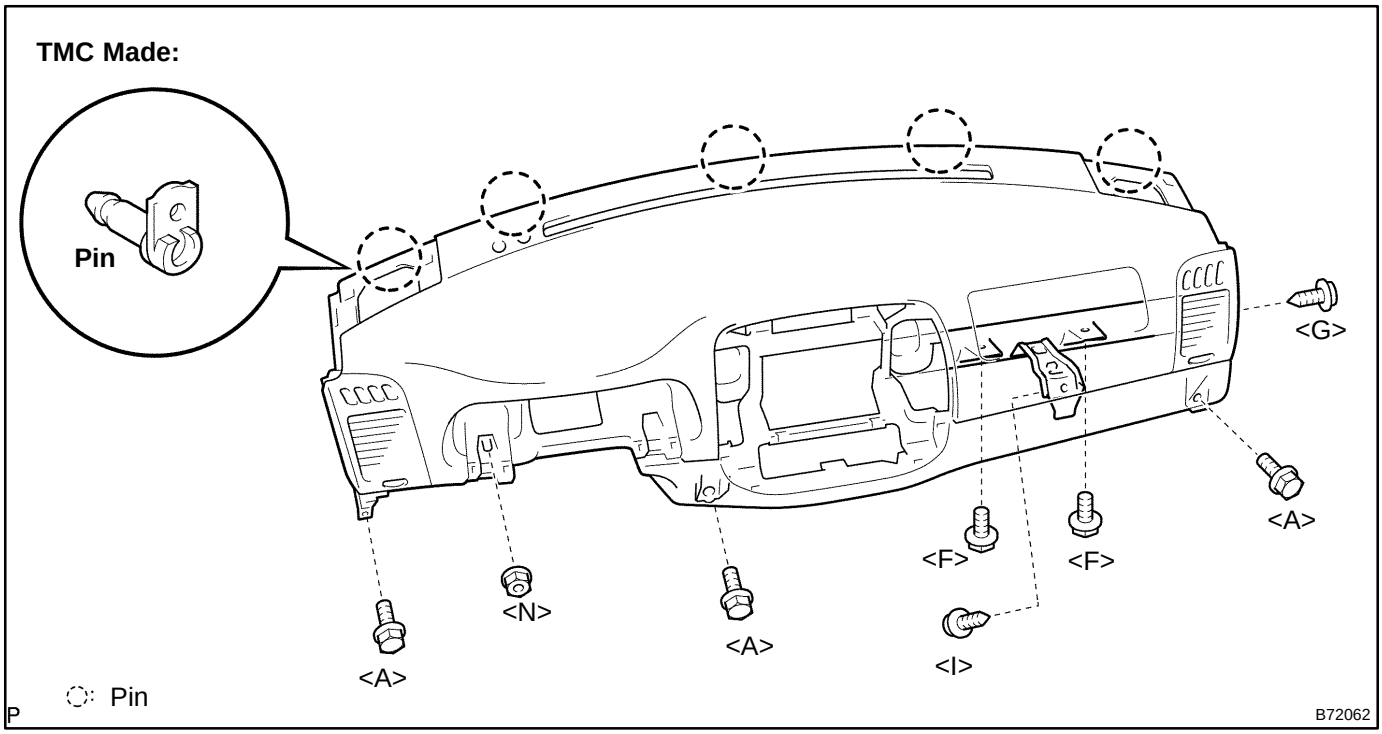

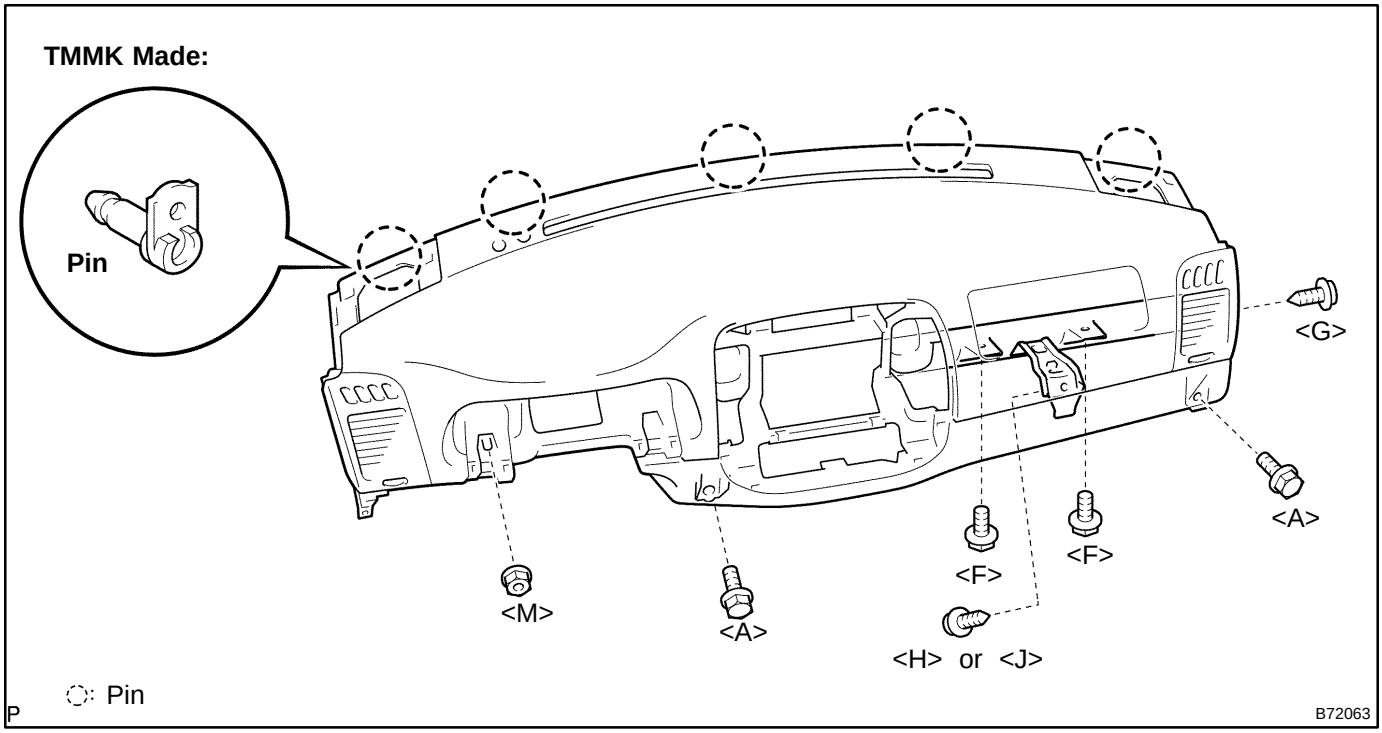

42. REMOVE INSTRUMENT PANEL REGISTER ASSY NO.2

(a) Disengage the 3 clips and 3 claws.

(b) Remove the instrument panel register assy No.2.

43. REMOVE INSTRUMENT PANEL REGISTER ASSY NO.1

(a) Disengage the 3 clips and 3 claws.

(b) Remove the instrument panel register assy No.1.

44. REMOVE GLOVE BOX LAMP ASSY

(a) Disengage the 4 claws and remove the glove box lamp assy.

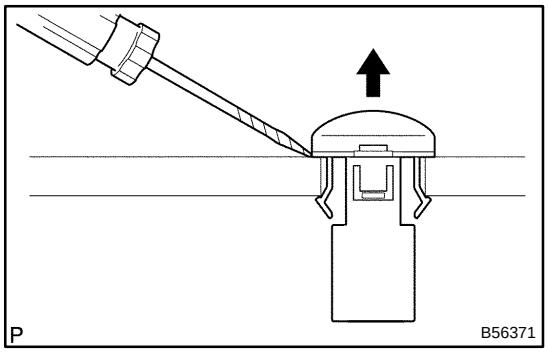

45. REMOVE AUTOMATIC LIGHT CONTROL SENSOR

(a) Using a screwdriver, remove the automatic light control sensor.

HINT:

Tape the screwdriver tip before use.

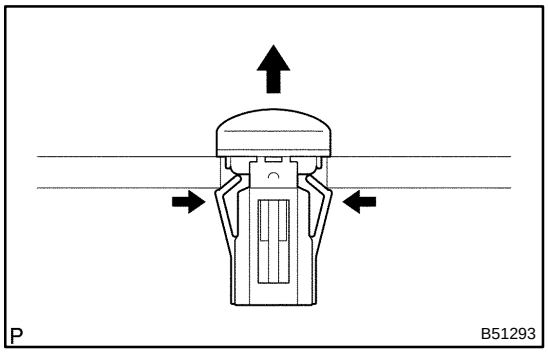

46. REMOVE COOLER (SOLAR SENSOR) THERMISTOR (AUTO AIR CONDITIONING)

(a) Remove the cooler (solar sensor) thermistor.

NOTICE:

Do not pry the cooler (solar sensor) thermistor off from the upper side.

47. REMOVE SPARE SWITCH HOLE COVER (MANUAL AIR CONDITIONING)

48. REMOVE SIDE DEFROSTER NOZZLE DUCT NO.2

(a) TMC made:
Remove the screw <I> and side defroster nozzle duct No.2.

(b) TMMK made:
Remove the screw <H> or <J> and side defroster nozzle duct No.2.

49. REMOVE SIDE DEFROSTER NOZZLE DUCT NO.1

(a) TMC made:
Remove the screw <I> and side defroster nozzle duct No.1.

(b) TMMK made:
Remove the screw <H> or <J> and side defroster nozzle duct No.1.

50. REMOVE DEFROSTER NOZZLE ASSY

(a) TMC made:
Remove the 5 screws <I> and defroster nozzle assy.

(b) TMMK made:
Remove the 5 screws <H> or <J> and defroster nozzle assy.

51. REMOVE HEATER TO REGISTER DUCT NO.1

(a) TMC made:
Remove the 2 screws <I> and heater to register duct No.1.

(b) TMMK made:
Remove the 2 screws <H> or <J> and heater to register duct No.1.

52. REMOVE HEATER TO REGISTER DUCT NO.3

(a) TMC made:
Remove the 2 screws <I> and heater to register duct No.3.

(b) TMMK made:
Remove the 2 screws <H> or <J> and heater to register duct No.3.

53. REMOVE HEATER TO REGISTER DUCT NO.2

(a) TMC made:
Remove the screw <I> and heater to register duct No.2.

(b) TMMK made:
Remove the screw <H> or <J> and heater to register duct No.2.

54. REMOVE DEFROSTER NOZZLE GARNISH NO.1

(a) Disengage the 5 clips and remove the defroster nozzle garnish No.1.

55. REMOVE INSTRUMENT PANEL PIN NO.1

(a) TMC made:
Remove the 2 screws <I> and 2 instrument panel pin No.1.

(b) TMMK made:
Remove the 2 screws <H> or <J> and 2 instrument panel pin No.1.

56. REMOVE FRONT PASSENGER AIRBAG ASSY (SEE PAGE 60−37)

57. INSTALL FRONT PASSENGER AIRBAG ASSY (SEE PAGE 60−37)

58. INSTALL INSTRUMENT PANEL SAFETY PAD SUB−ASSY W/FRONT PASSENGER AIRBAG ASSY

(a) Engage the 5 pins.

(b) Connect the connectors.

(c) TMC made:
Install the instrument panel safety pad sub−assy w/ front passenger aibag assy with the 2 screws <G> <I>, nut <N>, and 5 bolts <A> <F>.
Torque:
Bolt <F> : 20 N·m (204 kgf·cm, 15 ft·lbf)

(d) TMMK made:
Install the instrument panel safety pad sub−assy w/ front passenger airbag assy with the 2 screws <H> or <J> <G>, nut <M>, and 4 bolts <A> <F>.
Torque :
Bolt <F>: 20 N·m (204 kgf·cm, 15 ft·lbf)

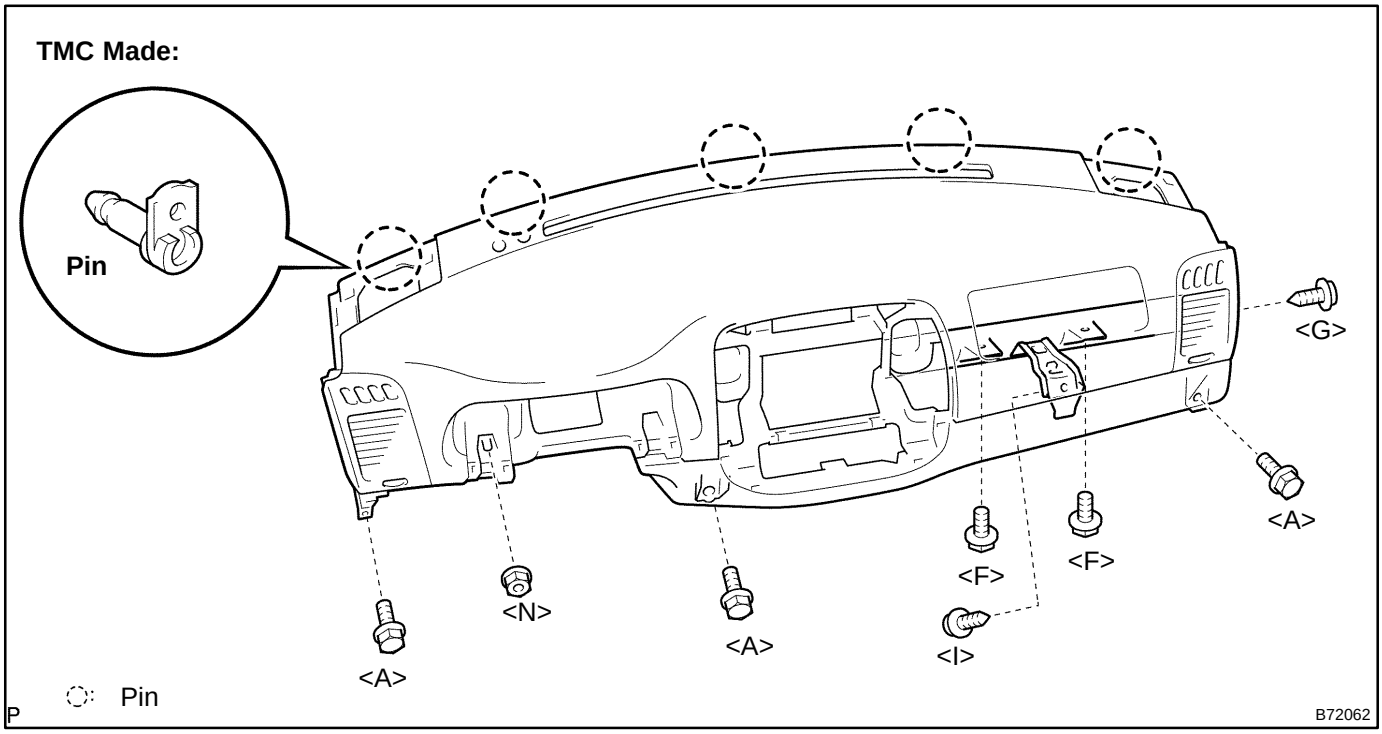

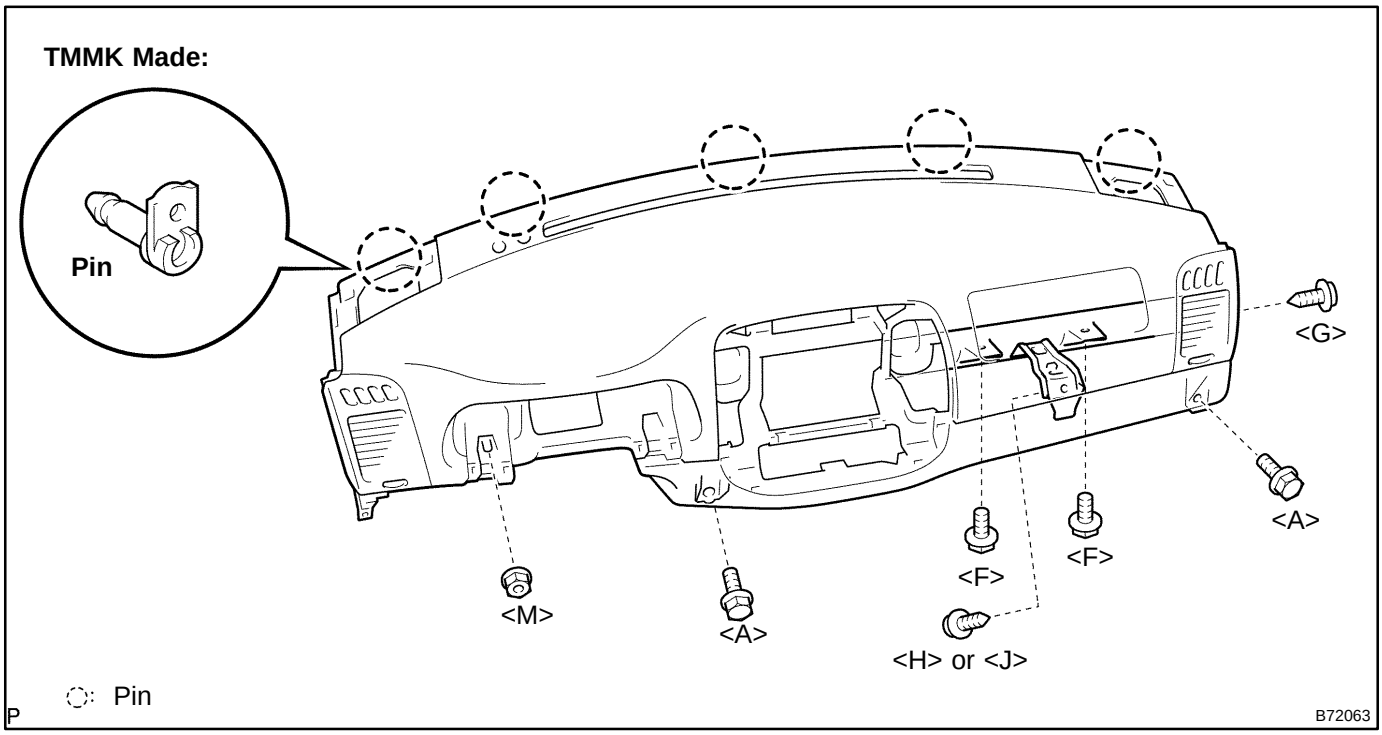

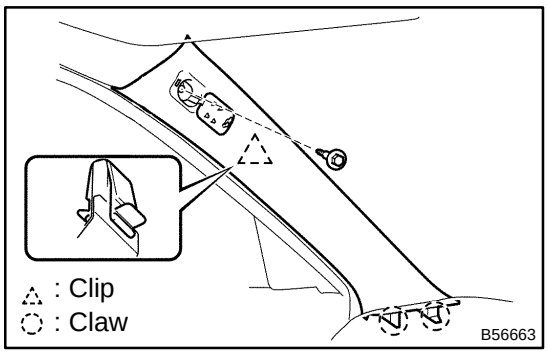

59. INSTALL FRONT PILLAR GARNISH LH (W/ CURTAIN SHIELD AIR BAG)

(a) Engage the 2 claws and clip.

(b) Install the front pillar garnish with the bolt.

Torque:
7.5 to 20 N·m (77 to 204 kgf·cm, 67 in.·lbf to 14 ft·lbf)

60. INSTALL FRONT PILLAR GARNISH RH (W/ CURTAIN SHIELD AIR BAG)

HINT:

Use the same procedures for the RH side and LH side.

61. CENTER SPIRAL CABLE (SEE PAGE 60−34)

62. INSTALL STEERING WHEEL ASSY (SEE PAGE 50−9 or 50−21)

63. INSTALL HORN BUTTON ASSY (SEE PAGE 60−25)

64. INSPECT HORN BUTTON ASSY (SEE PAGE 60−17)

65. INSPECT SRS WARNING LIGHT (SEE PAGE 05−1456)

COMBINATION METER ASSY

7105J−03

OVERHAUL

HINT:

- COMPONENTS: See page 71−9.
- Installation is in the reverse order of removal.

1. REMOVE INSTRUMENT CLUSTER FINISH PANEL (SEE PAGE 71−16)

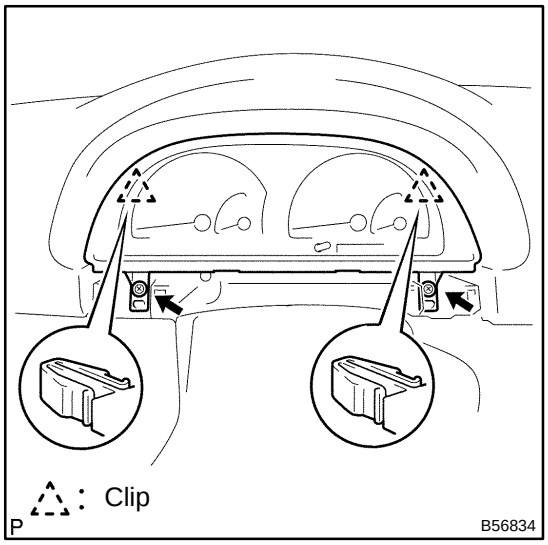

2. REMOVE COMBINATION METER ASSY

(a) Remove the 2 screws and disengage the 2 clips.

(b) Disconnect the connectors and remove the combination meter assy.

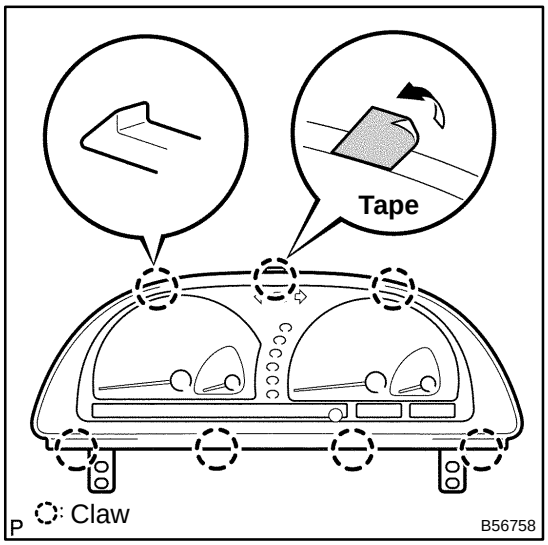

3. REMOVE COMBINATION METER GLASS

(a) Reverse the combination meter and remove the 2 screws.

(b) Remove the tape.

(c) Disengage the 7 claws and remove the combination meter glass.

CLOCK ASSY

REPLACEMENT

7105K−03

HINT:

- COMPONENTS: See page 71−9.
- Installation is in the reverse order of removal.

1. REMOVE AIR CONDITIONER CONTROL ASSEMBLY (AUTO AIR CONDITIONING) (SEE PAGE 71−16)

2. REMOVE AIR CONDITIONING PANEL SUB−ASSY (MANUAL AIR CONDITIONING) (SEE PAGE 71−16)

3. REMOVE INSTRUMENT CLUSTER FINISH PANEL SUB−ASSY CENTER (SEE PAGE 71−16)

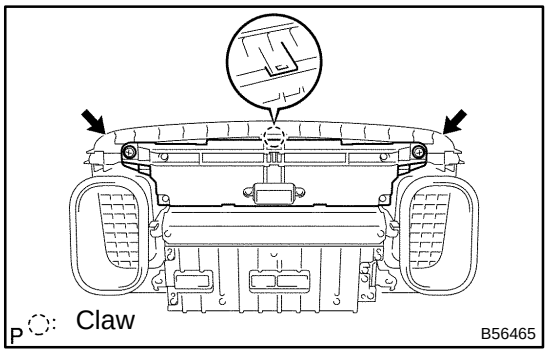

4. REMOVE CLOCK ASSY

(a) Remove the 2 screws.

(b) Disengage the claw and remove the clock assy.

FRONT POWER SEAT CONTROL SYSTEM (From July, 2003)

720O1–01

LOCATION

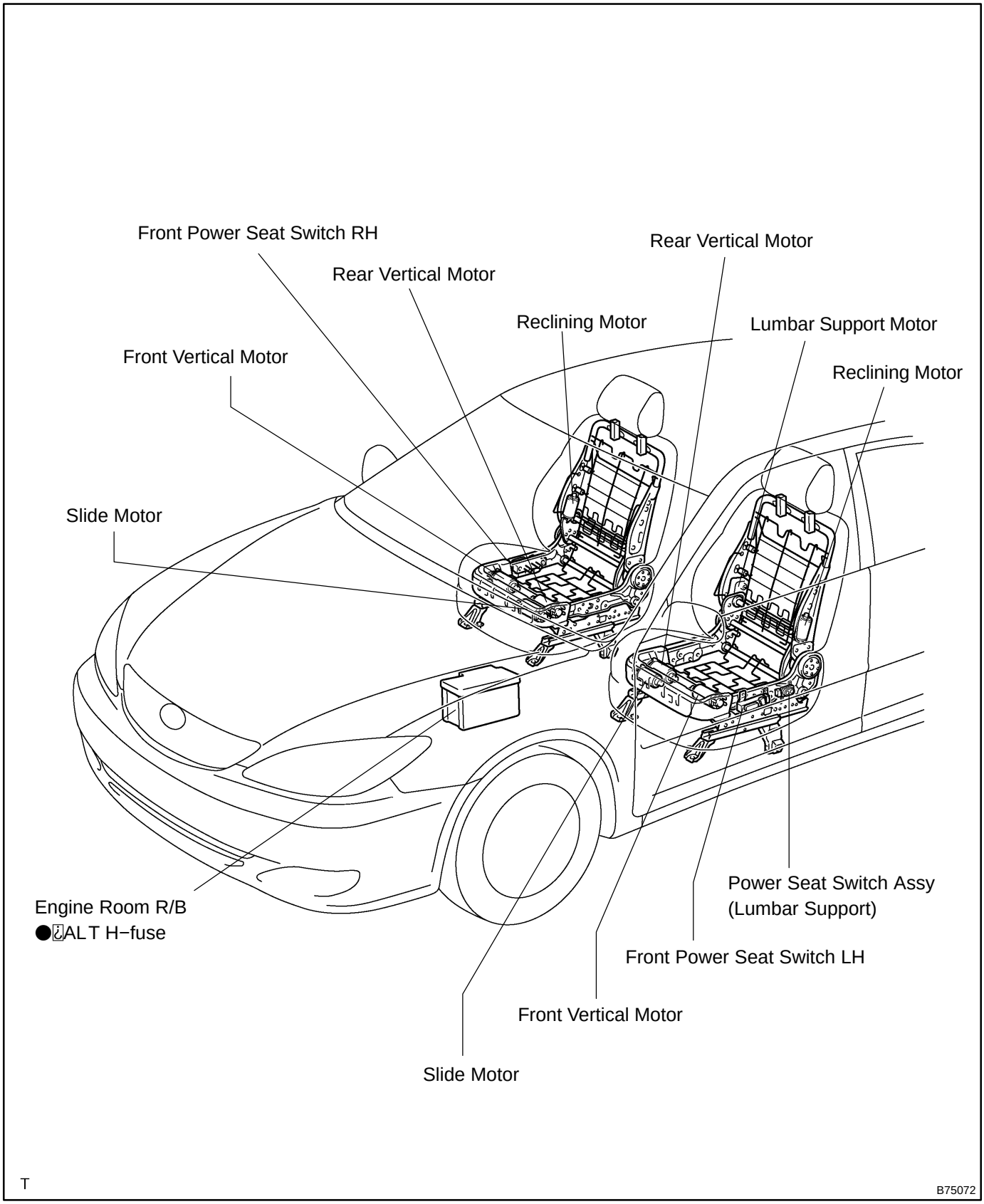

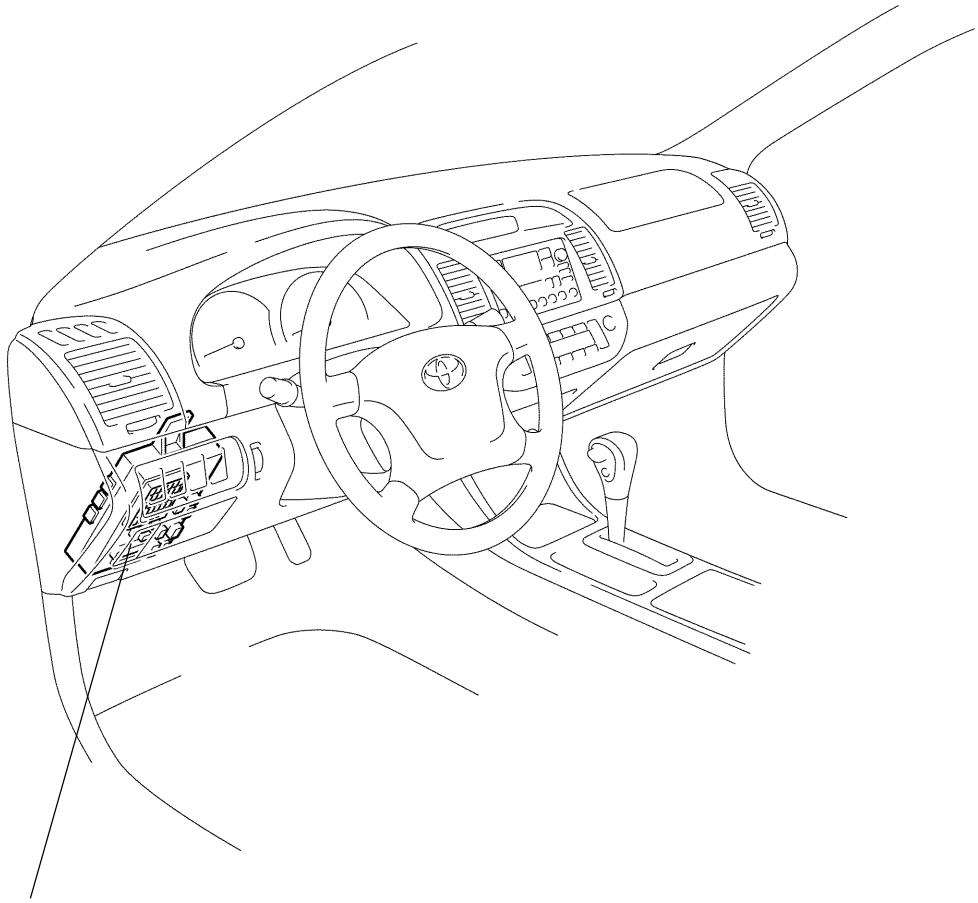

Instrument Panel J/B Assy
●PWR SEAT M−fuse

P

B75065

720O2–01

PROBLEM SYMPTOMS TABLE

Symptom	Suspected Area	See Page
All power seat functions do not operate	1. P/SEAT M–fuse 2. Front power seat switch 3. Wire harness	72–1 72–6 –
Only slide operation function does not operate	1. Front power seat switch 2. Slide motor 3. Wire harness	72–6 72–6 –
Only front vertical operation function does not operate	1. Front power seat switch 2. Front vertical motor 3. Wire harness	72–6 72–6 –
Only rear vertical operation function does not operate	1. Front power seat switch 2. rear vertical motor 3. Wire harness	72–6 72–6 –
Only reclining operation function does not operate	1. Front power seat switch 2. Reclining motor 3. Wire harness	72–6 72–6 –
Only lumbar support operation function does not operate (driver's seat only)	1. Power seat switch assy (Lumbar support) 2. Lumbar support adjuster motor 3. Wire harness	72–6 72–6 –

720O4−01

ON−VEHICLE INSPECTION

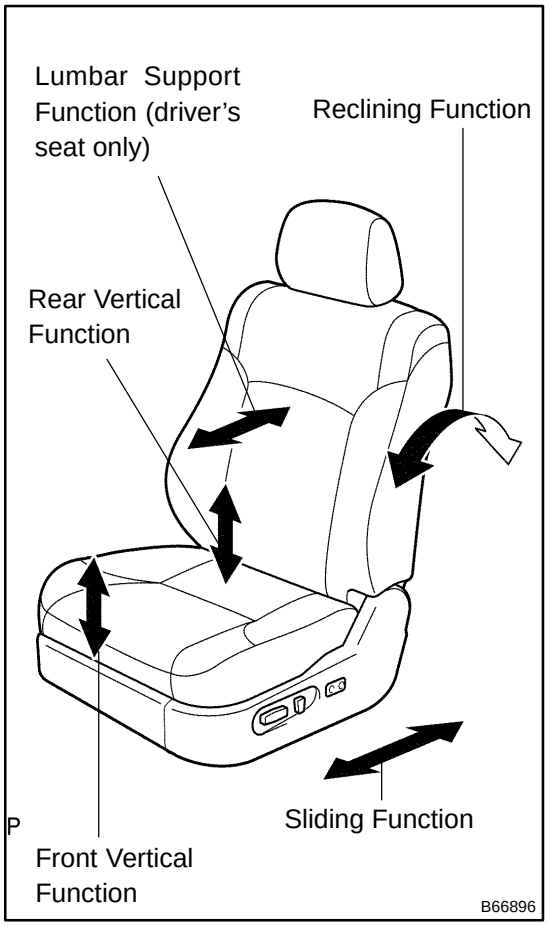

1. CHECK POWER SEAT FUNCTION

(a) Check the basic functions.

(1) Operate the power seat switches and check to make sure each seat function works:

- Sliding
- Front vertical
- Rear vertical
- Reclining
- Lumbar support (driver's seat only)

2. CHECK POWER SEAT MOTOR ASSY (SLIDING, FRONT VERTICAL, REAR VERTICAL AND RECLINING FUNCTIONS)

(a) Check the PTC operation inside the power seat motor.

HINT:

The PTC thermistor's resistance increases when the power seat switch is held down even after the power seat has been moved to the maximum in one direction. after the resistance increases, current is shut off to prevent a short circuit.

NOTICE:

Perform steps (1) to (4) for the full range of motion for each power seat function.

(1) Choose a power seat function. Operate the power seat switch and move the seat to the maximum in one direction. Keep the seat in that position for approximately 60 seconds.

(2) Operate the power seat switch again and continue to try to move the seat in the same direction as in step (1). Measure the amount of time elapsed before the electrical current is automatically cut. Check if electrical current has shut off by making sure the sound of the motor has stopped.

Standard: 4 to 90 seconds

(3) After the current has stopped, release the power seat switch and wait for approximately 60 seconds.

(4) Operate the same power seat switch and move the seat to the opposite extreme of the direction in step (1). Check that the motor operates.

(5) Repeat steps (1) to (4) for the remaining power seat functions.

3. Driver's seat only:

CHECK LUMBAR SUPPORT ADJUSTER ASSY LH

(a) Check the PTC operation inside the power seat motor.

NOTICE:

The inspection should be performed with the seat installed in the vehicle.

(1) Operate the lumbar support switch and move the lumbar support to either the foremost or rearmost position. Keep the seat in that position for approximately 60 seconds.

(2) Operate the lumbar support switch again and continue to try to move the lumbar support in the same direction as in step (1). Measure the amount of time elapsed before the electrical current is automatically cut. Check if electrical current has shut off by making sure the sound of the motor has stopped.

Standard: 4 to 90 seconds

(3) After the current has stopped, release the lumbar support switch and wait for approximately 60 seconds.

(4) Operate the lumbar support switch and move the seat to the opposite extreme of the direction in step (1). Check that the motor operates.

720O3−01

INSPECTION

Driver's Seat:
Front Power Seat Switch

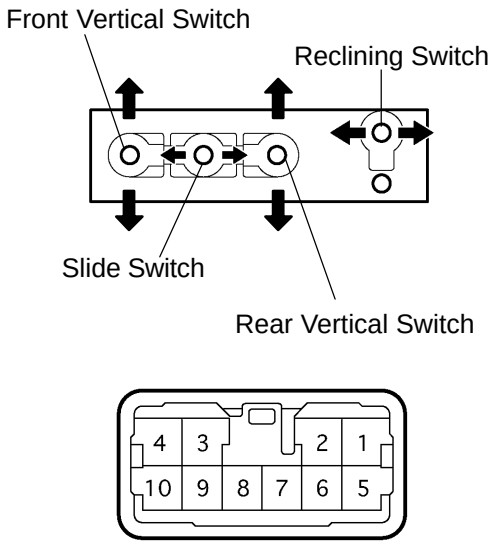

B60011

1. Driver's seat:
INSPECT FRONT POWER SEAT SWITCH

(a) Check the resistance between the terminals when each switch is operated.

Standard:

Slide switch

Tester Connection	Switch Condition	Specified Condition
1 − 9	FRONT	Below 1 Ω
4 − 6	FRONT	Below 1 Ω
4 − 6	OFF	Below 1 Ω
4 − 9	OFF	Below 1 Ω
1 − 6	REAR	Below 1 Ω
4 − 9	REAR	Below 1 Ω

Front vertical switch

Tester Connection	Switch Condition	Specified Condition
1 − 10	UP	Below 1 Ω
4 − 5	UP	Below 1 Ω
4 − 5	OFF	Below 1 Ω
4 − 10	OFF	Below 1 Ω
1 − 5	DOWN	Below 1 Ω
4 − 10	DOWN	Below 1 Ω

Rear vertical switch

Tester Connection	Switch Condition	Specified Condition
1 − 7	UP	Below 1 Ω
4 − 8	UP	Below 1 Ω
4 − 7	OFF	Below 1 Ω
4 − 8	OFF	Below 1 Ω
1 − 8	DOWN	Below 1 Ω
4 − 7	DOWN	Below 1 Ω

Reclining switch

Tester Connection	Switch Condition	Specified Condition
1 − 3	FRONT	Below 1 Ω
2 − 4	FRONT	Below 1 Ω
2 − 4	OFF	Below 1 Ω
3 − 4	OFF	Below 1 Ω
1 − 2	REAR	Below 1 Ω
3 − 4	REAR	Below 1 Ω

If the result is not as specified, replace the switch.

Passenger's Seat:
Front Power Seat Switch

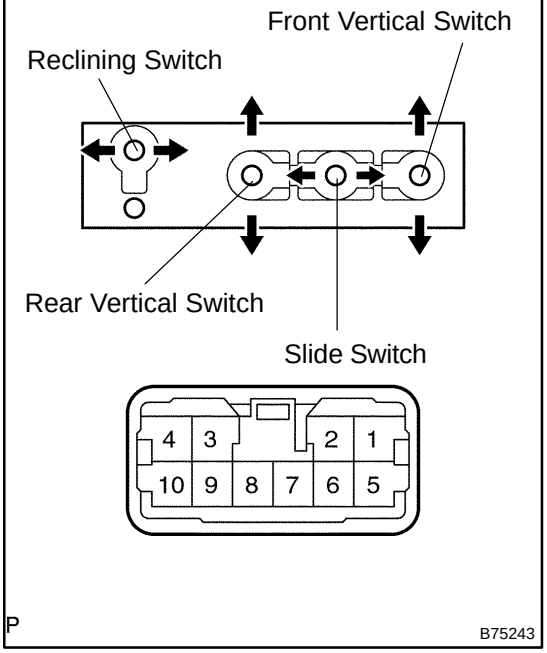

2. Passenger's seat:
INSPECT FRONT POWER SEAT SWITCH

(a) Check the resistance between the terminals when each switch is operated.

Standard:

Slide switch

Tester Connection	Switch Condition	Specified Condition
1 – 9	FRONT	Below 1 Ω
4 – 6	FRONT	Below 1 Ω
4 – 6	OFF	Below 1 Ω
4 – 9	OFF	Below 1 Ω
1 – 6	REAR	Below 1 Ω
4 – 9	REAR	Below 1 Ω

Front vertical switch

Tester Connection	Switch Condition	Specified Condition
1 – 5	UP	Below 1 Ω
4 – 10	UP	Below 1 Ω
4 – 5	OFF	Below 1 Ω
4 – 10	OFF	Below 1 Ω
1 – 10	DOWN	Below 1 Ω
4 – 5	DOWN	Below 1 Ω

Rear vertical switch

Tester Connection	Switch Condition	Specified Condition
4 – 7	UP	Below 1 Ω
1 – 8	UP	Below 1 Ω
4 – 7	OFF	Below 1 Ω
4 – 8	OFF	Below 1 Ω
4 – 8	DOWN	Below 1 Ω
1 – 7	DOWN	Below 1 Ω

Reclining switch

Tester Connection	Switch Condition	Specified Condition
1 – 3	FRONT	Below 1 Ω
2 – 4	FRONT	Below 1 Ω
2 – 4	OFF	Below 1 Ω
3 – 4	OFF	Below 1 Ω
1 –2	REAR	Below 1 Ω
3 – 4	REAR	Below 1 Ω

If the result is not as specified, replace the switch.

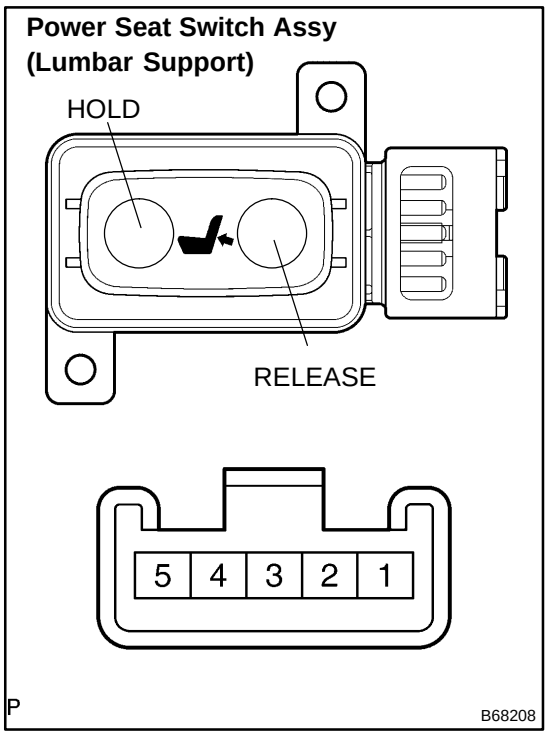

3. INSPECT POWER SEAT SWITCH ASSY(LUMBAR SUPPORT)

(a) Driver's seat only:

Check the resistance between the terminals when the switch is operated.

Standard:

Tester Connection	Switch Condition	Specified Condition
1 − 2	HOLD	Below 1 Ω
3 − 4	HOLD	Below 1 Ω
1 − 2	OFF	Below 1 Ω
4 − 5	OFF	Below 1 Ω
1 − 3	RELEASE	Below 1 Ω
4 − 5	RELEASE	Below 1 Ω

If the result is not as specified, replace the switch assy.

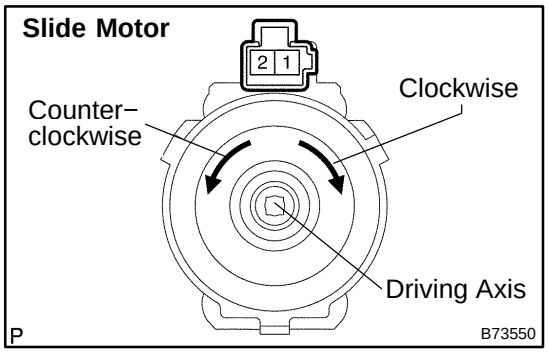

4. INSPECT FRONT SEAT ADJUSTER ASSY

(a) Check operation of the slide motor.

(1) Check if the motor rotates smoothly when the battery is connected to the slide motor connector terminals.

Standard:

Measurement Condition	Operational Direction
Battery positive (+) → 2 Battery negative (−) → 1	Clockwise
Battery positive (+) → 1 Battery negative (−) → 2	Counterclockwise

If the result is not as specified, replace the slide motor.

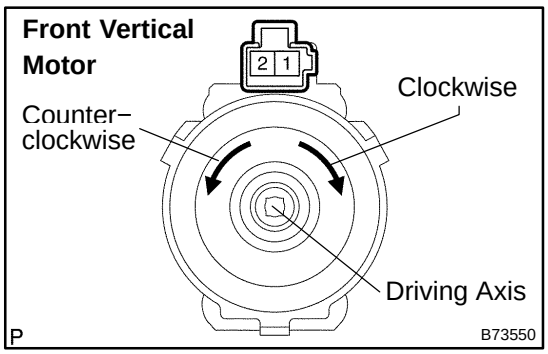

(b) Check operation of the vertical motor.

(1) Check if the motor rotates smoothly when the battery is connected to the vertical motor connector terminals.

Standard:

Measurement Condition	Operational Direction
Battery positive (+) → 2 Battery negative (−) → 1	Clockwise
Battery positive (+) → 1 Battery negative (−) → 2	Counterclockwise

If the result is not as specified, replace the vertical motor.

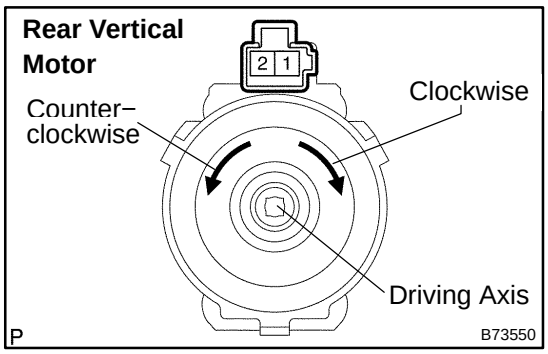

(c) Check operation of the rear vertical motor.

(1) Check if the motor rotates smoothly when the battery is connected to the rear vertical motor connector terminals.

Standard:

Measurement Condition	Operational Direction
Battery positive (+) → 2 Battery negative (−) → 1	Clockwise
Battery positive (+) → 1 Battery negative (−) → 2	Counterclockwise

If the result is not as specified, replace the rear vertical motor.

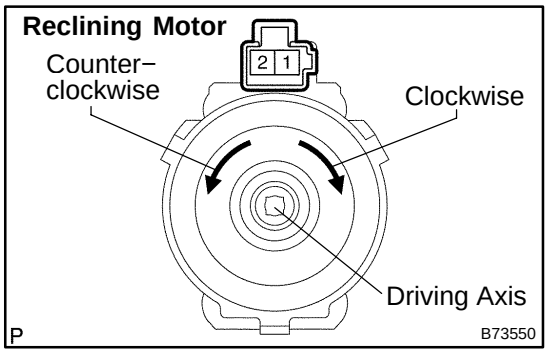

(d) Check operation of the reclining motor.

(1) Check if the motor rotates smoothly when the battery is connected to the reclining motor connector terminals.

Standard:

Measurement Condition	Operational Direction
Battery positive (+) → 2 Battery negative (−) → 1	Clockwise
Battery positive (+) → 1 Battery negative (−) → 2	Counterclockwise

If the result is not as specified, replace the lifter motor.

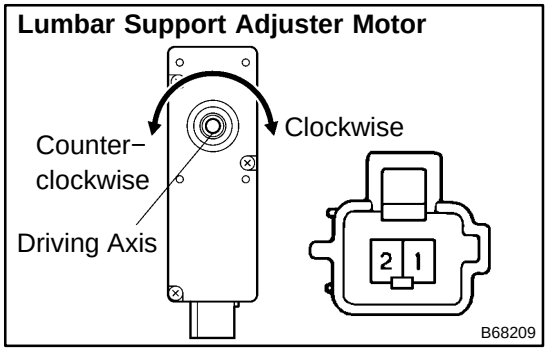

5. INSPECT LUMBAR SUPPORT ADJUSTER ASSY LH

(a) Driver'seat only:

Check operation of the lumbar support adjuster motor.

(1) Check if the motor rotates smoothly when the battery is connected to the lumbar support adjuster motor connector terminals.

Measurement Condition	Operational Direction
Battery positive (+) → 1 Battery negative (−) → 2	Clockwise
Battery positive (+) → 2 Battery negative (−) → 1	Counterclockwise

If the result is not as specified, replace the adjuster motor.

SEAT HEATER SYSTEM

720PQ−01

LOCATION

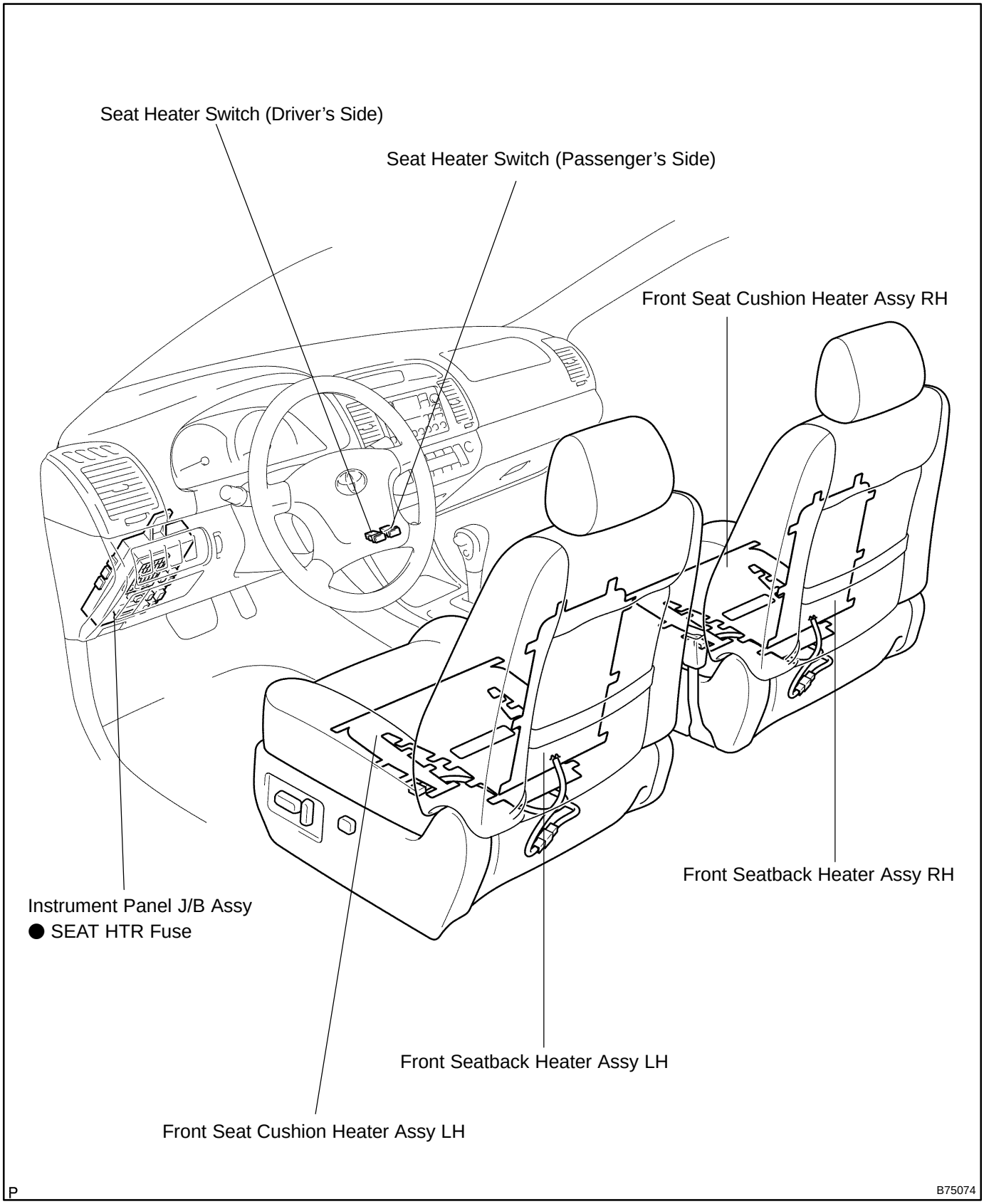

7206V−04

PROBLEM SYMPTOMS TABLE

Symptom	Suspected Area	See page
Seat heaters do not operate	1. SEAT HTR fuse	72−10
	2. Front seat cushion heater assy LH	72−12
	3. Front seat cushion heater assy RH	72−12
	4. Front seatback heater assy LH	72−12
	5. Front seatback heater assy RH	72−12
	6. Seat heater switch	72−12
	7. Wire harness	−

7206X−04

INSPECTION

HINT:

- On the RH side, use in the same procedure as on the LH side.

Seat Heat Switch (Driver's Side)

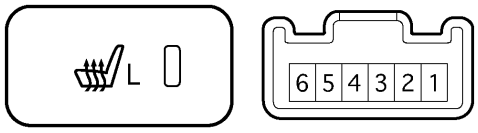

O B51466

1. INSPECT SEAT HEATER SWITCH

(a) Inspect the seat heater switch (driver's side) continuity.

Standard:

Terminal No.	Condition	Specified condition
4 ⇔ 6	OFF	Continuity
3 ⇔ 4 ⇔ 6	ON	Continuity
1 ⇔ 2	Illumination	Continuity (always)

If the continuity is not as specified, replace the seat heater switch.

Seat Heat Switch (Passenger's Side)

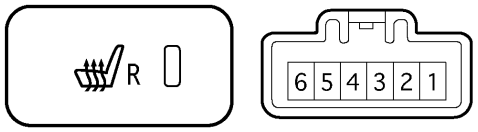

O B51467

(b) Inspect the seat heater switch (passenger's side) continuity.

Standard:

Terminal No.	Condition	Specified condition
4 ⇔ 6	OFF	Continuity
3 ⇔ 4 ⇔ 6	ON	Continuity
1 ⇔ 2	Illumination	Continuity (always)

If the continuity is not as specified, replace the seat heater switch.

Front Seat Cushion Hater

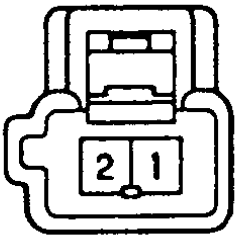

B30883

2. INSPECT FRONT SEAT CUSHION HEATER ASSY LH

(a) Inspect the seat cushion heater assembly LH continuity.

Standard:

Terminal No.	Condition	Specified condition
1 ⇔ 2	Constant	Continuity

If the continuity is not as specified, replace the seat cushion heater assembly.

Front Seat back Hater

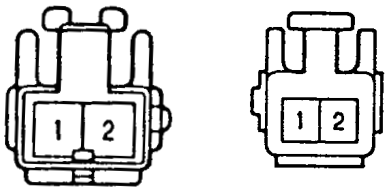

B51473

3. INSPECT FRONT SEAT BACK HEATER ASSY LH

(a) Inspect the seat back heater assembly LH continuity.

Standard:

Terminal No.	Condition	Specified condition
1 ⇔ 2	Constant	Continuity

If the continuity is not as specified, replace the seat back heater assembly.

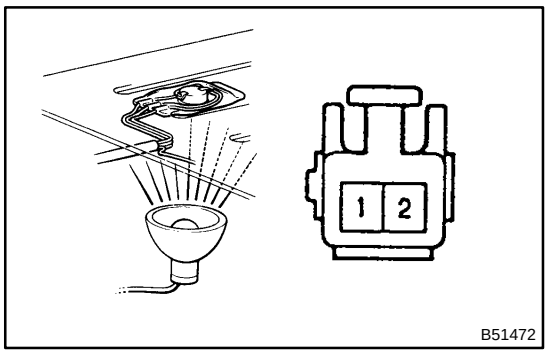

(b) Inspect the seat cushion thermostat continuity.
(1) Disconnect the seat back heater from the seat cushion heater LH.
(2) Heat up the thermostat LH with a heat light.
(3) Inspect the seat cushion heater continuity between the terminals.

Standard:

Terminal No.	Condition	Specified condition
1 ⇔ 2	Seat heater temp. below 25 − 35 C (77 − 95 F)	Continuity
	Seat heater temp. 25 − 35 C (77 − 95 F)	No continuity

If the continuity is not as specified, replace the seat heater cushion heater assembly.

4. INSPECT FRONT SEAT CUSHION HEATER ASSY RH

5. INSPECT FRONT SEAT BACK HEATER ASSY RH

FRONT SEAT ASSEMBLY (MANUAL SEAT TYPE)

720O7−02

COMPONENTS

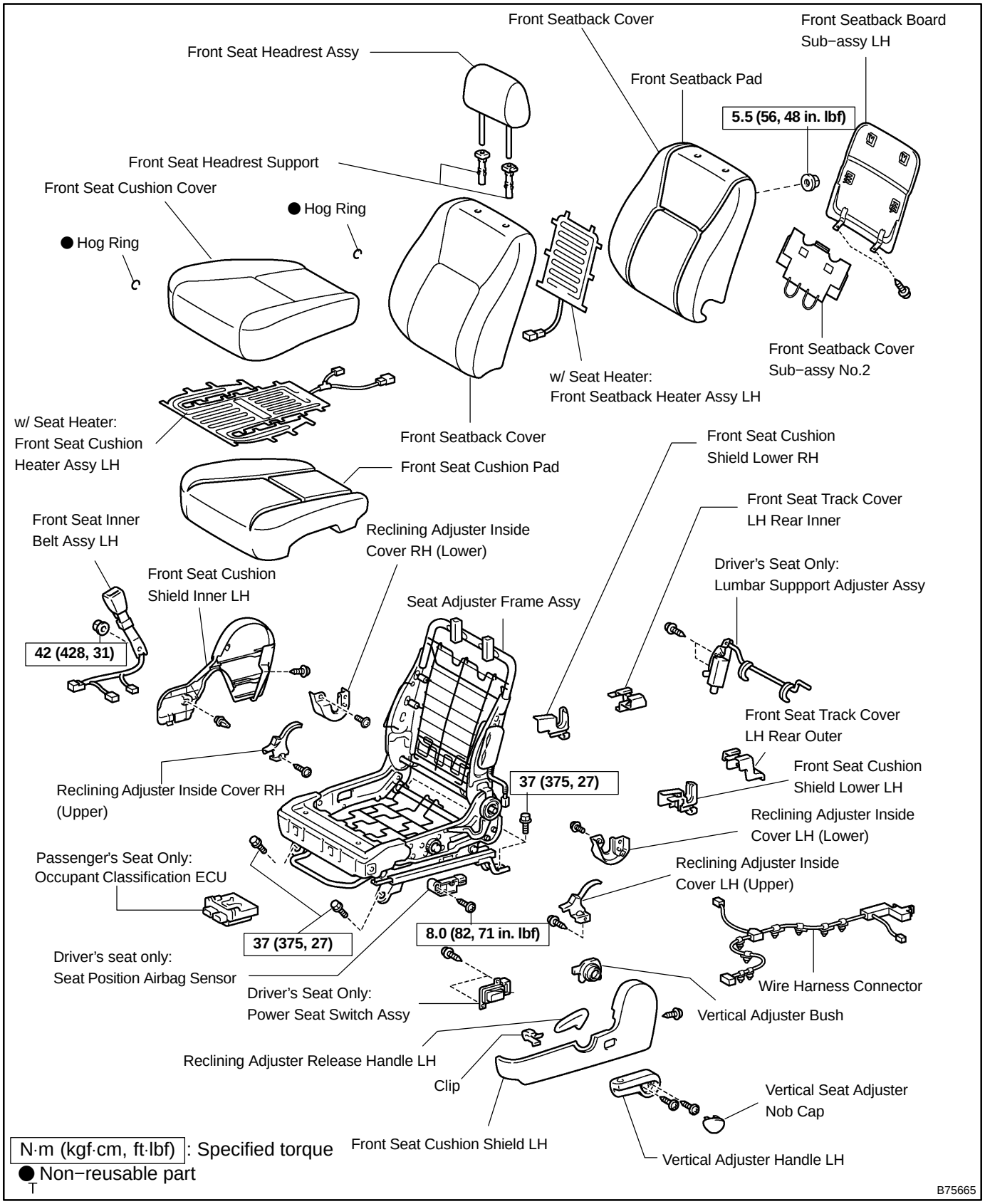

720O8−02

OVERHAUL

CAUTION:

- **Wear safety gloves, because the sharp surfaces of the seatback frame and seat adjuster may injure your hand.**
- **Work must be started more than 90 seconds after the ignition switch is turned to the LOCK position and the negative (−) terminal cable is disconnected from the battery.**
  (The SRS is equipped with a back−up power source. If work is started within 90 seconds from disconnecting the negative (−) terminal cable of the battery, the SRS may deploy.)

HINT:

- The installation procedures are the removal procedures in reverse order. However, only installation procedures requiring additional information are included.
- When removing/installing and overhauling the passenger seat, check the passenger occupant classification system and perform the zero point calibration (see page 05−1452).
- Use the same procedures for the RH side and LH side.
- A bolt without a torque specification is shown in the standard bolt chart (see page 03−2).

1. REMOVE FRONT SEAT TRACK COVER LH REAR OUTER

2. REMOVE FRONT SEAT TRACK COVER LH REAR INNER

3. REMOVE FRONT SEAT ASSY LH

HINT:

Set the front vertical function to the highest position.

(a) Remove the headrest.

(b) Disconnect the connectors under the seat.

(c) Remove the 4 bolts and seat.

NOTICE:

Be careful not to damage the body.

4. Passenger's seat only:
REMOVE OCCUPANT CLASSIFICATION ECU (See page 60−72)

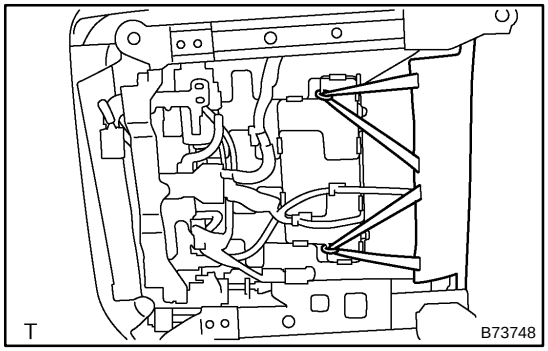

5. REMOVE VERTICAL ADJUSTER HANDLE LH

(a) Remove the 2 front seatback cover No. 2 hog rings under the seat.

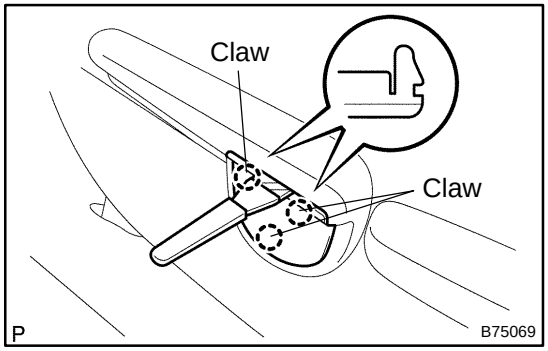

(b) Using a scraper, disengage the 3 claws and remove the vertical seat adjuster nob cap.

HINT:

Tape the scraper tip before use.

(c) Remove the 2 screws and vertical adjuster handle.

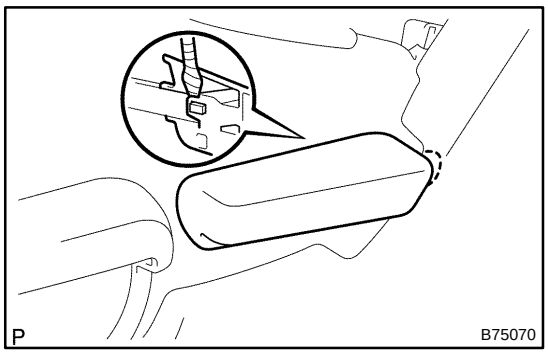

6. REMOVE RECLINING POWER SEAT SWITCH KNOB

(a) Using a screwdriver, pry out the reclining adjuster release handle.

HINT:

Tape the screwdriver tip before use.

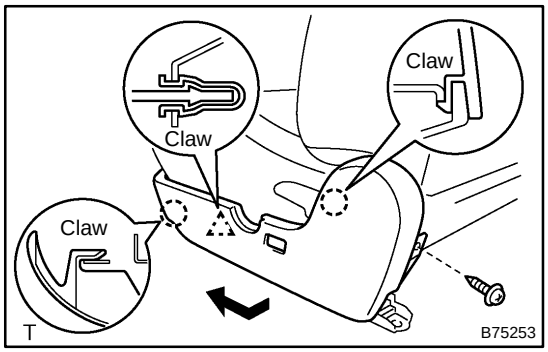

7. REMOVE FRONT SEAT CUSHION SHIELD LH

(a) Remove the screw.

(b) Using a screwdriver, disengage the 2 claws and clip, and remove the cushion shield.

HINT:

Tape the screwdriver tip before use.

8. REMOVE FRONT SEAT INNER BELT ASSY LH

(a) Disconnect the connectors.

(b) Remove the nut and inner belt.

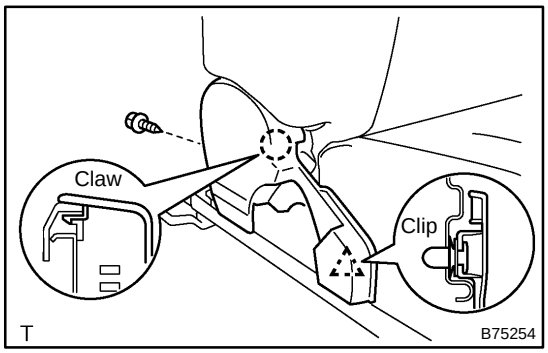

9. REMOVE FRONT SEAT CUSHION SHIELD INNER LH

(a) Remove the screw.

(b) Using a screwdriver, disengage the claw and clip, and remove the cushion shield.

HINT:

Tape the screwdriver tip before use.

10. REMOVE FRONT SEAT CUSHION COVER

(a) w/ Seat heater:
Disconnect the seat connectors.

(b) Disengage the hook and remove the seat cushion cover together with the pad.

(c) Remove the hog rings and seat cushion cover.

11. w/ Seat heater:
REMOVE FRONT SEAT CUSHION HEATER ASSY LH

(a) Cut off the tack pins which fasten the seat heater, and then remove the front seat heater from the seat cushion cover.

NOTICE:

Be careful not to damage the seat cushion cover.

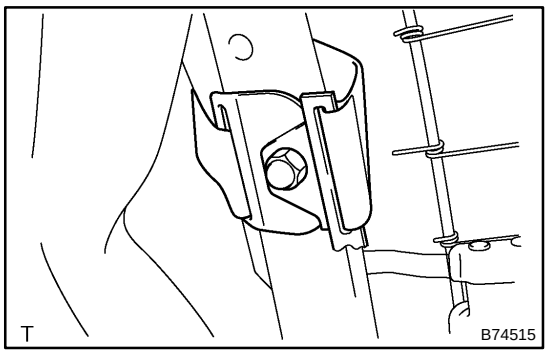

12. REMOVE FRONT SEATBACK COVER

(a) Remove the 2 screws and seatback board.

(b) Disengage the hook and remove the front seatback cover No. 2.

(c) w/ Side airbag:
Remove the hog rings, nut and seatback cover bracket.

(d) Remove the 2 headrest supports.

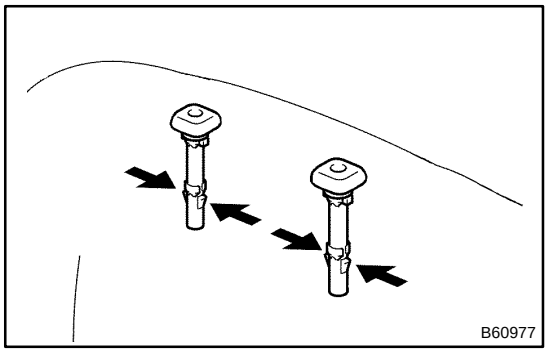

(e) Remove the hog rings and seatback cover together with the pad.

(f) Remove the hog rings and seatback cover.

13. w/ Seat heater:
REMOVE FRONT SEATBACK HEATER ASSY LH

(a) Cut off the tack pins which fasten the seat heater, and then remove the front seat heater from the seatback cover.

NOTICE:

Be careful not to damage the seatback cover.

14. REMOVE FRONT SEAT ADJUSTER SUB−ASSY LH

(a) Remove the 2 screws and lumbar support adjuster.

(b) Remove the wire harness connector.

(c) Remove the screw and reclining adjuster inside covers LH (upper).

(d) Remove the screw and reclining adjuster inside covers RH (upper).

(e) Remove the screw and reclining adjuster inside covers LH (lower).

(f) Remove the screw and reclining adjuster inside covers RH (lower).

(g) Remove the screw and front cushion shield lower LH.

(h) Remove the screw and front cushion shield lower RH.

15. Driver's seat only:
REMOVE SEAT POSITION AIRBAG SENSOR

(a) Disconnect the wire harness connector.

(b) Using a torx socket wrench (T30), remove the torx bolt and airbag sensor.

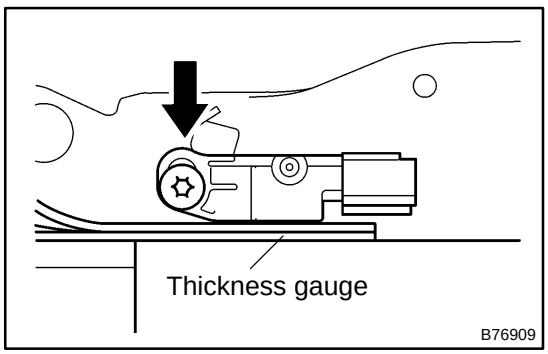

16. Driver's seat only:
INSTALL SEAT POSITION AIRBAG SENSOR

(a) Temporarily install the seat position airbag sensor.

(b) Install a 1 mm thickness gauge between the slide rail and sensor as shown in the illustration.

NOTICE:

- **If the seat position airbag sensor has been dropped, or there are any cracks, dents or other defects in the case, bracket or connector, replace the seat position airbag sensor with a new one.**

- **When installing the seat position airbag sensor, be careful that the SRS wiring does not interfere with other parts and is not pinched between other parts.**

HINT:

Be sure to maintain a clearance between the seat position airbag sensor and the seat rail is within 0.6 mm (0.023 in.) to 2 mm (0.079 in.).

(c) Push the top of the sensor. While holding the sensor, tighten the sensor using a torx socket wrench (T30).
Torque: 8.0 N·m (82 kgf·cm, 71 in.·lbf)

(d) Connect the wire harness connector.

17. w/ Seat heater:
INSTALL FRONT SEATBACK HEATER ASSY LH

(a) Set the seat heater to the seatback cover.

(b) Install the front seat heater to the seatback cover with the 8 tack pins.

NOTICE:

Do not substitute other metal parts for tack pins.

a − a:

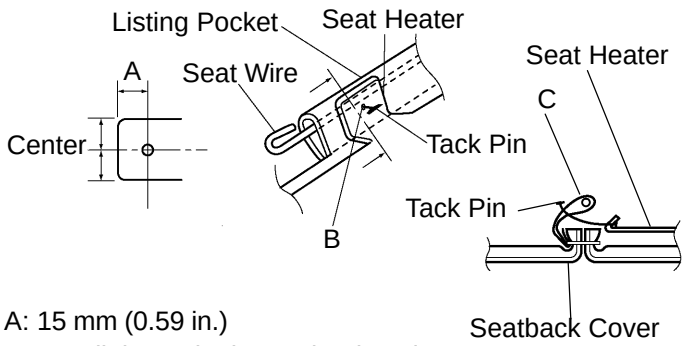

A: 15 mm (0.59 in.)
B: Install the tack pins under the wire.
C: Align the seat heater and the end of listing pocket.

b − b:

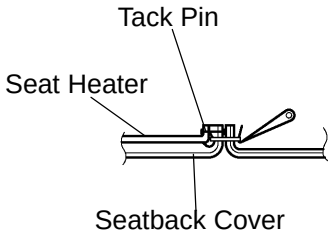

Tack pins should not be beyond the seat.

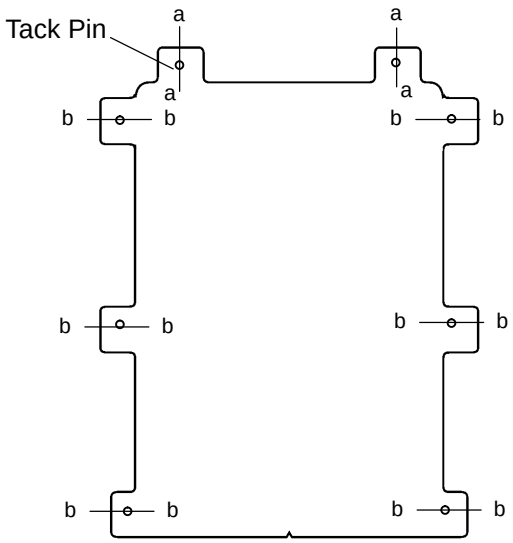

B57684

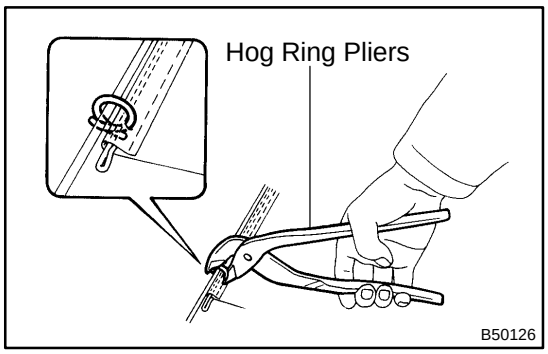

18. INSTALL FRONT SEATBACK COVER

(a) Install the seatback pad.

(b) Cover the top of the seatback pad with the seatback cover.

(c) Install the 2 headrest supports.

(d) Using hog ring pliers, install the seatback cover completely with new hog rings.

NOTICE:

- **Be careful not to damage the cover.**
- **When installing the hog rings, take care to minimize wrinkles as much as possible.**

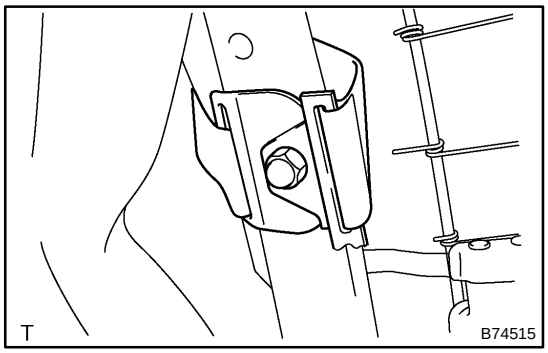

(e) w/ Side airbag:
Install the seatback cover bracket with the nut.
Torque: 5.5 N·m (56 kgf·cm, 48 in·lbf)

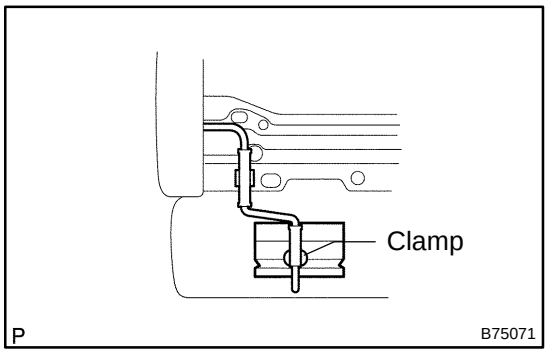

(f) w/ Side airbag:
Install the wire harness and clamp of the side airbag through the seat cushion cover end.

NOTICE:
Be careful not to damage the cover.

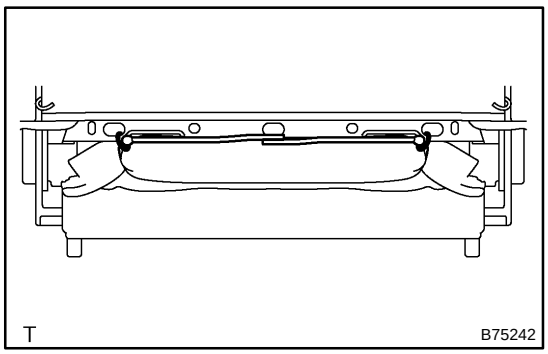

(g) As shown in the illustration, attach a rubber with new hog rings.

(h) Using hog ring pliers, install new hog rings.

NOTICE:
Be careful not to damage the cover.
When installing the hog rings, take care to minimize wrinkles as much as possible.

19. w/ Seat heater:
INSTALL FRONT SEAT CUSHION HEATER ASSY LH

(a) Set the seat heater to the seat cushion cover.

(b) Install the seat heater to the seat cushion cover with the 24 tack pins.

NOTICE:

Do not substitute other metal parts for tack pins.

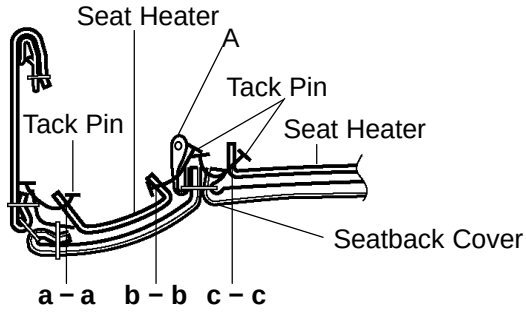

a − a, c − c:

Tack pins should not be beyond the seat.

b − b:

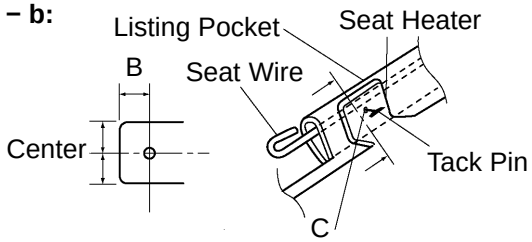

A: Install the tack pins under the wire.

B: 15 mm (0.59 in.)

C: Align the seat heater and the end of listing pocket.

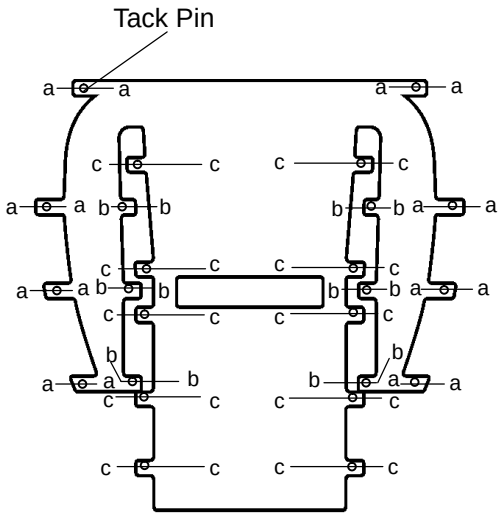

B57686

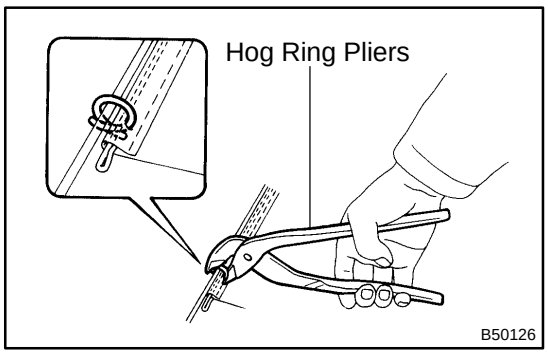

B50126

20. INSTALL FRONT SEAT CUSHION COVER

(a) Install the seat cushion pad to the seat cushion cover.

(b) Using hog ring pliers, install the seat cushion cover with new hog rings to the seat cushion pad.

NOTICE:

- **Be careful not to damage the cover.**
- **When installing the hog rings, take care to minimize wrinkles as much as possible.**

21. INSTALL FRONT SEAT INNER BELT ASSY LH

(a) Install the inner belt with the nut.
Torque: 42 N·m (428 kgf·cm, 31 ft·lbf)

(b) Connect the connectors.

(c) Check that the inner seat belt moves smoothly.

22. INSTALL FRONT SEAT ASSY LH

(a) Place the seat in the cabin.

(b) Conect the connectors under the seat.

(c) Tighten the 2 bolts on the front side of the seat.

Torque: 37 N·m (375 kgf·cm, 27 ft·lbf)

(d) Tighten the 2 bolts on the rear side of the seat.

Torque: 37 N·m (375 kgf·cm, 27 ft·lbf)

(e) Install the 2 seat track covers.

(f) Install the headrest.

23. w/ Seat heater:

INSPECT SEAT HEATER OPRATION

24. Passenger seat only

INITIALIZE FRONT PASSENGER OCCUPANT CLASSIFICATION SYSTEM

HINT:

Perform the zero point calibration or sensitivity check under the conditions listed below.

- The occupant classification ECU is replaced.
- Accessories (seatback tray and seat cover, etc.) are installed.
- The passenger's seat is removed from the vehicle and then reinstalled to the vehicle.
- Both the SRS warning light and the passenger airbag ON/OFF indicator light ("OFF") come on.
- The vehicle is brought to the work shop for repair due to an accident or a collision.

(a) Zero point calibration procedure.

(1) Adjust the seat position according to the conditions below.

Adjustment Component	Position
Slide Direction	Rearmost position
Reclining Angle	Upright position
Headrest Height	Lowest position

(2) Connect the hand−held tester to the DLC3.

(3) Turn the ignition switch to the ON position.

(4) Perform the zero point calibration by following the directions on the tester screen.

HINT:

Refer to the hand−held tester operator's manual for further details.

(b) Sensitivity check procedure.

(1) Connect the hand−held tester to the DLC3.

(2) Apply a 30 kg weight (for example, a 30 kg of lead mass) onto the passenger seat.

(3) Turn the ignition switch to the ON position.

(4) Using the hand−held tester, perform the sensitivity check and confirm that the sensitivity is within the standard value.

Standard value: 27 to 33 kg

HINT:

- When performing the sensitivity check, use a solid weight made from metal. The check result may not be accurate if a weight made from liquid is used.
- When the sensitivity deviates from the standard value, retighten the bolts of the passenger seat, taking care not to deform the seat rail. Perform the sensitivity check again. If the sensitivity still does not stay within the standard value, replace the front RH seat assy.

NOTICE:

Do not place any objects on the seat. Perform the initialization by attaching a mass heavier than 2 kgs in the seatback pocket, seatback table installed by the user, or other appropriate location.

FRONT SEAT ASSEMBLY (POWER SEAT TYPE)

720O5−02

COMPONENTS

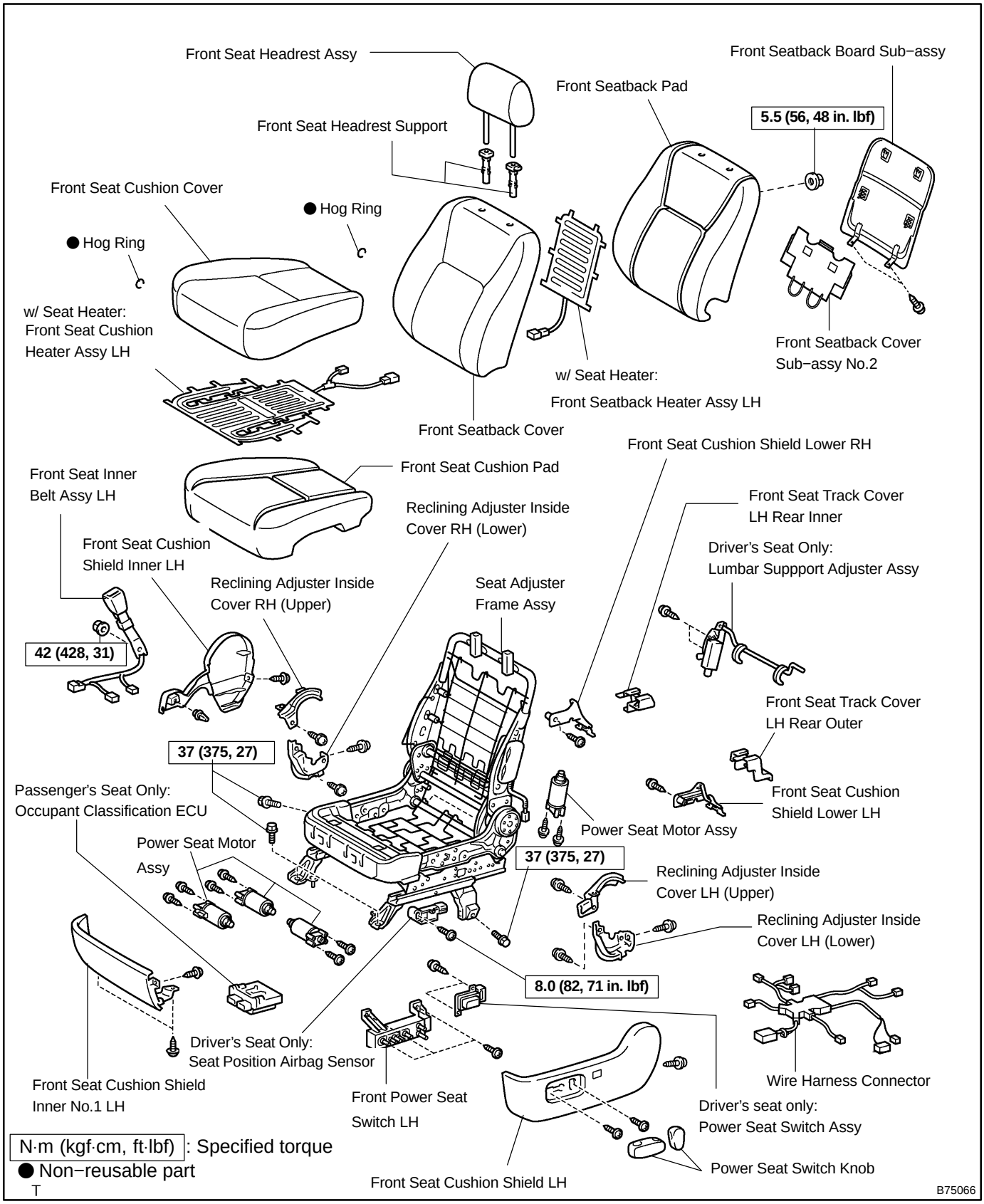

720O6−02

OVERHAUL

CAUTION:

- **Wear safety gloves, because the sharp surfaces of the seatback frame and seat adjuster may injure your hand.**
- **Work must be started more than 90 seconds after the ignition switch is turned to the LOCK position and the negative (−) terminal cable is disconnected from the battery.**
  (The SRS is equipped with a back−up power source. If work is started within 90 seconds from disconnecting the negative (−) terminal cable of the battery, the SRS may deploy.)

HINT:

- The installation procedures are the removal procedures in reverse order. However, only installation procedures requiring additional information are included.
- When removing/installing and overhauling the passenger seat, check the passenger occupant classification system and perform the zero point calibration (see page 05−1452).
- Use the same procedures for the RH side and LH side.
- A bolt without a torque specification is shown in the standard bolt chart (see page 03−2).

1. REMOVE FRONT SEAT TRACK COVER LH REAR OUTER

2. REMOVE FRONT SEAT TRACK COVER LH REAR INNER

3. REMOVE FRONT SEAT ASSY LH

HINT:

Set the power seat front vertical function to the highest position.

(a) Remove the headrest.

(b) Remove the 4 bolts and seat.

(c) Disconnect the connectors under the seat.

NOTICE:

Be careful not to damage the body.

4. Passenger's seat only:
REMOVE OCCUPANT CLASSIFICATION ECU (See page 60−72)

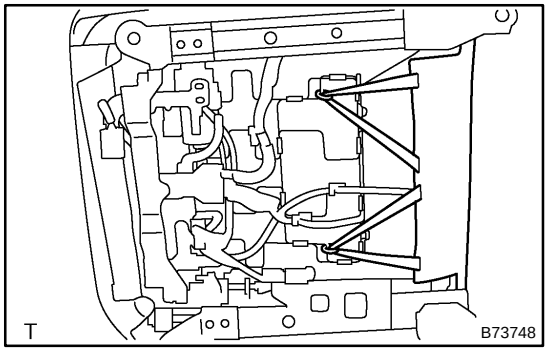

5. REMOVE FRONT SEAT CUSHION SHIELD LH

(a) Remove the 2 front seatback cover No. 2 hog rings under the seat.

(b) Using a screwdriver, remove the 2 reclining power seat switch knobs.

HINT:

Tape the screwdriver tip before use.

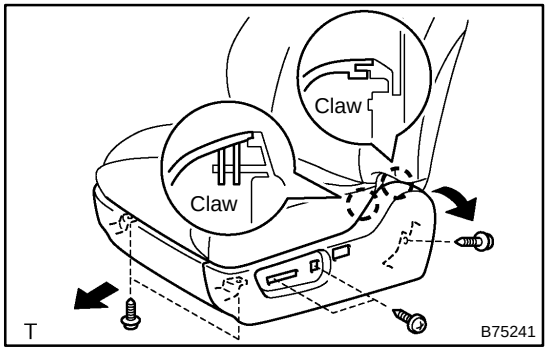

(c) Remove the 5 screws.

(d) Using a screwdriver, disengage the claws and remove the cushion shield LH together with the cushion shield inner No.1 LH, and then disconnect the connector.

HINT:

Tape the screwdriver tip before use.

(e) Driver's seat only:
Remove the 2 screws and lumbar support switch.

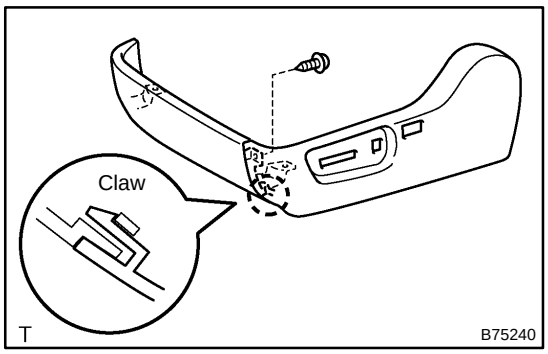

6. REMOVE DUMMY'

(a) Remove the screw.

(b) Using a screwdriver, disengage the claws and remove the inner from the cushion shield.

HINT:

Tape the screwdriver tip before use.

7. REMOVE FRONT SEAT INNER BELT ASSY LH

(a) Disconnect the connector.

(b) Remove the nut and inner belt.

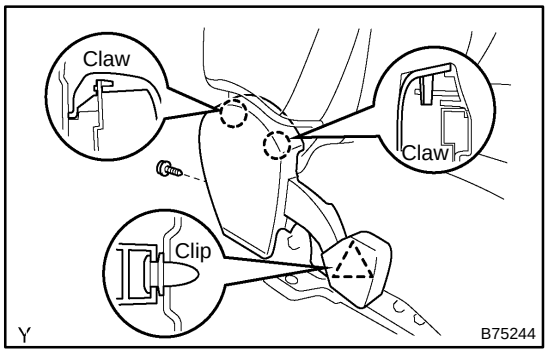

8. REMOVE FRONT SEAT CUSHION SHIELD INNER LH

(a) Remove the screw.

(b) Using a screwdriver, disengage the 2 claws and clip and remove the cushion shield.

HINT:

Tape the screwdriver tip before use.

9. REMOVE FRONT POWER SEAT SWITCH LH

(a) Disconnect the connector.

(b) Remove the 3 screws and power seat switch.

10. REMOVE FRONT SEAT CUSHION COVER

(a) w/ Seat heater:
Disconnect the seat connectors.

(b) Disengage the hook, and remove the seat cushion cover together with the pad.

(c) Remove the hog rings and seat cushion cover.

11. w/ Seat heater:
REMOVE FRONT SEAT CUSHION HEATER ASSY LH

(a) Cut off the tack pins which fasten the seat heater, and then remove the front seat heater from the seat cushion cover.

NOTICE:

Be careful not to damage the seat cushion cover.

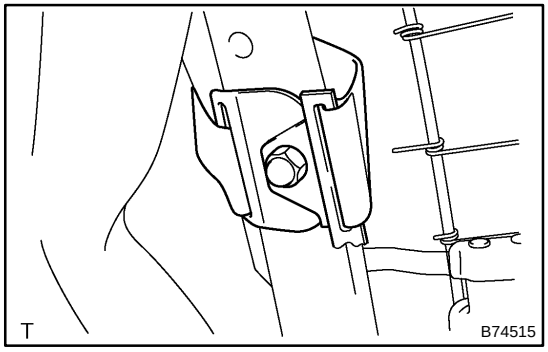

12. REMOVE FRONT SEATBACK COVER

(a) Remove the 2 screws and seatback board.

(b) Disengage the hook and remove the front seatback cover No. 2.

(c) w/ Side airbag:
Remove the hog rings, nut and seatback cover bracket.

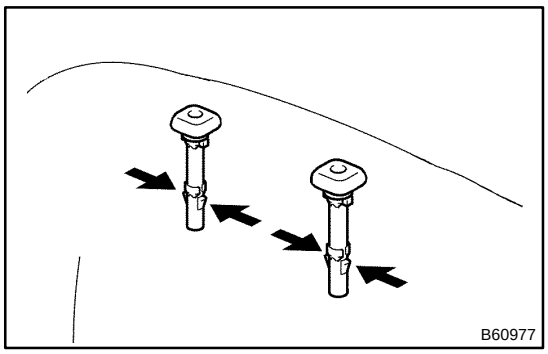

(d) Remove the 2 headrest supports.
(e) Remove the hog rings and seatback cover together with the pad.
(f) Remove the hog rings and seatback cover.

13. w/ Seat heater:
REMOVE FRONT SEATBACK HEATER ASSY LH

(a) Cut off the tack pins which fasten the seat heater, and then remove the front seat heater from the seat back cover.

NOTICE:
Be careful not to damage the seat back cover.

14. REMOVE FRONT SEAT ADJUSTER SUB−ASSY LH

(a) Remove the 2 screws and the lumbar support adjuster.
(b) Remove the wire harness connector.
(c) Remove the screw and reclining adjuster inside cover LH (upper).
(d) Remove the screw and reclining adjuster inside cover RH (upper).
(e) Remove the screw and reclining adjuster inside cover LH (lower).
(f) Remove the screw and reclining adjuster inside cover RH (lower).
(g) Remove the screw and front cushion shield lower LH.
(h) Remove the screw and front cushion shield lower RH.

15. REMOVE POWER SEAT MOTOR ASSY

(a) Remove the 2 screws each to remove the sliding motor, reclining motor, front vertical motor and rear vertical motor.

16. Driver's seat only:
REMOVE SEAT POSITION AIRBAG SENSOR

(a) Disconnect the wire harness connector.
(b) Using a torx socket wrench (T30), remove the torx bolt and airbag sensor.

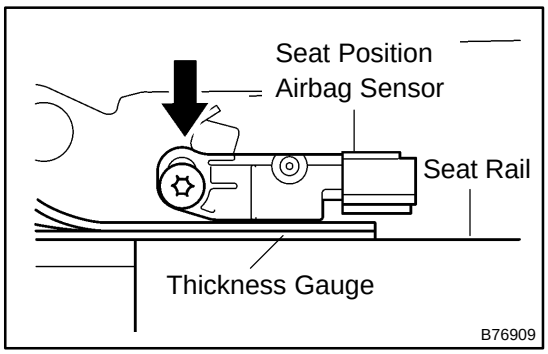

17. Driver's seat only):
INSTALL SEAT POSITION AIRBAG SENSOR

(a) Temporarily install the seat position airbag sensor.
(b) Install a 1 mm thickness gauge between the slide rail and sensor as shown in the illustration.

NOTICE:

- **If the seat position airbag sensor has been dropped, or there are any cracks, dents or other defects in the case, bracket or connector, replace the seat position airbag sensor with a new one.**
- **When installing the seat position airbag sensor, be careful that the SRS wiring does not interfere with other parts and is not pinched between other parts.**

HINT:
Be sure to maintain a clearance between the seat position airbag sensor and the seat rail is within 0.6 mm (0.023 in.) to 2 mm (0.079 in.).

(c) Push the top of the sensor. While holding the sensor, tighten the sensor using a torx socket wrench (T30).
Torque: 8.0 N·m (82 kgf·cm, 71 in.·lbf)

(d) Connect the wire harness connector.

18. w/ Seat heater:
INSTALL FRONT SEATBACK HEATER ASSY LH

(a) Set the seat heater to the seatback cover.

(b) Install the front seat heater to the seatback cover with the 8 tack pins.

NOTICE:
Do not substitute other metal parts for tack pins.

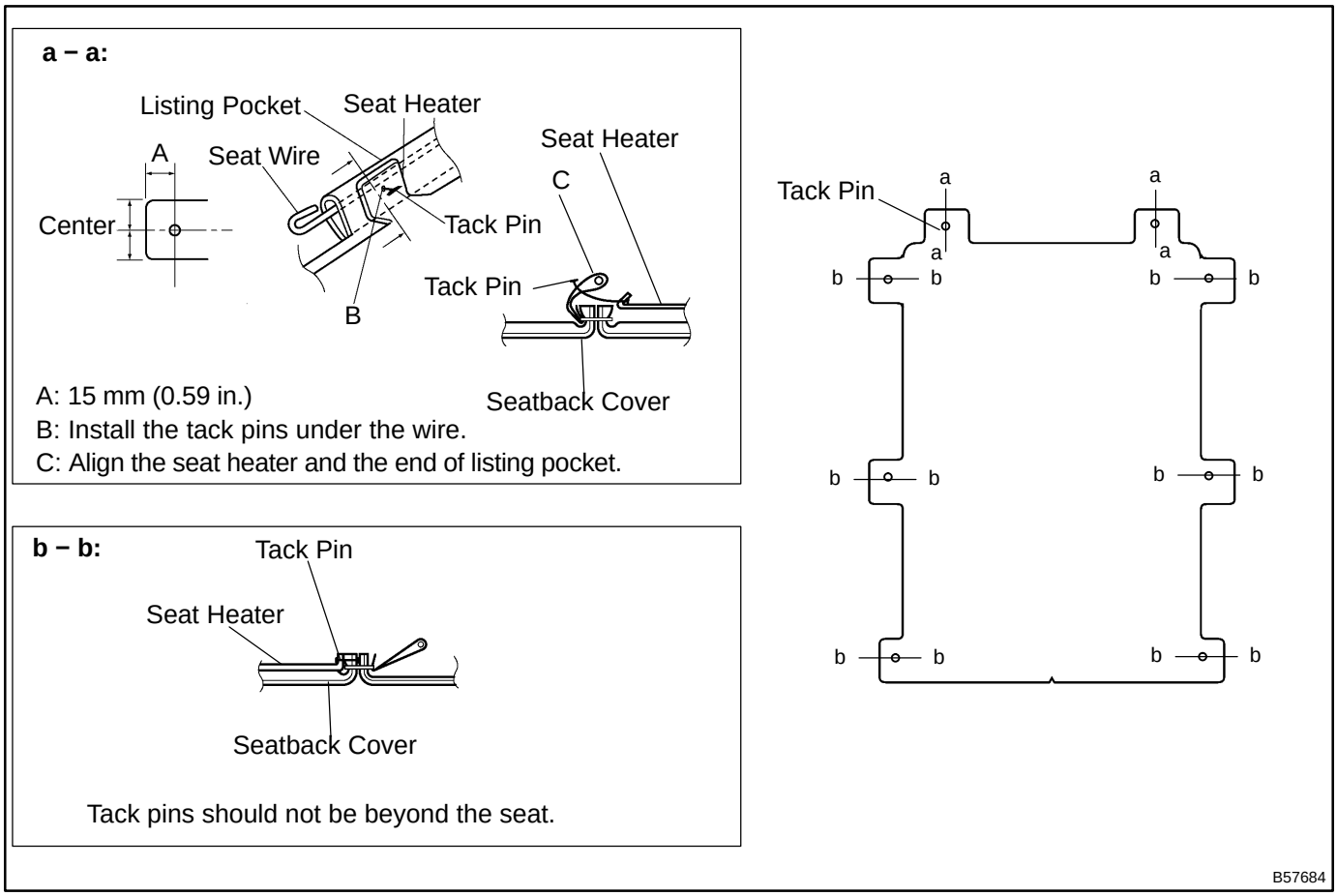

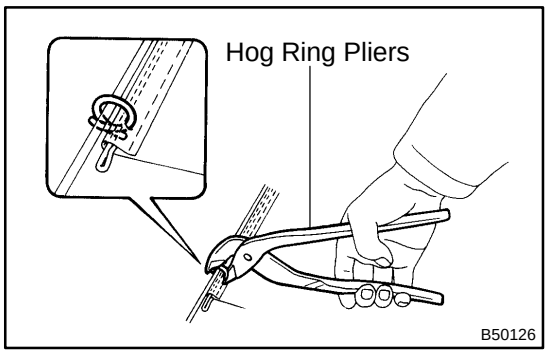

19. INSTALL FRONT SEATBACK COVER

(a) Install the seatback pad.

(b) Cover the top of the seatback pad with the seatback cover.

(c) Install the 2 headrest supports.

(d) Using hog ring pliers, install the seatback cover completely with new hog rings.

NOTICE:

- **Be careful not to damage the cover.**
- **When installing the hog rings, take care to minimize wrinkles as much as possible.**

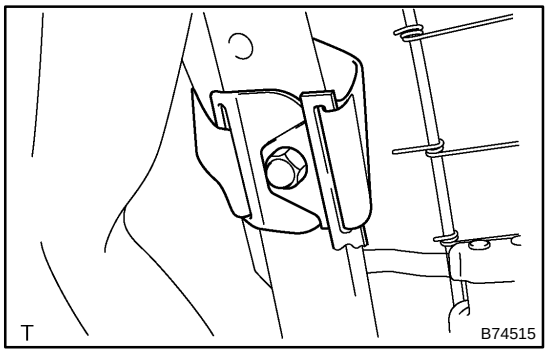

(e) w/ Side airbag:
Install the seatback cover bracket with the nut.
Torque: 5.5 N·m (56 kgf·cm, 48 in·lbf)

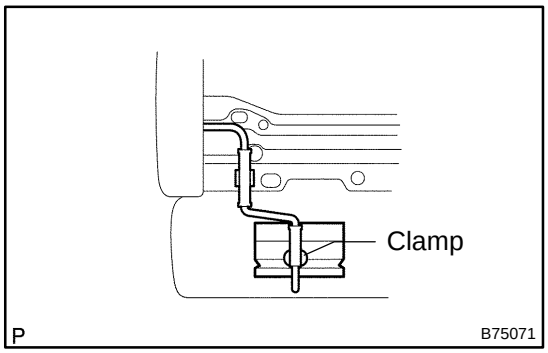

(f) w/ Side airbag:
Install the wire harness and clamp of the side airbag through the seat cushion cover end.

NOTICE:

- **Be careful not to damage the cover.**

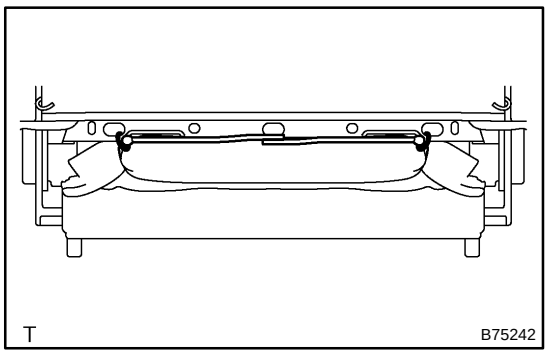

(g) As shown in the illustration, attach a rubber with new hog rings.

(h) Using hog ring pliers, install new hog rings.

NOTICE:

- **Be careful not to damage the cover.**
- **When installing the hog rings, take care to minimize wrinkles as much as possible.**

20. w/ Seat heater:
INSTALL FRONT SEAT CUSHION HEATER ASSY LH

(a) Set the seat heater to the seat cushion cover.
(b) Install the seat heater to the seat cushion cover with the 24 tack pins.

NOTICE:
Do not substitute other metal parts for tack pins.

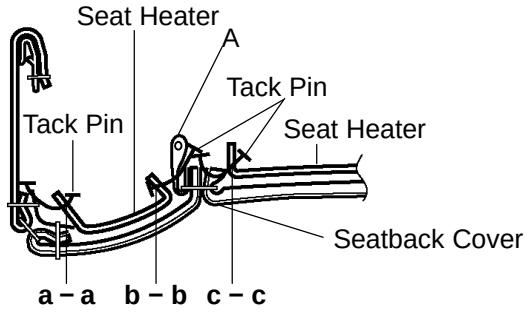

a − a, c − c:

Tack pins should not be beyond the seat.

b − b:

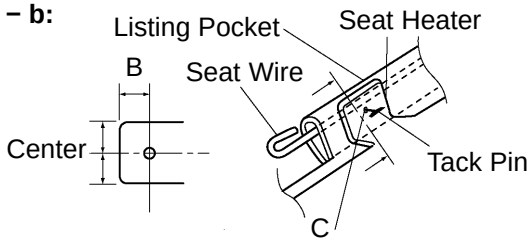

A: Install the tack pins under the wire.
B: 15 mm (0.59 in.)
C: Align the seat heater and the end of listing pocket.

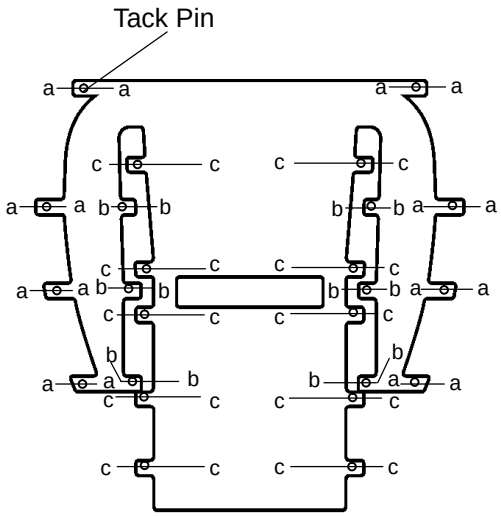

B57686

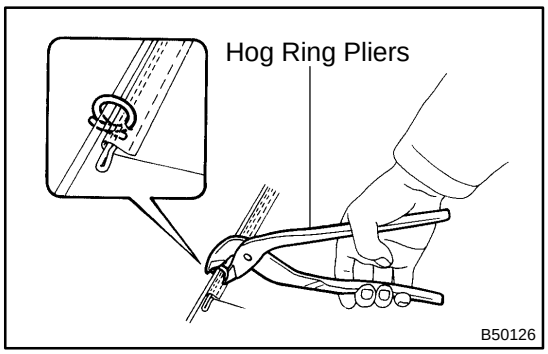

B50126

21. INSTALL FRONT SEAT CUSHION COVER

(a) Install the seat cushion pad to the seat cushion cover.
(b) Using hog ring pliers, install the cushion cover to the cushion pad with new hog rings.

NOTICE:

- **Be careful not to damage the cover.**
- **When installing the hog rings, take care to minimize wrinkles as much as possible.**

22. INSTALL FRONT SEAT INNER BELT ASSY LH

(a) Install the inner belt with the nut.
Torque: 42 N·m (428 kgf·cm, 31 ft·lbf)
(b) Connect the connectors.
(c) Check that the inner seat belt moves smoothly.

23. INSTALL FRONT SEAT ASSY LH

(a) Place the seat in the cabin.

(b) Connect the connectors under the seat.

(c) Tighten the 2 bolts on the front side of the seat.

Torque: 37 N·m (375 kgf·cm, 27 ft·lbf)

(d) Tighten the 2 bolts on the rear side of the seat.

Torque: 37 N·m (375 kgf·cm, 27 ft·lbf)

(e) Install the 2 seat track covers.

(f) Install the headrest.

24. INSPECT POWER SEAT OPERATION (See page 72−4)

25. w/ Seat heater:

INSPECT SEAT HEATER OPRATION

26. Passenger's seat only:

INITIALIZE FRONT PASSENGER OCCUPANT CLASSIFICATION SYSTEM

HINT:

Perform the zero point calibration or sensitivity check under the conditions listed below.

- The occupant classification ECU is replaced.
- Accessories (seatback tray and seat cover, etc.) are installed.
- The passenger's seat is removed from the vehicle and then reinstalled to the vehicle.
- Both the SRS warning light and the passenger airbag ON/OFF indicator light ("OFF") come on.
- The vehicle is brought to the work shop for repair due to an accident or a collision.

(a) Zero point calibration procedure.

(1) Adjust the seat position according to the conditions below.

Adjustment Component	Position
Slide Direction	Rearmost position
Reclining Angle	Upright position
Headrest Height	Lowest position

(2) Connect the hand−held tester to the DLC3.

(3) Turn the ignition switch to the ON position.

(4) Perform the zero point calibration by following the directions on the tester screen.

HINT:

Refer to the hand−held tester operator's manual for further details.

(b) Sensitivity check procedure.

(1) Connect the hand−held tester to the DLC3.

(2) Apply a 30 kg weight (for example, a 30 kg of lead mass) onto the passenger seat.

(3) Turn the ignition switch to the ON position.

(4) Using the hand−held tester, perform the sensitivity check and confirm that the sensitivity is within the standard value.

Standard value: 27 to 33 kg

HINT:

- When performing the sensitivity check, use a solid weight made from metal. The check result may not be accurate if a weight made from liquid is used.
- When the sensitivity deviates from the standard value, retighten the bolts of the passenger seat, taking care not to deform the seat rail. Perform the sensitivity check again. If the sensitivity still does not stay within the standard value, replace the front RH seat assy.

NOTICE:

Do not place any objects on the seat. Perform the initialization by attaching a mass heavier than 2 kgs in the seatback pocket, seatback table installed by the user, or other appropriate location.

REAR SEAT ASSEMBLY

720WS−01

COMPONENTS

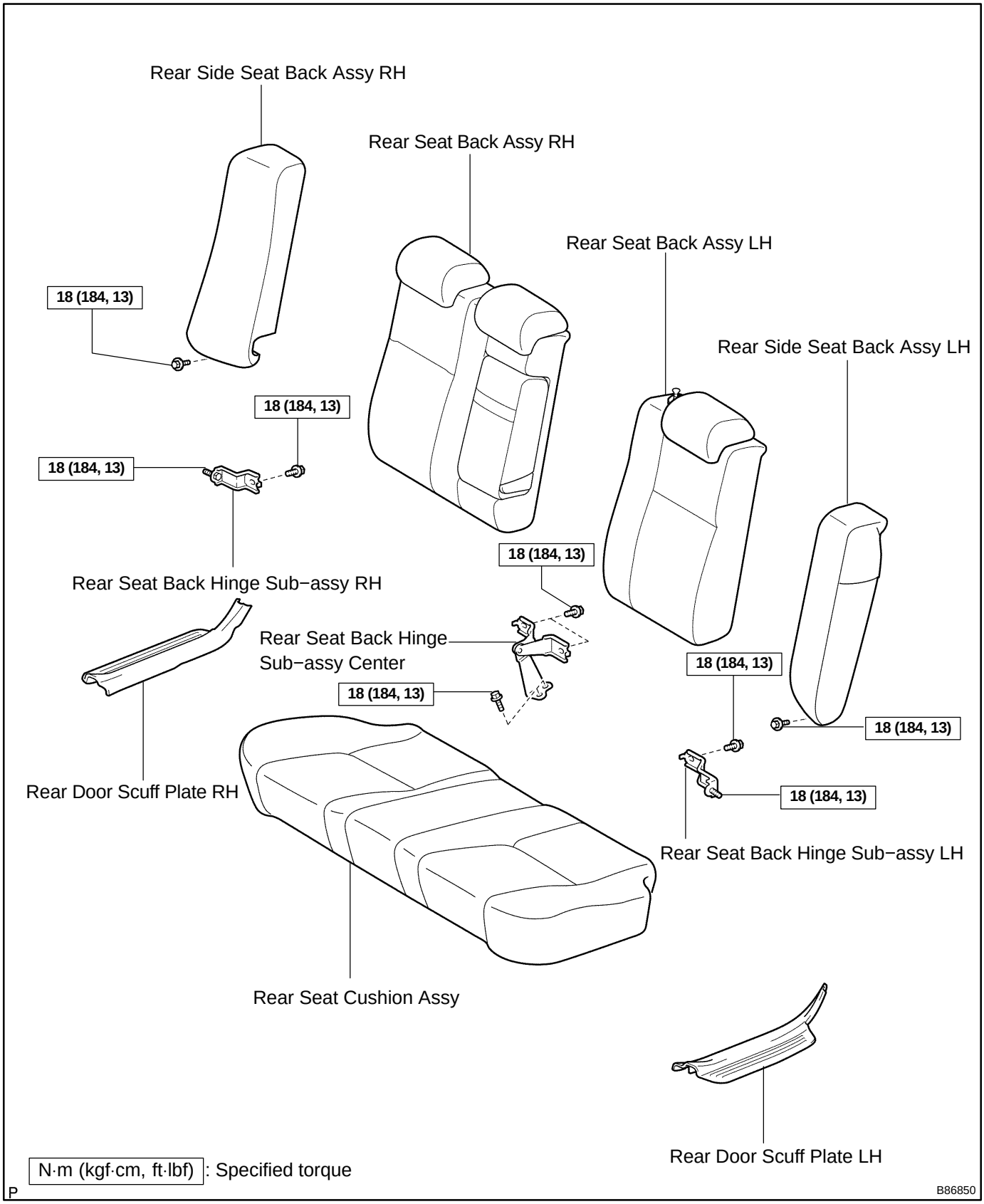

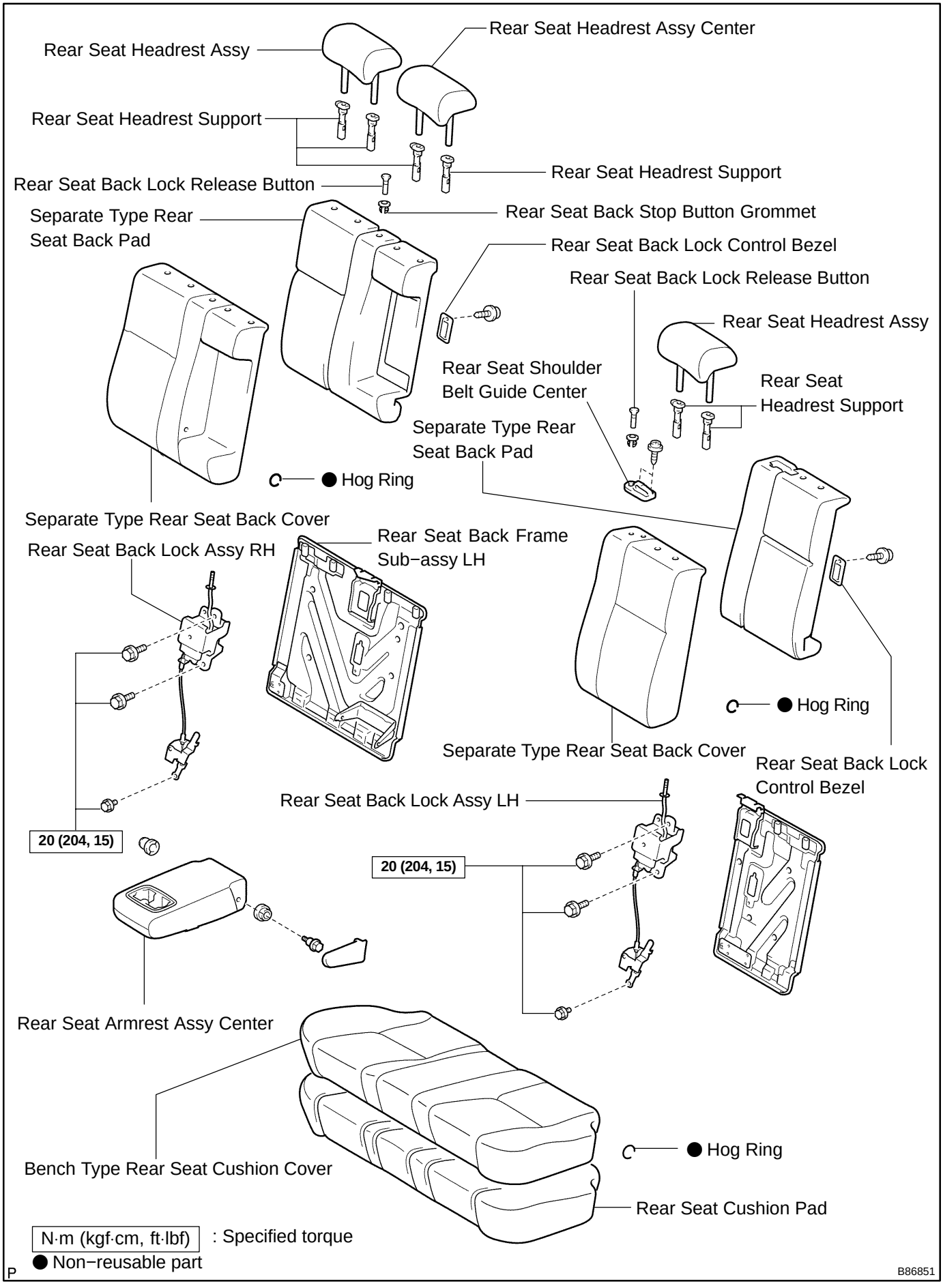
Rear Seat Headrest Assy
Rear Seat Headrest Assy Center
Rear Seat Headrest Support
Rear Seat Headrest Support
Rear Seat Back Lock Release Button
Separate Type Rear Seat Back Pad
Rear Seat Back Stop Button Grommet
Rear Seat Back Lock Control Bezel
Rear Seat Back Lock Release Button
Rear Seat Headrest Assy
Rear Seat Shoulder Belt Guide Center
Rear Seat Headrest Support
Separate Type Rear Seat Back Pad
C ● Hog Ring
Separate Type Rear Seat Back Cover
Rear Seat Back Lock Assy RH
Rear Seat Back Frame Sub−assy LH
C ● Hog Ring
Separate Type Rear Seat Back Cover
Rear Seat Back Lock Control Bezel
Rear Seat Back Lock Assy LH
20 (204, 15)
20 (204, 15)
Rear Seat Armrest Assy Center
Bench Type Rear Seat Cushion Cover
C ● Hog Ring
Rear Seat Cushion Pad
N·m (kgf·cm, ft·lbf) : Specified torque
● Non−reusable part
P
B86851

720WT−01

OVERHAUL

HINT:

- COMPONENT: SEE PAGE 72−30.
- Installation is in the reverse order of removal.
- Only installation procedures requiring additional information are included.
- A bolt without a torque specification is shown in the standard bolt chart (see page 03−2).

1. REMOVE REAR DOOR SCUFF PLATE LH (SEE PAGE 76−22)

2. REMOVE REAR DOOR SCUFF PLATE RH (SEE PAGE 76−22)

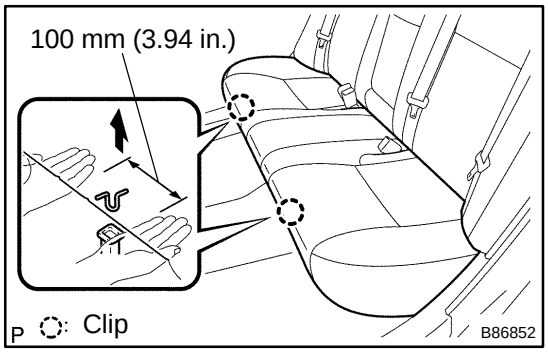

3. REMOVE REAR SEAT CUSHION ASSY

(a) Pull up the 2 portions of the rear seat cushion assy as shown in the illustration and remove it.

A: 100 mm (3.94 in.) or less

NOTICE:

In this case, hold the base of the clip up to prevent the cushion frame from being distorted.

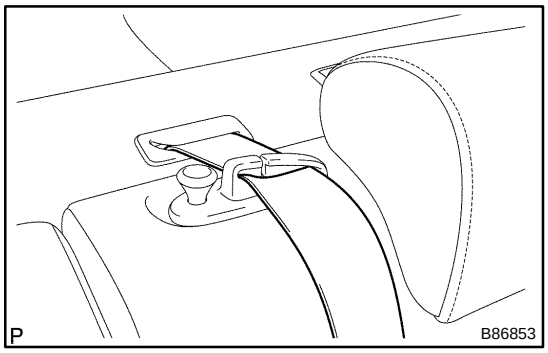

4. REMOVE REAR SEAT BACK ASSY LH

(a) Remove the rear seat belt from the rear seat shoulder belt guide center.

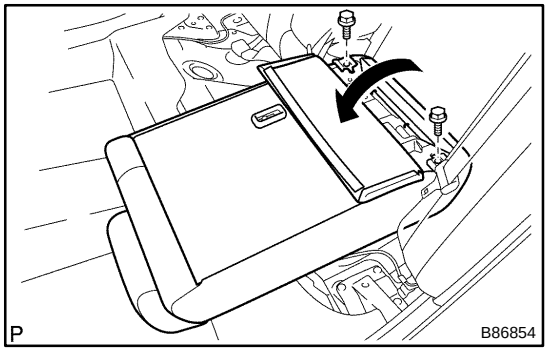

(b) Fold the rear seat assy LH forward and open the separate type rear seat back cover.

(c) Remove the 2 bolts and the rear seat back assy LH.

5. REMOVE REAR SEAT BACK ASSY RH

HINT:

Use the same procedures for the RH side and LH side.

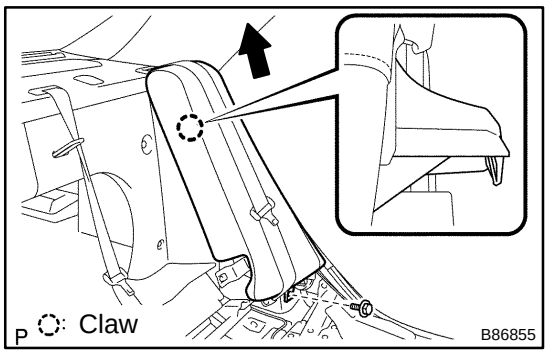

6. REMOVE REAR SIDE SEAT BACK ASSY LH

(a) Remove the bolt and the rear side seat back assy LH as shown in the illustration.

7. REMOVE REAR SIDE SEAT BACK ASSY RH

HINT:

Use the same procedures for the RH side and LH side.

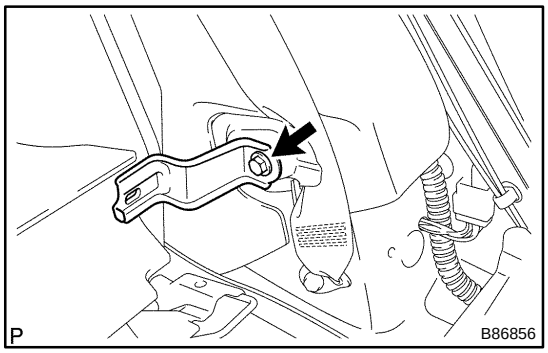

8. REMOVE REAR SEAT BACK HINGE SUB−ASSY LH

(a) Remove the bolt and the rear seat back hinge sub−assy LH.

9. REMOVE REAR SEAT BACK HINGE SUB−ASSY RH

HINT:

Use the same procedures for the RH side and LH side.

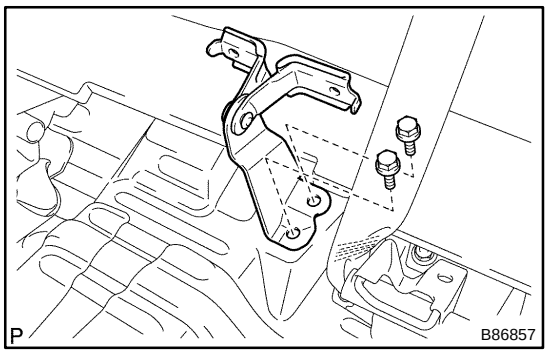

10. REMOVE REAR SEAT BACK HINGE SUB−ASSY CENTER

(a) Remove the 2 bolts and the rear seat back hinge sub−assy center.

11. REMOVE BENCH TYPE REAR SEAT CUSHION COVER

(a) Remove the 56 hog rings and the bench type rear seat cushion cover.

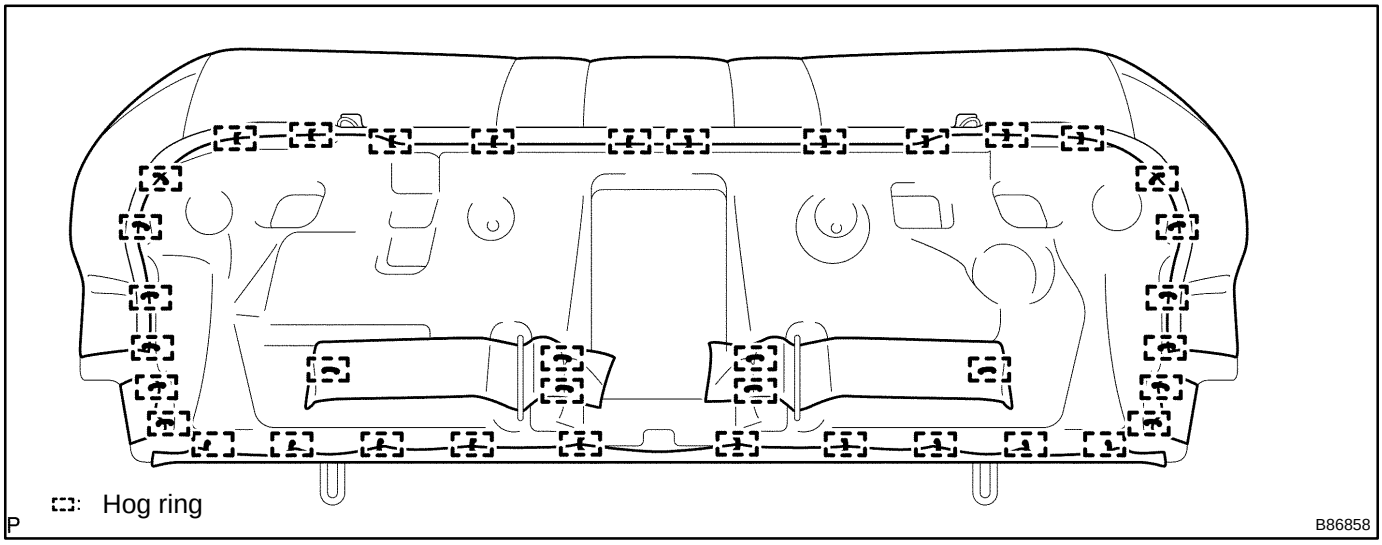

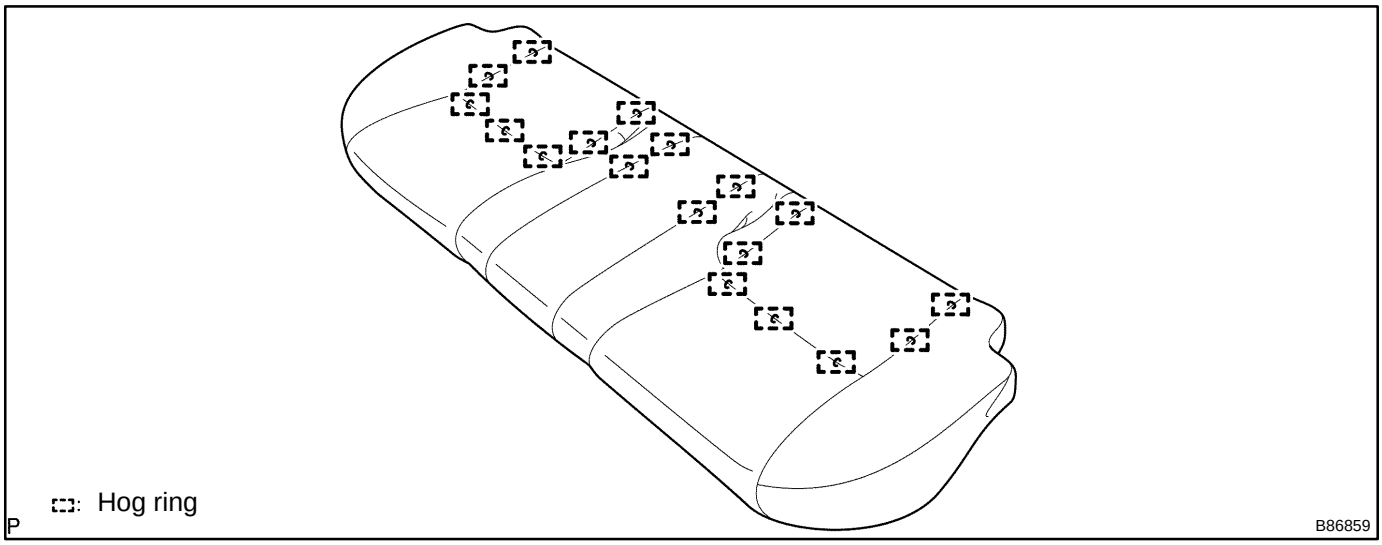

12. REMOVE REAR SEAT HEADREST ASSY

13. REMOVE REAR SEAT HEADREST ASSY CENTER

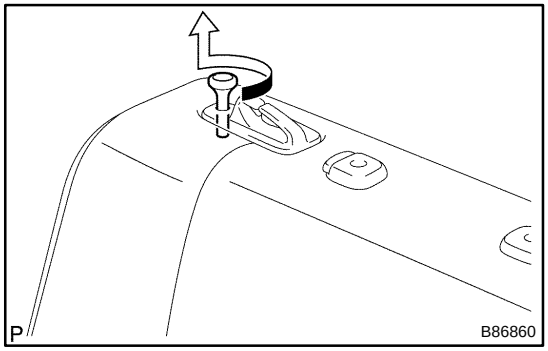

14. REMOVE REAR SEAT BACK LOCK RELEASE BUTTON

(a) Remove the rear seat back lock release button as shown in the illustration.

HINT:

Use the same procedures for the RH side and LH side.

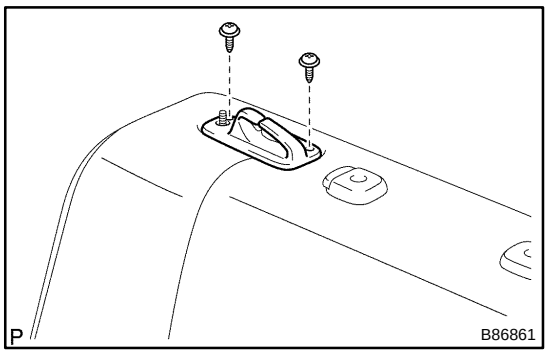

15. REMOVE REAR SEAT SHOULDER BELT GUIDE CENTER

(a) Remove the 2 screws and the rear seat shoulder belt guide center.

HINT:

Use the same procedures for the RH side and LH side.

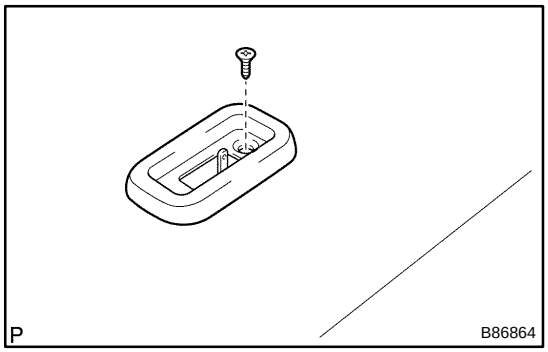

16. REMOVE REAR SEAT BACK LOCK CONTROL BEZEL

(a) Remove the screw and the rear seat back lock control bezel.

HINT:

Use the same procedures for the RH side and LH side.

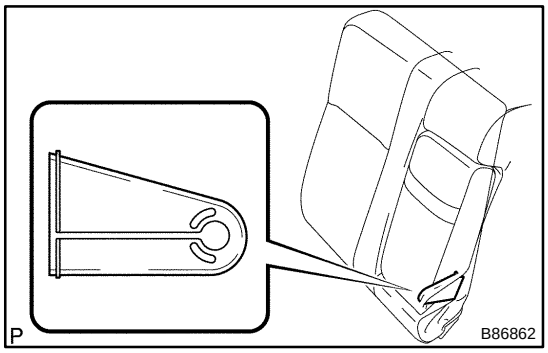

17. REMOVE REAR SEAT BACK HINGE COVER

(a) Remove the rear seat back hinge cover.

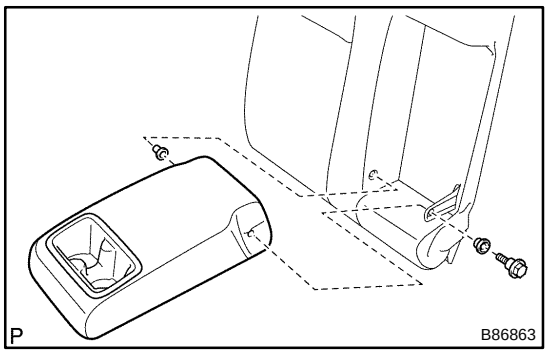

18. REMOVE REAR SEAT ARMREST ASSY CENTER

(a) Remove the bolt and the rear seat armrest assy center.

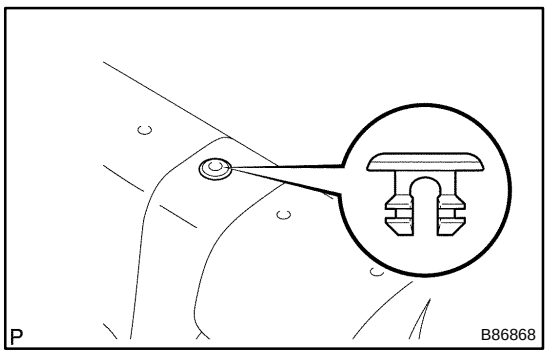

19. REMOVE REAR SEAT BACK STOP BUTTON GROMMET

(a) Remove the rear seat back stop button grommet.

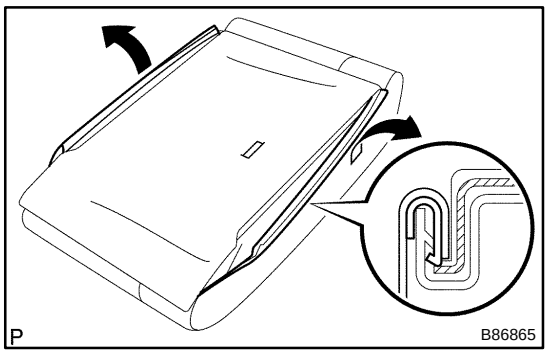

20. REMOVE REAR SEAT HEADREST SUPPORT

(a) Disengage the separate type rear seat back cover and turn back the sides of the cover.

(b) Turn back the separate type rear seat back cover and remove the 13 hog rings.

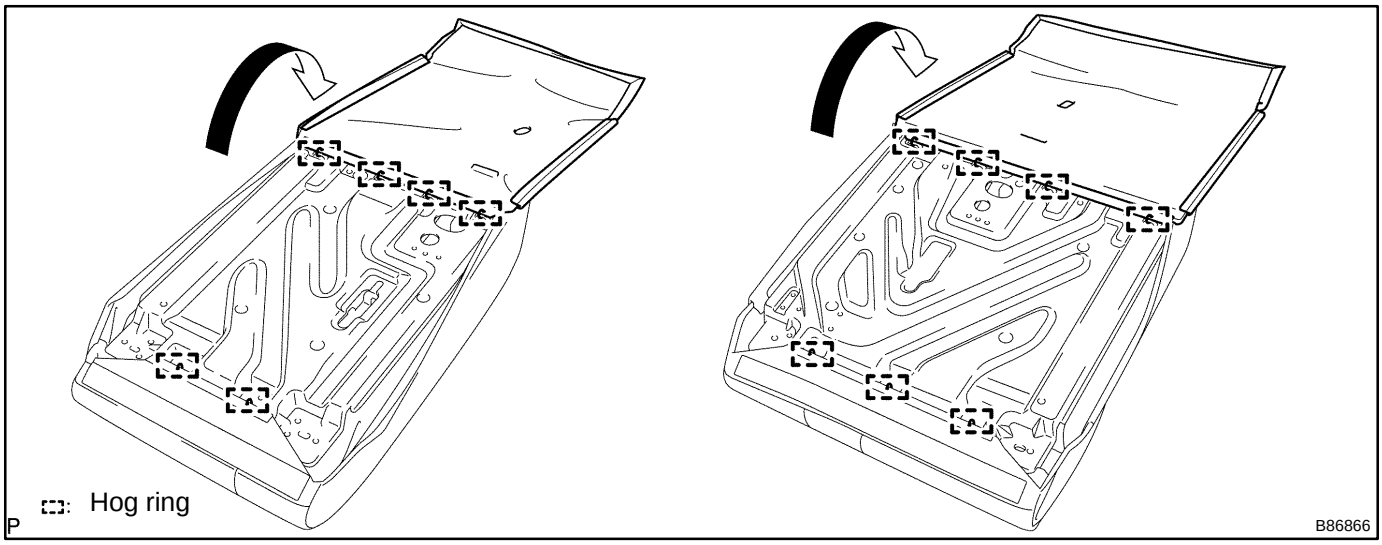

(c) Disengage the 6 claws and remove the 3 rear seat headrest supports.

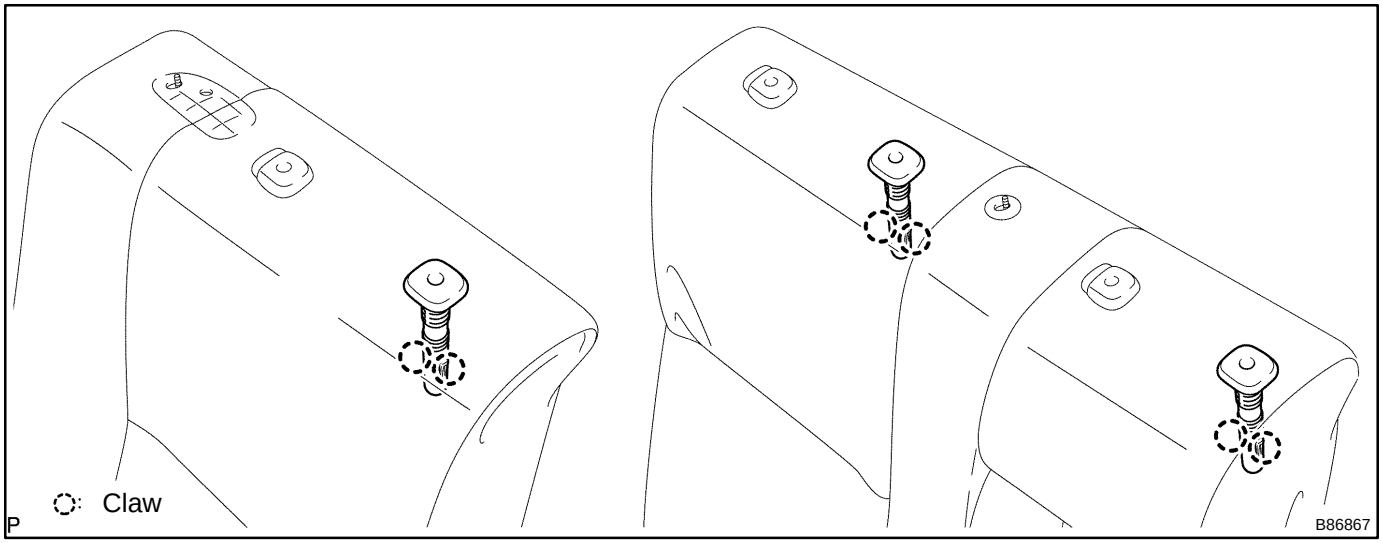

21. REMOVE REAR SEAT HEADREST SUPPORT

HINT:

Use the same procedures for the RH side and LH side.

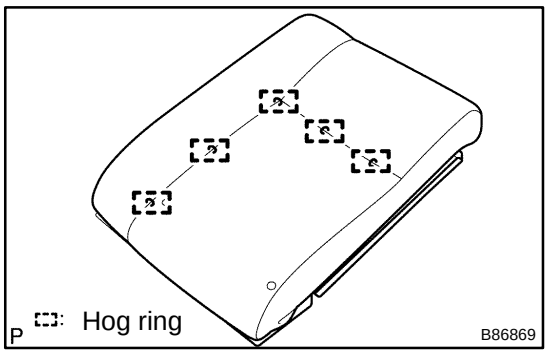

22. REMOVE SEPARATE TYPE REAR SEAT BACK COVER

(a) Remove the 5 hog rings and the separate type rear seat back cover.

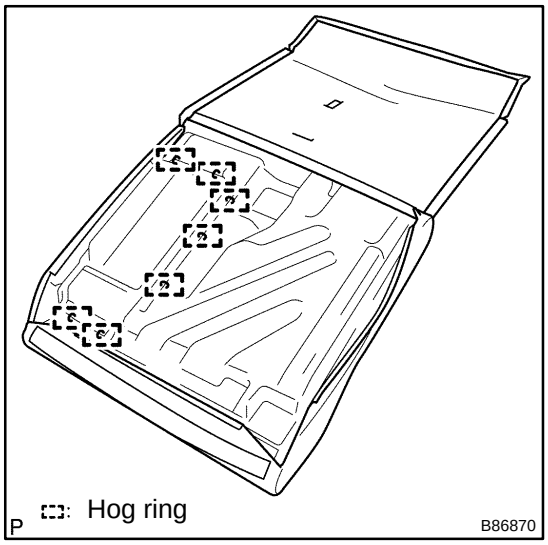

23. REMOVE SEPARATE TYPE REAR SEAT BACK COVER

(a) Remove the 12 hog rings and the separate type rear seat back cover.

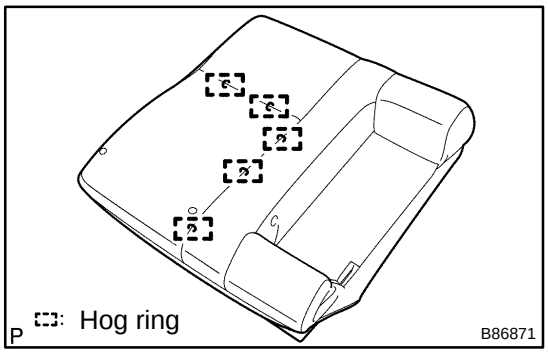

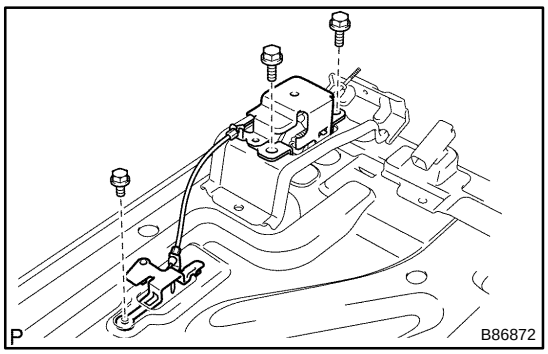

24. REMOVE REAR SEAT BACK LOCK ASSY LH

(a) Remove the 3 bolts and the rear seat back lock assy LH.

25. REMOVE REAR SEAT BACK LOCK ASSY RH

HINT:

Use the same procedures for the RH side and LH side.

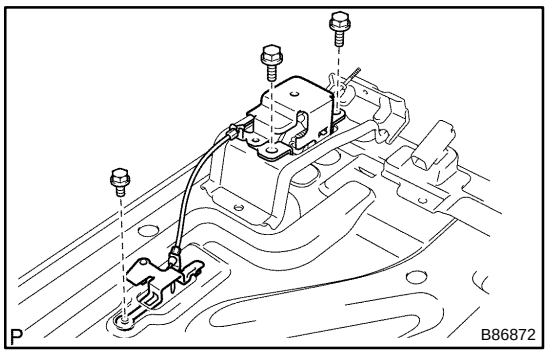

26. INSTALL REAR SEAT BACK LOCK ASSY LH

(a) Install the rear seat back lock assy LH with the 3 bolts.
Torque: 20 N·m (204 kgf·cm, 15 ft·lbf)

27. INSTALL REAR SEAT BACK LOCK ASSY RH
Torque: 20 N·m (204 kgf·cm, 15 ft·lbf)

HINT:
Use the same procedures for the RH side and LH side.

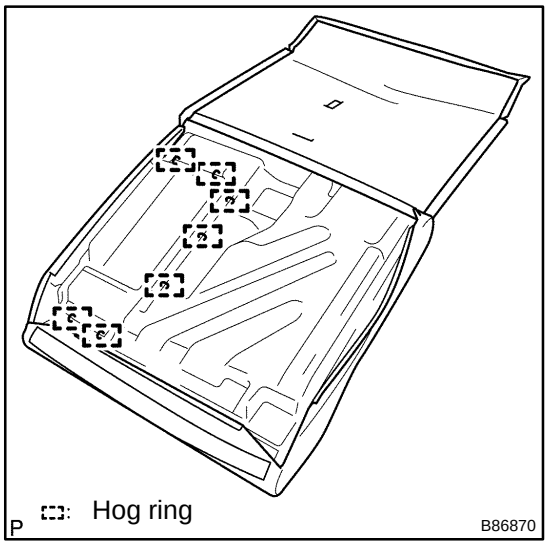

28. INSTALL SEPARATE TYPE REAR SEAT BACK COVER

(a) Using hog ring pliers, install the separate type rear seat back cover with 12 new hog rings.

NOTICE:

- **Be careful not to damage the cover.**
- **When installing the hog rings, take care to minimize wrinkles as much as possible.**

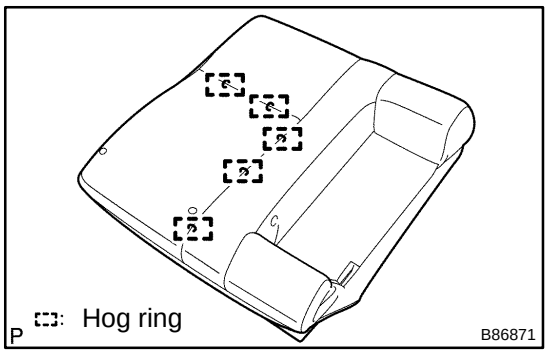

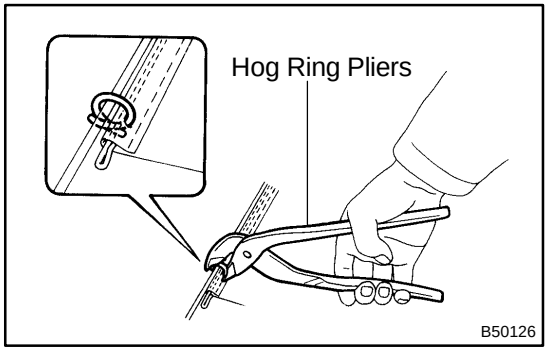

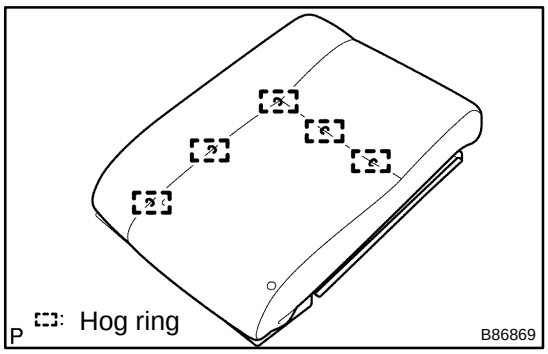

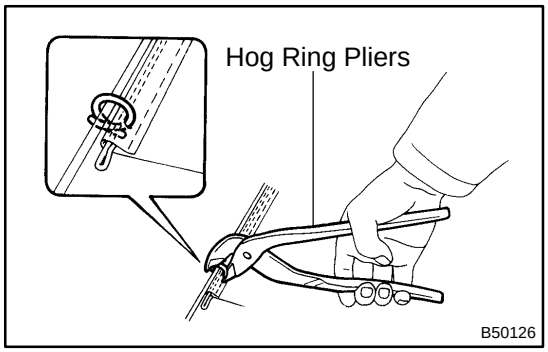

29. INSTALL SEPARATE TYPE REAR SEAT BACK COVER

(a) Using hog ring pliers, install the separate type rear seat back cover with 5 new hog rings.

NOTICE:

- **Be careful not to damage the cover.**
- **When installing the hog rings, take care to minimize wrinkles as much as possible.**

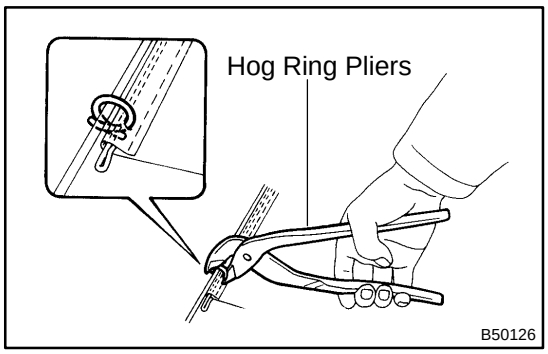

30. INSTALL BENCH TYPE REAR SEAT CUSHION COVER

(a) Using hog ring pliers, install the bench type rear seat cushion cover with 56 new hog rings.

NOTICE:

- **Be careful not to damage the cover.**
- **When installing the hog rings, take care to minimize wrinkles as much as possible.**

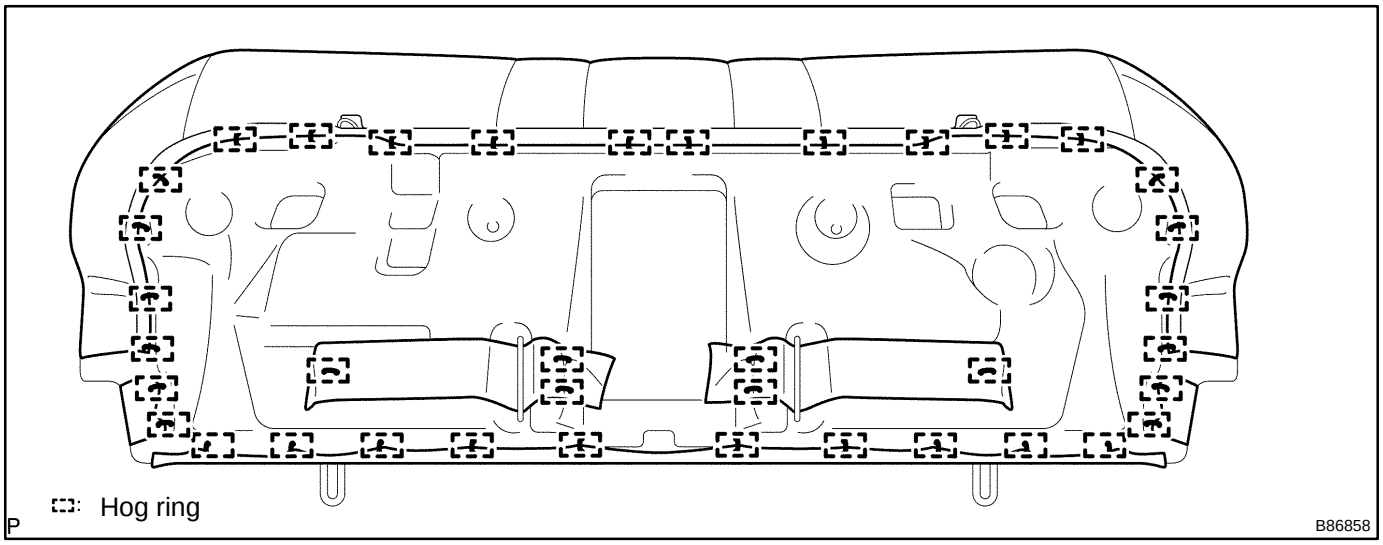

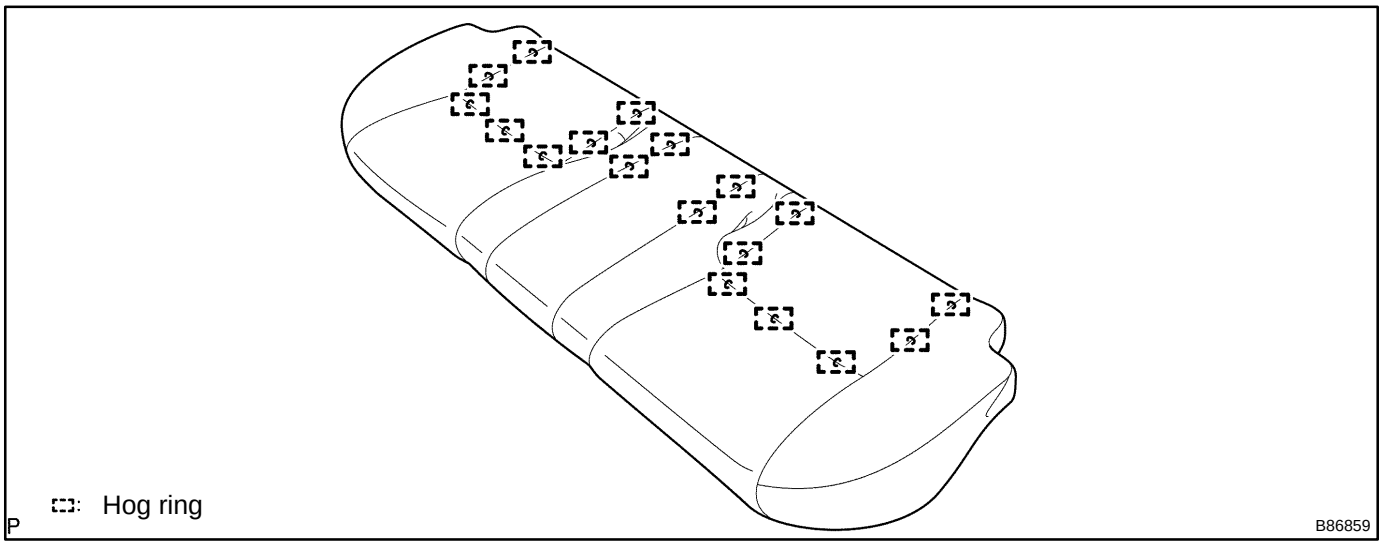

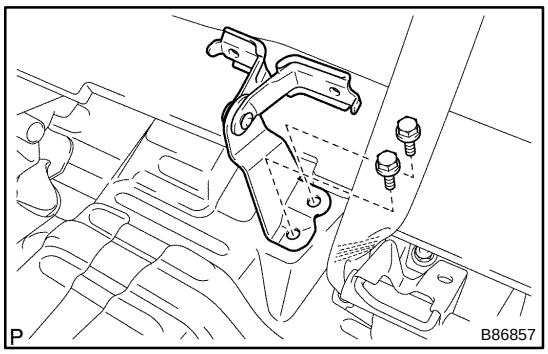

31. INSTALL REAR SEAT BACK HINGE SUB−ASSY CENTER

(a) Install the rear seat back hinge sub−assy center with the 2 bolts.
Torque: 18 N·m (184 kgf·cm, 13 ft·lbf)

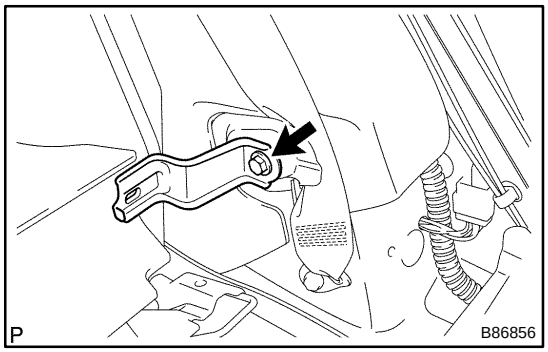

32. INSTALL REAR SEAT BACK HINGE SUB−ASSY LH

(a) Install the rear seat back hinge sub−assy LH with the bolt.
Torque: 18 N·m (184 kgf·cm, 13 ft·lbf)

33. INSTALL REAR SEAT BACK HINGE SUB−ASSY RH
Torque: 18 N·m (184 kgf·cm, 13 ft·lbf)

HINT:
Use the same procedures for the RH side and LH side.

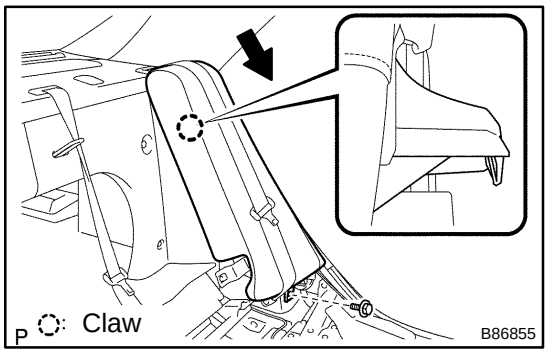

34. INSTALL REAR SIDE SEAT BACK ASSY LH

(a) Install the rear side seat back assy LH with the bolt.
Torque: 18 N·m (184 kgf·cm, 13 ft·lbf)

35. INSTALL REAR SIDE SEAT BACK ASSY RH
Torque: 18 N·m (184 kgf·cm, 13 ft·lbf)

HINT:
Use the same procedures for the RH side and LH side.

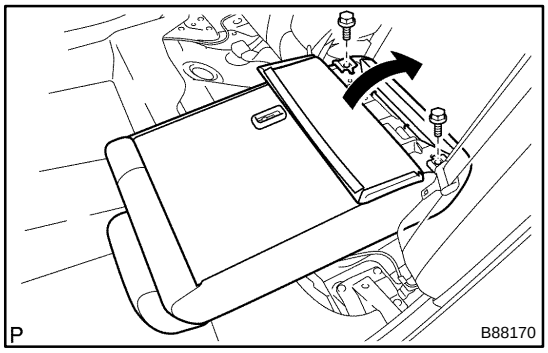

36. INSTALL REAR SEAT BACK ASSY LH

(a) Install the rear seat back assy LH with the 2 bolts.
Torque: 18 N·m (184 kgf·cm, 13 ft·lbf)

(b) Close the separate type rear seat back cover and put back the rear seat back assy LH.

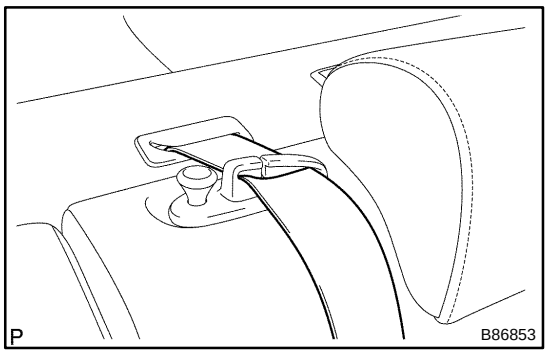

(c) Install the rear seat belt to the rear seat shoulder belt guide center.

37. INSTALL REAR SEAT BACK ASSY RH
Torque: 18 N·m (184 kgf·cm, 13 ft·lbf)

HINT:
Use the same procedures for the RH side and LH side.

POWER DOOR LOCK CONTROL SYSTEM

73083−02

ON−VEHICLE INSPECTION

1. DOOR LOCK FAIL−SAFE

(a) When a malfunction in the door control switch (manual switch, interlocked operation with key) has been detected, door LOCK/UNLOCK operations become disabled.

2. CHECK ELECTRICAL DOOR LOCK OPERATION

(a) Check the basic function.
   (1) Check that all doors lock when the door control switch (for manual operation) is turned to LOCK and all doors unlock when turned to UNLOCK.
   (2) Check that all doors lock when the driver side door lock key cylinder is turned to LOCK and all doors unlock when turned to UNLOCK from outside the vehicle.

(b) Check the key confinement prevention function.

NOTICE:

In order to prevent the key from being locked−in, the inspection should be made with the driver side door glass open.

   (1) Insert the key into the ignition key cylinder.
   (2) With the driver side door open, check that all doors unlock immediately after the door lock knob for the driver side door is turned to LOCK.
   (3) With the driver side door open, check that all doors unlock immediately after the door control switch (for manual operation) is turned to LOCK.
   (4) With the driver side door open, turn the driver side door lock knob to LOCK and hold it for 2 seconds or more, and then close the driver side door. Then, check that all doors unlock.

(c) Check the security function.
   (1) Close all doors with the driver side door glass open so that the door control switch can be operated from outside the vehicle.
   (2) Pull out the key, open the driver side door, and close and lock the door without using the key. Under this condition, check that all doors do not unlock when the door control switch (for manual operation) is turned to UNLOCK from outside the vehicle.
   (3) Pull out the key, close and lock the driver side door by key operation. Under this condition, check that all doors do not unlock when the door control switch (for manual operation) is turned to UNLOCK from outside the vehicle.
   (4) Pull out the key, close the driver side door and lock the door by wireless door lock operation. Under this condition, check that all doors do not unlock when the door control switch (for manual operation) is turned to UNLOCK from outside the vehicle.

HINT:

Check that the security function is canceled under the conditions below:

- The ignition switch is turned ON.
- The driver side door is unlocked using the key.
- The door control switch (for manual operation) is turned to UNLOCK after the door control knob is turned to UNLOCK manually.
- The doors are unlocked by wireless operation.

(d) Check the illumination function.
   (1) Set the room light switch in the DOOR position.
   (2) With all doors locked, check that all doors unlock when the driver side door lock cylinder is turned to UNLOCK using the key. At the same time, the room light comes on.
   (3) The room light goes off in approximately 15 seconds if doors have not been opened for a while.

73082−02

INSPECTION

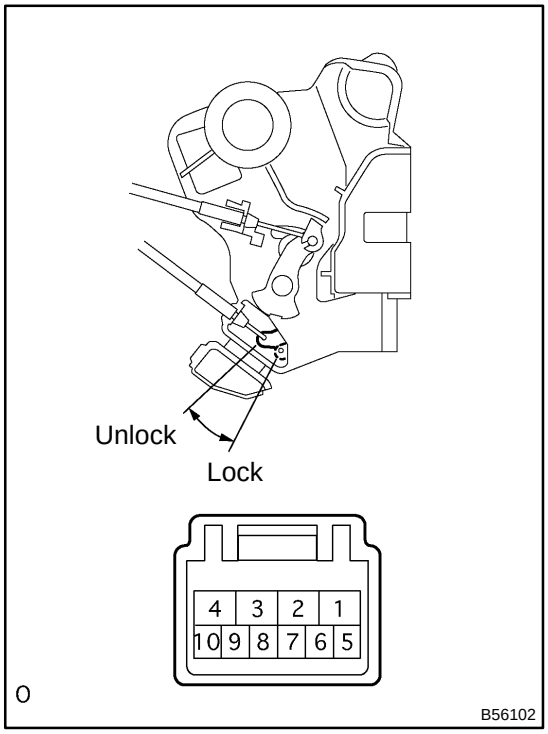

1. INSPECT FRONT DOOR W/MOTOR LOCK ASSY RH

(a) Inspect operation of the door lock motor.

Standard:

Measurement condition	Operation
Battery positive − Terminal 4 Battery negative − Terminal 1	Lock
Battery positive − Terminal 1 Battery negative − Terminal 4	Unlock

If operation is not as specified, replace the door lock assembly.

(b) Inspect the position switch continuity.

Standard:

Terminals No.	Door lock position	Specification
7 ⇔ 8	Lock	No continuity
	Unlock	Continuity

If the continuity is not as specified, replace the door lock assembly.

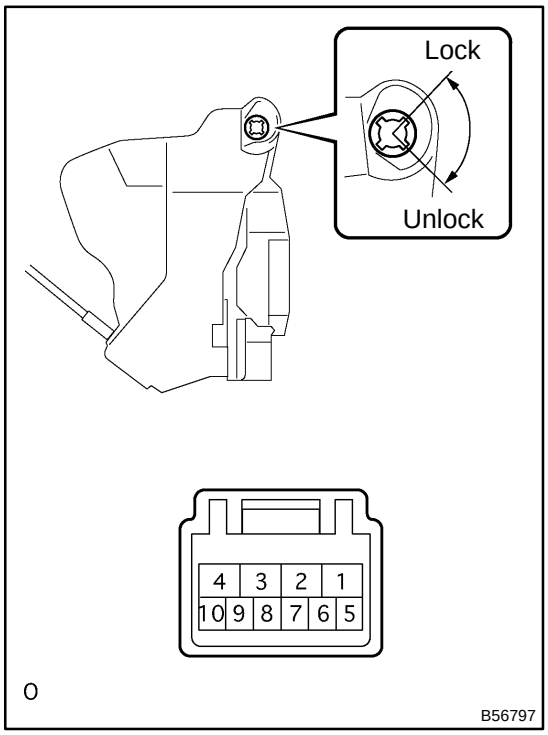

2. INSPECT FRONT DOOR W/MOTOR LOCK ASSY LH

(a) Inspect the door lock assembly continuity.

Standard:

Terminals No.	Switch position	Specified condition
9 − 7	Lock	Continuity
−	OFF	No continuity
10 − 7	Unlock	Continuity

If the continuity is not as specified, replace the door lock assembly.

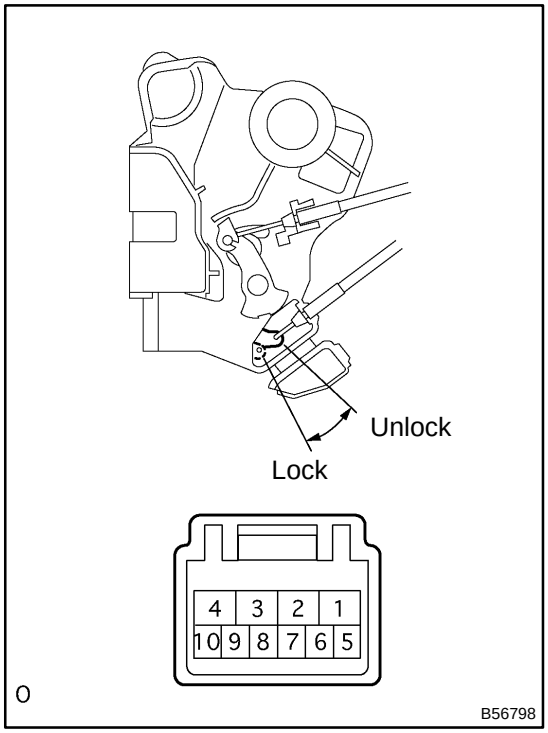

(b) Inspect operation of the door lock motor.

Standard:

Measurement condition	Operation
Battery positive − Terminal 4 Battery negative − Terminal 1	Lock
Battery positive − Terminal 1 Battery negative − Terminal 4	Unlock

If operation is not as specified, replace the door lock assembly.

(c) Inspect the position switch continuity.

Standard:

Terminals No.	Door lock position	Specification
7 ⇔ 8	Lock	No continuity
	Unlock	Continuity

If the continuity is not as specified, replace the door lock assembly.

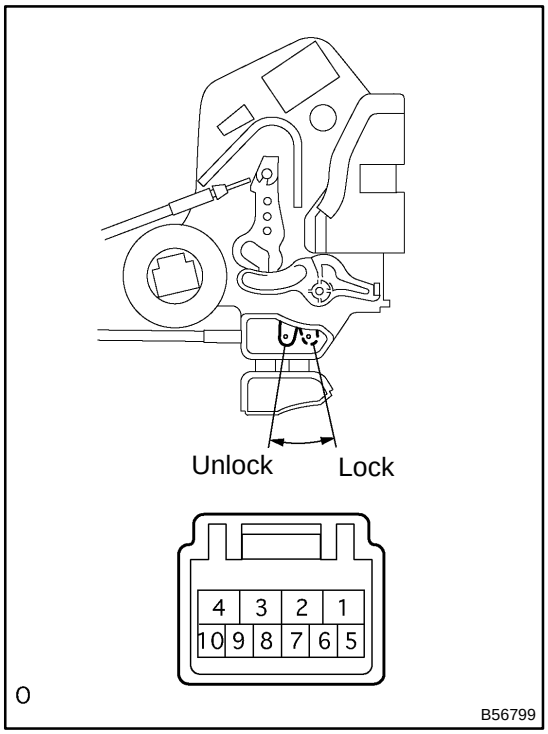

3. INSPECT REAR DOOR W/MOTOR LOCK ASSY RH

(a) Inspect operation of the door lock motor.

Standard:

Measurement condition	Operation
Battery positive − Terminal 4 Battery negative − Terminal 1	Lock
Battery positive − Terminal 1 Battery negative − Terminal 4	Unlock

If operation is not as specified, replace the door lock assembly.

(b) Inspect the position switch continuity.

Standard:

Terminals No.	Door lock position	Specification
6 ⇔ 9	Lock	No continuity
	Unlock	Continuity

If the continuity is not as specified, replace the door lock assembly.

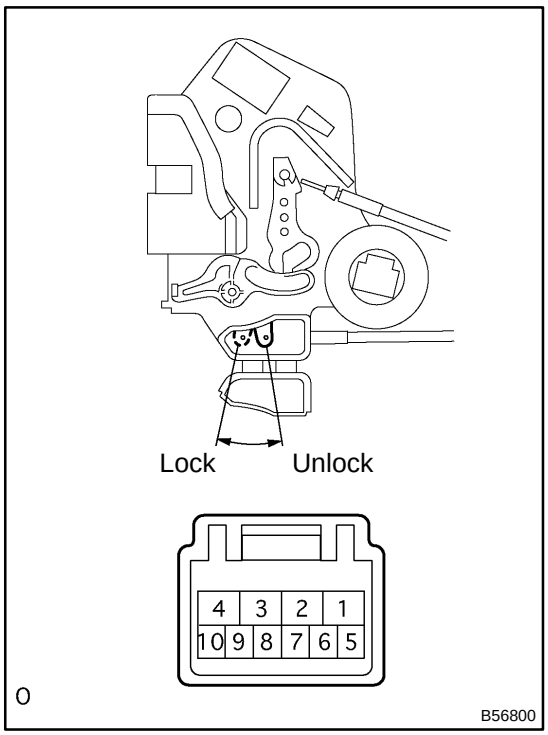

4. INSPECT REAR DOOR W/MOTOR LOCK ASSY LH

(a) Inspect operation of the door lock motor.

Standard:

Measurement condition	Operation
Battery positive − Terminal 4 Battery negative − Terminal 1	Lock
Battery positive − Terminal 1 Battery negative − Terminal 4	Unlock

If operation is not as specified, replace the door lock assembly.

(b) Inspect the position switch continuity.

Standard:

Terminals No.	Door lock position	Specification
6 ⇔ 9	Lock	No continuity
	Unlock	Continuity

If the continuity is not as specified, replace the door lock assembly.

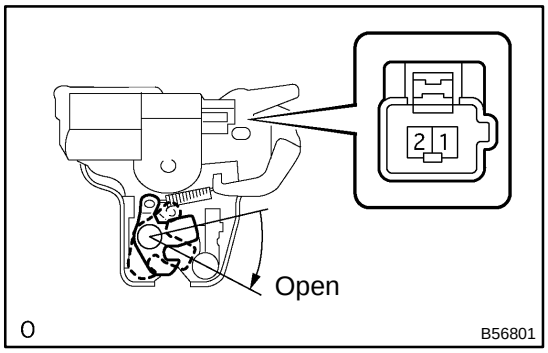

5. INSPECT LUGGAGE COMPARTMENT DOOR LOCK ASSY

(a) Inspect operation of the door lock motor.

Standard:

Measurement condition	Operation
Battery positive − Terminal 1 Battery negative − Lock body	Open

If operation is not as specified, replace the door lock assembly.

WIRELESS DOOR LOCK CONTROL SYSTEM

73085−02

ON−VEHICLE INSPECTION

1. CHECK WIRELESS DOOR LOCK CONTROL FUNCTION

HINT:

The switch described in this text is a switch for transmitting signals (LOCK switch and UNLOCK switch), built in the door control transmitter.

(a) Vehicle initial condition (conditions that allow the wireless control function to be operated)
- No key in the ignition key cylinder
- All doors closed (door open indicator off)
- All doors locked

(b) Check the basic function.
(1) Check whether the LED lights up 3 times when each switch is pressed 3 times.

HINT:

In case that the LED does not light up when the switch has been pressed 3 times or more, it may have a dead battery.

(2) In the remote control operational area, check that all the doors lock or unlock when the switch has been pressed for approximately 1 second. However, this will not happen when the key is in the ignition key cylinder or any of the doors is open.

HINT:

The UNLOCK function operates even when any of the doors is open.

(3) Check that the luggage compartment door opens when the trunk switch has been pressed for 1 second (this function operates even when a door is open).

(c) Check the automatic locking function.
(1) Check that all doors lock automatically as long as none of the doors have been opened or all doors have not been locked within approximately 30 seconds after all doors are unlocked by pressing the switch.
(2) Under the above condition, check that the automatic locking function does not operate when any of the doors has been opened or all doors have been locked within approximately 30 seconds after all doors are unlocked by pressing the switch.

(d) Check the switch operation fail−safe function.
(1) Check that doors can not be locked or unlocked by the switch while the key is in the ignition key cylinder. However, this does not apply when the system is in the recognition code registration mode.

(e) Check the chattering prevention function.
(1) Check that the corresponding operation occurs only once, and not repeated continuously while the switch is kept pressed. However, when the switch is operated repeatedly at one second intervals, check that the corresponding operation is carried out.

(f) Check the repeat function.
(1) Check that all doors attempt to automatically lock once again, 1 second after the lock switch has been pressed while the movement of the driver side door control knob, which is in the unlocked state, is being restricted.

(g) Check the operation stop function when a door is open or not completely closed.
(1) Check that doors are not locked or unlocked by the switch while the doors are open or not completely closed.

(h) Check the hazard flashing and buzzer sounding function (answer−back).
(1) Check that the hazard lights flash and also the buzzer sounds once (when locked) or twice (when unlocked) simultaneously with locking or unlocking operation of all doors, when the switch is pressed.

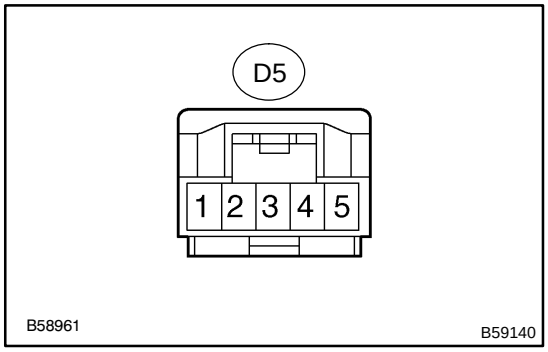

2. CHECK WIRELESS CONTROL RECEIVER

(a) Disconnect the D5 receiver connector, and check the voltage or continuity of each terminal of the wire harness side connector

Standard :

Symbols (Terminals No.)	Wiring color	Condition	Specification
GND (D5−1) ⇔ Body ground	W−B ⇔ −	Constant	Continuity
+B (D5−5) ⇔ Body ground	R ⇔ −	Constant	10 − 14 V

If the result is not as specified, there may be a malfunction on the wire harness side.

(b) Using an oscilloscope, connect the receiver connector and check the voltage.
Standard :

Symbols (Terminal No.)	Wiring color	Condition	Specification
RDA (D5−2) ⇔ Body ground	L−W ⇔ −	All doors are closed → Door control transmitter ON	Below 1 V → 6 − 7 V → Below 1 V

If the result is not as specified, there may be a malfunction on the wire harness side.

DOOR CONTROL TRANSMITTER

73084−02

REPLACEMENT

1. REGISTRATION OF RECOGINITION CODE

HINT:

- The add mode is used to register a new recognition codes while still retaining codes already registered. This mode is used to add a new transmitter. If the number of registered codes exceeds 4, the previously registered codes will be erased in order, starting from the first registered code.
- The rewrite mode is used to erase all the previously registered codes in order to register all new recognition codes. This mode is used to exchange the transmitter or the door control receiver for a new one.
- The prohibition mode is used to erase all the registered codes and disables the wireless door lock function. Use this mode when the transmitter is lost.
- The confirmation mode is used to confirm how many recognition codes have already been registered before an additional registration of the recognition codes.

(a) Make sure that the vehicle fulfills the following conditions.
  (1) No key is inserted in the ignition key cylinder.
  (2) The driver side door is opened (The other doors are closed).
  (3) The driver side door is unlocked.

(b) Select a mode.
  (1) Insert the key into the ignition key cylinder, then pull it out (Perform this operation once again within 5 seconds).
  (2) Close and open the driver side door twice.
  (3) Insert the key into the ignition key cylinder, then pull it out.
  (4) Close and open the driver side door twice.
  (5) Insert the key into the ignition key cylinder, then close the driver side door.
  (6) To select a mode, turn the ignition switch from ON to LOCK at approximately 1 second intervals according to the number of times shown below. Then remove the key from the ignition key cylinder.

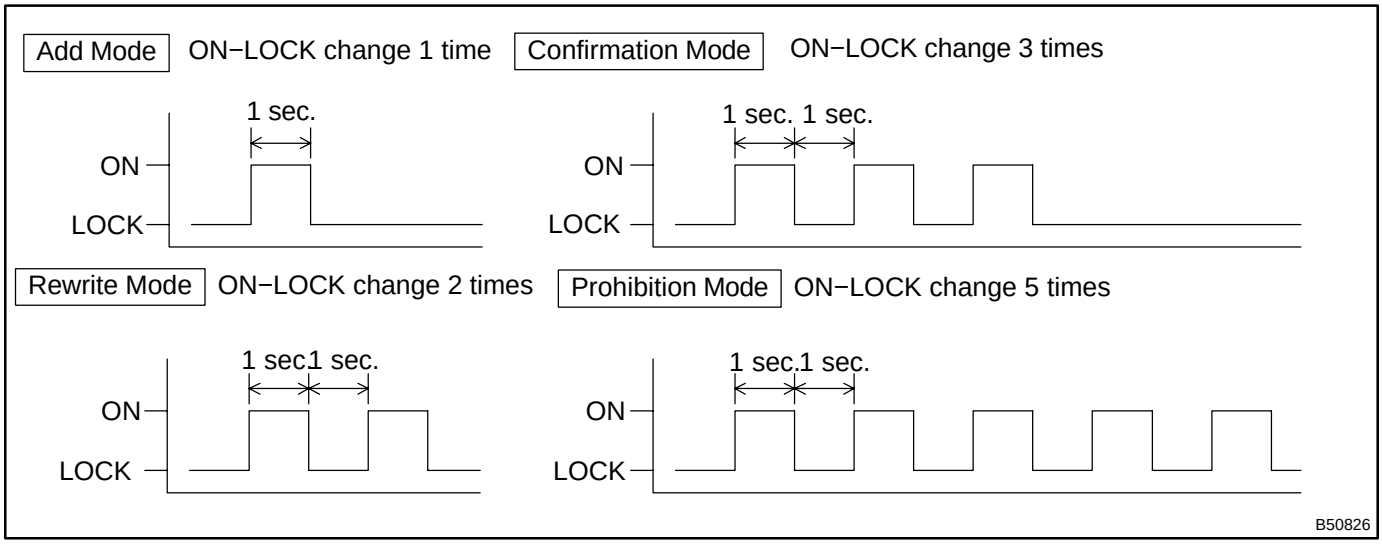

NOTICE:

- **If the number of ON−LOCK operations of the ignition switch is 4 or more than 5, the registration will end without any signs.**

(7) Within 3 seconds after a mode has been selected, the theft warning ECU automatically performs LOCK−UNLOCK operation to inform the operator which mode has been selected.

HINT:

- When the confirmation mode has been selected and 0 codes are registered, LOCK−UNLOCK operation is automatically performed 5 times.
- When the confirmation mode has been selected and LOCK−UNLOCK operation has been performed twice as shown in the illustration below, the number of the registered recognition codes is 2.

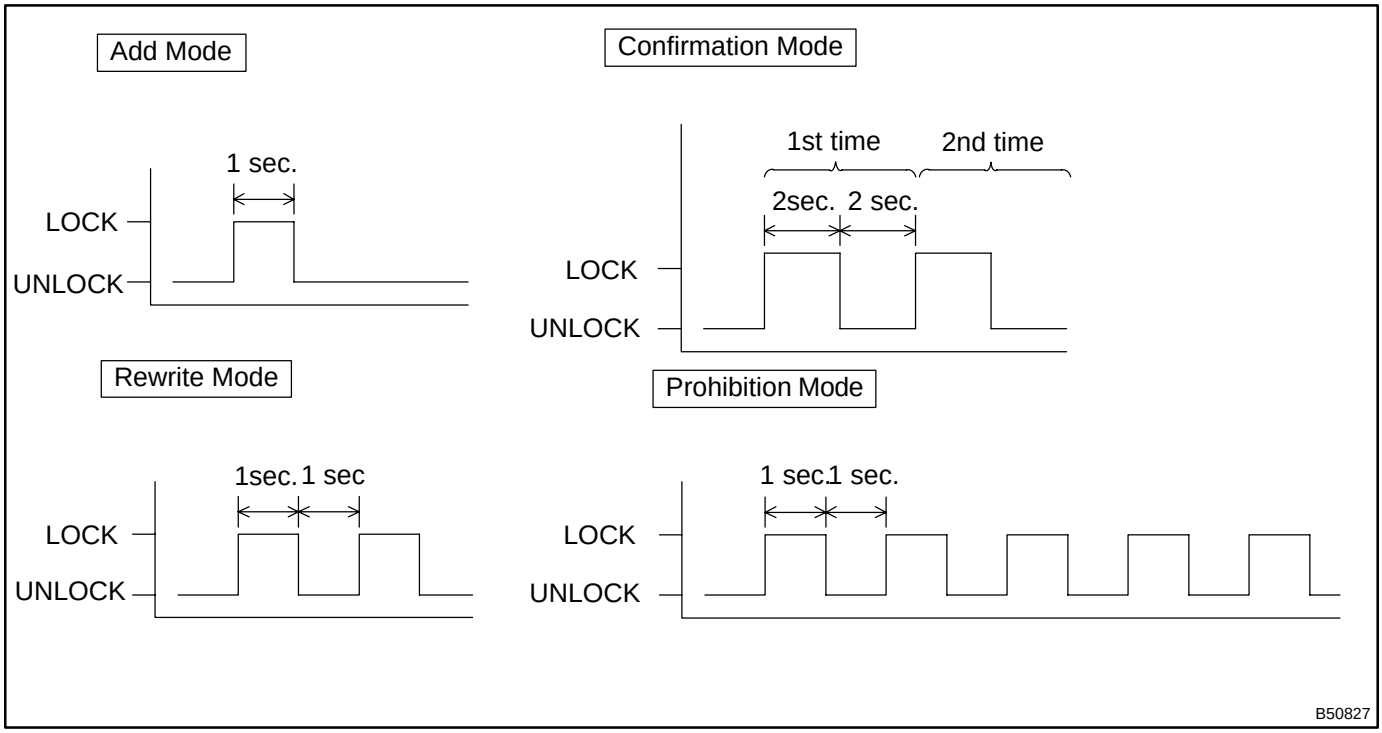

HINT:

When the prohibition mode or the confirmation mode is selected, the registration mode ends.

(c) Register the transmitter.

(1) Within 40 seconds after the add mode or the rewrite mode has been selected, simultaneously press the LOCK and UNLOCK switches twice.

NOTICE:

Press and hold both switches for 1 second or more during each press. However, the time between the 1st press and the 2nd press must be under 3 seconds.

(2) LOCK−UNLOCK operation is automatically performed once within 3 seconds after above operation (step 1), when the recognition code of the transmitter has been registered correctly. If the LOCK−UNLOCK operation is performed twice, the registration of the recognition code has failed. In this case, register the recognition code from the beginning of the registration procedures once again.

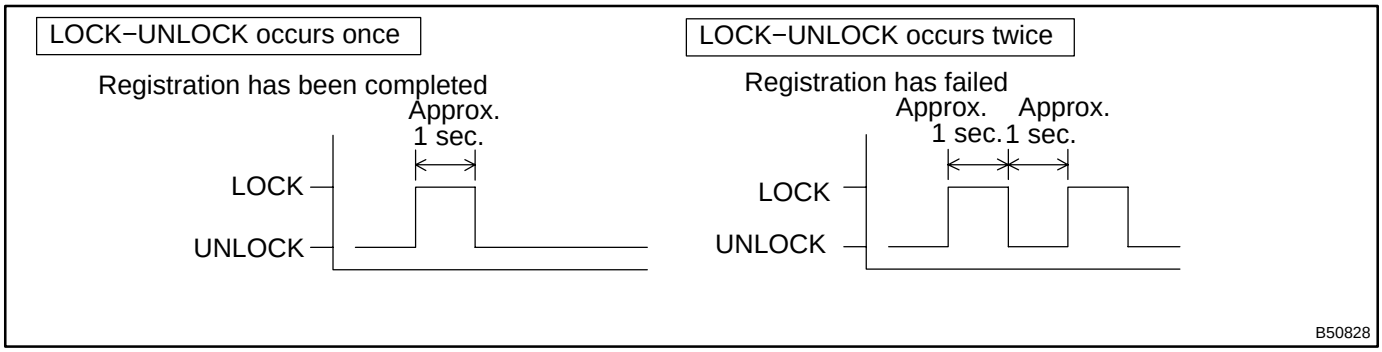

(3) In order to continue in registration mode, start the next registration within 40 seconds after the previous one.

HINT:

The maximum number of the recognition codes that can be registered is 4.

(d) If even one of the following conditions is satisfied, the registration mode will end.

(1) 40 seconds have elapsed under the condition that the registration mode is ready.

(2) The driver side door is opened

(3) The key is inserted in the ignition key cylinder.

(4) 4 recognition codes are registered at once.

KEY UNLOCK WARNING SYSTEM

PROBLEM SYMPTOMS TABLE

7307W−04

Symptom	Suspected Area	See page
Key reminder buzzer does not sound	1. Unlock warning switch	73−15
	2. Front door courtesy lamp switch	73−15
	3. Instrument panel J/B (Body ECU)	73−13
	4. Combination meter	−
	5. Wire harness	−

7307U−04

LOCATION

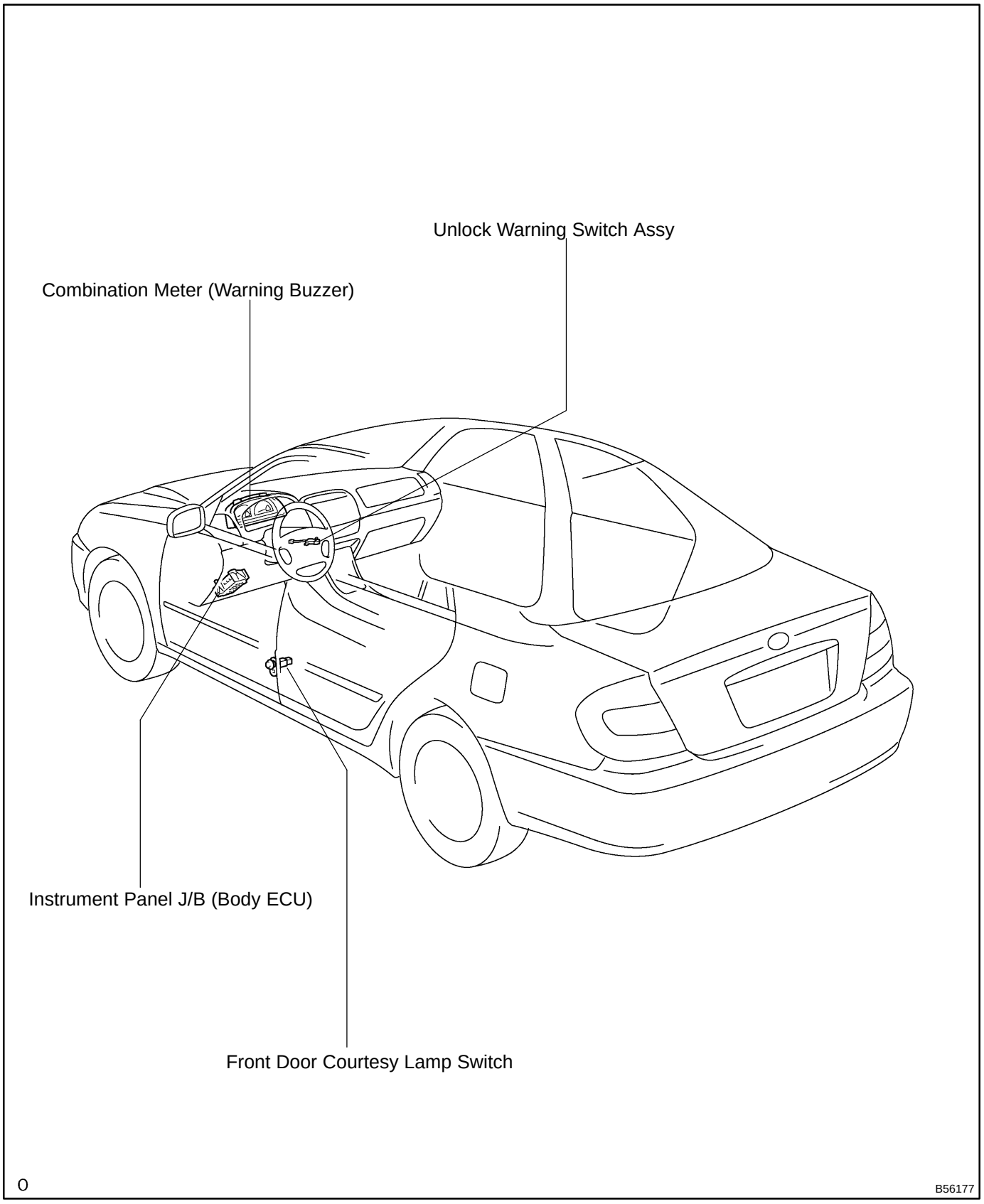

7307V−03

ON−VEHICLE INSPECTION

1. FUNCTION CHECK

(a) Check that the key reminder warning buzzer sounds.
  (1) With the driver side door closed, insert the key into the ignition key cylinder, and then turn the key to LOCK or ACC.
  (2) Then, check that the buzzer sounds intermittently after the driver side door is opened.

(b) Check that the key reminder warning buzzer stops.
  (1) Check that the buzzer stops when any of the following operations is performed while the buzzer is sounding.
    - Close the driver side door (front door courtesy lamp switch is OFF).
    - Turn the ignition switch ON.
    - Pull out the key from the ignition key cylinder.

2. CHECK INSTRUMENT PANEL JUNCTION BLOCK ASSY (BODY ECU) (LEFT SIDE)

(a) Disconnect the B6 body ECU connector.

(b) Check the continuity of the connector terminal.

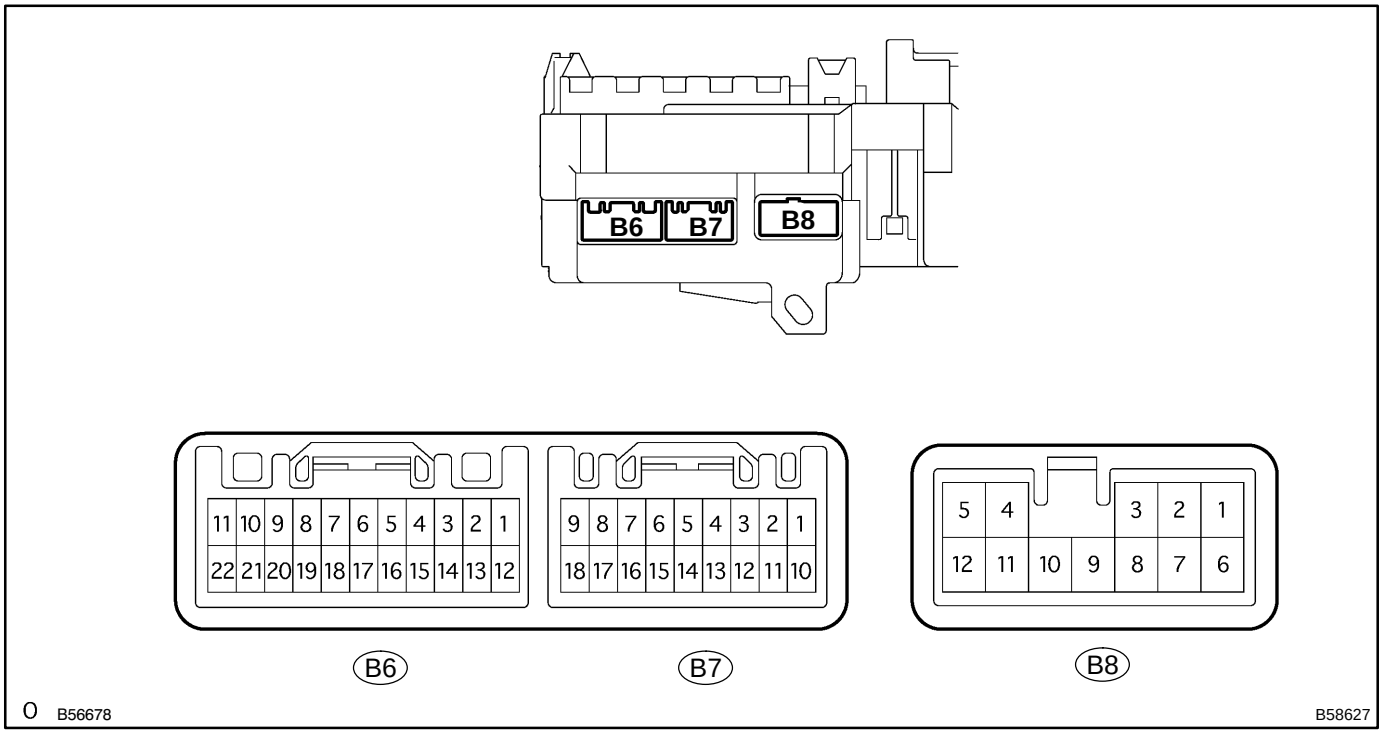

Standard:

Symbols (Terminal No.)	Wiring color	Condition	Specified condition
KSW (B6−19) ⇔ Body ground	L ⇔ −	No key in ignition key cylinder → Key inserted	No continuity→Continuity

If the continuity is not as specified, there may be a malfunction on the wire harness side.

(c) Reconnect the connector.

(d) Check the voltage of the connector terminal.

Standard:

Symbols (Terminal No.)	Wiring color	Condition	Specified condition
DCTY (B8−1) ⇔ Body ground	R−G ⇔ −	Driver side door fully closed → Opened	10 − 14 V → 0 V

If the value is not as specified, the instrument panel J/B may malfunction.

3. CHECK INSTRUMENT PANEL JUNCTION BLOCK ASSY (BODY ECU) (REAR SIDE)

(a) Disconnect the 2F and 2G connectors.

(b) Check the voltage or continuity between the connector terminals.

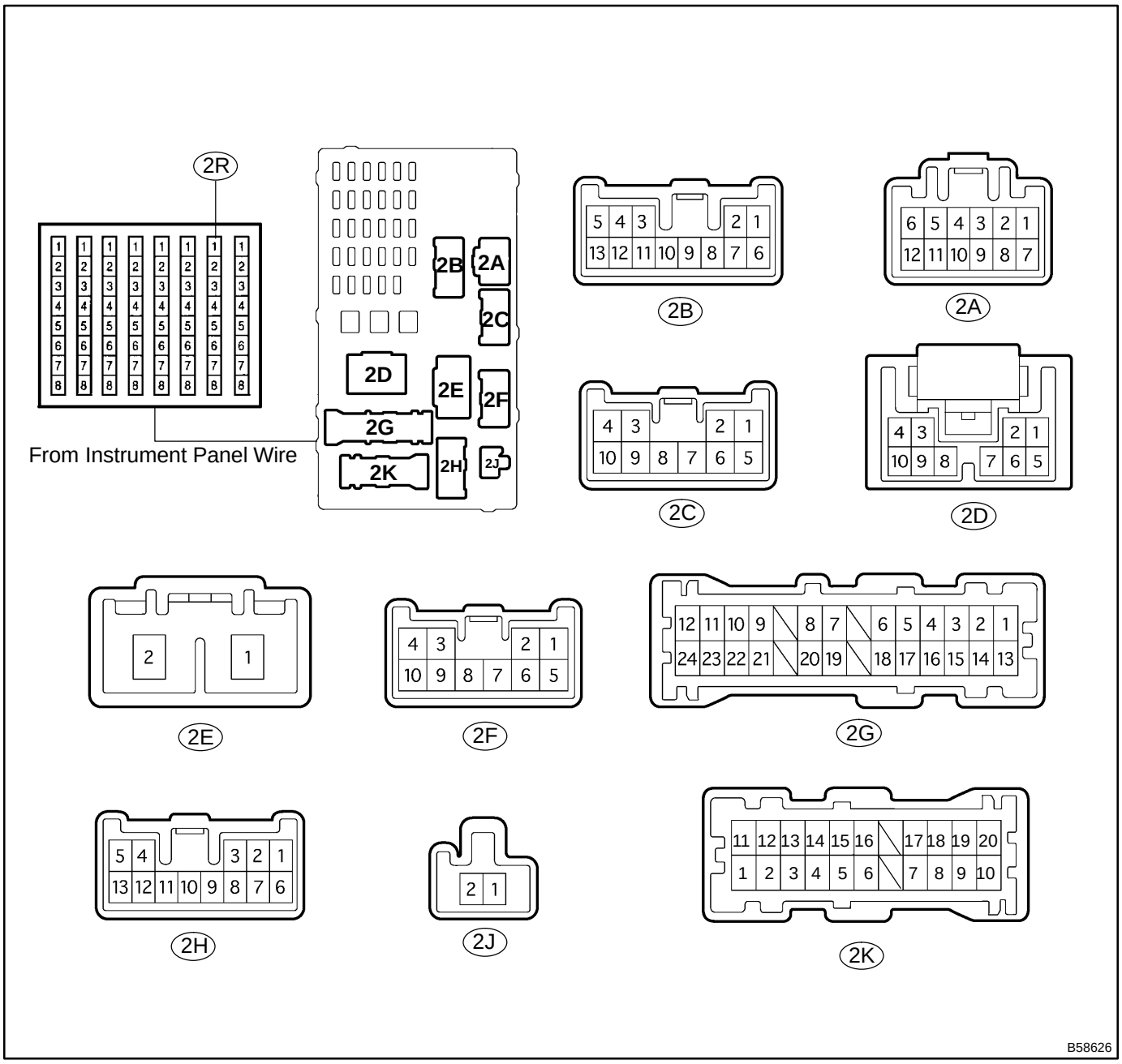

Standard:

Symbols (Terminals No.)	Wiring color	Condition	Specified condition
B (2F−7) ⇔ Body ground	R ⇔ −	Constant	10 − 14 V
BDR1 (2G−14) ⇔ Body ground	L−W ⇔ −	Constant	10 − 14 V
GND (2R−8) ⇔ Body ground	W−B ⇔ −	Constant	Continuity

If the result is not as specified, there may be a malfunction on the wire harness side.

7307X−03

INSPECTION

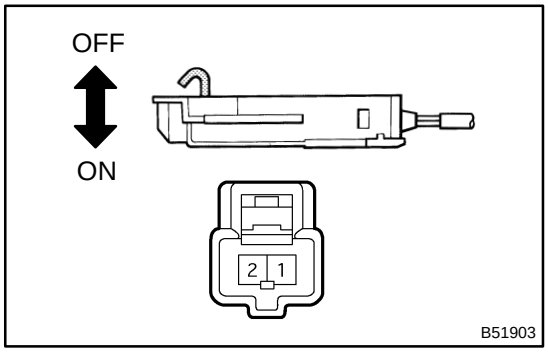

1. INSPECT UN−LOCK WARNING SWITCH ASSY

(a) Check the switch continuity.

Standard:

Terminals No.	Condition	Specification
1 ⇔ 2	Switch pressed in	Continuity
	Switch not pressed in	No continuity

If the continuity is not as specified, replace the switch.

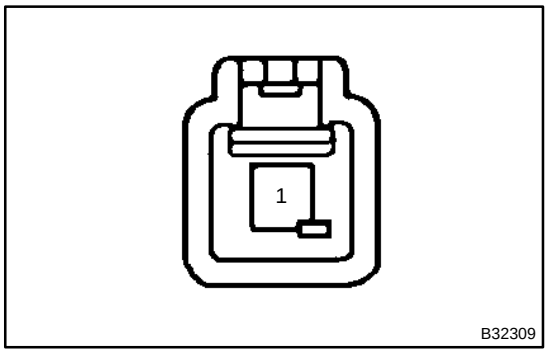

2. INSPECT FRONT DOOR COURTESY LAMP SWITCH ASSY

(a) Check the switch continuity.

Standard:

Terminals No.	Condition	Specification
1 ⇔ Switch body	FREE	Continuity
	PUSH	No continuity

If the continuity is not as specified, replace the switch.

ENGINE IMMOBILISER SYSTEM (2AZ−FE(PZEV))

730EO−07

REGISTRATION

1. DESCRIPTION OF CODE REGISTRATION

(a) When adding master keys and sub−keys (Additional registration).

(1) Register the key code (immobiliser code) in the transponder key ECU.

Target ECU	See step
Transponder key ECU	3.

(b) When replacing the transponder key ECU (New registration).

(1) Register the key code (immobiliser code) in the transponder key ECU.

Target ECU	See step
Transponder key ECU	2.

(2) Register the ECU COMMUNICATION ID between the ECM and the transponder key ECU.

Target ECU	See step
ECM	5.

(c) When replacing the ECM.

(1) Register the ECU COMMUNICATION ID between the ECM and the transponder key ECU.

Target ECU	See step
Transponder key ECU	5.

2. KEY REGISTRATION IN AUTOMATIC REGISTRATION (New Registration)

(a) The new registration of the key codes (immobiliser codes) is made automatically.

HINT:

- When you install a new transponder key ECU, the key codes (immobiliser codes) must be registered.
- A new transponder key ECU starts in the automatic key code registration mode. In this mode, a maximum of 4 key codes for 3 master keys and 1 sub−key can be registered. Since the transponder key ECU can distinguish types of keys, the registration order is not specified.

Automatic Key Code Registration (New Registration):

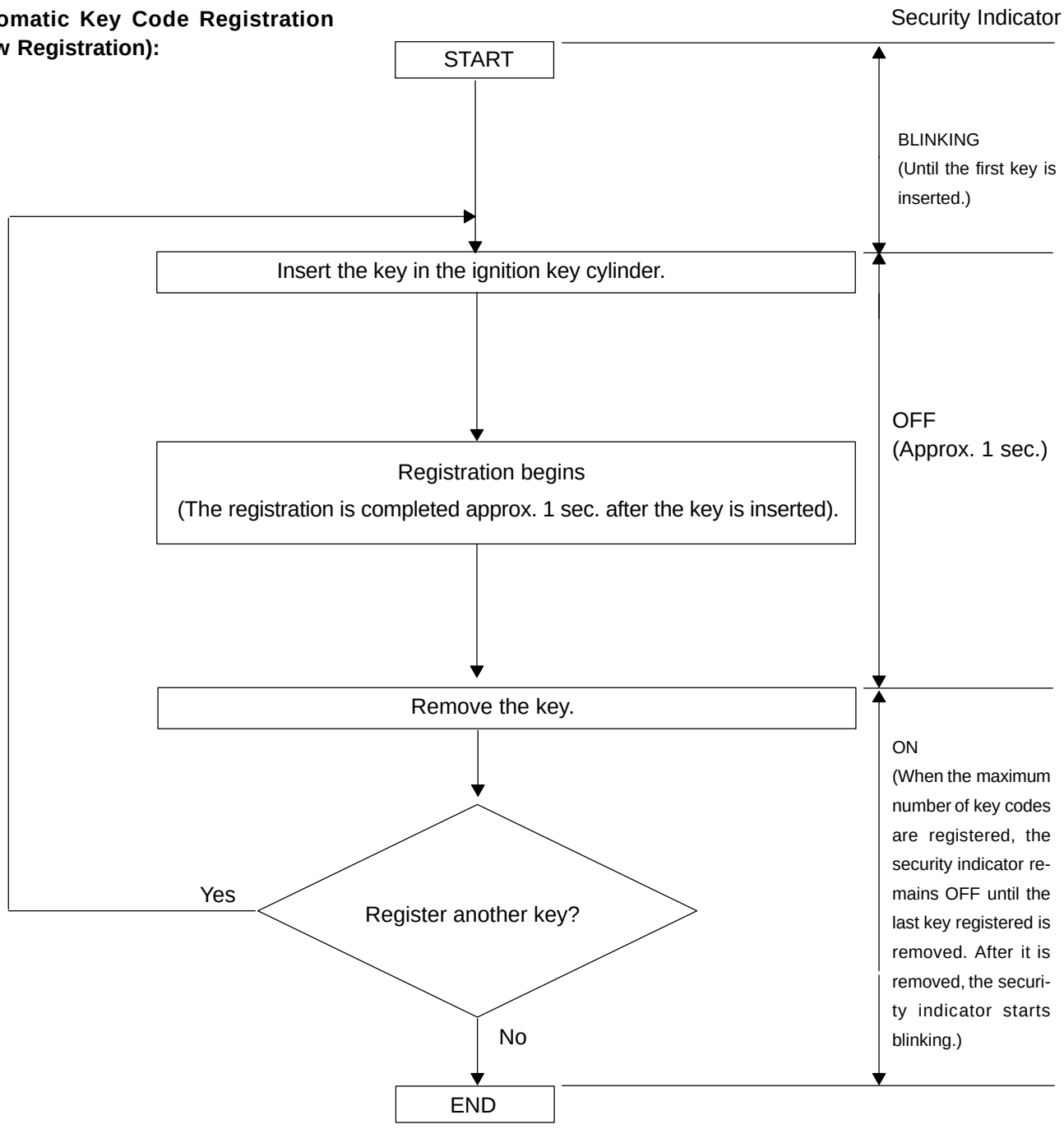

HINT:

- When no key is inserted in the ignition key cylinder in the automatic key code registration mode, the security indicator remains on.
- When the immobiliser system is operates normally and the key is pulled out, the security indicator blinks.

NOTICE:

If the key code registration has failed in the automatic key code registration mode, code 2−1 will be output from the security indicator. Trying to re−register an already registered key will cause code 2−2 to be output when the key is inserted. The output details are shown below.

Security Indicator:

Normal
(Immobiliser system is operating normally.)

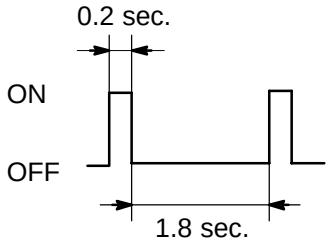

Code 2−1

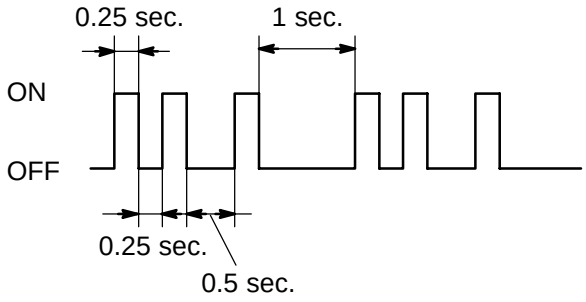

Code 2−2

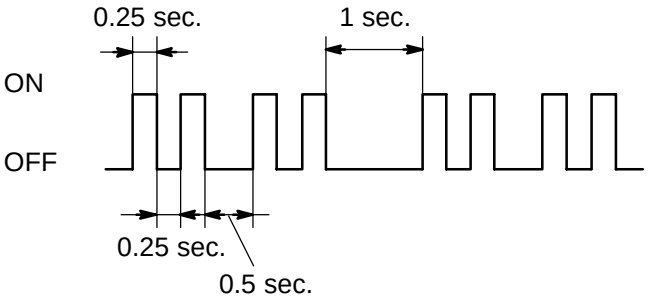

(b) Finish the automatic key code registration mode.
The automatic key code registration mode can be forced to end when at least 1 key code (immobiliser code) for the master key has been registered.

(1) Turn the ignition switch ON/OFF alternately 5 times within 10 seconds using the already registered master key.

3. REGISTRATION OF ADDITIONAL KEY (Additional Registration)

HINT:

- A maximum of 5 master key codes and 3 sub−key codes can be registered.
- Registration mode will end if each step is not completed within the specified time.
- When the ignition cylinder or the key cylinder set is replaced, remove the transmitter module from the original master key in which a transmitter is built. Then install this transmitter module to a new key and use it as master key. If necessary, use this master key to register other keys.

Additional Registration:

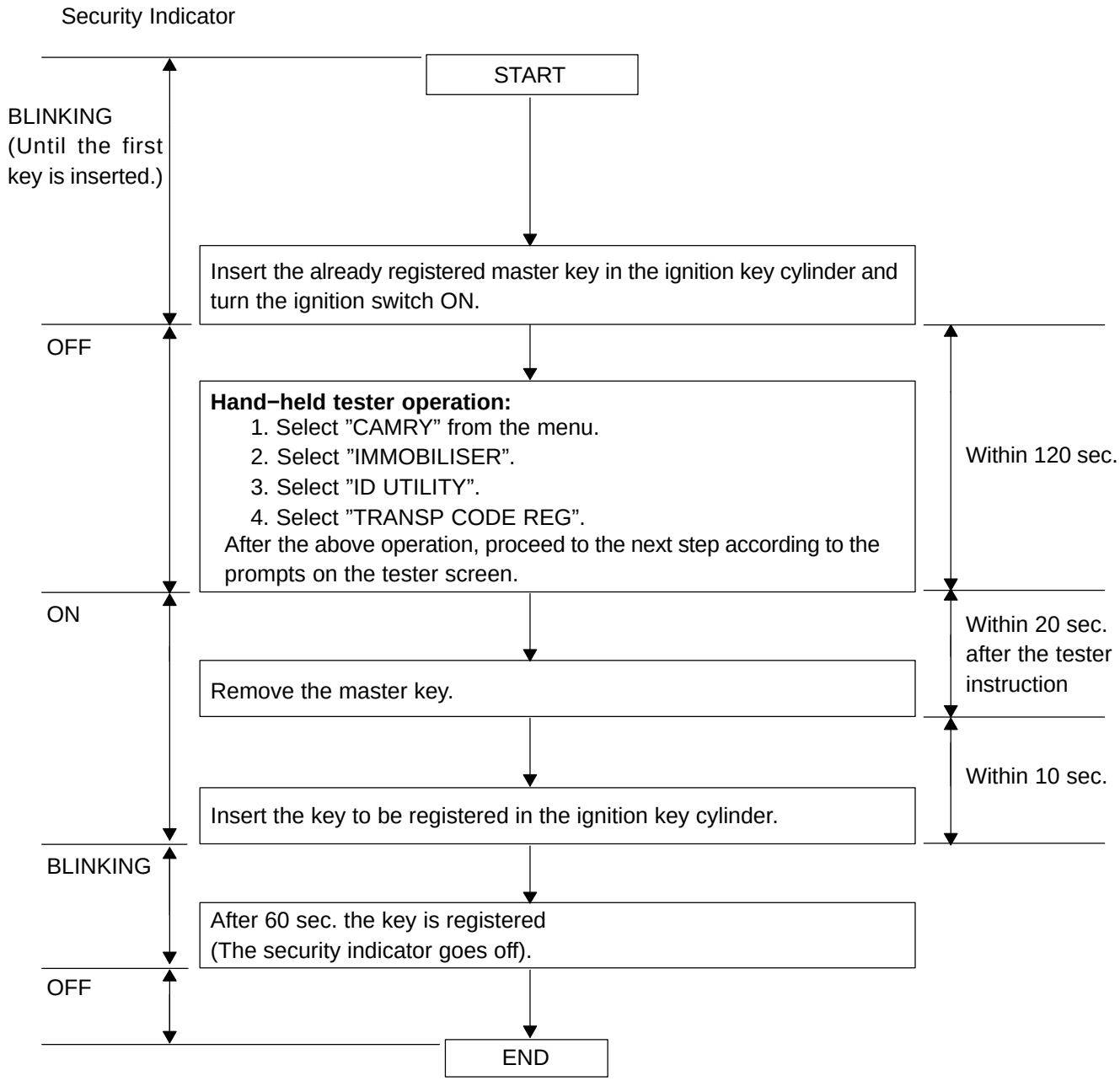

HINT:

- A brief outline of procedures for key code registration is shown on this page. For detailed information, please refer to the prompts on the screen of the hand−held tester.
- When the immobiliser system is operating normally and the key is pulled out, the security indicator blinks.

NOTICE:

If the key code registration has failed in the automatic key code registration mode, code 2−1 will be output from the security indicator. Trying to re−register an already registered key will cause code 2−2 to be output when the key is inserted. The output details are shown in step 2 (New Registration).

4. ERASURE OF KEY CODE

HINT:

- All key codes are erased except for the master key which is used for erasure operation.
  In order to use a key for which the code has been erased, it is necessary to register the key code again.
- Registration operation will be cancelled if each step is not completed within the specified time.

Erasing Key Code:

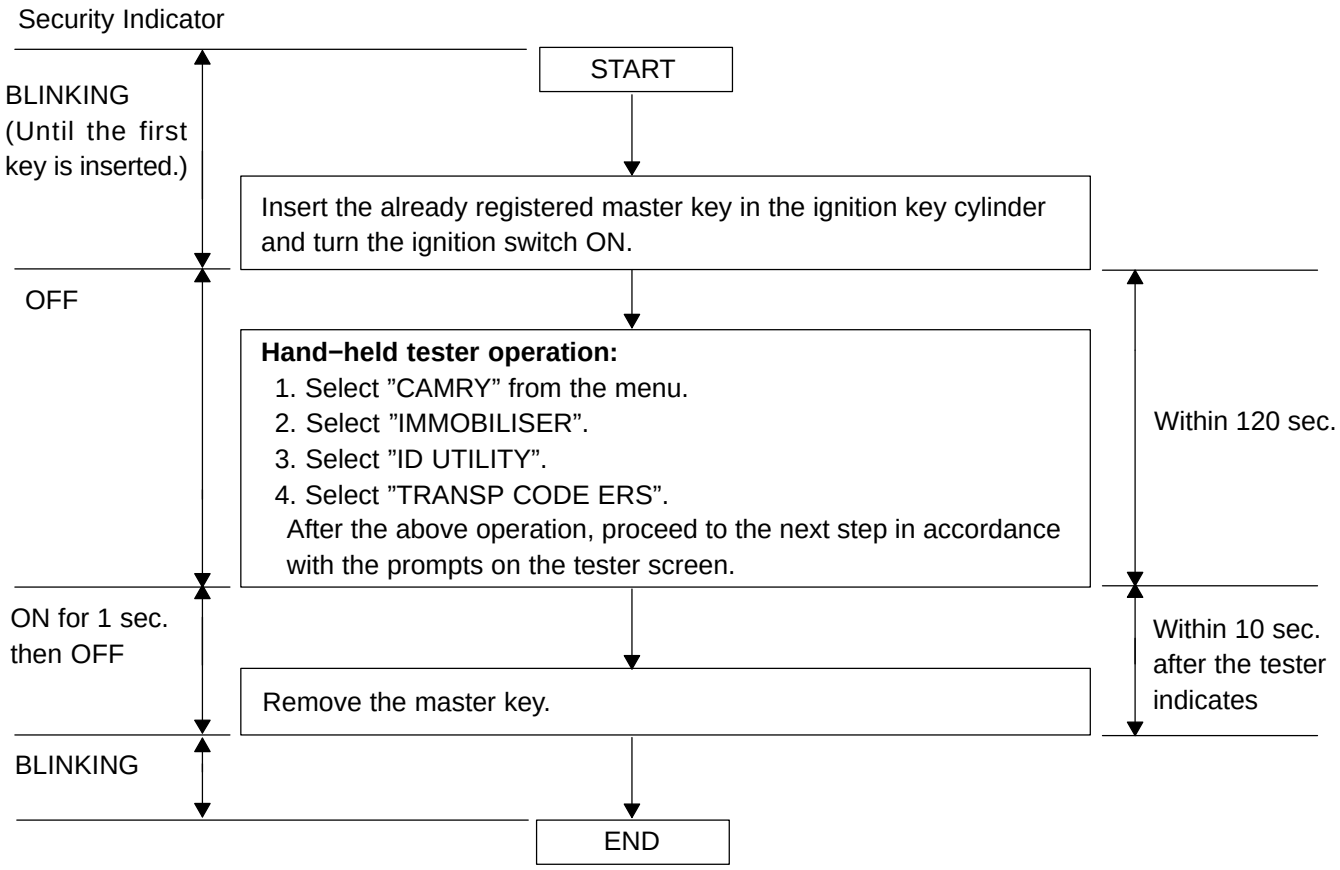

HINT:

- A brief outline of procedures for key code registration is shown on this page. For detailed information, please refer to the prompts on the screen of the hand−held tester.
- When the immobiliser system is operating normally and the key is pulled out, the security indicator blinks.

5. ECU COMMUNICATION ID REGISTRATION

NOTICE:

- **The ECU communication ID should be registered when the transponder key ECU and/or the ECM is replaced, in order to match these ECM COMMUNICATION ID.**
- **The engine cannot be started unless the ECM COMMUNICATION ID matches.**

(a) Register the ECU communication ID.

(1) After the transponder key ECU and/or the ECM is replaced, turn the ignition switch ON (the engine is not running).

(2) Short the Tc and CG terminals of the DLC3 and leave it as is for 30 minutes.

(3) Check that the engine starts.

ENGINE IMMOBILISER SYSTEM (Except 2AZ−FE(PZEV))

73086−03

REGISTRATION

1. KEY REGISTRATION IN AUTOMATIC REGISTRATION

(a) Registration of a new transponder key.

- This must be done when you install a new ECM.
- The new ECM is in the automatic key code registration mode. The number of key codes for this ECM is already fixed, and so it can be registered.
  On this type of vehicle, up to 3 key codes can be registered.
- In the automatic registration mode, the key registered last becomes the sub−key.

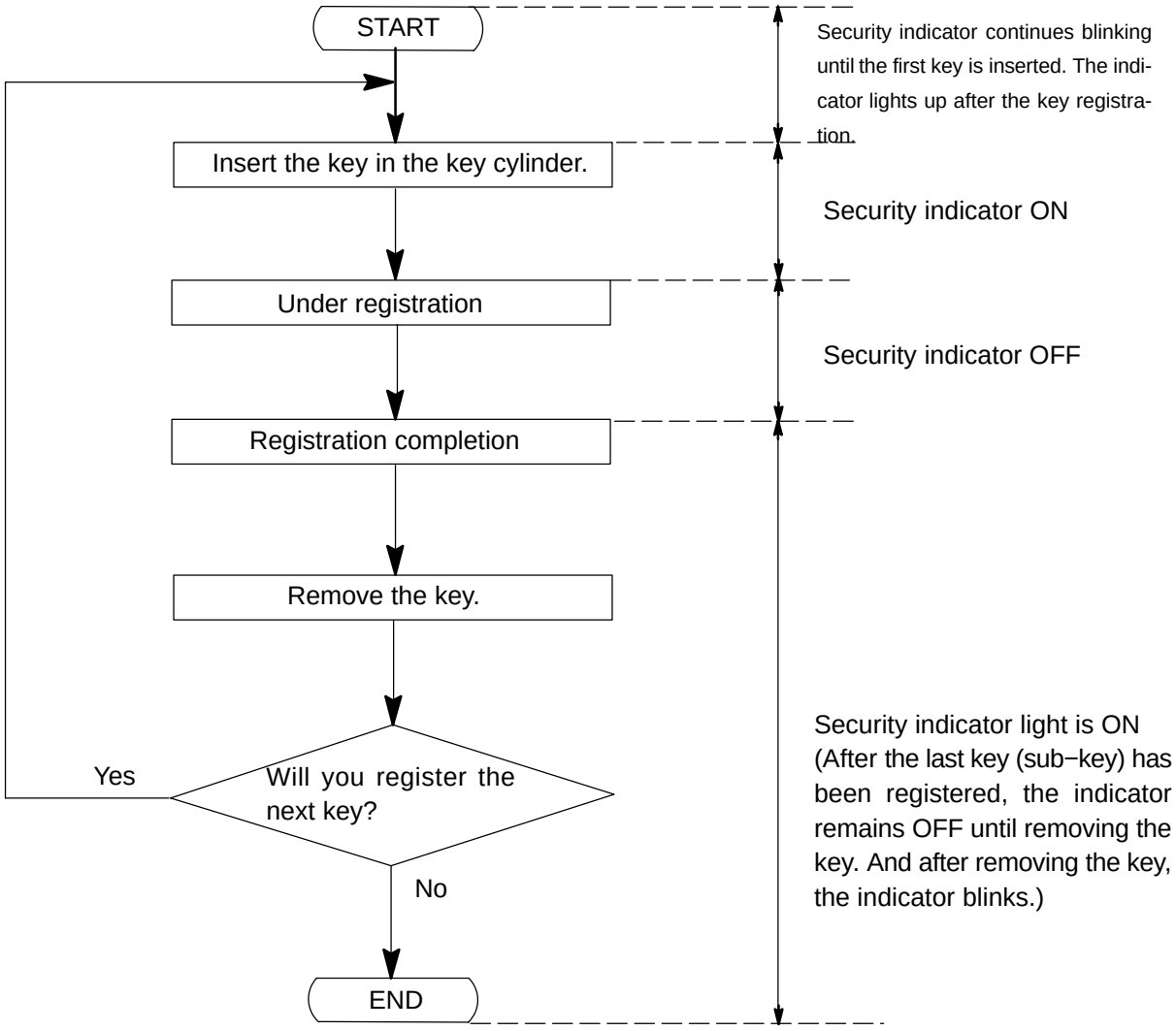

HINT:

- When no key is inserted in the key cylinder in the automatic registration mode, the security indicator always lights on.
- When the immobiliser system operates normally and the key is pull out, the security indicator blinks.
- When key code registration could not be performed in the automatic registration mode, code 2−1 is output from the security indicator. And when inserting the already registered key, code 2−2 is output.

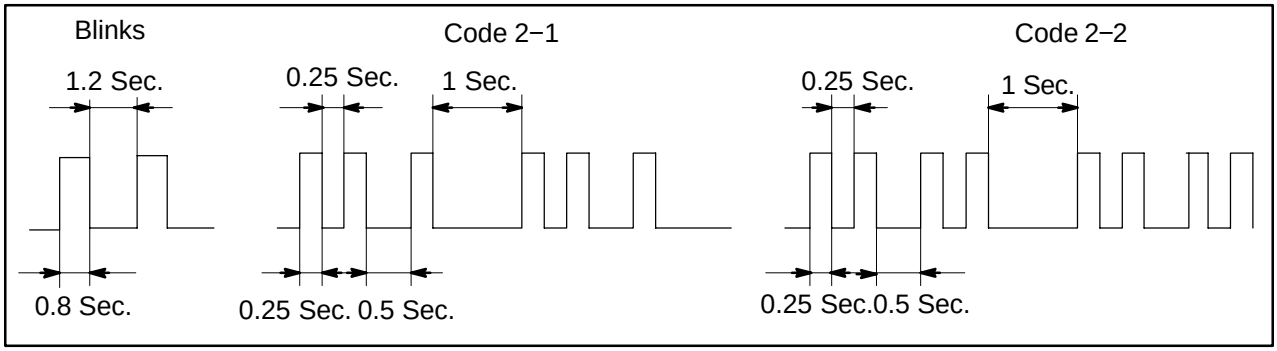

(b) Automatic registration mode completion

If finishing the mode forcibly after registering more than 1 key codes in the automatic registration mode, perform the following procedures.

After 1 more key code has been registered with the master key, perform step (1) or (2) without pulling the key out or inserting the already registered key.

(1) Depress and release the brake pedal 5 times or more within 15 seconds.

(2) With the hand−held tester, require the automatic registration mode completion.

2. REGISTRATION OF ADDITIONAL KEY

There are 2 ways for registration of additional master key; one way is depressing the brake pedal and acceleration pedal and the other way is using the hand−held tester.

HINT:

- It is possible to register up to 7 master key codes including the already registered key code.
- When any operation time described below is over, registration mode will be stopped forcibly.
- When the next procedure is started while the timer is working, the timer stops working, then the next timer starts.
- When replacing ”Ignition Cylinder Key Set” or ”Lock Cylinder Set” and register according to the following procedure using the original master key. However, after the registration of the additional master key, the original master key and the original sub−key are not necessary any more, and there fore registration of those key codes should be deleted.

  (1) Depressing the brake pedal and acceleration pedal:

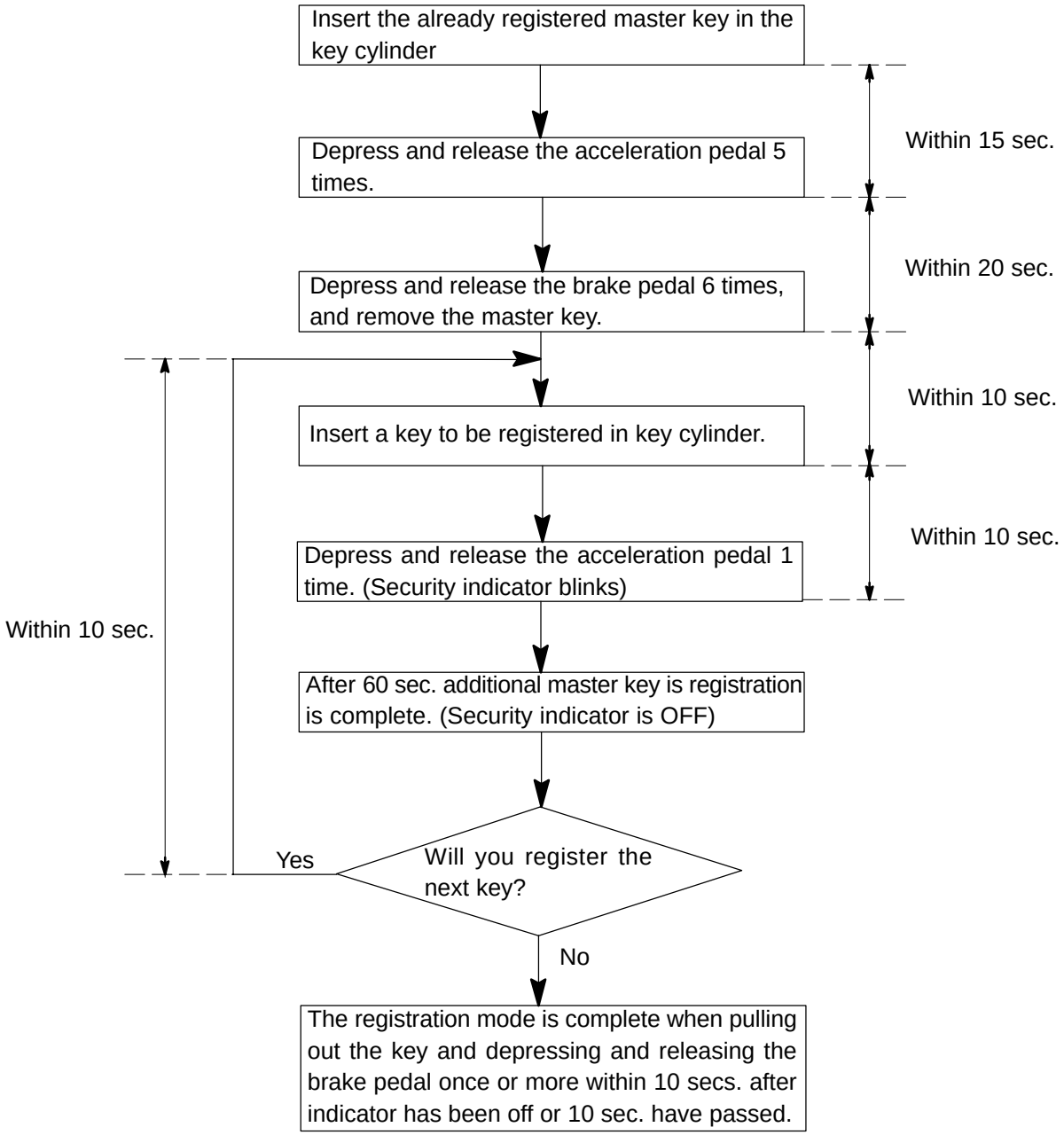

(2) Using the hand−held tester:

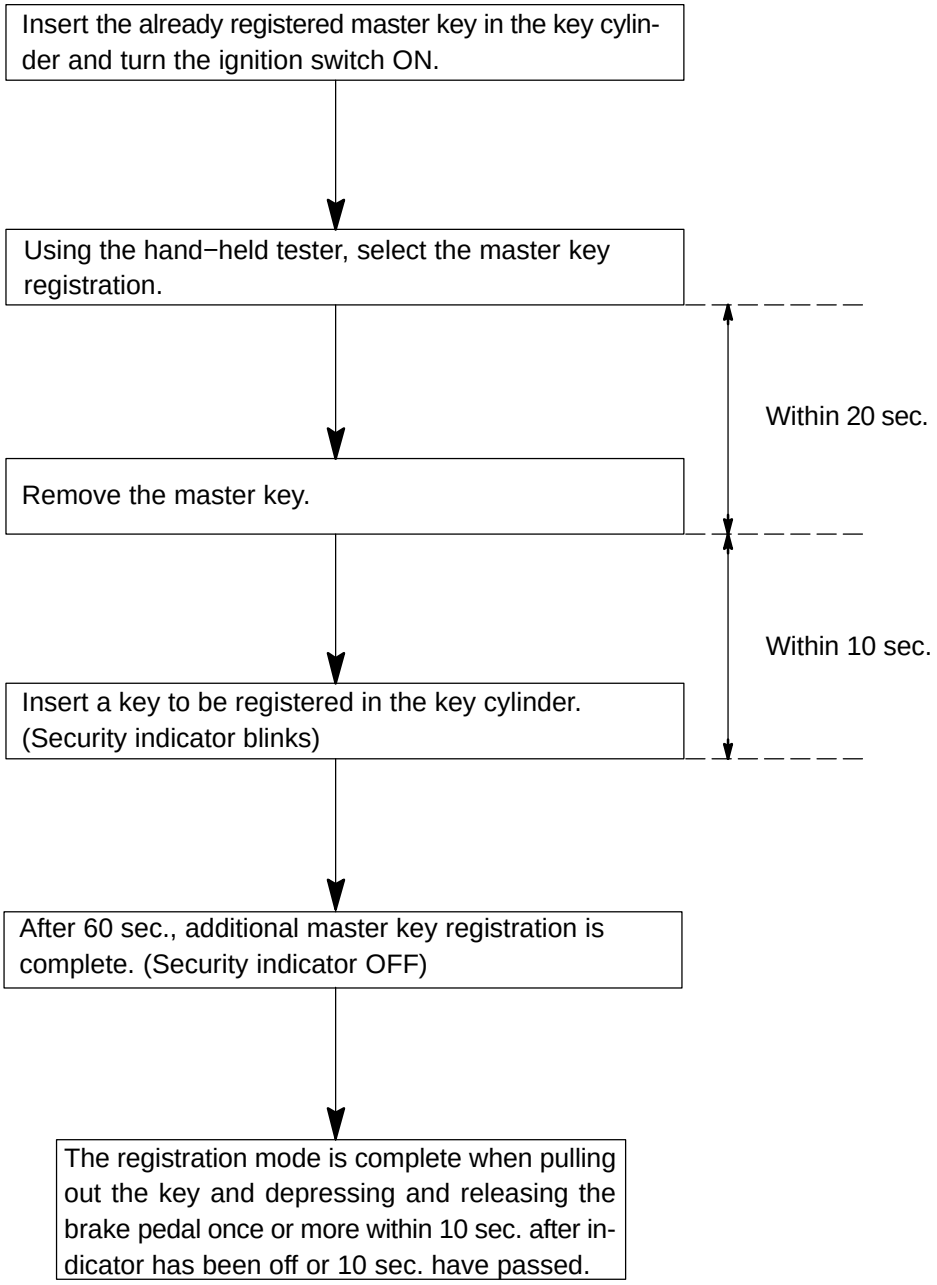

HINT:
Follow the screen of the hand−held tester for more detailed procedure.

3. ERASURE OF KEY CODE

There are 2 ways for erasure of transponder key codes; one way is depressing the brake pedal and acceleration pedal and the other way is using hand−held tester.

HINT:

- Delete all the other master and sub−key codes than a master key code to use the erasing operation. When using the key which was used for deletion, it is necessary to register the code again.
- When any operation time described below is over, registration mode will be stopped forcibly.
- When the next procedure is started while the timer is working, the timer stops working, then the next timer starts.

(1) Depressing the brake pedal and acceleration pedal:

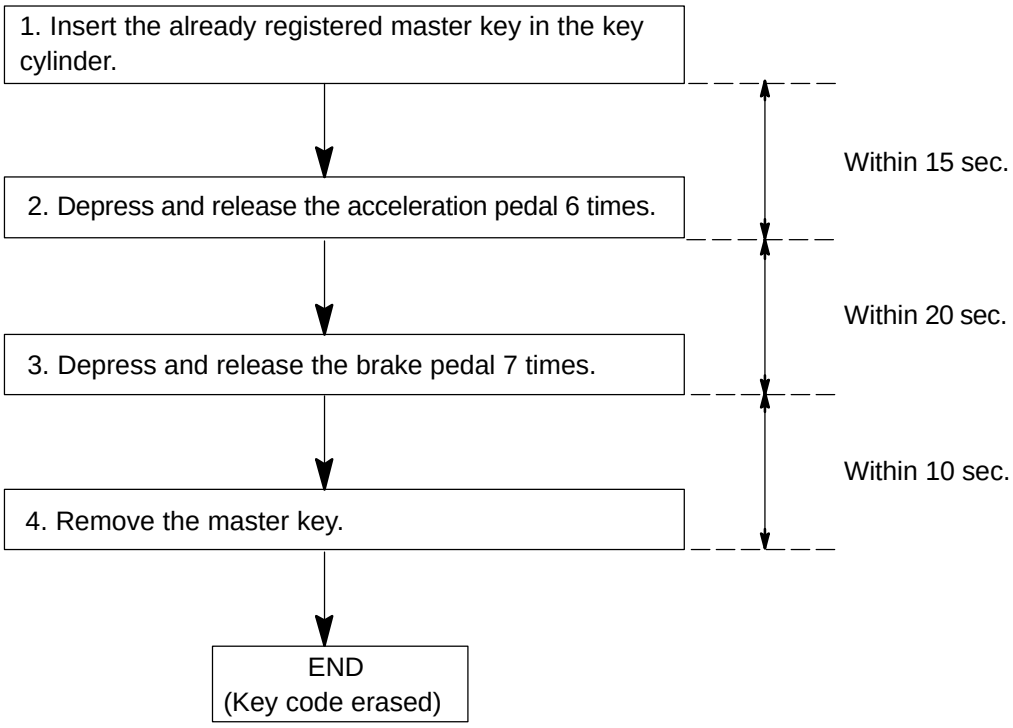

HINT:

When the key cannot be pulled out in step 4, key code deletion is canceled.

(2) Using the hand−held tester:

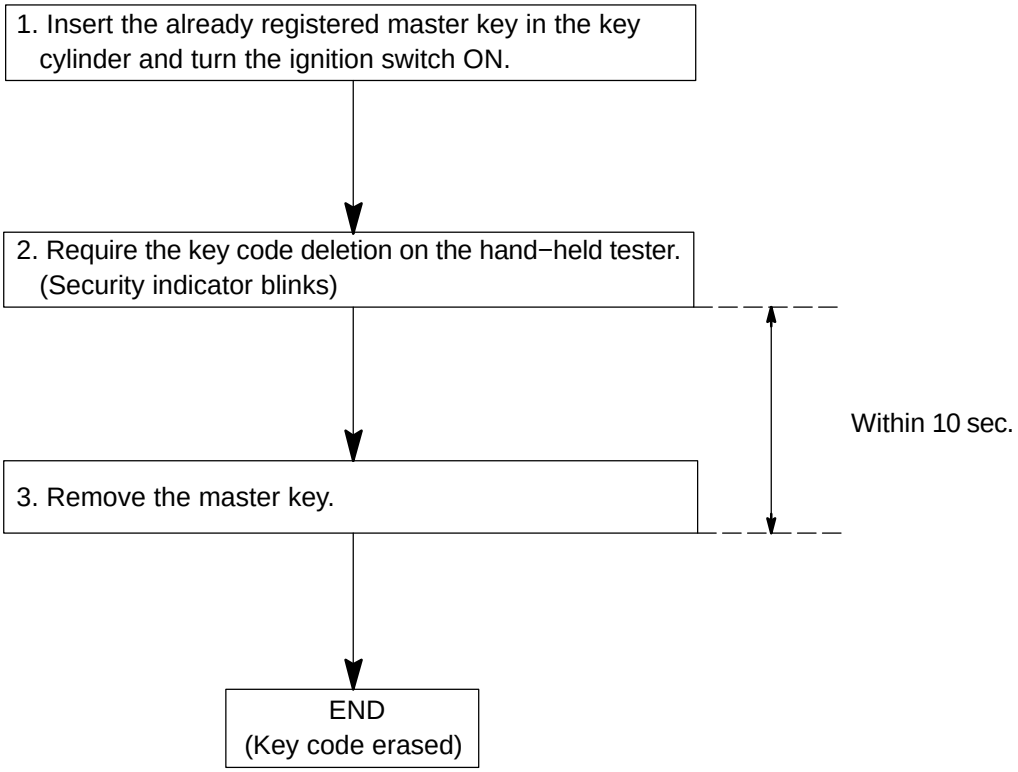

HINT:

- When the key cannot be pulled out in step 3, key code deletion is canceled. (Security indicator is OFF.)
- Follow the screen of the hand−held tester for more detailed procedure.

THEFT DETERRENT SYSTEM

7307L−02

ON−VEHICLE INSPECTION

1. OUTLINE OF THEFT DETERRENT SYSTEM

(a) When the theft deterrent system detects that the vehicle is being tampered with, the system sets off the alarm, causing the horns to sound and the lights to light up or blink in order to alert people around the vehicle to the theft.

(b) The theft deterrent system has 2 modes; one is active arming mode and the other is passive arming mode. Passive arming mode can be switched ON/OFF by the specified method (See step 6).

(c) Each mode has 4 states; disarmed state, arming preparation state, armed state, alarm sounding state.

(1) Disarmed state:

The alarm function is not operating.
The theft deterrent system is not operating.

(2) Arming preparation state:

The time until the system goes into the armed state.
The theft deterrent system is not operating.

(3) Armed state:

The theft deterrent system is operating.

HINT:

If the vehicle remains in a condition that sets off the alarm (any door remains open, engine hood remains open, luggage compartment door remains open, ignition switch remains directly connected) after the alarm ends, the alarm will be set off repeatedly a maximum of 10 times for every one of the above specified conditions.

Alarm time: (60 sec. ± 5 sec.) x 10

(4) Alarm sounding state:
When the theft deterrent system detects that the vehicle is being tampered with while in the armed state, the system causes the horns to sound and the lights to light up or blink in order to alert people around the vehicle to the theft.
Refer to the table below for the alarm method and time:

Alarm Method	Headlight	Blinking (cycle of 0.4 sec.)
	Taillight	Blinking (cycle of 0.4 sec.)
	Hazard Warning Light	Blinking (cycle of flasher relay)
	Room Light	Illuminating
	Vehicle Horn	Sounding (cycle of 0.4 sec.)
	Theft Deterrent Horn	Sounding (cycle of 0.4 sec.)
Alarm Time	60 sec. ± 5 sec. (maximum 10 times)	

HINT:
If either of the doors is unlocked and there is also no key in the ignition key cylinder during the armed state, a forced door lock signal will be output (See step 4).

2. ACTIVE ARMING MODE

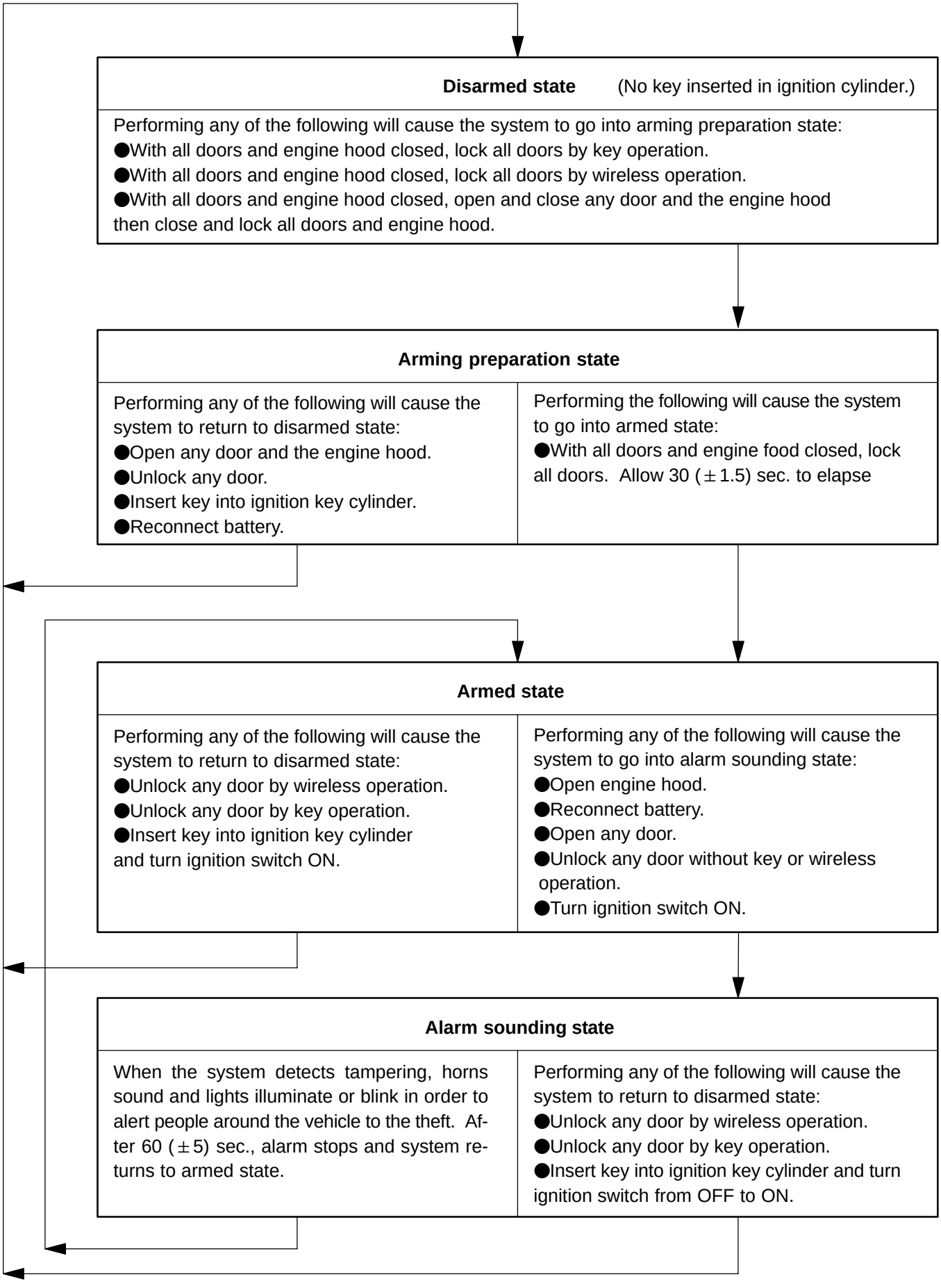

3. PASSIVE ARMING MODE

Passive arming mode can be switched ON/OFF by the specified method (See step 6).
The mode set initially (shipped from factory) is active arming mode (not passive arming mode).
During passive arming mode, the theft deterrent system goes into the armed state even if the doors are not locked.
Passive arming mode starts the alarm control after the key is removed from the ignition key cylinder and the doors are closed.
Detecting that the doors are unlocked does not set off the alarm during passive arming mode.
A forced door lock signal is not output during passive arming mode (See step 4).
When the theft deterrent system detects that the doors are opened during passive arming mode, the alarm is not set off immediately because an entry delay time is set.
If either of the following conditions is fulfilled during passive arming mode, the theft deterrent system will switch to active arming mode.

With all doors and engine hood closed, lock all doors by key operation.
With all doors and engine hood closed, lock all doors by wireless operation.
With all doors and engine hood closed, open and close any door and the engine hood then close and lock all doors and engine hood.

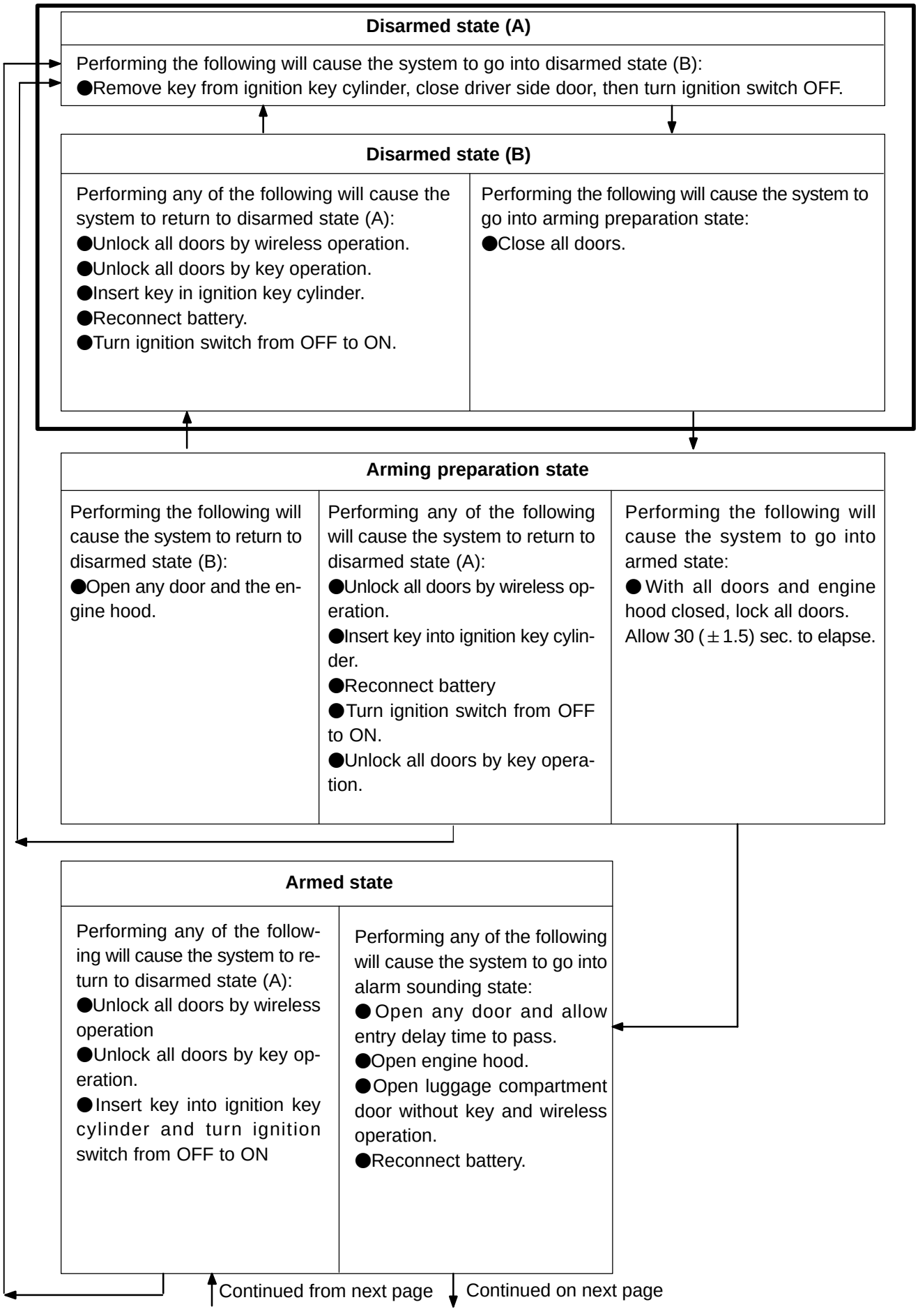
Disarmed state (A)
Performing the following will cause the system to go into disarmed state (B):
●Remove key from ignition key cylinder, close driver side door, then turn ignition switch OFF.
Disarmed state (B)
Performing any of the following will cause the system to return to disarmed state (A):
●Unlock all doors by wireless operation.
●Unlock all doors by key operation.
●Insert key in ignition key cylinder.
●Reconnect battery.
●Turn ignition switch from OFF to ON.
Performing the following will cause the system to go into arming preparation state:
●Close all doors.
Arming preparation state
Performing the following will cause the system to return to disarmed state (B):
●Open any door and the engine hood.
Performing any of the following will cause the system to return to disarmed state (A):
●Unlock all doors by wireless operation.
●Insert key into ignition key cylinder.
●Reconnect battery
●Turn ignition switch from OFF to ON.
●Unlock all doors by key operation.
Performing the following will cause the system to go into armed state:
● With all doors and engine hood closed, lock all doors.
Allow 30 (±1.5) sec. to elapse.
Armed state
Performing any of the following will cause the system to return to disarmed state (A):
●Unlock all doors by wireless operation
●Unlock all doors by key operation.
● Insert key into ignition key cylinder and turn ignition switch from OFF to ON
Performing any of the following will cause the system to go into alarm sounding state:
● Open any door and allow entry delay time to pass.
●Open engine hood.
●Open luggage compartment door without key and wireless operation.
●Reconnect battery.
Continued from next page
Continued on next page

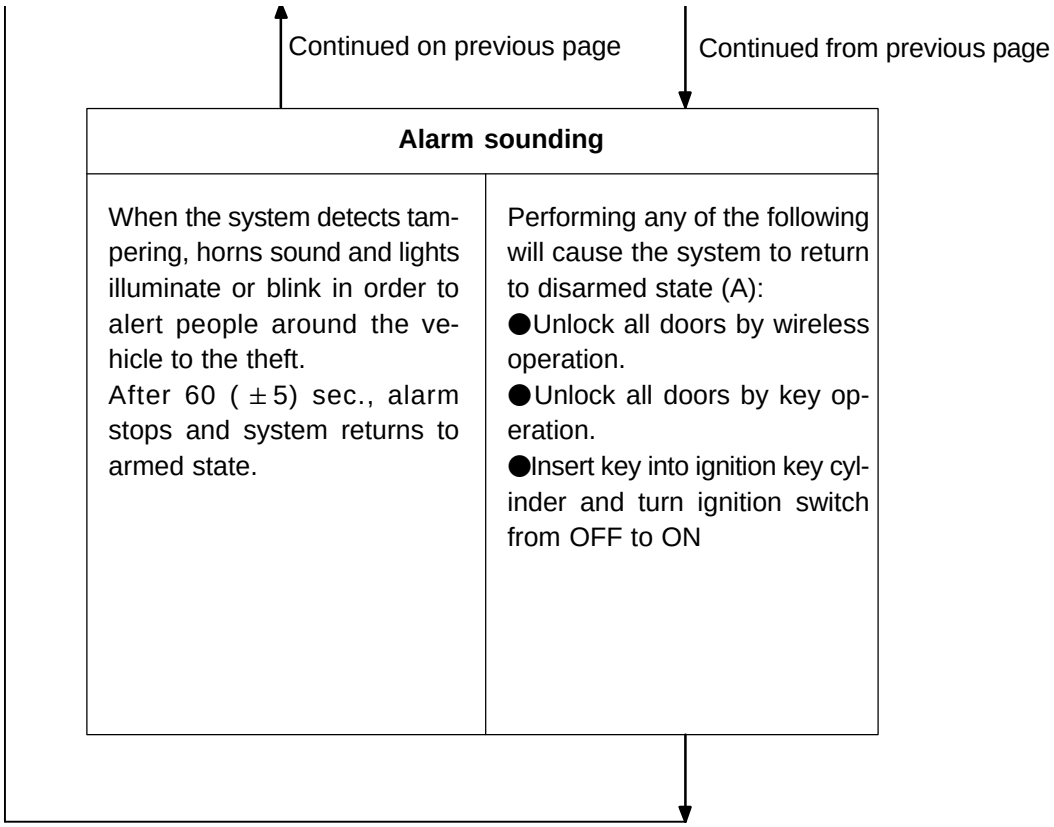

*3: When any door is opened while all the doors are closed during the armed state in passive arming mode, the entry delay time starts. If the switch condition (armed state → disarmed state) is fulfilled during the entry delay time, the theft deterrent system will return to the disarmed state. However, if the switch condition to the disarmed state is not fulfilled, the theft deterrent system will recognize it as a theft and go into alarm sounding state.
Entry delay time of 0, 14 or 30 sec. can be selected by the customizing function.

4. FORCED DOOR LOCK CONTROL

(a) The forced door lock control prevents the vehicle from being tampered with. Immediately after a door is unlocked (alarm starts), the door is forced to lock by a forced door lock signal.

(1) Conditions that force the doors to lock:

When no key is in the ignition key cylinder and 0.4 second has elapsed after the previous output of a forced door lock signal, the doors will be forced to lock if any of the following conditions is fulfilled.

The theft deterrent system is in the armed state of active arming mode.

All the doors are locked. → Any door is unlocked.

Any door is unlocked state.

5. SECURITY INDICATOR LIGHT OUTPUT

(a) The theft deterrent ECU outputs a signal to light up the security indicator light, according to the state of the theft deterrent system. However, some of the actual lighting conditions of the security indicator light are different from the outputs of the theft deterrent ECU.

	Security indicator light	
State of theft deterrent system*1	Output signals from the theft deterrent ECU	Actual lighting condition
Disarmed state	OFF	**OFF** (Immobiliser system unset) **BLINKING** (Immobiliser system set)
Arming preparation state	ON	**ON**
Armed state	OFF	**BLINKING**
Alarm sounding state	ON	**ON**

*1: Common to active arming mode and passive arming mode

Blinking cycle:

Time	Security indicator light
0.2 sec.	ON
1.8 sec.	OFF

HINT:

When the immobiliser system is set, the security indicator light blinks during the disarmed state and the armed state, due to the output signals from the immobiliser system.

6. CHANGING METHOD OF PASSIVE MODE (ON or OFF)

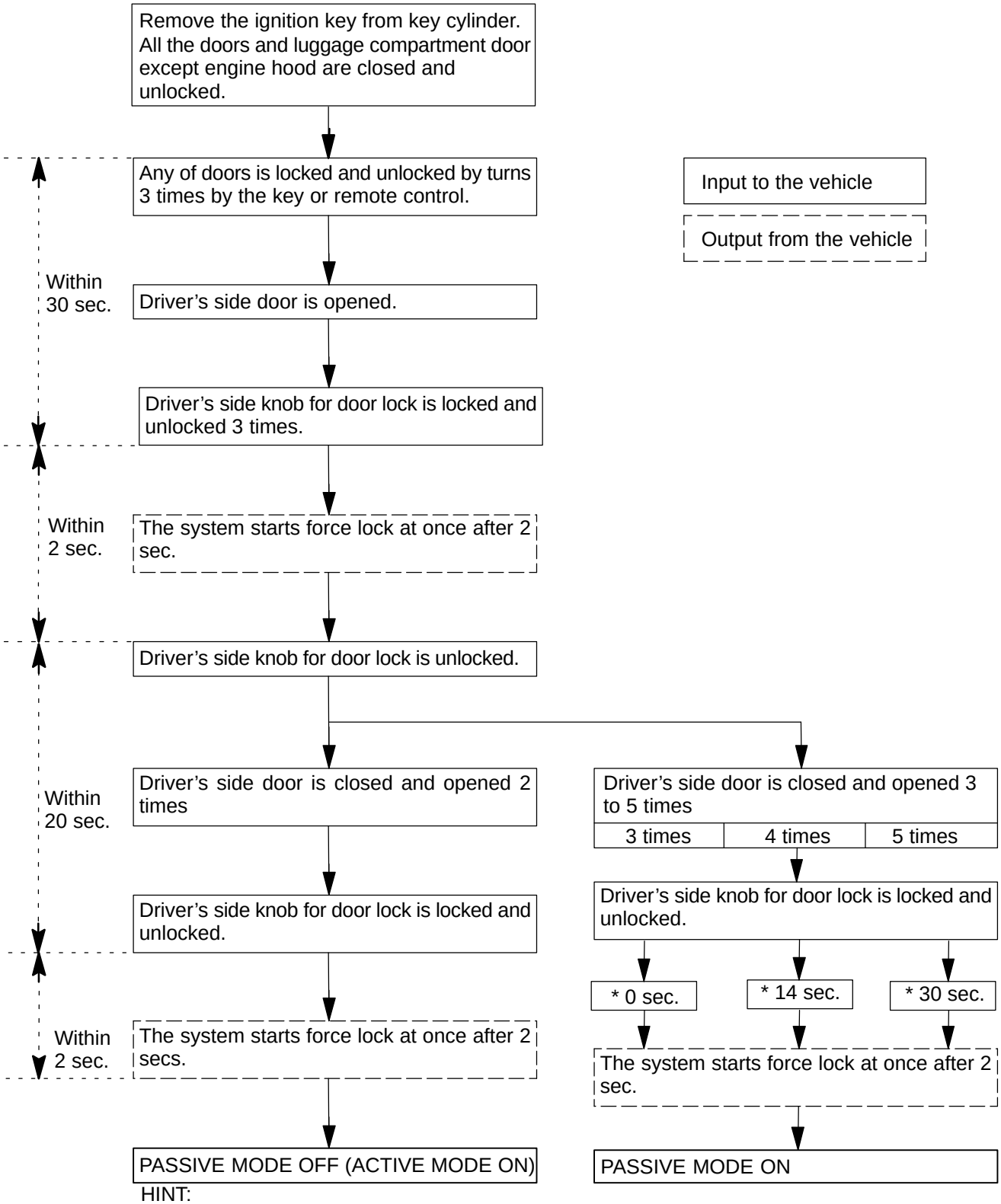

HINT:
- Initial mode is PASSIVE MODE OFF.
- If the ignition switch is turned ON, changing operation will be canceled.

*: Entry delay time

SLIDING ROOF SYSTEM

LOCATION

7403Y−03

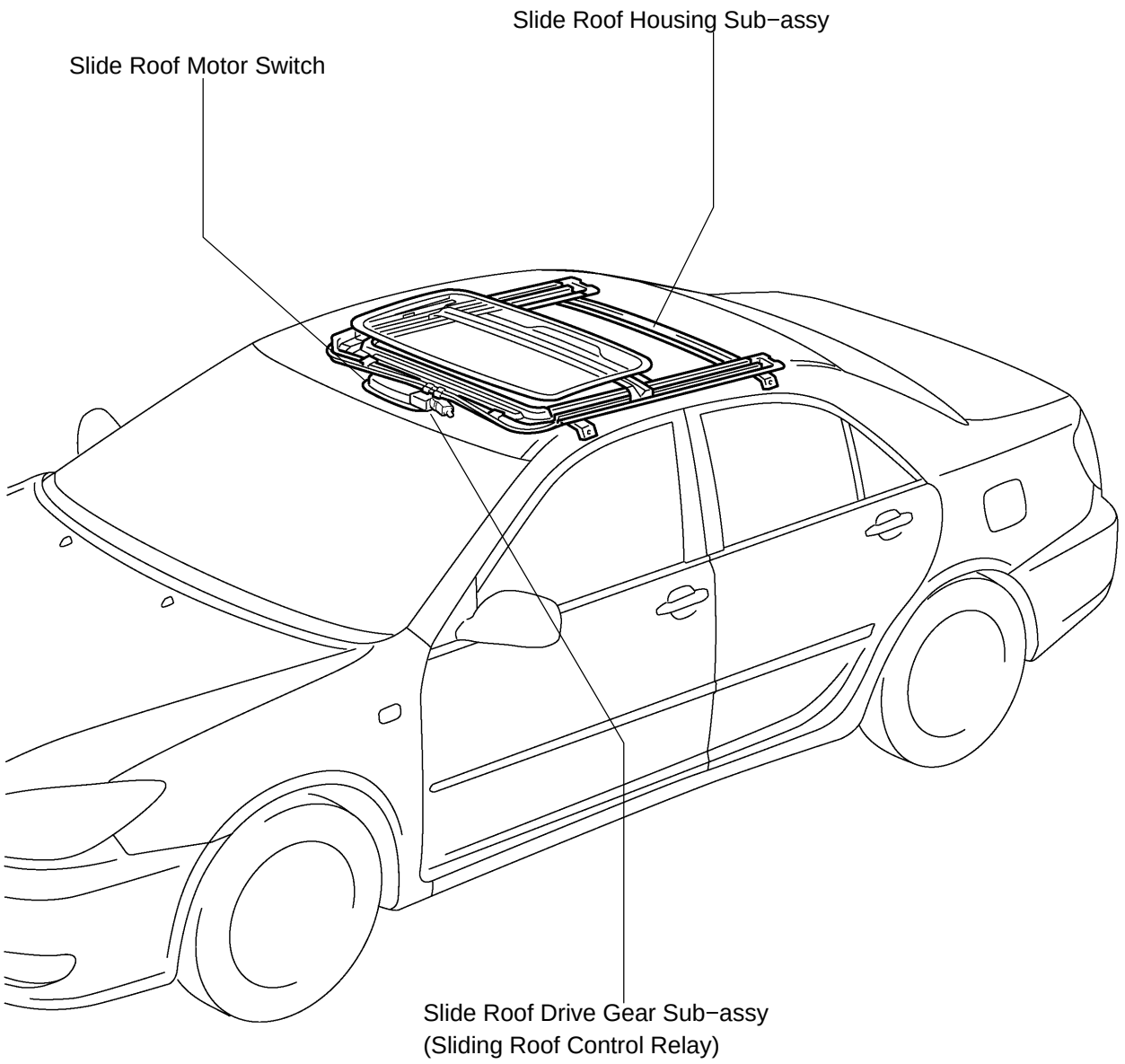

B56178

74040−03

PROBLEM SYMPTOMS TABLE

Symptom	Suspected Area	See page
Sliding roof system does not operate	1. PWR NO.1 fuse	−
	2. Sliding roof motor switch	74−6
	3. Sliding roof drive gear	74−3
	4. Wire harness	74−3
	5. Faulty sliding of sliding roof	−
Sliding roof operation is abnormal	1. Sliding roof motor switch	74−6
	2. Sliding roof drive gear	74−3
	3. Wire harness	−
Sliding roof system stops operation halfway (No foreign object is caught in the motor)	1. Sliding roof motor switch	74−6
	2. Sliding roof drive gear	74−3
	3. Wire harness	−
	4. Sliding roof relay	74−7

7403Z−03

ON−VEHICLE INSPECTION

1. INSPECTION SLIDING ROOF FUNCTION

(a) Check the AUTO sliding open operation function.
  (1) Turn the ignition switch ON.
  (2) Slide close and tilt down the roof glass to the fully closed position.
  (3) Check that the roof glass automatically slides open and stops just before the roof glass is fully opened by operating the sliding roof switch OPEN for 0.3 seconds or more.

(b) Check the AUTO sliding close operation function.
  (1) Turn the ignition switch ON.
  (2) Check that the roof glass automatically slides close to the fully closed position by operating the sliding roof switch CLOSE for 0.3 seconds or more.
  (3) The roof glass stops sliding when the sliding roof switch is operated CLOSE or OPEN while the glass is moving.

(c) Check the AUTO tilting UP operation function.
  (1) Turn the ignition switch ON.
  (2) Slide close and tilt down the roof glass to the fully closed position.
  (3) Check that the roof glass automatically tilts up to the fully up position by operating the sliding roof switch UP for 0.3 seconds or more.

(d) Check the AUTO tilting DOWN operation function.
  (1) Turn the ignition switch ON.
  (2) Check that the roof glass automatically tilts down by operating the sliding roof switch DOWN when the roof glass is in the up position.

(e) Check the operation function after key−OFF.
  (1) After turning the ignition switch from ON to OFF, check that the roof glass can be operated via the sliding roof switch. However, operation is disabled after either of the front doors is opened.
  (2) When approximately 45 seconds have passed after the ignition switch is turned from ON to OFF, check that the roof glass can not be operated via the sliding roof switch.
  (3) After turning the ignition switch from ON to OFF with either of the front doors open, check that AUTO operation stops immediately.

(f) Check the jam protection function.

NOTICE:

- **Do not check this function using a part of your body such as a hand.**
- **Pay thorough attention that nothing gets caught by accident in this process.**
- **The roof might be deformed if something hard, such as a handle of hammer, is inserted in between.**

HINT:

The jam protection functions operate only during the following AUTO operations; AUTO close or AUTO down operation and AUTO close or AUTO down operation after key−OFF.

  (1) Fully close the roof glass.
  (2) Insert the handle of the hammer when the roof glass is almost in the fully closed position.

HINT:

Wrap the hammer handle well with cloth or something before use.

(3) When trying to operate the roof glass to the fully closed position via the AUTO close or down function, check that the glass movement is reversed by detecting the handle, so that the hammer handle is not caught

HINT:

- The reverse movement when the roof glass is sliding close stops when the glass slides open 200 mm or before the glass reaches the fully open position (for a maximum 20 seconds).
- The reverse movement when the roof glass is tilting down stops when the glass is in the fully up position or 2 seconds have passed.

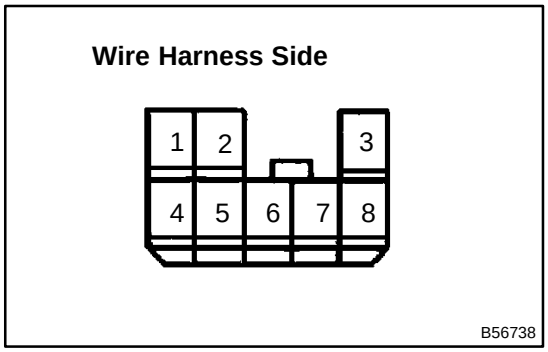

2. INSPECT SLIDING ROOF RELAY AND SWITCH (TMMK MADE)

(a) Inspect the sliding roof relay and switch.

(1) Disconnect the connector from the sliding roof relay and inspect the connector on the wire harness side.

Standard:

Terminals No.	Wiring color	Condition	Specified condition
5 ⇔ Body ground	W−B ⇔ −	Constant	Continuity
7 ⇔ 5	L−W ⇔ W−B	Constant	10 − 14 V
3 ⇔ 5	R−L ⇔ W−B	Ignition switch OFF → ON	0 V → 10 − 14 V
1 ⇔ 5	R−W ⇔ W−B	Sliding roof switch → OPEN or DOWN	No continuity → Continuity
2 ⇔ 5	R−Y ⇔ W−B	Sliding roof switch → CLOSE or UP	No continuity → Continuity

If the value is not as specified, there may be a malfunction on the wire harness side.

(2) Connect the connector, and inspect the voltage between the terminals of the connector.

Standard:

Terminals No.	Wiring color	Condition	Specified condition
1 ⇔ 5	R−W ⇔ W−B	Ignition switch OFF → ON Sliding roof switch → OPEN or DOWN	10 − 14 V → 0 V
2 ⇔ 5	R−Y ⇔ W−B	Ignition switch OFF → ON Sliding roof switch → CLOSE or UP	10 − 14 V → 0 V

If the value is not as specified, the sliding roof drive gear may be defective.

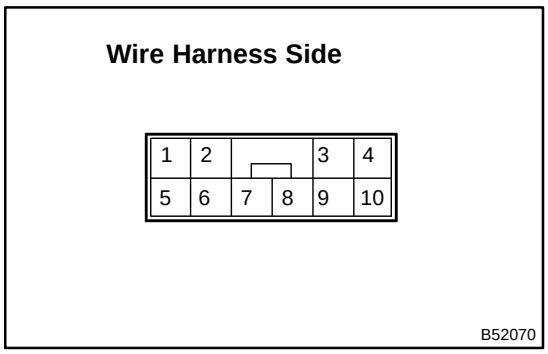

3. INSPECT SLIDING ROOF CONTROL ECU (TMC MADE)

(a) Inspect the sliding roof control ECU.

(1) Disconnect the connector from the ECU.

(2) Inspect the connector on the wire harness side.

Standard:

Symbols (Terminals No.)	Wiring color	Condition	Specified condition
E (7) ⇔ Body ground	W−B ⇔ −	Constant	Continuity
B (5) ⇔ E (7)	L−W ⇔ W−B	Constant	10 − 14 V
IG (8) ⇔ E (7)	R−L ⇔ W−B	Ignition switch OFF → ON	0 V → 10 − 14 V
DWN (9) ⇔E (7)	R−W ⇔ W−B	Sliding roof switch → OPEN or DOWN	No continuity → Continuity
UP (10) ⇔ E (7)	R−Y ⇔ W−B	Sliding roof switch → CLOSE or UP	No continuity → Continuity

If the value is not as specified, there may be a malfunction on the wire harness side.

(3) Connect the connector, and inspect the voltage between the terminals of the connector.

Standard:

Symbols (Terminals No.)	Wiring color	Condition	Specified condition
DWN(9) ⇔ E (7)	R−W ⇔ W−B	Ignition switch OFF → ON Sliding roof switch → OPEN or DOWN	10 − 14 V → 0 V
UP(10) ⇔ E (7)	R−Y ⇔ W−B	Ignition switch OFF → ON Sliding roof switch → CLOSE or UP	10 − 14 V → 0 V

If the value is not as specified, sliding roof drive gear or communication line may be defective.

74041−03

INSPECTION

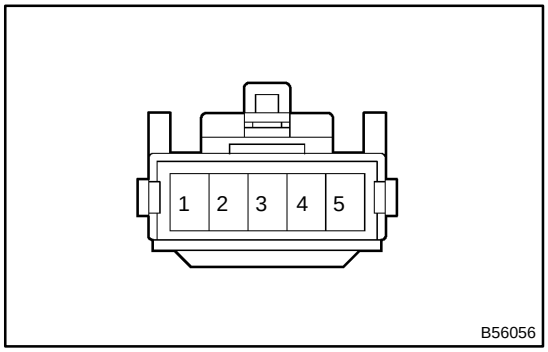

1. INSPECT SLIDE ROOF MOTOR SWITCH

(a) Check the slide roof motor switch continuity.

Standard:

Terminals No.	Switch position	Specified condition
2 ⇔ 4	CLOSE/UP	Continuity
2 ⇔ 3	OPEN/DOWN	Continuity

If the continuity is not as specified, replace the switch.

7404C−03

RESET

1. RESET SLIDING ROOF POSITION

NOTICE:

When the battery negative (−) terminal is disconnected or PWR No.1 fuse is removed due to the repair, the sliding roof position memory is erased. After reconnecting the battery negative (−) terminal, make sure to reset the zero point.

If the sliding roof has not been reset, the sliding roof AUTO operation functions will not operate.

Vehicle type	Condition	Proceed to
TMC made CAMRY	●Battery negative (−) terminal is disconnected. ●Component parts of sliding roof are replaced. ●PWR No.1 fuse is removed.	Reset A
	●Sliding roof dose not stop at the fully closed position even if AUTO close switch is operated.	Reset B
TMMK made CAMRY	●Battery negative (−) terminal is disconnected. ●PWR No.1 fuse is removed.	Reset A
	●Component parts of sliding roof are replaced. ●Sliding roof dose not stop at the fully closed position even if AUTO close switch is operated.	Reset C

(a) Reset A

(1) To reset the sliding roof to the zero point, push and hold the switch on the TILT UP position until the sliding roof tilts all the way up and tilts down a little automatically.

(2) Confirm ”one−touch side open and close” and ”one−touch tilt up and down” functions by pushing the switch briefly to the SLIDE/OPEN position and TILT/UP position.

(b) Reset B

(1) Push and hold the switch on the TILT UP/CLOSE position until the sliding roof stops.

(2) Continue to push and hold the switch on the TILT UP/CLOSE position for 10 seconds or more. The sliding roof closes to the fully closed position.

(3) Continue to push and hold the switch on the TILT UP/CLOSE position until the sliding roof tilts all the way up and tilts down a little automatically.

(4) Confirm ”one−touch side open and close” and ”one−touch tilt up and down” functions by pushing the switch briefly to the SLIDE/OPEN position and TILT/UP position.

(c) Reset C

(1) To reset the sliding roof to the zero point, push and hold the switch on the TILT UP position until the sliding roof tilts all the way up and tilts down a little automatically.

(2) Release the switch. Within 5 seconds, re−push and hold the switch on the TILT UP/CLOSE position.

(3) The sliding roof automatically moves to the fully open position and then reverses towards the closed position.

(4) Release the switch.

(5) Confirm ”one−touch side open and close” and ”one−touch tilt up and down” functions by pushing the switch briefly to the SLIDE/OPEN position and TILT/UP position.

SLIDING ROOF (TMC Made)

74044−03

COMPONENTS

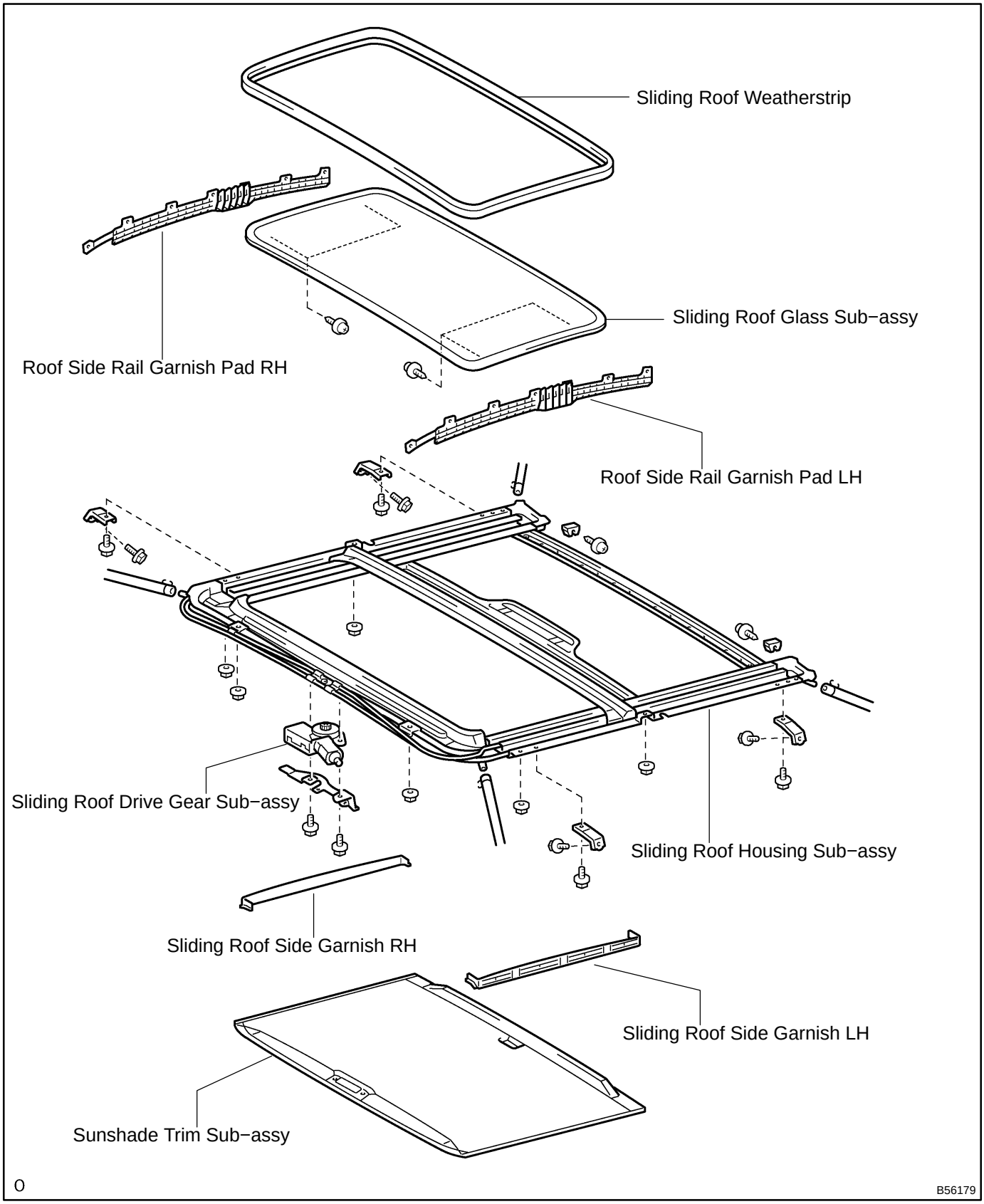

74045−04

REPLACEMENT

HINT:

The installation is in the reverse order of the removal. However, when there is a special point concerning the installation, it is indicated.

1. REMOVE ROOF HEADLINING ASSY (See page 76−22)

2. REMOVE ROOF SIDE RAIL GARNISH PAD RH (W/O CURTAIN SHIELD AIR BAG)

(a) Remove the 7 screws and roof side rail garnish pad.

(b) Use the same procedures described above on the other side.

3. REMOVE ROOF SIDE RAIL GARNISH PAD LH (W/O CURTAIN SHIELD AIR BAG)

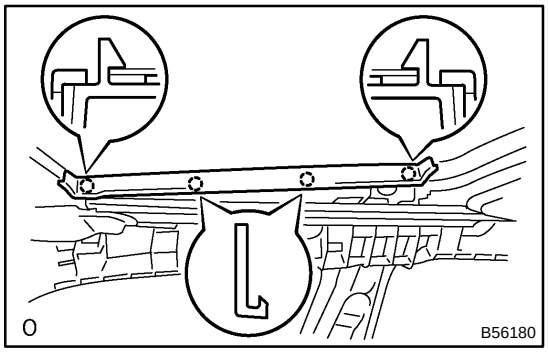

4. REMOVE SLIDING ROOF SIDE GARNISH RH

(a) Using a screwdriver, remove the sliding roof side garnish.

HINT:

Tape the screwdriver tip before use.

(b) Use the same procedures described above on the other side.

5. REMOVE SLIDING ROOF SIDE GARNISH LH

6. REMOVE SLIDING ROOF GLASS SUB−ASSY

(a) Using a torx wrench (T25), remove the 4 screws and sliding roof glass.

7. REMOVE SLIDING ROOF WEATHERSTRIP

8. REMOVE SLIDING ROOF DRIVE GEAR SUB−ASSY

(a) Remove the 2 bolts.

(b) Disconnect the clamp and then remove the sliding roof drive gear.

9. REMOVE SLIDING ROOF HOUSING SUB−ASSY

(a) Disconnect the 4 drain hoses from the housing.

(b) w/o curtain shield airbag:
Remove the 6 nuts and 4 bolts, then remove the housing as shown in the illustration.

(c) w/ curtain shield airbag:
Remove the 6 nuts and 8 bolts, then remove the housing as shown in the illustration.

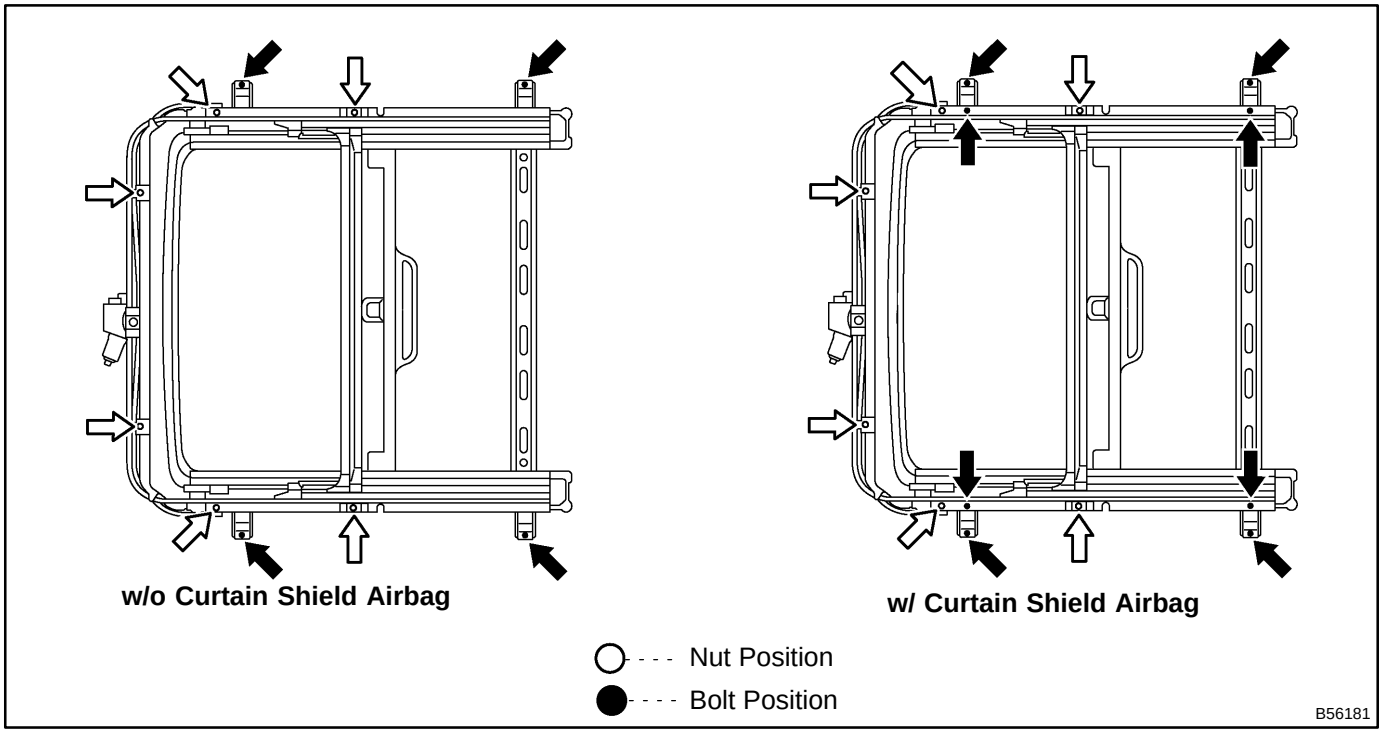

10. REMOVE SUNSHADE TRIM SUB−ASSY

(a) Remove the screw and stopper.

(b) Remove the sunshade trim.

(c) Use the same procedures described above on the other side.

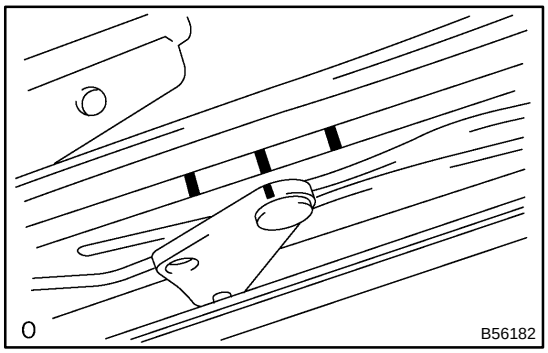

11. ADJUST FULLY CLOSED POSITION

(a) Using a screwdriver, slide the drive cable of the sliding roof to align the matchmarks.

HINT:

Tape the tip of the screwdriver before use.

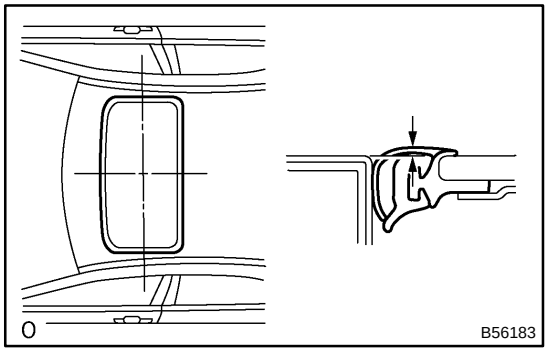

12. INSTALL SLIDING ROOF GLASS SUB−ASSY

(a) Check for a difference in level between the sliding roof (weatherstrip) and roof panel.

Corner of rear side:

0 ± 1.5 mm (0 ± 0.059 in.)

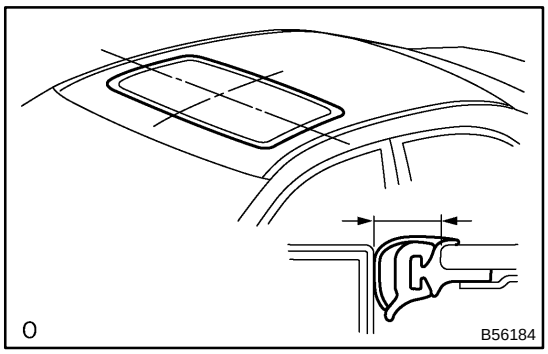

(b) Check for a difference in level between the sliding roof (glass) and roof panel.

NOTICE:

The clearance should be thoroughly even.

(c) Adjust the roof panel.

(1) Using a torque driver T25, loosen a screw to adjust the sliding roof panel position.

When the adjustment has done, tighten the screw there.

13. RESET THE SLIDING ROOF POSITION (See page 74−7)

14. INSPECT FOR LEAKS

(a) Adjusting the sliding roof, check there is no water leak.

(b) In case of water leak, readjust the sliding roof.

SLIDING ROOF (TMMK Made)

COMPONENTS

74042−03

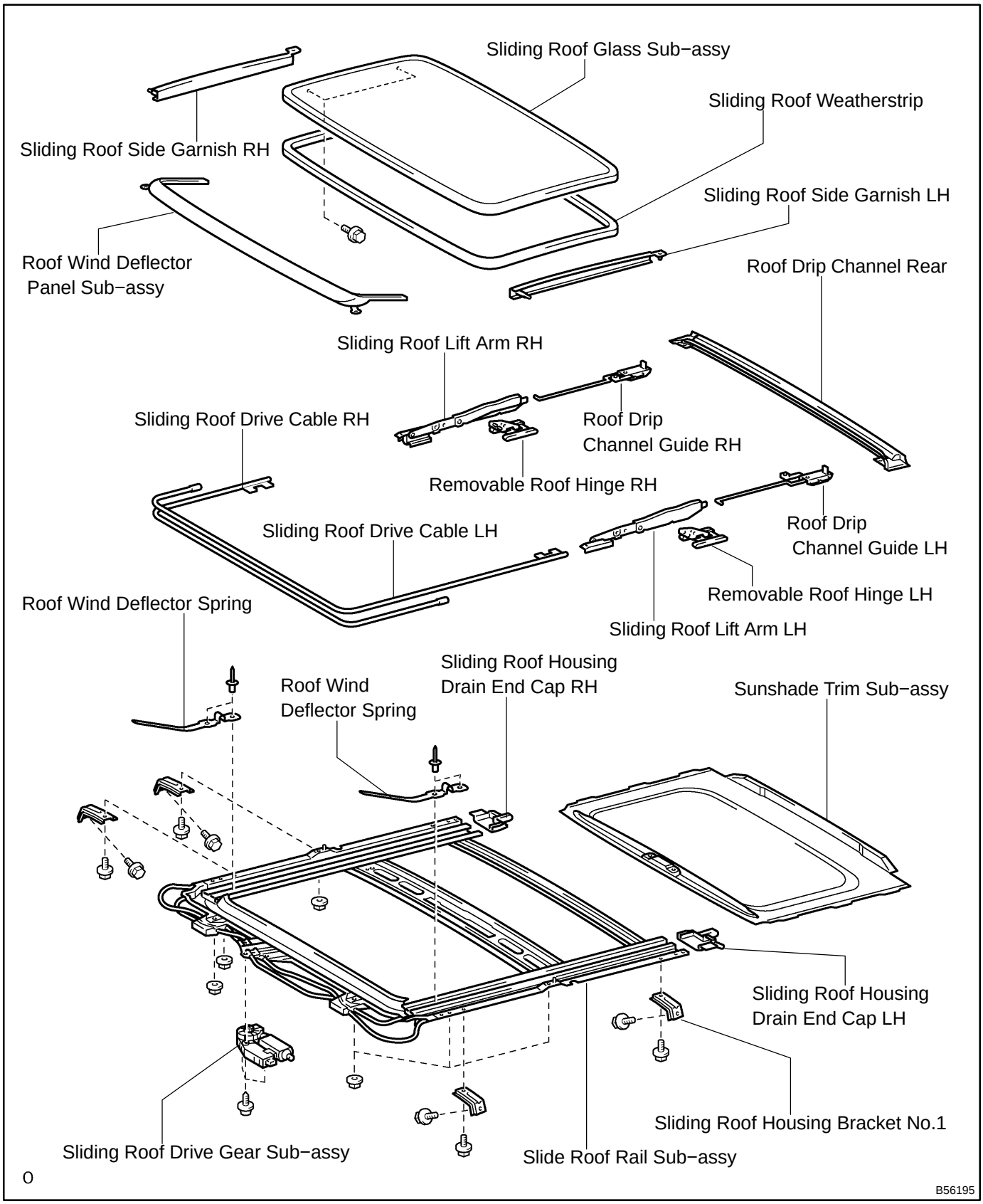

B56195

REPLACEMENT

HINT:

The installation is in the reverse order of the removal. However, when there is a special point concerning the installation, it is indicated.

74043−06

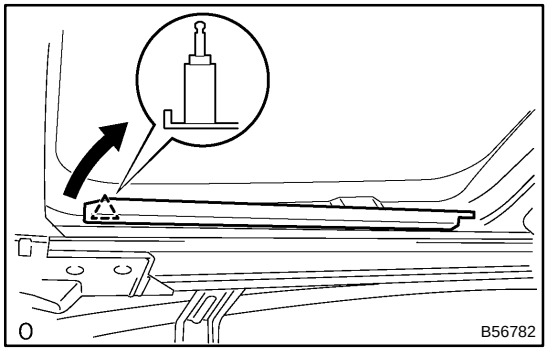

1. REMOVE SLIDING ROOF GLASS SUB−ASSY

(a) Disengage the claws and turn the sliding roof side garnish as shown in the illustration.

(b) Using a torx wrench (T25), remove the 4 screws and sliding roof glass.

2. REMOVE SLIDING ROOF WEATHERSTRIP

3. REMOVE SLIDING ROOF DRIVE GEAR SUB−ASSY

(a) Using a torx wrench (T25), remove the 3 screws and sliding roof drive gear.

4. REMOVE SLIDE ROOF RAIL SUB−ASSY

(a) Disconnect the 4 drain hoses from the housing.

(b) Remove the 6 nuts and 4 bolts, then remove the slide roof rail as shown in the illustration.

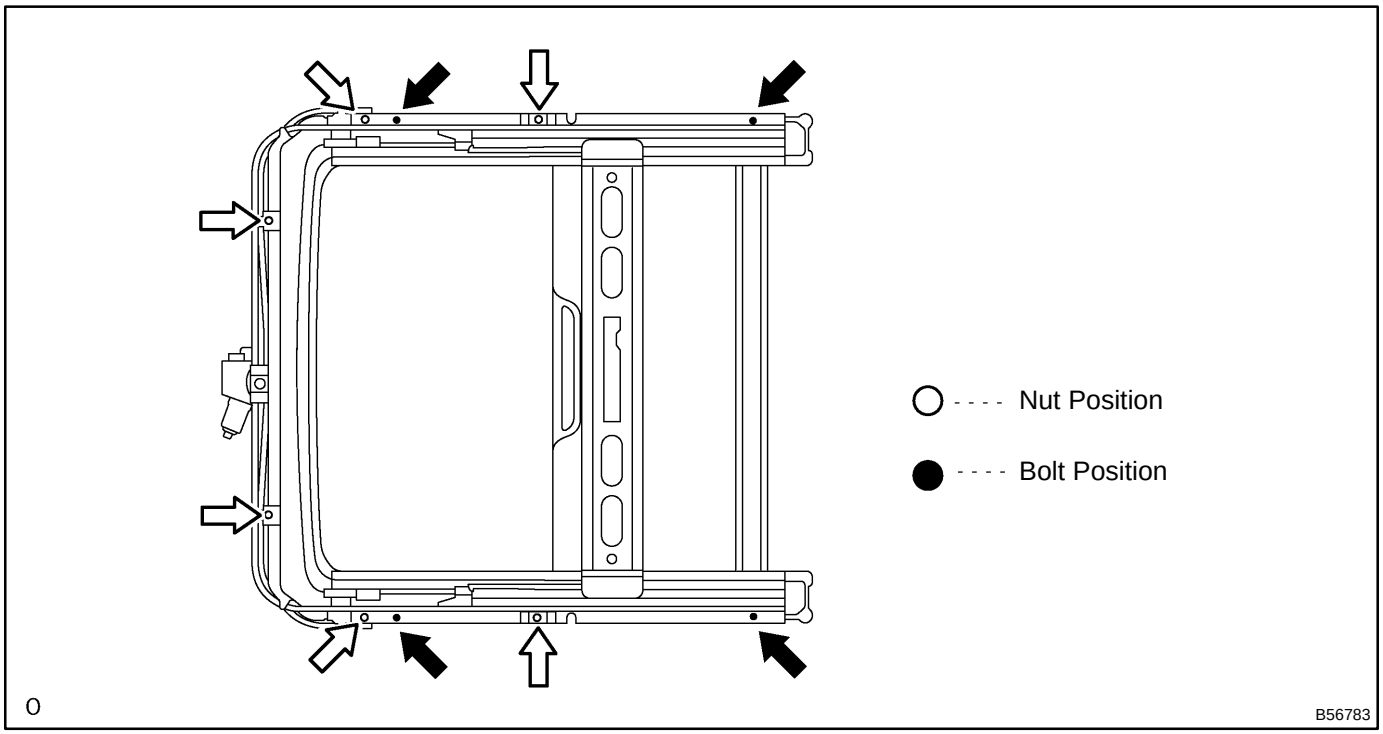

5. REMOVE SLIDING ROOF SIDE GARNISH RH

(a) Using a screwdriver, remove the sliding roof side garnish.

HINT:

Tape the screwdriver tip before use.

(b) Use the same procedures described above on the other side.

6. REMOVE SLIDING ROOF SIDE GARNISH LH

7. REMOVE ROOF DRIP CHANNEL REAR

(a) Remove the 2 screws and roof drip channel rear.

8. REMOVE SLIDING ROOF HOUSING DRAIN END CAP RH

(a) Using a screwdriver, remove the sliding roof housing drain end cap.

HINT:

Tape the screwdriver tip before use.

(b) Use the same procedures described above on the other side.

9. REMOVE SLIDING ROOF HOUSING DRAIN END CAP LH

10. REMOVE SUNSHADE TRIM SUB−ASSY

(a) Pull out the sunshade trim in the vehicle rear direction.

11. REMOVE ROOF DRIP CHANNEL GUIDE RH

(a) Disengage the roof drip channel guide and sliding roof lift arm, and then pull out the roof drip channel guide in the vehicle rear direction.

(b) Use the same procedures described above on the other side.

12. REMOVE ROOF DRIP CHANNEL GUIDE LH

13. REMOVE REMOVABLE ROOF HINGE RH

(a) Remove the stopper screw and removable roof hinge.

(b) Use the same procedures described above on the other side.

14. REMOVE REMOVABLE ROOF HINGE LH

15. REMOVE SLIDING ROOF DRIVE CABLE RH

16. REMOVE SLIDING ROOF DRIVE CABLE LH

17. REMOVE SLIDING ROOF LIFT ARM RH

(a) Pull out the sliding roof lift arm in the vehicle rear direction.

(b) Use the same procedures described above on the other side.

18. REMOVE SLIDING ROOF LIFT ARM LH

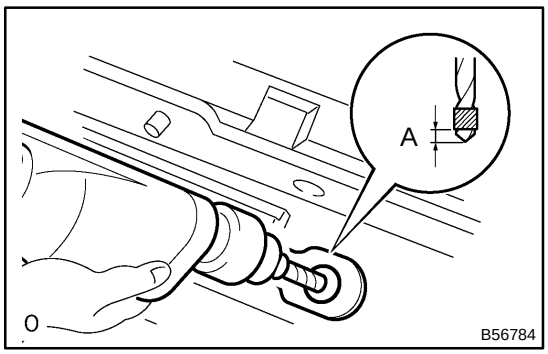

19. REMOVE ROOF WIND DEFLECTOR SPRING

(a) Remove the rivet.

(1) Use a drill of less than ϕ 4 mm (0.16 in.).

(2) Gently and vertically place the drill tip onto the rivet, and cut the rivet flanges.

A: 5 mm (0.20 in.)

NOTICE:

- **Prizing the hole with a drill can lead to damage to the rivet hole or the drill itself.**
- **Be careful when undertaking this task as the cut rivet is hot.**

(3) Even if the flange is taken off, continue drilling and push−cut the remaining fragments with the drill.

20. REMOVE ROOF WIND DEFLECTOR PANEL SUB−ASSY

21. REMOVE SLIDING ROOF HOUSING BRACKET NO.1

(a) Remove the 4 bolts and 4 sliding roof housing bracket.

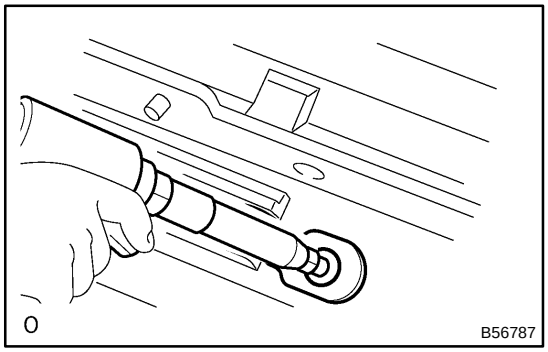

22. INSTALL ROOF WIND DEFLECTOR SPRING

(a) Using an air riveter or hand riveter with a nose piece, strike the rivets into the body panel.

NOTICE:

- **If the rivet is not positioned perpendicularly, it will bend the mandrel.**
- **When the trigger is pulled, it may damage SST.**

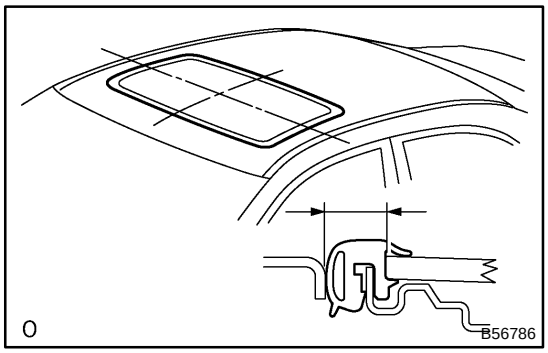

23. INSTALL SLIDING ROOF GLASS SUB−ASSY

(a) Check for a difference in level between the sliding roof (weatherstrip) and roof panel.

Corner of rear side:
0 ± 1.5 mm (0 ± 0.059 in.)

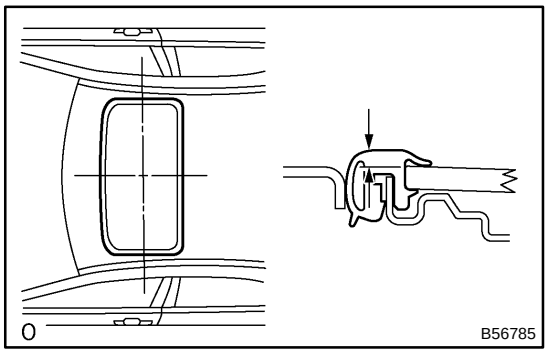

(b) Check for a difference in level between the sliding roof (glass) and roof panel.

NOTICE:
The clearance should be thoroughly even.

(c) Adjust the roof panel.

(1) Using a torx® driver T25, loosen the screw to adjust the sliding roof panel position. When the adjustment has done, tighten the screw there.

24. RESET THE SLIDING ROOF POSITION (See page 74−7)

25. INSPECT FOR LEAKS

(a) Adjusting the sliding roof, check there is no water leak.

(b) In case of water leak, readjust the sliding roof.

HOOD

ADJUSTMENT

75094−02

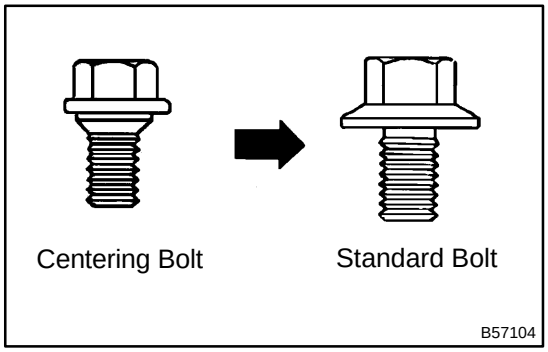

HINT:
Since the centering bolt is used as a hood hinge and as a hood lock set bolt, the hood and hood lock can not be adjusted with it on. Substitute a bolt with washer for the centering bolt.

1. INSPECT HOOD SUB−ASSY

(a) Check that the clearance is within the standard value.

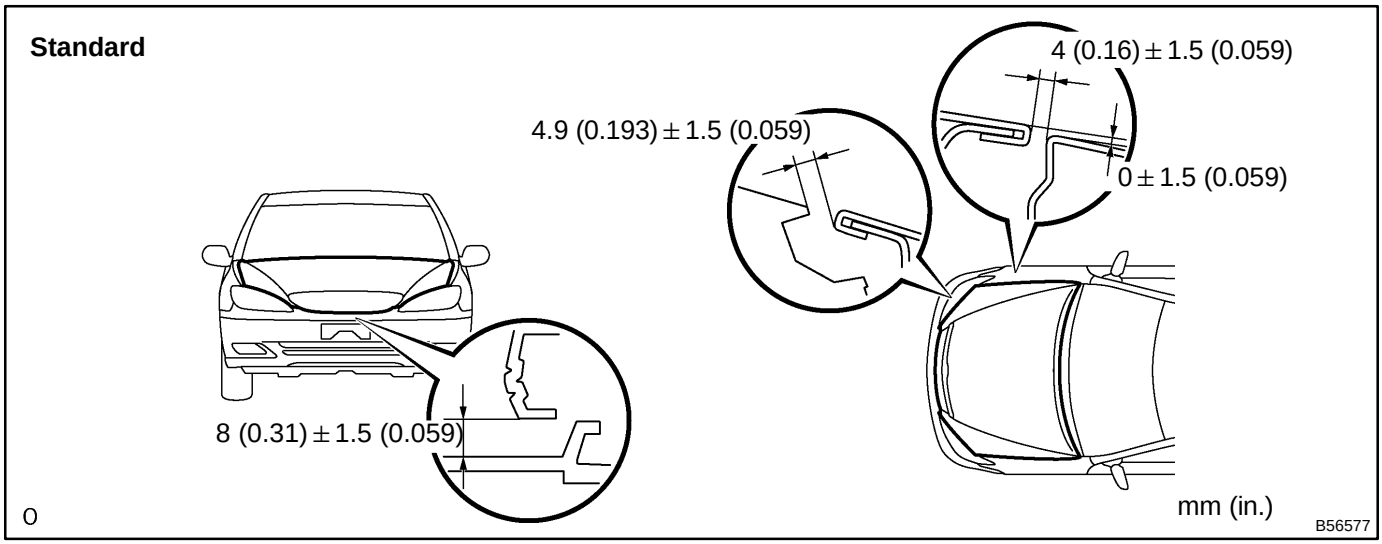

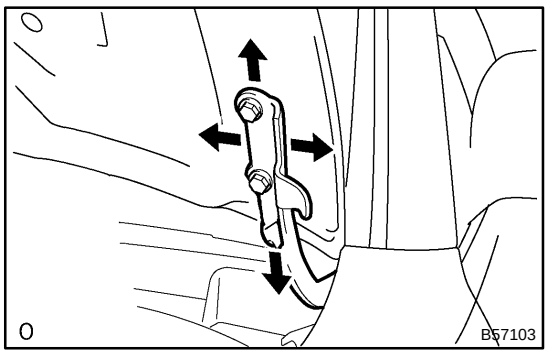

2. ADJUST HOOD SUB−ASSY

(a) Loosen the hood side hinge bolts.

(b) Adjust the clearance so that it will be in the standard value, by moving the hood.

(c) Tighten the hood side hinge bolts after adjustment.
Torque: 26 N·m (265 kgf·cm, 19 ft·lbf)

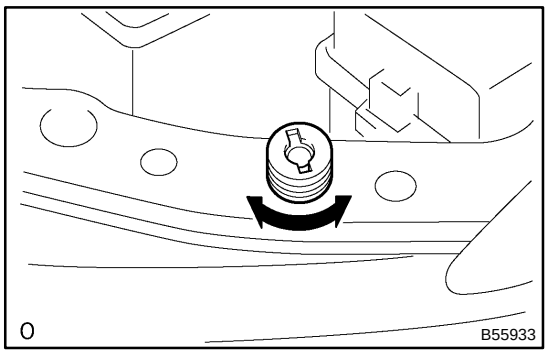

(d) Adjust the height of the hood front end by the cushion gum.

HINT:

The cushion gum goes up and down by turning it.

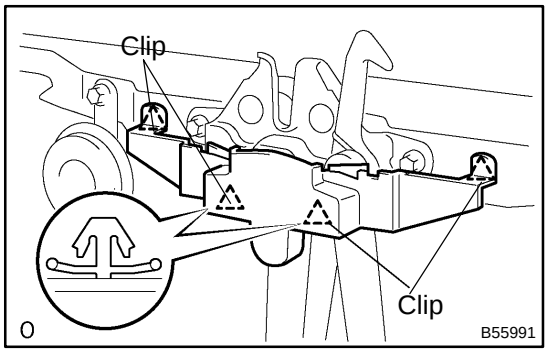

(e) Using a screwdriver, remove the hood lock release lever cover.

HINT:

Tape the screwdriver tip before use.

NOTICE:

Removing the protector damages the clips inside the protector, and therefore the use of a new protector is necessary on installation.

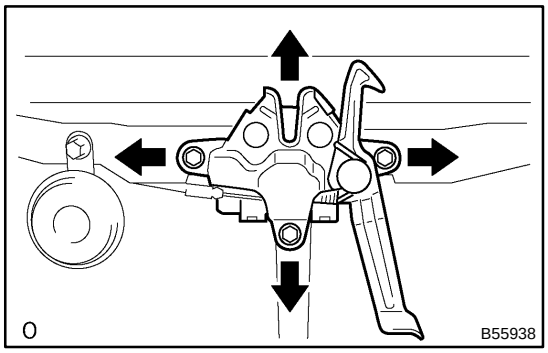

(f) Adjust the hood lock position so that the striker will come in, by moving the striker.

(g) Tighten the hood side hinge bolts after adjustment.
Torque: 8.0 N·m (82 kgf·cm, 71 ft·lbf)

HOOD SUPPORT ROD

75095−02

REPLACEMENT

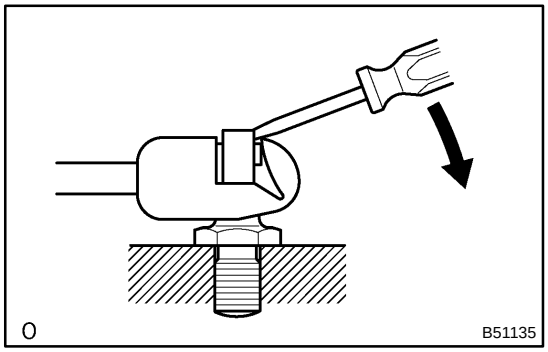

1. REMOVE HOOD SUPPORT ROD

(a) Using a screwdriver to hold the left spring, disengage the upper and lower parts of the support rod, and then remove the hood support rod.

NOTICE:

Removal should be done while the hood is being held up.

2. INSTALL HOOD SUPPORT ROD

NOTICE:

- **Install a metal socket onto the hood except a resinous one onto the body.**
- **After the installation, make sure that the socket is securely attached.**

75096−02

DISPOSAL

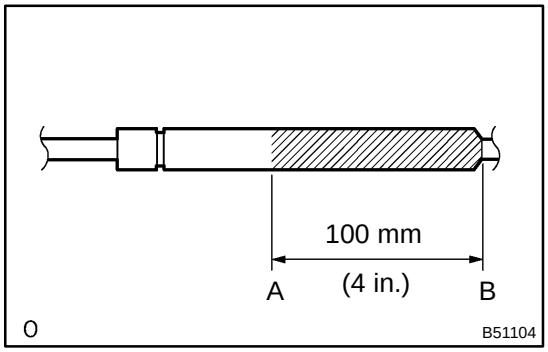

1. DISPOSE OF HOOD SUPPORT ROD

(a) Fix the hood stay assembly, with the piston−rod pulled out, on a vise.

(b) With protection glasses on, cut a part between A and B as shown in the illustration with a metal saw to release the gas.

NOTICE:

Although the gas inside the hood stay assembly is colorless, odorless and harmless, there is a possibility that cutting tips of the metal saw would jump around, therefore cover it with clothes or something.

FRONT DOOR

COMPONENTS

75098−03

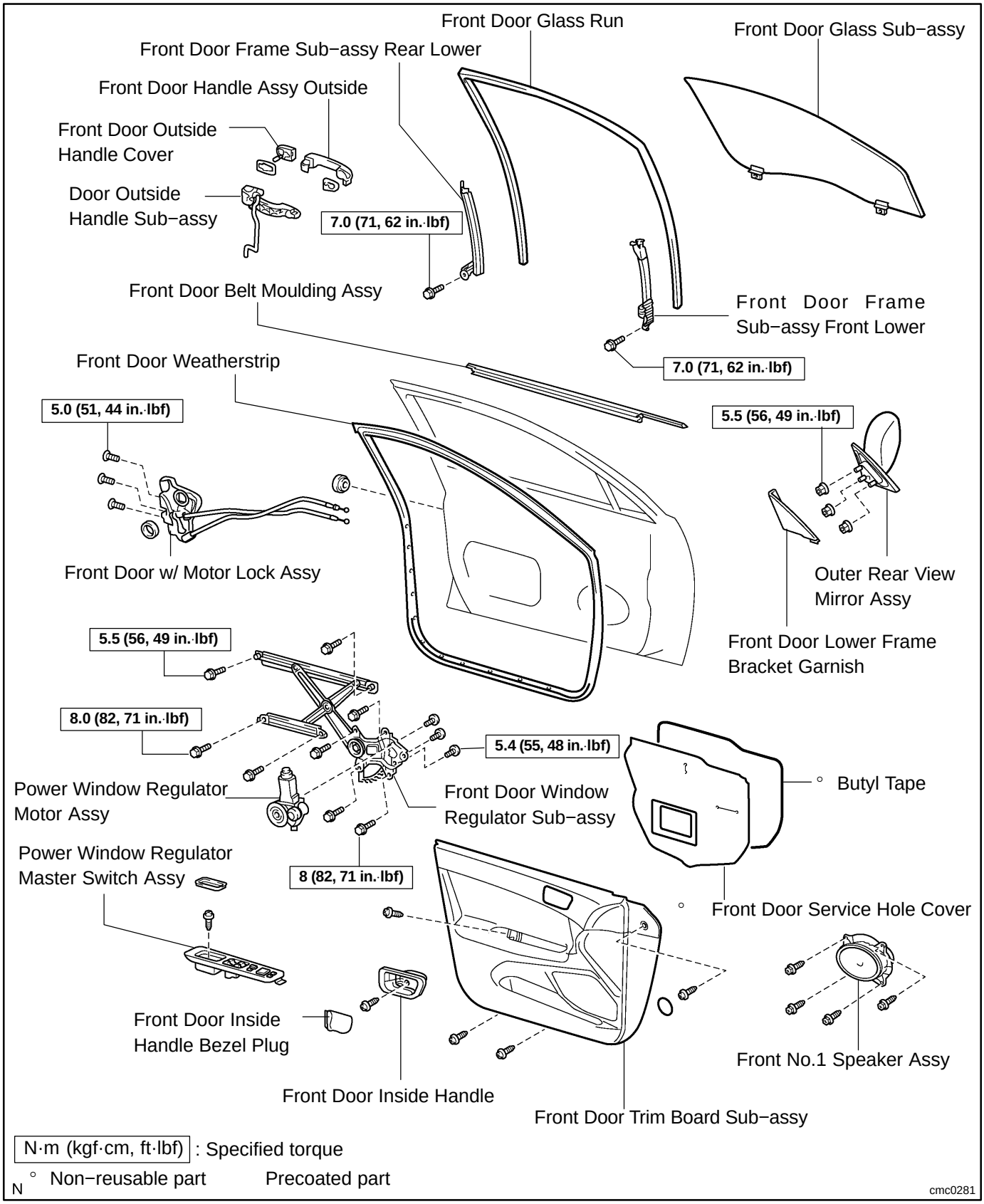

75097−02

ADJUSTMENT

HINT:

On the RH side, use in the same procedure as on the LH side.

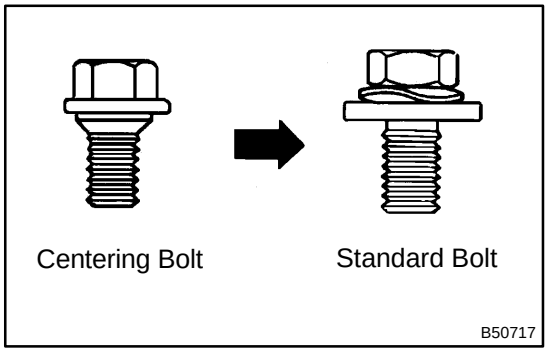

HINT:

Since the centering bolt is used as a door hinge set bolt, the door can not be adjusted with it on. Substitute a bolt with washer for the centering bolt.

1. INSPECT FRONT DOOR PANEL SUB−ASSY LH

(a) Check that the clearance is within the standard value.

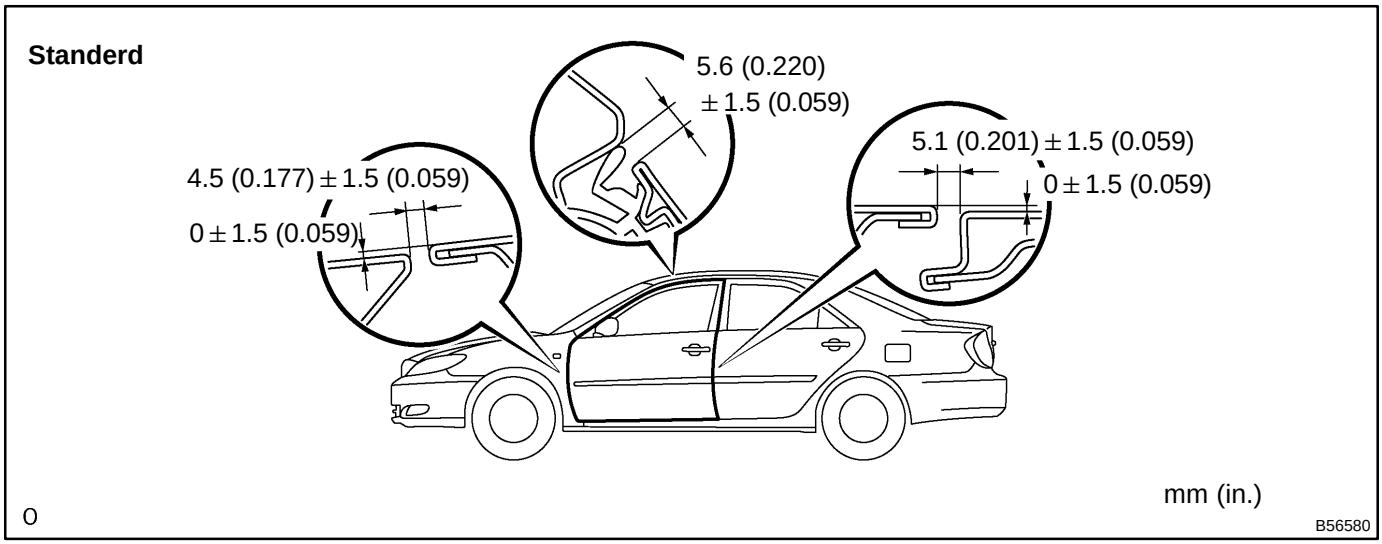

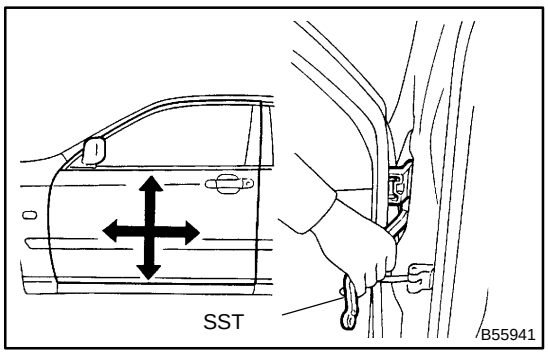

2. ADJUST FRONT DOOR PANEL SUB−ASSY LH

(a) Using SST, adjust the door by loosening the body side hinge bolts. Forward / rearward and vertically.

(b) Tighten the bolts after adjustment.

Torque: 26 N·m (265 kgf·cm, 19 ft·lbf)

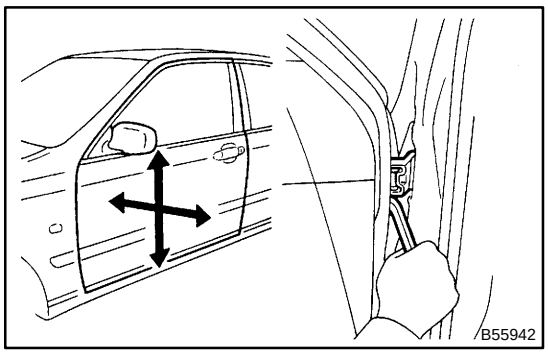

(c) Adjust the door by loosening the door side hinge bolts. Horizontally and vertically.
(d) Tighten the bolts after adjustment.
Torque: 26 N·m (265 kgf·cm, 19 ft·lbf)

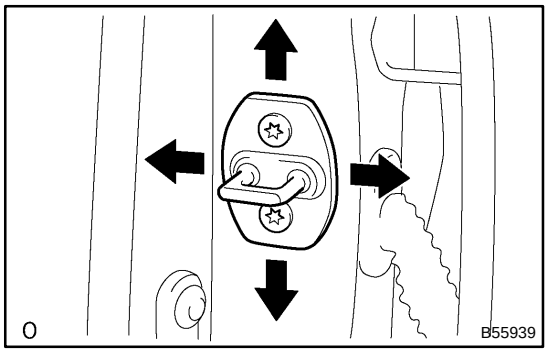

(e) Adjust the striker position by slightly loosening the striker mounting screws and hitting the striker with a brass bar and hammer.
(f) Tighten the striker mounting screws after adjustment.
Torque: 23 N·m (235 kgf·cm, 17 ft·lbf)

75099−04

OVERHAUL

HINT:

- The installation is in the reverse order of the removal. However, when there is a special point concerning the installation, it is indicated.
- On the RH side, use in the same procedure as on the LH side.

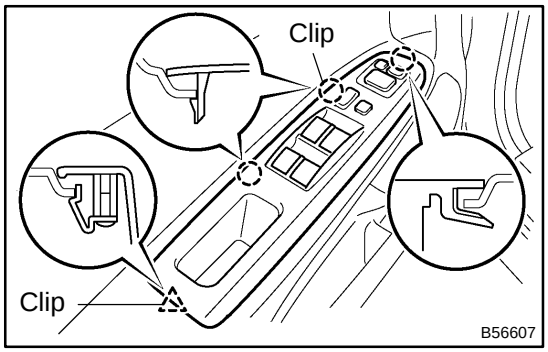

1. REMOVE POWER WINDOW REGULATOR MASTER SWITCH ASSY

(a) Remove the armrest base cover lower.
(b) Remove the screw.
(c) Using a screwdriver, remove the master switch then disconnect the connector.

HINT:
Tape the screwdriver tip before use.

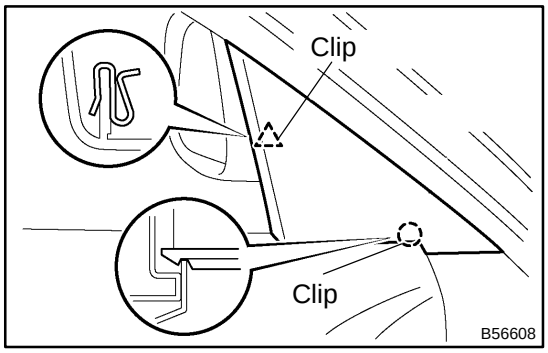

2. REMOVE FRONT DOOR LOWER FRAME BRACKET GARNISH LH

(a) Using a screwdriver, remove the lower frame bracket garnish.

HINT:
Tape the screwdriver tip before use.

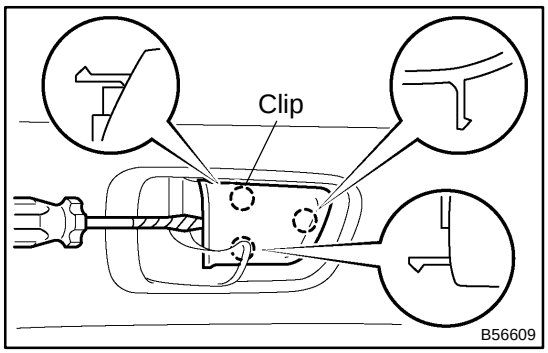

3. REMOVE FRONT DOOR INSIDE HANDLE BEZEL PLUG LH

(a) Using a screwdriver, remove the inside handle bezel plug.

HINT:
Tape the screwdriver tip before use.

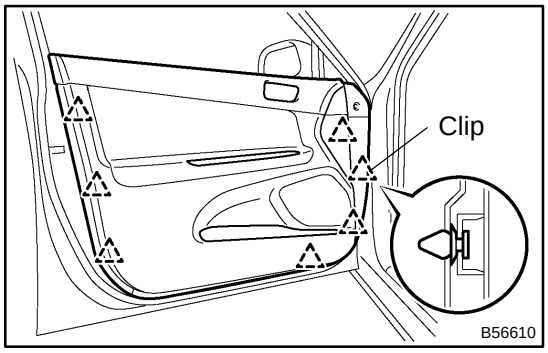

4. REMOVE FRONT DOOR TRIM BOARD SUB−ASSY LH

(a) Remove the hole plug.
(b) Remove the 5 screws.
(c) Remove the clip.
(d) Using a screwdriver, remove the trim board.

HINT:
Tape the screwdriver tip before use.

(e) Remove the inside handle then disconnect the 2 cables from the door lock.

5. REMOVE FRONT DOOR SERVICE HOLE COVER LH

(a) Disconnect each connector and remove the service hole cover.

NOTICE:

Remove the remaining tape on the body side.

6. REMOVE FRONT NO.1 SPEAKER ASSY

(a) Disconnect the connector.

(b) Remove the 4 bolts and front No.1 speaker.

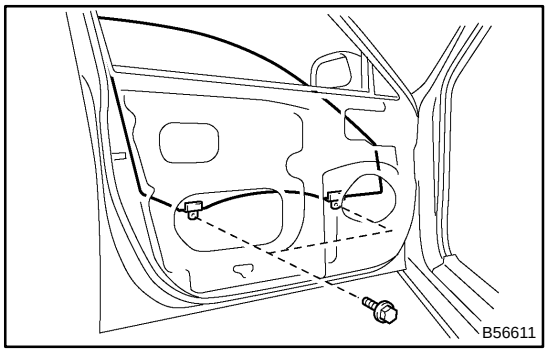

7. REMOVE FRONT DOOR GLASS SUB−ASSY LH

HINT:

Insert a shop rag inside the door panel to prevent scratching the glass.

(a) Open the door glass until the bolts appear in the service hole.

(b) Remove the 2 bolts and door glass.

NOTICE:

Do not damage the door glass.

HINT:

Pull the glass upward to remove it.

8. REMOVE FRONT DOOR WINDOW REGULATOR SUB−ASSY LH

(a) Disconnect the connector.

(b) Loosen the temporarily installed bolt.

NOTICE:

When the temporarily installed bolt is removed, the window regulator might drop and be deformed.

(c) Remove the 5 bolts and window regulator.

9. REMOVE POWER WINDOW REGULATOR MOTOR ASSY LH

(a) Using a torx® wrench (T25), remove the 3 screws and the motor assembly.

10. REMOVE FRONT DOOR GLASS RUN LH

11. REMOVE FRONT DOOR FRAME SUB−ASSY FRONT LOWER LH

(a) Remove the 2 screws and frame front lower.

Torque: 7.0 N·m (71 kgf·cm, 62 in.·lbf)

12. REMOVE FRONT DOOR FRAME SUB−ASSY REAR LOWER LH

(a) Remove the screw and frame rear lower.

Torque: 7.0 N·m (71 kgf·cm, 62 in.·lbf)

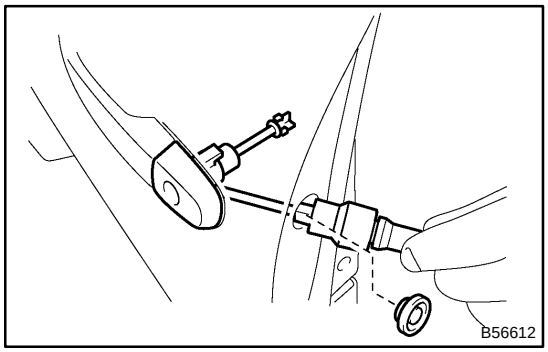

13. REMOVE FRONT DOOR OUTSIDE HANDLE COVER LH

(a) Remove the hole plug

(b) Using a torx® wrench (T30), loosen the screw and remove the outside handle cover with the door lock key cylinder installed.

14. REMOVE FRONT DOOR W/MOTOR LOCK ASSY LH

(a) Disconnect the connector.

(b) Using a torx® wrench (T30), remove the 3 screws and the door motor.

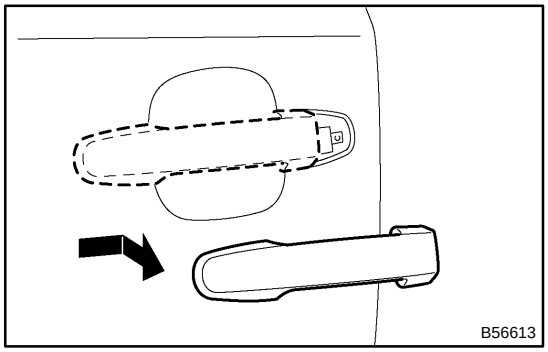

15. REMOVE FRONT DOOR HANDLE ASSY OUTSIDE LH

(a) Pushing the outside handle in the arrow mark direction in the illustration, remove the outside handle.

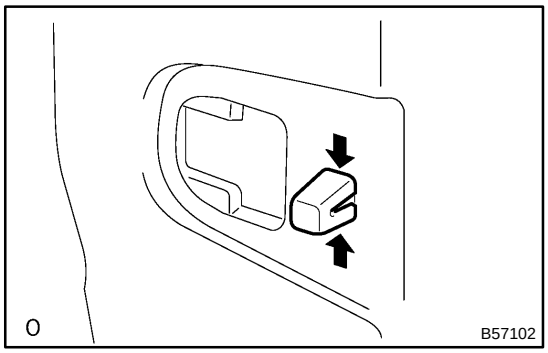

16. REMOVE DOOR OUTSIDE HANDLE SUB−ASSY LH

(a) Using a torx® wrench (T30), loosen the screw.

(b) Using pliers, disengage the clips and remove the outside handle, as shown in the illustration.

NOTICE:

Be sure to remove the outside handle together with the clips, because the clips will be damaged if the clips remain attached to the door panel.

17. REMOVE FRONT DOOR WEATHERSTRIP LH

(a) Using a screwdriver, remove the door weatherstrip.

HINT:

Tape the screwdriver tip before use.

18. REMOVE OUTER REAR VIEW MIRROR ASSY LH

(a) Remove the 3 nuts.

Torque: 5.5 N·m (56 kgf·cm, 49 in.·lbf)

(b) Disconnect the connector then remove the mirror.

19. REMOVE FRONT DOOR BELT MOULDING ASSY LH(See page 76−12)

20. INSTALL DOOR OUTSIDE HANDLE SUB−ASSY LH

(a) Using a torx® wrench (T30), install the handle.

Torque: 4.0 N·m (41 kgf·cm, 37 in.·lbf)

21. INSTALL FRONT DOOR W/MOTOR LOCK ASSY LH

(a) Install a new door lock wire harness packing.

NOTICE:

- **If reusing the removed lock with rear door motor, the packing in the connecting part should be replaced with a new one.**
- **Be careful that grease and dirt will not stick to the packing surface in the connecting part.**
- **Reusing the removed packing or using a damaged packing will cause water to penetrate through the connecting part, and it will result in a malfunction of the door lock.**

(b) Insert the outside handle link into the door lock with front door motor, and then set it to the door panel.

NOTICE:

Make sure that the outside handle link is securely engaged with the lock assembly.

(c) Apply adhesive to the threads of the 3 screws.
Adhesive:
Part No. 08833−00070, THREE BOND 1324 or equivalent

(d) Using a torx® wrench (T30), install the door lock with the 3 screws.
Torque: 5.0 N·m (51kgf·cm, 44 in.·lbf)

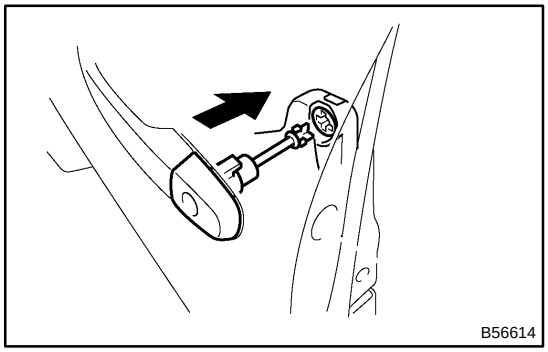

22. INSTALL FRONT DOOR OUTSIDE HANDLE COVER LH

(a) Using a torx® wrench (T30), install the outside handle cover with the screw.

23. INSTALL POWER WINDOW REGULATOR MOTOR ASSY LH (W/ JAM PROTECTION)

(a) Apply MP grease to the sliding and rotating parts of the window regulator.

(b) If the jam protection dose not function properly, perform the following procedure.

HINT:

It is necessary to reset the power window motor (in the initial position for the limit switch) when separating the window regulator from the power window motor or operating the window regulator with the door glass not installed.

(1) Install the power window motor with the 3 screws.
Torque: 5.4 N·m (55kgf·cm, 48 in.·lbf)

HINT:

Place the matchmarks on the power window motor and window regulator gear.

(2) Connect the power window motor and power window switch to the wire harness of the vehicle.

(3) Turn the ignition switch ON and operate the power window switch to idle the power window motor in the up side direction for more than 6 rotations or less than 10 rotations (4 seconds or more).

(4) Assemble the power window motor and regulator.

HINT:

- Install the motor when the regulator arm is below the middle point.
- Align the matchmarks on the power window motor and window regulator gear when installing the power window motor.

(5) Assemble the power window regulator and door glass.

HINT:

Never rotate the motor to the down direction until the installation of the window glass is completed.

24. INSTALL FRONT DOOR WINDOW REGULATOR SUB−ASSY LH

(a) Install the temporarily installed bolt securely.

(b) Install the temporarily installed bolt to the window regulator to the door panel, and install the front door window regulator temporarily.

(c) Tighten the 5 bolts and the temporarily installed bolt.
Torque: 8.0 N·m (82 kgf·cm, 71 in.·lbf)

(d) Connect the connector.

25. INSTALL FRONT DOOR GLASS SUB−ASSY LH

(a) Install the front door glass with the 2 bolts.
Torque: 5.5 N·m (56 kgf·cm, 49 in.·lbf)

HINT:

When the installation point of the glass does not match, adjust the regulator position by manual operation.

(1) Connect the power window switch to the wire harness and turn the ignition switch ON.

(2) Repeat UP and DOWN operation several times manually.
(3) Check if AUTO UP → AUTO DOWN operates in the automatic operation.

HINT:

- Note that the jam protection function does not operate just after resetting.
- Reset the regulator again when performing the reverse operating after closing the window fully by AUTO UP operation.

26. INSPECT POWER WINDOW FUNCTION

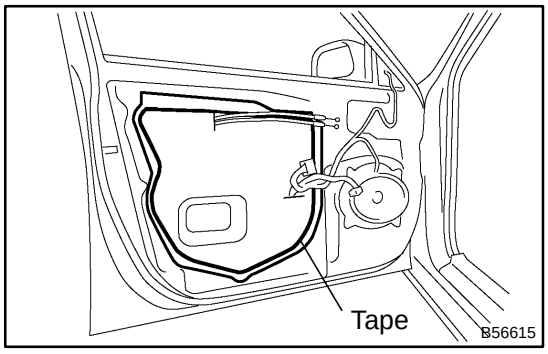

27. INSTALL FRONT DOOR SERVICE HOLE COVER LH

(a) Install a new service hole cover to the door panel.

HINT:

- When installing the service hole cover, pull out the links and connectors through the service hole cover.
- There should be no wrinkles or folds on the service hole cover after attaching it.
- After attaching the service hole cover, sealing condition should be confirmed.

REAR DOOR

COMPONENTS

7509A−03

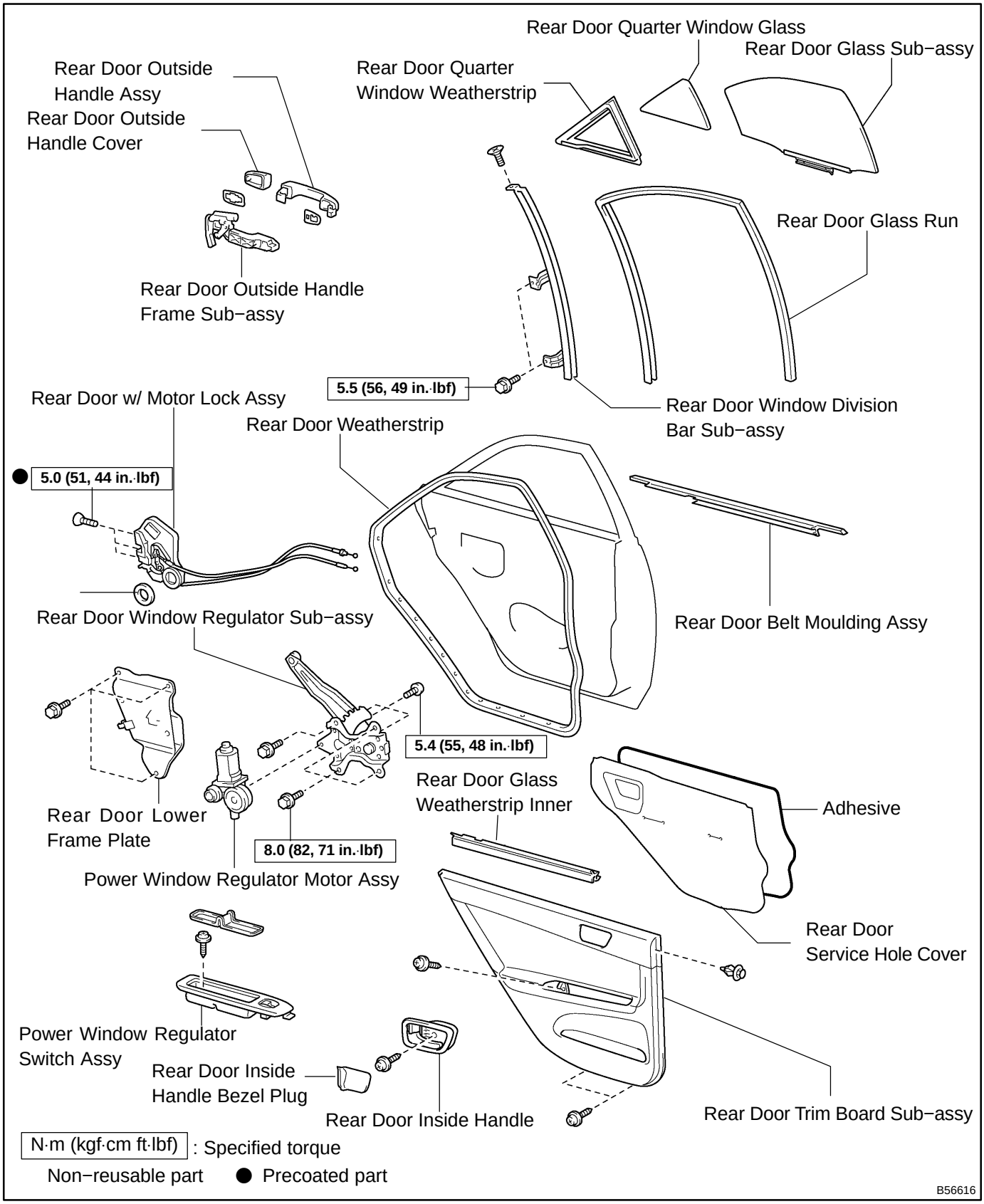

7509B−02

ADJUSTMENT

HINT:

- The installation is in the reverse orderof the removal. However, when there is a special point concerning the installation, it is indicated.
- On the LH side, use the same procedures as on the RH side.

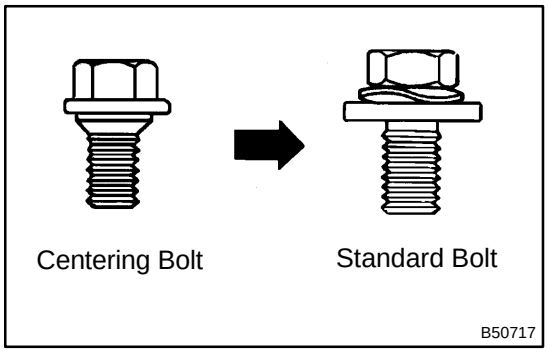

HINT:
Since the centering bolt is used as a door hinge set bolt, the door can not be adjusted with it on. Substitute a bolt with washer for the centering bolt.

1. INSPECT REAR DOOR PANEL SUB−ASSY LH

(a) Check that the clearance is within the standard value.

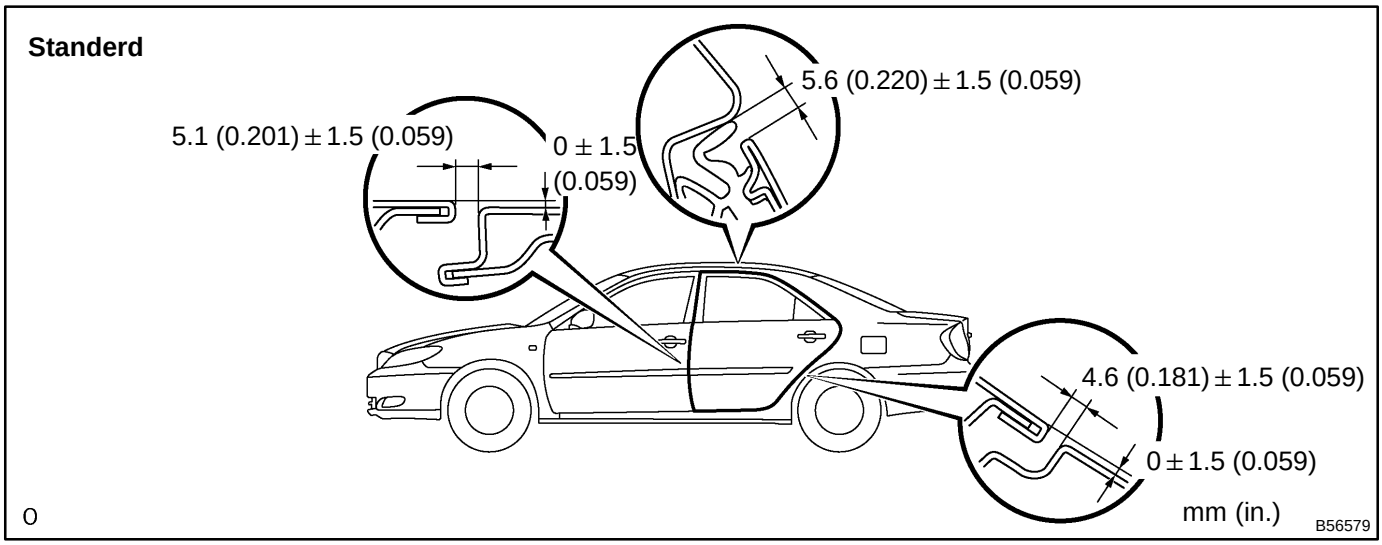

2. REMOVE FRONT DOOR SCUFF PLATE LH(See page 76−22)

3. REMOVE REAR DOOR SCUFF PLATE LH(See page 76−22)

4. REMOVE FRONT DOOR OPENING TRIM WEATHERSTRIP LH(See page 76−22)

5. REMOVE REAR DOOR OPENING TRIM WEATHERSTRIP LH(See page 76−22)

6. REMOVE CENTER PILLAR GARNISH LOWER LH(See page 76−22)

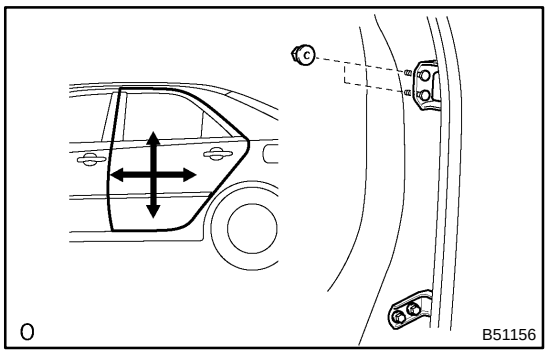

7. ADJUST REAR DOOR PANEL SUB−ASSY LH

(a) Adjust the door by loosening the body side hinge nuts and bolts. Forward / rearward and vertically.

(b) Tighten the bolts after adjustment.
Torque: 26 N·m (265 kgf·cm, 19 ft·lbf)

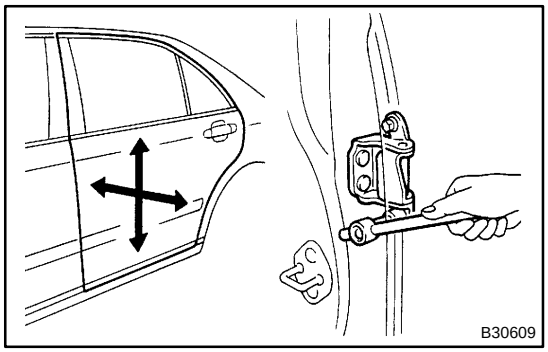

(c) Adjust the door by loosening the door side hinge bolts. Horizontally and vertically.

(d) Tighten the bolts after adjustment.
Torque: 26 N·m (265 kgf·cm, 19 ft·lbf)

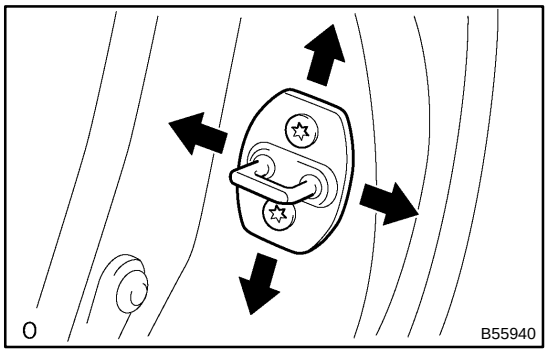

(e) Adjust the striker position by slightly loosening the striker mounting screws and hitting the striker with a brass bar and hammer.

(f) Tighten the striker mounting screws after adjustment.
Torque: 23 N·m (235 kgf·cm, 17 ft·lbf)

7509C−04

OVERHAUL

HINT:

- The installation is in the reverse order of the removal. However, when there is a special point concerning the installation, it is indicated.
- On the LH side, use the same procedures as on the RH side.

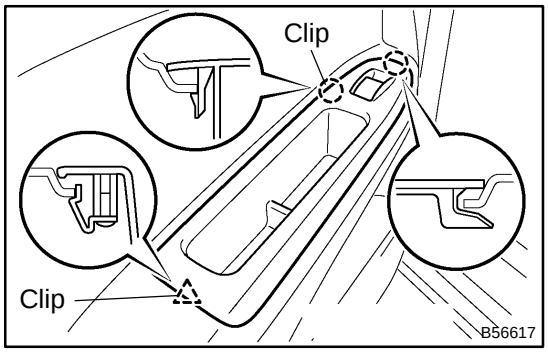

1. REMOVE POWER WINDOW REGULATOR SWITCH ASSY REAR

(a) Remove the armrest base cover lower.
(b) Remove the screw.
(c) Using a screwdriver, remove the regulator switch then disconnect the connector.

HINT:
Tape the screwdriver tip before use.

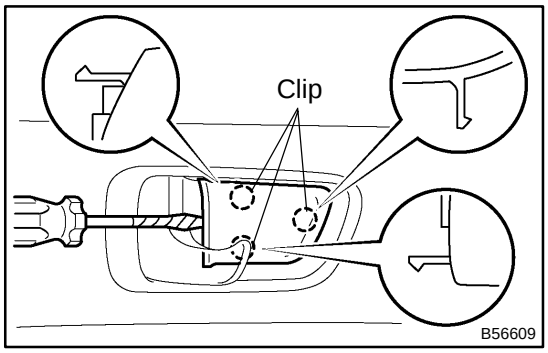

2. REMOVE REAR DOOR INSIDE HANDLE BEZEL PLUG LH

(a) Using a screwdriver, remove the inside handle bezel plug.

HINT:
Tape the screwdriver tip before use.

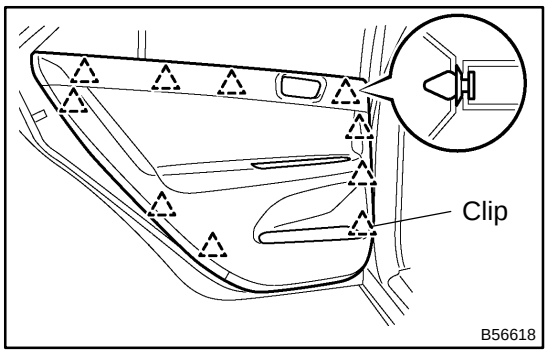

3. REMOVE REAR DOOR TRIM BOARD SUB−ASSY LH

(a) Remove the 4 screws.
(b) Using a screwdriver, remove the clip.
(c) Using a screwdriver, remove the trim board.

HINT:
Tape the screwdriver tip before use.

(d) Remove the inside handle then disconnect the 2 cables from the rear door lock assembly.

4. REMOVE REAR DOOR LOWER FRAME PLATE SUB−ASSY LH

(a) Remove the 3 screws and lower frame plate.

5. REMOVE REAR DOOR SERVICE HOLE COVER LH

(a) Disconnect each connector and remove the service hole cover.

NOTICE:

Remove the remaining tape on the body side.

6. REMOVE REAR DOOR GLASS WEATHERSTRIP INNER LH

7. REMOVE REAR DOOR GLASS RUN LH

8. REMOVE REAR DOOR WEATHERSTRIP LH

(a) Using a screwdriver, remove the door weatherstrip.

HINT:

Tape the screwdriver tip before use.

9. REMOVE REAR DOOR BELT MOULDING ASSY LH(See page 76−13)

10. REMOVE REAR DOOR WINDOW FRAME SUB−ASSY REAR LOWER LH

(a) Remove the screws.

(b) Remove the 2 bolts and window frame rear lower.

11. REMOVE REAR DOOR QUARTER WINDOW GLASS LH

(a) Remove the quarter window glass.

12. REMOVE REAR DOOR GLASS SUB−ASSY LH

HINT:

Insert a shop rag inside the door panel to prevent scratching the glass.

(a) Open the door glass.

(b) Tilt the door glass and disconnect the roller of the regulator from the channel to remove the door glass.

NOTICE:

Do not damage the door glass.

HINT:

Pull the glass upward to remove it.

13. REMOVE REAR DOOR WINDOW REGULATOR SUB−ASSY LH

(a) Disconnect the connector.

(b) Loosen the temporarily installed bolt.

NOTICE:

When the temporarily installed bolt is removed, the rear door window regulator might drop and be deformed.

(c) Remove the 3 bolts and window regulator.

14. REMOVE POWER WINDOW REGULATOR MOTOR ASSY LH

(a) Using a torx® wrench (T25), remove the 3 screws and the motor.

15. REMOVE REAR DOOR W/MOTOR LOCK ASSY LH

(a) Disconnect the connector.

(b) Using a torx® wrench (T30), remove the 3 screws and the door lock.

16. REMOVE REAR DOOR OUTSIDE HANDLE COVER RH

(a) Using a torx® wrench (T30), loosen the screw and remove the outside handle cover.

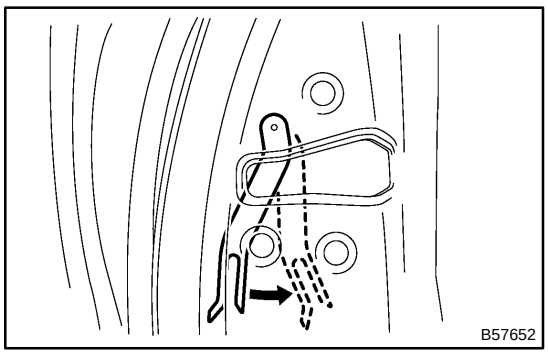

17. REMOVE REAR DOOR OUTSIDE HANDLE ASSY LH

(a) Pull and hold the release plate of the outside handle frame, as shown in the illustration.

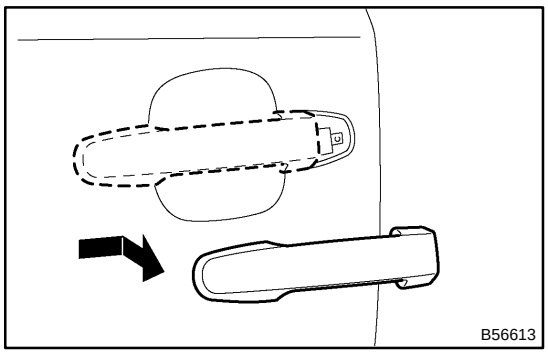

(b) Pushing the outside handle in the arrow mark direction in the illustration, remove the outside handle.

NOTICE:

If the release plate is not pulled and held when removing the outside handle assembly, then the release pate will interfere with the outside handle and it will damage the release plate.

18. REMOVE REAR DOOR OUTSIDE HANDLE FRAME SUB−ASSY LH

(a) Using a torx® wrench (T30), loosen the screw and remove the outside handle frame.

19. INSTALL REAR DOOR OUTSIDE HANDLE FRAME SUB−ASSY LH

(a) Using a torx® wrench (T30), install the outside handle frame with the screw.
Torque: 4.0 N·m (41 kgf·cm, 37 in.·lbf)

20. INSTALL REAR DOOR OUTSIDE HANDLE COVER RH

(a) Using a torx® wrench (T30), install the outside handle cover with the screw.
Torque: 4.0 N·m (41 kgf·cm, 37 in.·lbf)

21. INSTALL REAR DOOR W/MOTOR LOCK ASSY LH

(a) Install a new door lock wire harness packing.

NOTICE:

- **If reusing the removed lock with rear door lock, the packing in the connecting part should be replaced with a new one.**
- **Be careful that grease and dirt will not stick to the packing surface in the connecting part.**
- **Reusing the removed packing or using a damaged packing will cause water to penetrate through the connecting part, and it will result in a malfunction of the door lock.**

(b) Engage the door lock with rear door motor with the release plate of the outside handle, and then set it to the door panel.

NOTICE:

Make sure that the release plate of the outside handle frame is securely engaged with the lock assembly.

(c) Apply adhesive to the threads of the 3 screws.
Adhesive:
Part No. 08833−00070, THREE BOND 1324 or equivalent

(d) Using a torx® wrench (T30), install the door lock with the 3 screws and bolt.
Torque: 5.0 N·m (51kgf·cm, 44 in.·lbf)

22. INSTALL POWER WINDOW REGULATOR MOTOR ASSY LH

(a) Using a torx® wrench (T25), install the power window regulator motor with the 3 screws.

23. INSTALL REAR DOOR WINDOW REGULATOR SUB−ASSY LH

(a) Install the temporarily installed bolt securely.

(b) Install the temporarily installed bolt to the window regulator to the rear door panel, and install the window regulator temporarily.

(c) Tighten the 3 bolts and the temporarily installed bolt.
Torque: 8.0 N·m (82 kgf·cm, 71 in.·lbf)

(d) Connect the connector.

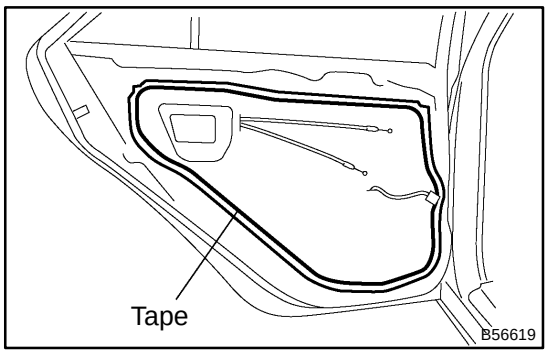

24. INSTALL REAR DOOR SERVICE HOLE COVER LH

(a) Install a new service hole cover to the door panel.

HINT:

- When installing the service hole cover, pull out the links and connectors through the service hole cover.
- There should be no wrinkles or folds on the service hole cover after attaching it.
- After attaching the service hole cover, sealing condition should be confirmed.

LUGGAGE COMPARTMENT DOOR

ADJUSTMENT

7509D−03

1. INSPECT LUGGAGE COMPARTMENT DOOR PANEL SUB−ASSY

(a) Check that the clearance is within the standard value.

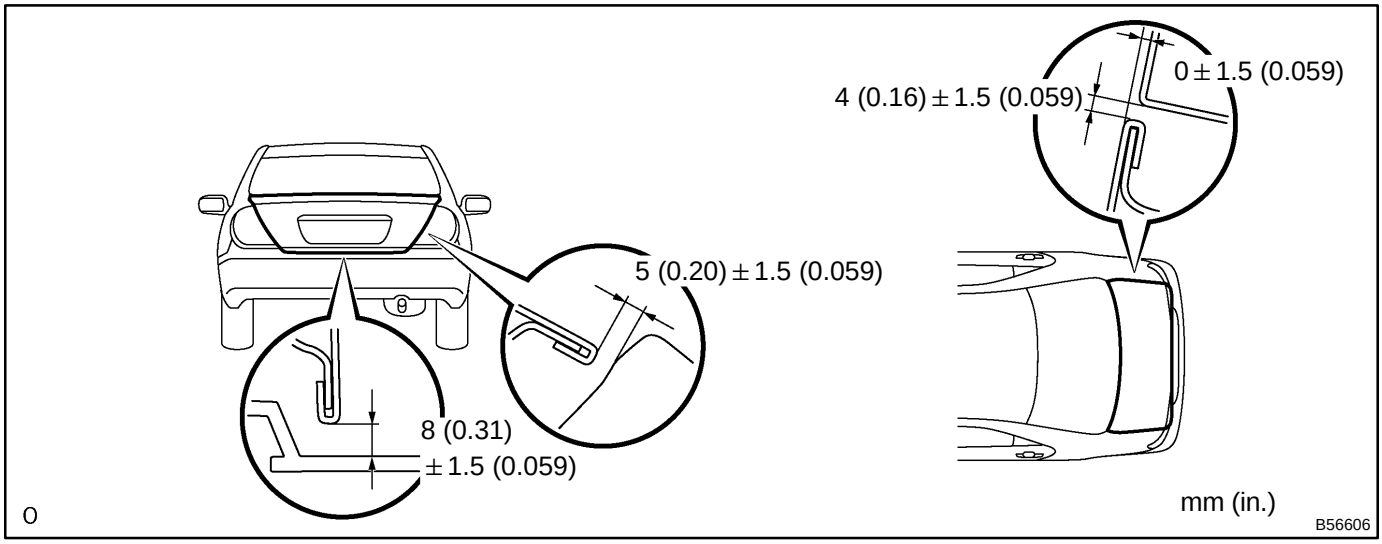

2. REMOVE LUGGAGE COMPARTMENT DOOR COVER(See page 76−9)

3. REMOVE LUGGAGE COMPARTMENT FLOOR MAT(See page 76−8)

4. REMOVE SPARE WHEEL COVER ASSY(See page 76−8)

5. REMOVE LUGGAGE COMPARTMENT SIDE COVER SUB−ASSY RH(See page 76−8)

6. REMOVE LUGGAGE COMPARTMENT TRIM HOOK NO.1(See page 76−8)

7. REMOVE REAR FLOOR FINISH PLATE(See page 76−8)

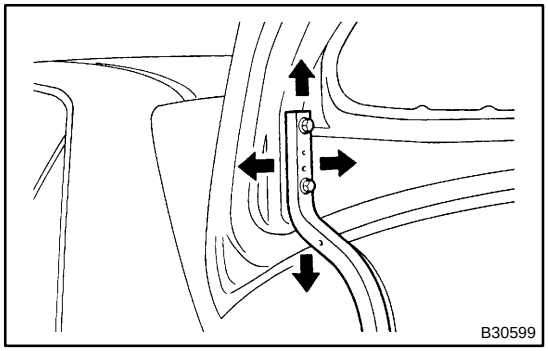

8. ADJUST LUGGAGE COMPARTMENT DOOR PANEL SUB−ASSY

(a) For forward/rearward and right/left adjustments, loosen the bolts.

(b) For a vertical adjustment of the door front end, increase or decrease the number of the washers between the hinge and door.

(c) Tighten the bolts after adjustment.

Torque: 8.0 N·m (82 kgf·cm, 71 ft·lbf)

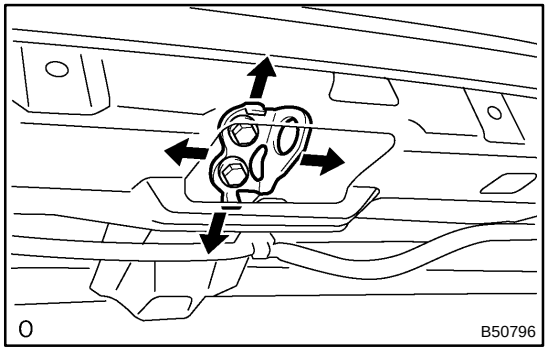

(d) Using a hammer and a brass bar, tap the striker to adjust it.

(e) Tighten the bolts after adjustment.

Torque: 5.5 N·m (56 kgf·cm, 49 ft·lbf)

LUGGAGE DOOR HINGE TORSION BAR

7509E−02

REPLACEMENT

HINT:

On the LH side, use the same procedures as on the RH side.

NOTICE:

Hold the door when opening / closing it in order to prevent the door from closing without any resistance after removing the torsion bar.

1. REMOVE LUGGAGE COMPARTMENT FLOOR MAT

2. REMOVE SPARE WHEEL COVER ASSY

3. REMOVE REAR FLOOR FINISH PLATE(See page 76−7)

4. REMOVE LUGGAGE COMPARTMENT TRIM COVER INNER RH(See page 76−7)

5. REMOVE LUGGAGE COMPARTMENT TRIM COVER INNER LH(See page 76−7)

6. REMOVE LUGGAGE DOOR HINGE TORSION BAR LH

(a) Remove the torsion bar RH from the clip placed in the center of the upper back panel.

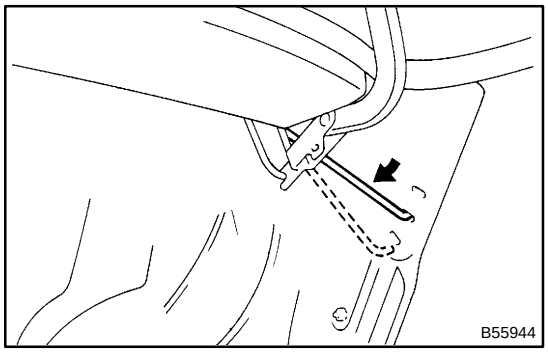

(b) Remove the tip of the torsion bar by hand from the roof side inner panel.

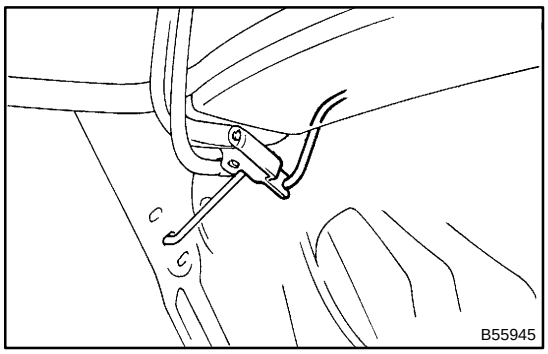

(c) Take out the hinge arm from the torsion bar in the rear direction.

(d) Pull the torsion bar to your side in order to remove the ”U”−shaped part from the hinge support.

7. REMOVE LUGGAGE DOOR HINGE TORSION BAR RH

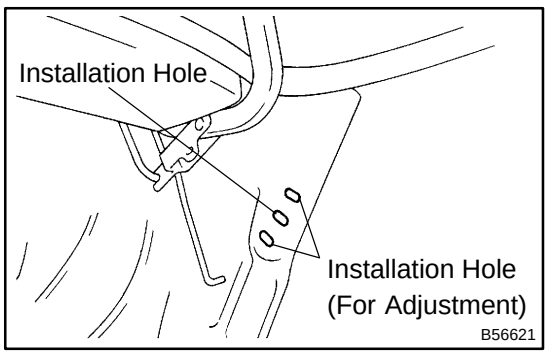

8. INSTALL LUGGAGE DOOR HINGE TORSION BAR LH

(a) Check the paint mark of the torsion bar. (When installing a new one)

HINT:

- Green paint for a vehicle without rear spoiler
- Yellow paint for a vehicle with rear spoiler

(b) Set the tip of the torsion bar in the installation hole placed in the center part. Holes placed in the upper and lower parts are used for adjustment.

HINT:

If the return force becomes less because the torsion bar has been damaged, adjustment should be done in the upper hole.

- If the return force is little, adjust one of the torsion bars.
- If the return force is still little, adjust both of the torsion bars.

9. INSTALL LUGGAGE DOOR HINGE TORSION BAR RH

(a) Check the paint mark of the torsion bar. (When installing a new one)

HINT:

- White paint for a vehicle without rear spoiler
- Red paint for a vehicle with rear spoiler

FRONT BUMPER

COMPONENTS

761DL−01

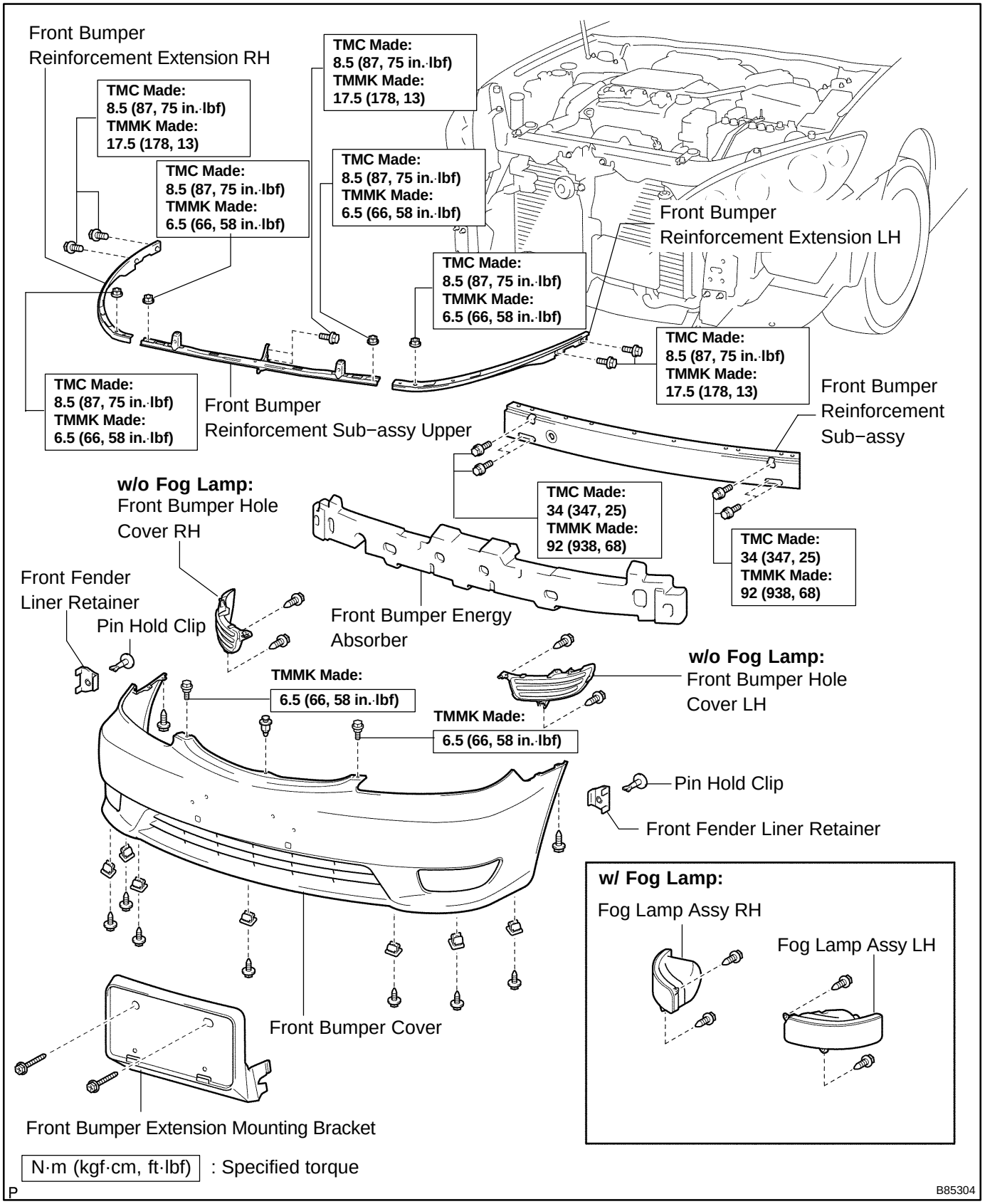

761DM−01

REPLACEMENT

HINT:

- Installation is in the reverse order of removal.
- COMPONENTS: SEE PAGE 76−1.

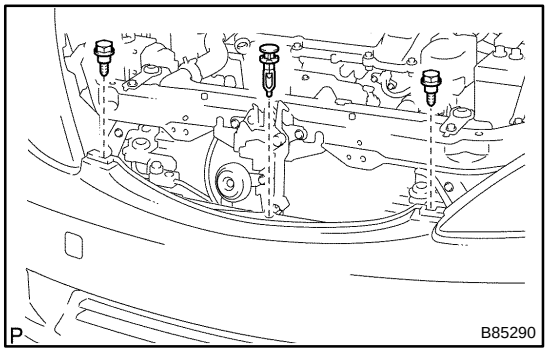

1. REMOVE FRONT BUMPER ASSY

(a) Remove the clip and the 2 bolts.

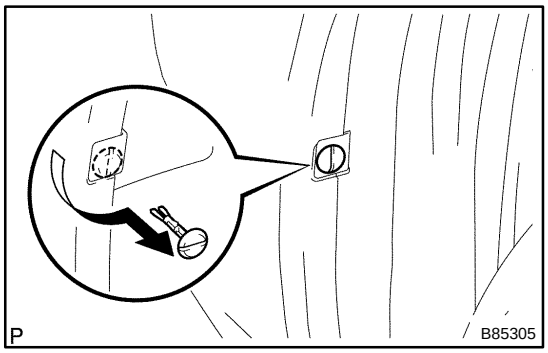

(b) Turn the pin hold clip 90 as shown in the illustration and remove it. (LH side)

HINT:

Remove the RH side by following the same procedure as for the LH side.

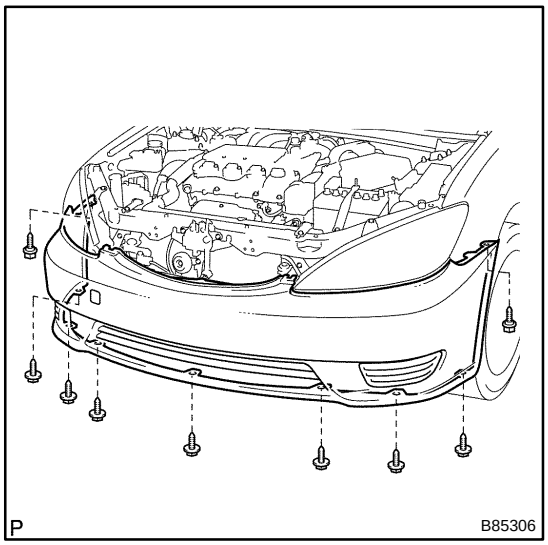

(c) Remove the 9 screws.

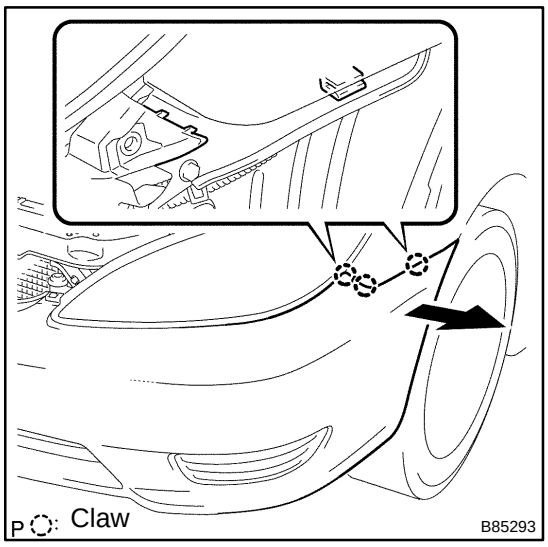

(d) Disengage the 3 claws by pulling the left side of the front bumper cover in the direction shown by the arrow. (LH side)

HINT:

Disengage the RH side by following the same procedure as for the LH side.

(e) Disconnect the fog lamp connector (w/ fog lamp) and remove the front bumper assy.

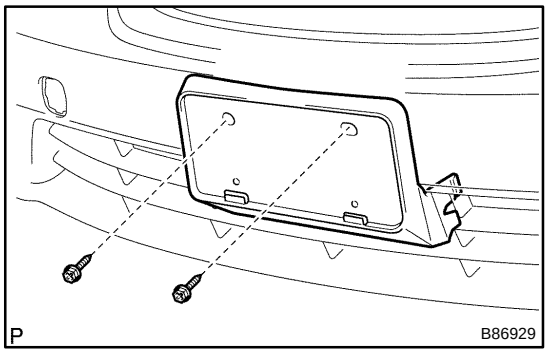

2. REMOVE FRONT BUMPER EXTENSION MOUNTING BRACKET

(a) Remove the 2 screws and the bumper extension mounting bracket.

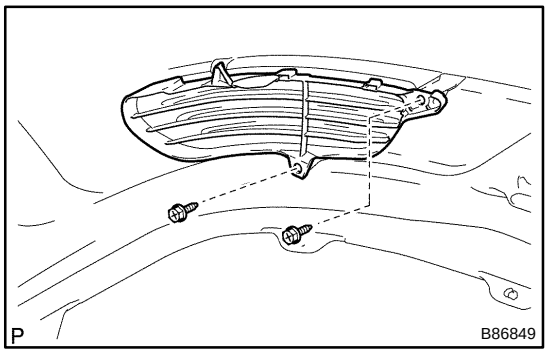

3. REMOVE FRONT BUMPER HOLE COVER LH (W/O FOG LAMP)

(a) Remove the 2 screws and the front bumper hole cover LH.

4. REMOVE FRONT BUMPER HOLE COVER RH (W/O FOG LAMP)

5. REMOVE FOG LAMP ASSY LH (W/ FOG LAMP) (SEE PAGE 65−16)

6. REMOVE FOG LAMP ASSY RH (W/ FOG LAMP) (SEE PAGE 65−16)

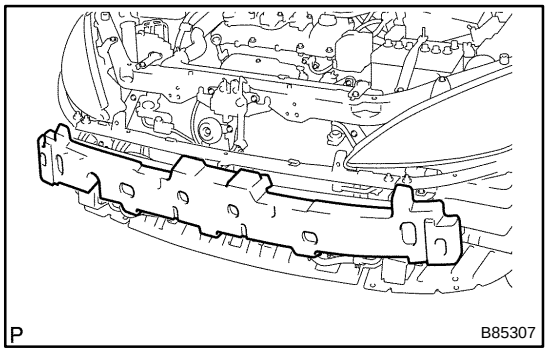

7. REMOVE FRONT BUMPER ENERGY ABSORBER

(a) Remove the front bumper energy absorber.

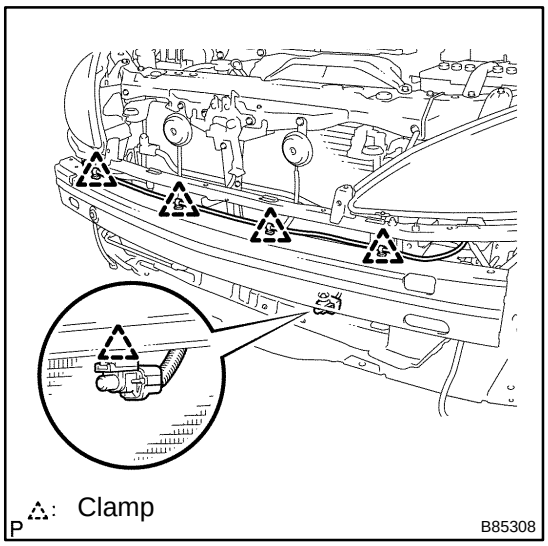

8. REMOVE FRONT BUMPER REINFORCEMENT SUB−ASSY

(a) Disengage the 5 clamps.

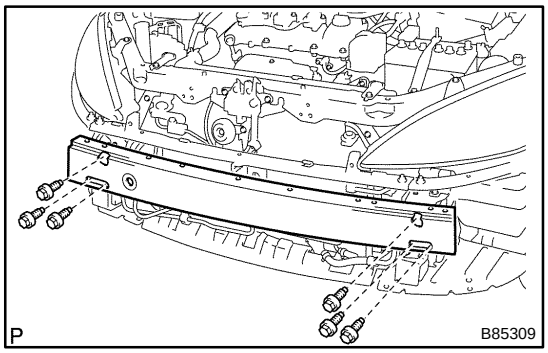

(b) Remove the 6 bolts and the front bumper reinforcement sub−assy.

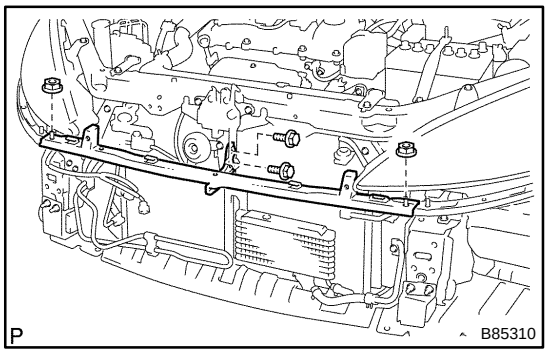

9. REMOVE FRONT BUMPER REINFORCEMENT SUB−ASSY UPPER

(a) Remove the 2 bolts and the 2 nuts.

(b) Remove the front bumper reinforcement sub−assy upper.

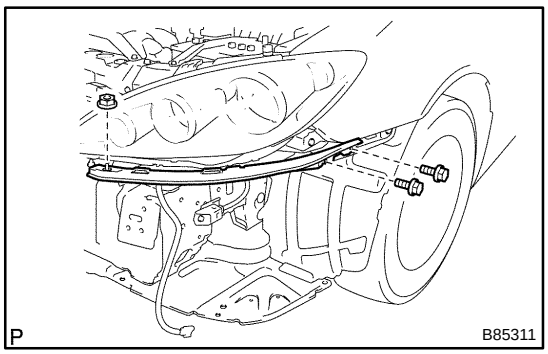

10. REMOVE FRONT BUMBER REINFORCEMENT EXTENSION LH

(a) Remove the 2 bolts and the nut.

(b) Remove the front bumper reinforcement extension LH.

11. REMOVE FRONT BUMBER REINFORCEMENT EXTENSION RH

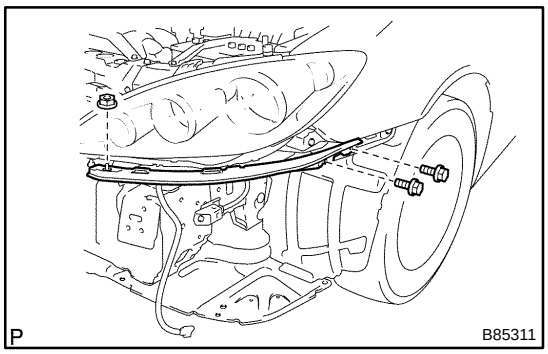

12. INSTALL FRONT BUMBER REINFORCEMENT EXTENSION LH

(a) TMC MADE:

(1) Install the front bumper reinforcement extension LH with the 2 bolts and nut.

Torque:
Bolt: 8.5 N·m (87 kgf·cm, 75 in.·lbf)
Nut: 8.5 N·m (87 kgf·cm, 75 in.·lbf)

(b) TMMK MADE:

(1) Install the front bumper reinforcement extension LH with the 2 bolts and nut.

Torque:
Bolt: 17.5 N·m (178 kgf·cm, 13 ft·lbf)
Nut: 6.5 N·m (66 kgf·cm, 58 in.·lbf)

13. INSTALL FRONT BUMBER REINFORCEMENT EXTENSION RH

(a) TMC MADE:

(1) Install the front bumper reinforcement extension RH with the 2 bolts and nut.

Torque:
Bolt: 8.5 N·m (87 kgf·cm, 75 in.·lbf)
Nut: 8.5 N·m (87 kgf·cm, 75 in.·lbf)

(b) TMMK MADE:

(1) Install the front bumper reinforcement extension RH with the 2 bolts and nut.

Torque:
Bolt: 17.5 N·m (178 kgf·cm, 13 ft·lbf)
Nut: 6.5 N·m (66 kgf·cm, 58 in.·lbf)

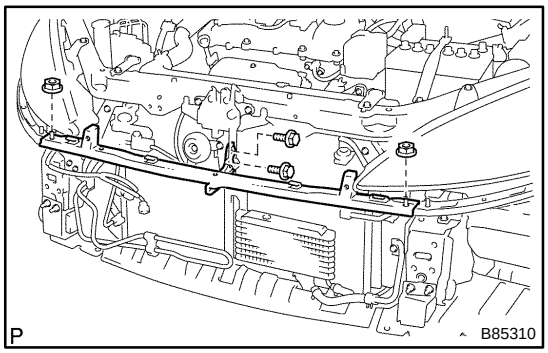

14. INSTALL FRONT BUMPER REINFORCEMENT SUB−ASSY UPPER

(a) TMC MADE:

(1) Install the front bumper reinforcement sub−assy upper with the 2 bolts and 2 nuts.

Torque:
Bolt: 8.5 N·m (87 kgf·cm, 75 in.·lbf)
Nut: 8.5 N·m (87 kgf·cm, 75 in.·lbf)

(b) TMMK MADE:

(1) Install the front bumper reinforcement sub−assy upper with the 2 bolts and 2 nuts.

Torque:
Bolt: 17.5 N·m (178 kgf·cm, 13 ft·lbf)
Nut: 6.5 N·m (66 kgf·cm, 58 in.·lbf)

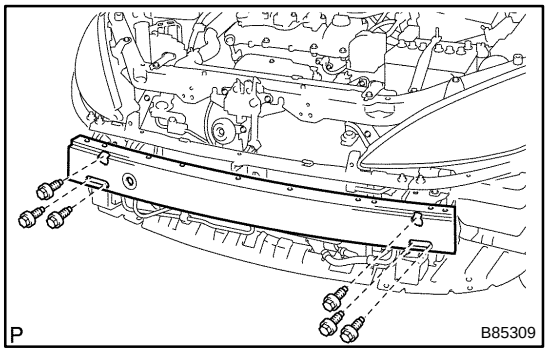

15. INSTALL FRONT BUMPER REINFORCEMENT SUB−ASSY

(a) TMC MADE:

(1) Install the front bumper reinforcement sub−assy with the 6 bolts.

Torque: 34 N·m (347 kgf·cm, 25 ft·lbf)

(b) TMMK MADE:

(1) Install the front bumper reinforcement sub−assy with the 6 bolts.

Torque: 92 N·m (938 kgf·cm, 68 ft·lbf)

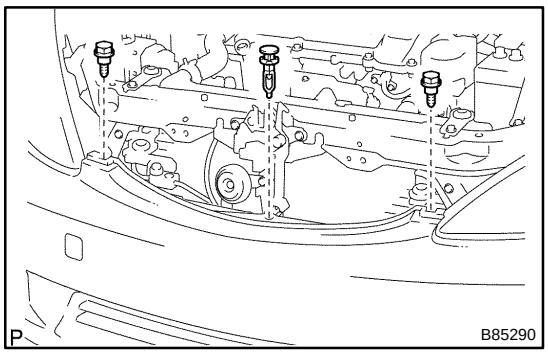

16. INSTALL FRONT BUMPER ASSY

(a) TMMT MADE:

(1) Install the front bumper assy with the 2 bolts.

Torque: 6.5 N·m (66 kgf·cm, 58 in.·lbf)

(2) Install the clip.

17. FOG LAMP AIMING ADJUSTMENT (W/ FOG LAMP) (SEE PAGE 65−17)

REAR BUMPER

COMPONENTS

760BL−05

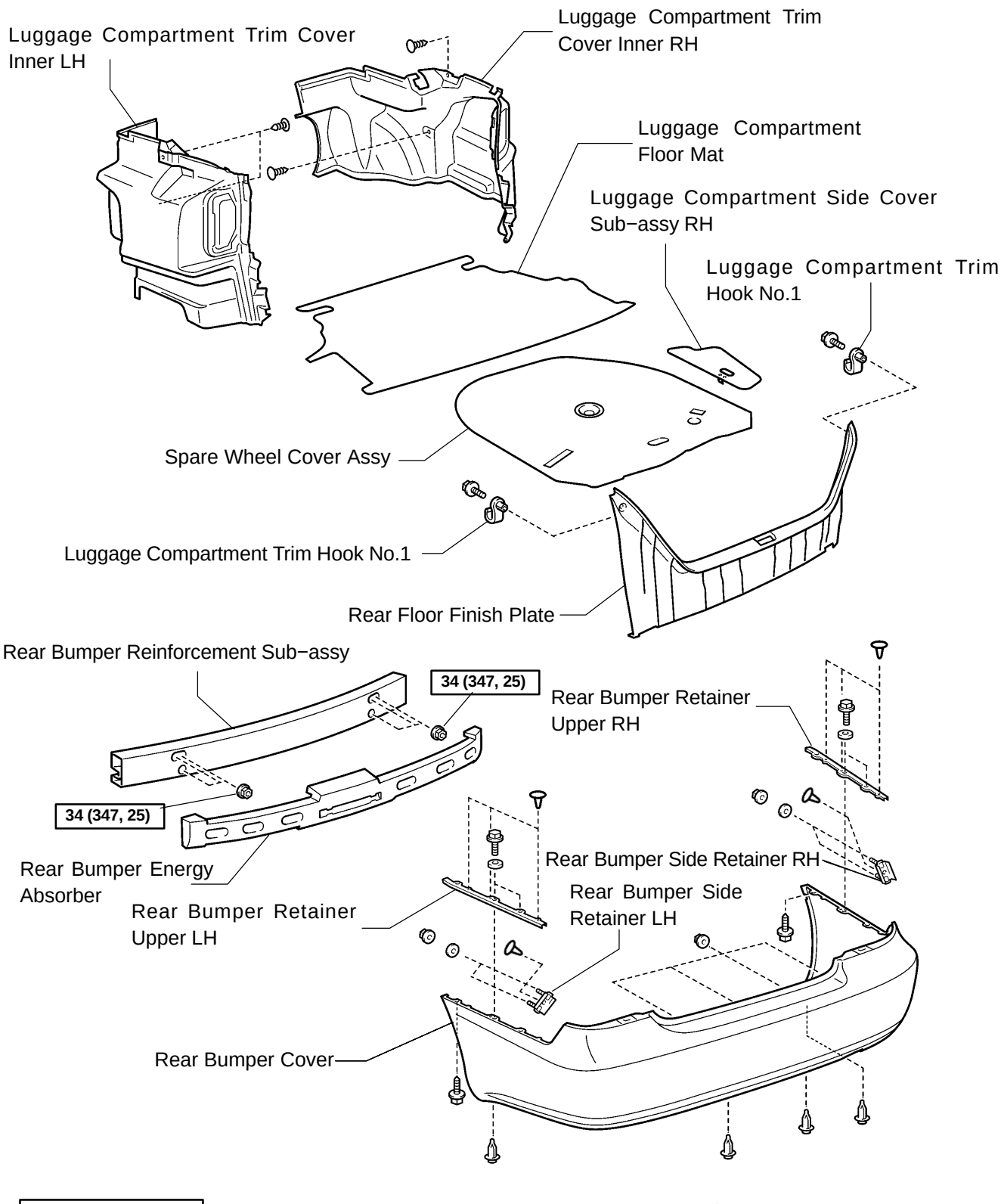

o N·m (kgf·cm, ft·lbf) : Specified torque

B56513

760BM−04

REPLACEMENT

HINT:

The installation is in the reverse order of the removal. However, when there is a special point concerning the installation, it is indicated.

1. REMOVE LUGGAGE COMPARTMENT FLOOR MAT

2. REMOVE SPARE WHEEL COVER ASSY

3. REMOVE LUGGAGE COMPARTMENT SIDE COVER SUB−ASSY RH

4. REMOVE LUGGAGE COMPARTMENT TRIM HOOK NO.1

(a) Remove the 2 bolts and luggage compartment trim hooks.

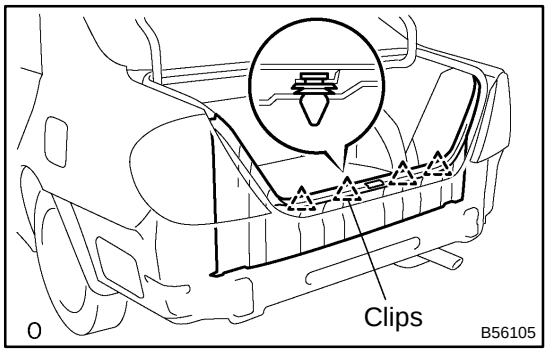

5. REMOVE REAR FLOOR FINISH PLATE

(a) Disengage the clips and remove the rear floor finish plate.

6. REMOVE LUGGAGE COMPARTMENT TRIM COVER INNER RH

(a) Using a clip remover, remove the 2 clips and luggage compartment trim cover inner.

7. REMOVE LUGGAGE COMPARTMENT TRIM COVER INNER LH

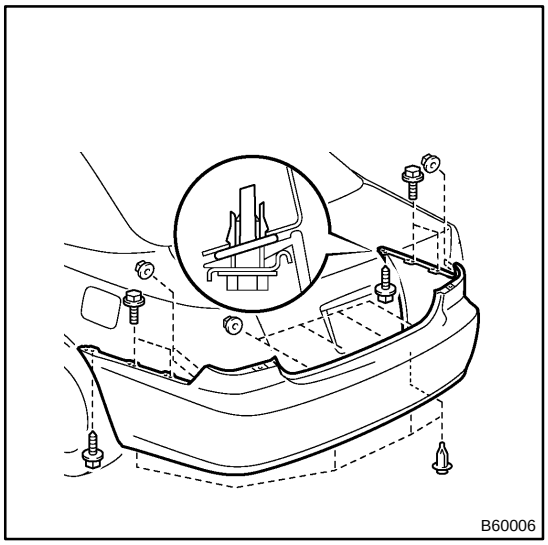

8. REMOVE REAR BUMPER COVER

(a) Remove the 8 nuts, 4 bolts. (Inside)

(b) Remove the 2 screws, 4 clips and rear bumper cover. (outside)

(c) Disengage the rear bumper seal bracket and remove the rear bumper cover.

9. REMOVE REAR BUMPER SIDE RETAINER RH

(a) Remove the clip and rear bumper side retainer. (Only TMC made)

(b) Remove the rivet and rear bumper side retainer. (Only TMMK made)

10. REMOVE REAR BUMPER SIDE RETAINER LH

11. REMOVE REAR BUMPER RETAINER UPPER RH

(a) Remove the 3 clips and rear bumper retainer upper. (Only TMC made)

(b) Remove the 4 rivets and rear bumper retainer upper. (Only TMMK made)

12. REMOVE REAR BUMPER RETAINER UPPER LH

13. REMOVE REAR BUMPER ENERGY ABSORBER

14. REMOVE REAR BUMPER REINFORCEMENT SUB−ASSY

(a) Remove the 6 nuts and rear bumper reinforcement.

15. INSTALL REAR BUMPER REINFORCEMENT SUB−ASSY

(a) Install the front bumper reinforcement with 6 nuts.

Torque: 34 N·m (347 kgf·cm, 25 ft·lbf)

REAR SPOILER SUB−ASSY

760BK−05

REPLACEMENT

HINT:

- The installation procedures are the removal procedures in reverse order. However, only installation procedures requiring additional information are included.
- A bolt without torque specification is a standard bolt (see page 03−2).
- When replacing the moulding, heat the body and spoiler using a heat light.
  Heating temperature:

Item	Temperature
Body	40 to 60 C (104 to 140 F)
Spoiler	20 to 30 C (68 to 86 F)

NOTICE:

Do not heat the body and spoiler excessively.

1. REMOVE LUGGAGE COMPARTMENT DOOR COVER

(a) Remove the 15 clips and door cover.

2. REMOVE REAR SPOILER SUB−ASSY

(a) Remove the 2 nuts.

(b) Put protective tape onto the body.

(c) Using a heat light, heat the spoiler.

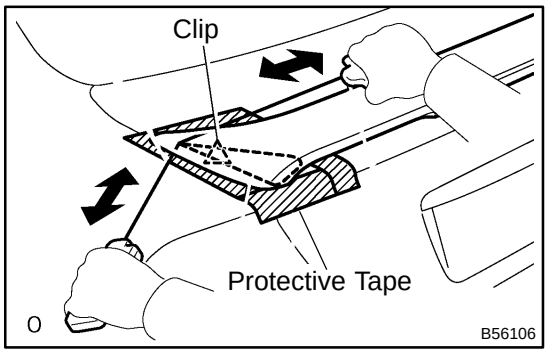

(d) Tie both piano wire ends to wooden blocks or similar objects.

(1) Scrape the adhesive tape off by pulling the piano wire as shown in the illustration.

(2) If reusing the rear spoiler, take care not to damage the rear spoiler.

NOTICE:

Do not damage the body.

(e) Disconnect the connector.

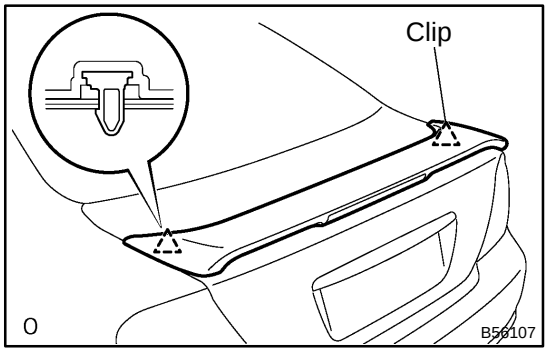

(f) Remove the 2 clips and rear spoiler.

3. REMOVE CENTER STOP LAMP ASSY (See page 65−22)

4. INSTALL REAR SPOILER SUB−ASSY

(a) Using a heat light.

(b) Remove the protective tape from the body.

(c) Wipe off the stains with cleaner.

(d) Clean the rear spoiler (if reusing the spoiler).
  (1) Using a heat light, heat the spoiler.
  (2) Remove the adhesive tape from the rear spoiler.
  (3) Wipe off the stains with cleaner.

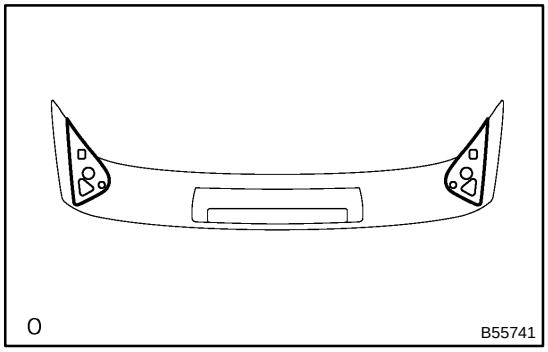

  (4) Install new adhesive tape to the rear spoiler as shown in the illustration.

(e) Using a heat light, heat the body and spoiler.

(f) Install the rear spoiler with 2 nuts.

NAME PLATE

REPLACEMENT

760BZ−04

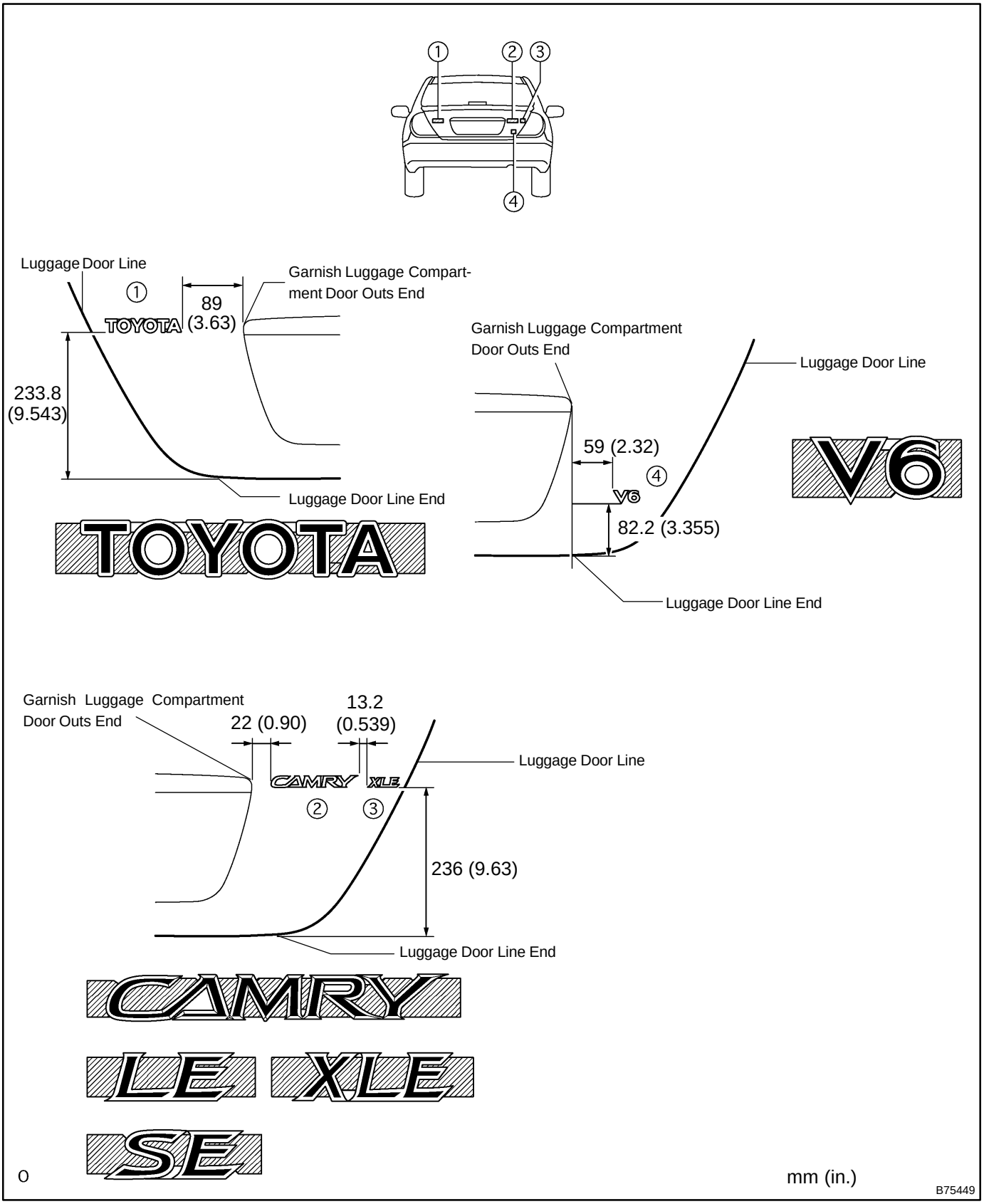

o

mm (in.)

B75449

FRONT DOOR BELT MOULDING ASSY LH

760CA−04

REPLACEMENT

HINT:

- The installation procedures are the removal procedures in reverse order.
- Use the same procedures for the RH side and LH side.

1. **REMOVE POWER WINDOW REGULATOR MASTER SWITCH ASSY (See page 75−8)**
2. **REMOVE FRONT DOOR LOWER FRAME BRACKET GARNISH LH (See page 75−8)**
3. **REMOVE FRONT DOOR INSIDE HANDLE BEZEL PLUG LH (See page 75−8)**
4. **REMOVE FRONT DOOR TRIM BOARD SUB−ASSY LH (See page 75−8)**
5. **REMOVE OUTER REAR VIEW MIRROR ASSY LH (See page 75−8)**

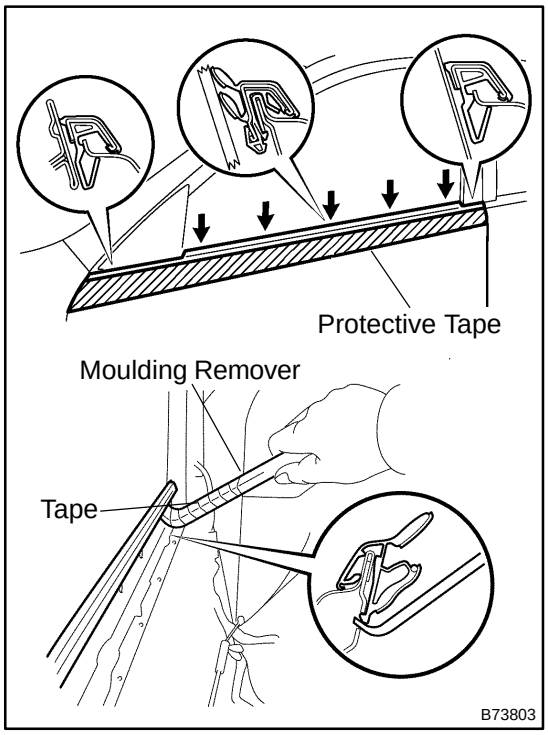

6. **REMOVE FRONT DOOR BELT MOULDING ASSY LH**

(a) Put protective tape under the moulding.

(b) Using a moulding remover, pry out the moulding as shown in the illustration.

HINT:

Tape the remover tip before use.

REAR DOOR BELT MOULDING ASSY LH

760CB−04

REPLACEMENT

HINT:

- The installation procedures are the removal procedures in reverse order.
- Use the same procedures for the RH side and LH side.

1. REMOVE POWER WINDOW REGULATOR SWITCH ASSY (See page 75−16)

2. REMOVE REAR DOOR INSIDE HANDLE BEZEL PLUG LH (See page 75−16)

3. REMOVE REAR DOOR TRIM BOARD SUB−ASSY LH (See page 75−16)

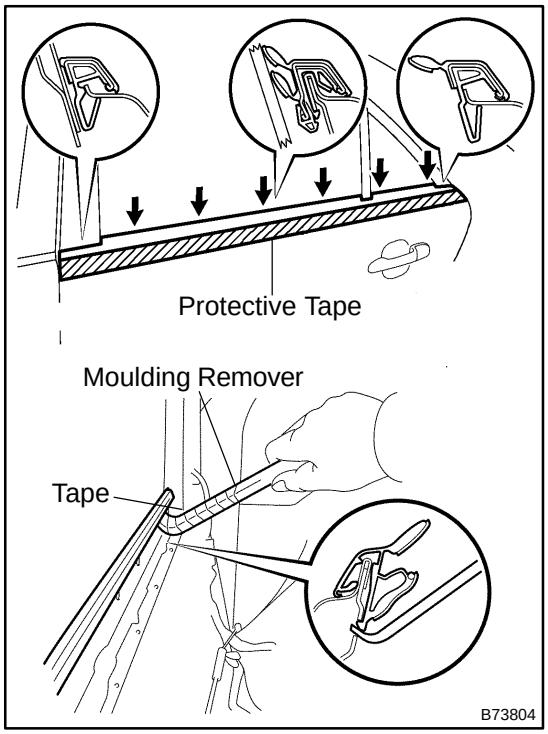

4. REMOVE REAR DOOR BELT MOULDING ASSY LH

(a) Put protective tape under the moulding.

(b) Using a moulding remover, pry out the moulding as shown in the illustration.

HINT:

Tape the remover tip before use.

ROOF DRIP SIDE FINISH MOULDING CENTER LH

760BP−06

REPLACEMENT

HINT:

- Use the same procedures for the RH side and LH side.
- The procedures listed below are for the LH side.
- When replacing the moulding, heat the body and moulding using a heat light.
  Heating temperature:

Item	Temperature
Body	40 to 60 C (104 to 140 F)
Moulding	20 to 30 C (68 to 86 F)

NOTICE:

Do not heat the body and moulding excessively.

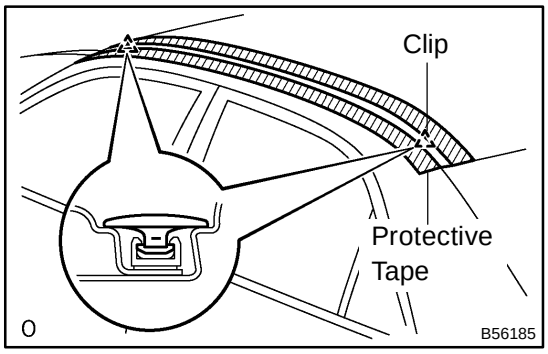

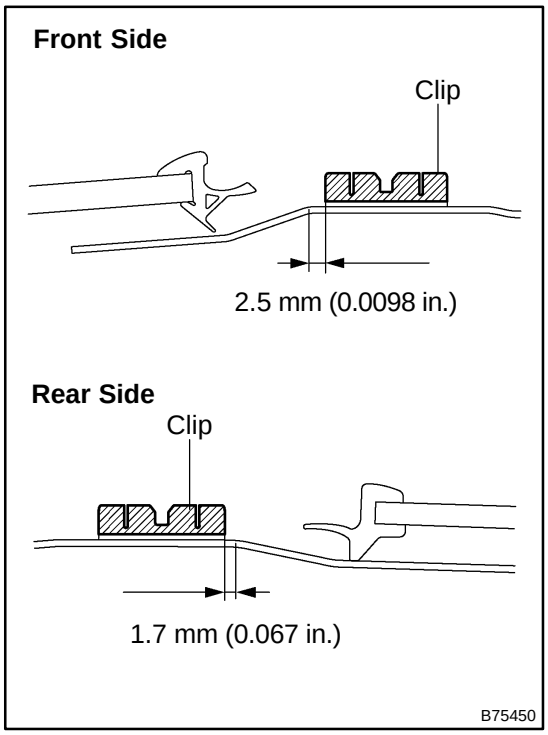

1. REMOVE ROOF DRIP SIDE FINISH MOULDING CENTER LH

(a) Put protective tape around the edges of the moulding.

(b) Using a moulding remover, disengage the moulding's front and rear end clips from the vehicle. Remove the moulding.

NOTICE:

- **Do not remove the clips from vehicle body.**
- **If the clips are damaged or removed accidentally, replace them.**

2. INSTALL ROOF DRIP SIDE FINISH MOULDING CLIP NO.1

HINT:

Use the following steps (a) to (c) replacing the clips with the clips. If not replacing the clips, they are not required.

(a) Remove the tape that remains on the mounting surface of the body, and then clean the surface with white gasoline.

(b) Heat the clip installation surfaces of the body and moulding.

(c) Install new clips in the positions shown in the illustration. Press−fit the clips by hand.

NOTICE:

After press−fitting the clips, wait 30 minutes or more before installing the moulding.

HINT:

- Minimum hardening time: 30 minutes
- Time needed for complete hardening: 24 hours

OUTSIDE MOULDING

7611R−02

REPLACEMENT

HINT:

- The installation procedures are the removal procedures in reverse order. However, only installation procedures requiring additional information are included.
- Use the same procedures for the RH side and LH side.
- When replacing the moulding, heat the body and moulding using a heat light.
  Heating temperature:

Item	Temperature
Body	40 to 60 C (104 to 140 F)
Moulding	20 to 30 C (68 to 86 F)

NOTICE:
Do not heat the body and moulding excessively.

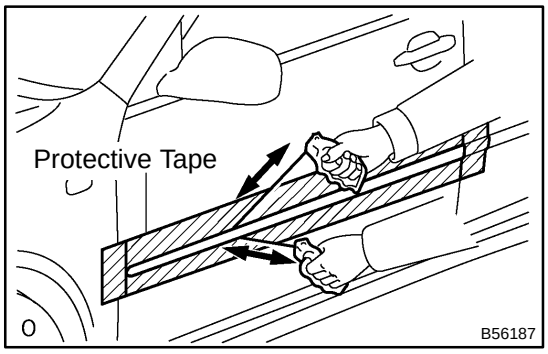

1. REMOVE OUTSIDE MOULDING

(a) Using a heat light heat the moulding.
(b) Tie both piano wire ends to wooden block or similar object.
(c) Scrape the double−sided tape off by pulling the piano wire as shown in the illustration.

NOTICE:

- **If reusing the moulding, take care not to damage the moulding.**
- **Do not damage the body.**

2. INSTALL OUTSIDE MOULDING

(a) Using a heat light, heat the body.
(b) Remove the protective tape from the body.
(c) Wipe off the stains with cleaner.
(d) Clean the moulding (if reusing the moulding).
  (1) Using a heat light, heat the moulding.
  (2) Remove the double−sided tape from the moulding.
  (3) Wipe off the stains with cleaner.

(4) Apply new bouble−sided tape to the moulding as shown in the illustration.

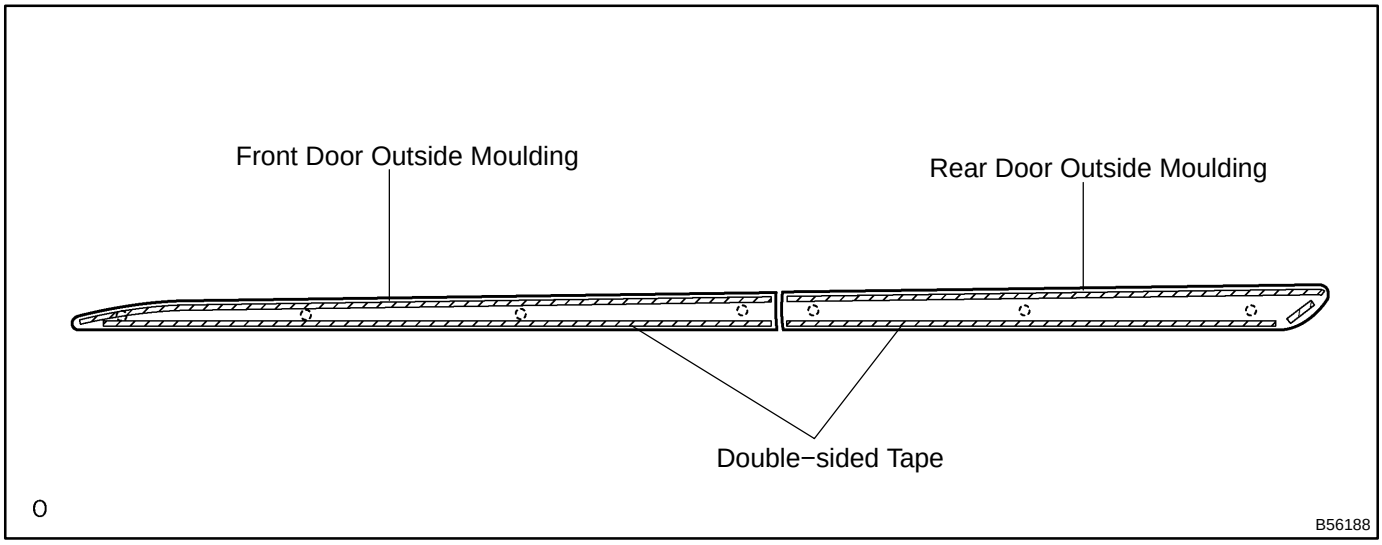

(e) Using a heat light, heat the body and moulding.
(f) Remove the peeling paper from the face of the moulding and attach the moulding securely to the vehicle body.

NOTICE:

Be careful that dirt or foreign objects do not stick to adhesive part when removeing the peeling paper.

(g) Push the moulding to the body.

NOTICE:

Do not apply excessive force onto the moulding. Instead, apply steady pressure with your thumbs.

ROCKER PANEL MOULDING LH

760BR−06

REPLACEMENT

HINT:

- The installation procedures are the removal procedures in reverse order.
- Use the same procedures for the RH side and LH side.

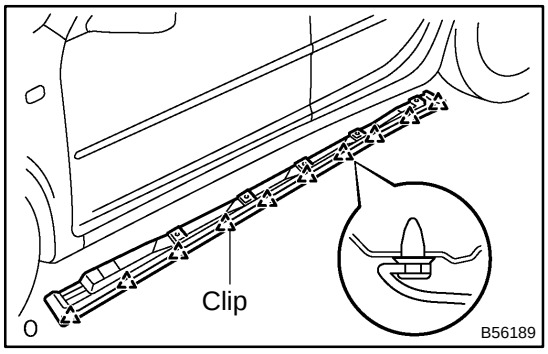

1. REMOVE ROCKER PANEL MOULDING LH

(a) Remove the 6 screws.

(b) Using a screwdriver, pry out the rocker panel moulding.

HINT:

Tape the screwdriver tip before use.

LUGGAGE COMPARTMENT DOOR GARNISH SUB−ASSY OUTSIDE

760BS−06

REPLACEMENT

HINT:

- The installation procedures are the removal procedures in reverse order.
- A bolt without torque specification is a standard bolt (see page 03−2).

1. REMOVE LUGGAGE COMPARTMENT DOOR COVER

(a) Remove the 15 screws and cover.

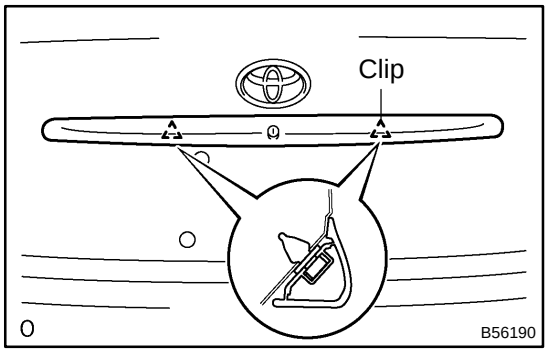

2. REMOVE LUGGAGE COMPARTMENT DOOR GARNISH SUB−ASSY OUTSIDE

(a) Remove the 4 screws.

(b) Using a screwdriver, pry out the garnish.

HINT:

Tape the screwdriver tip before use.

FRONT FLOOR FOOTREST

760BT−06

REPLACEMENT

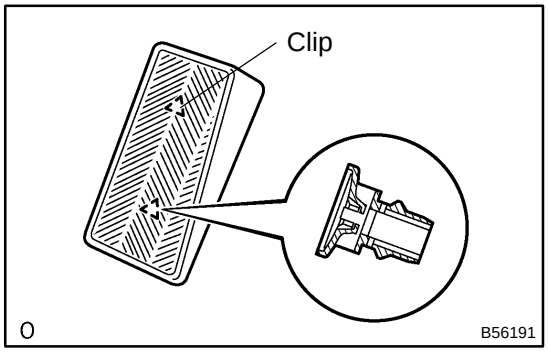

1. REMOVE FRONT FLOOR FOOTREST

(a) Holding the floor mat, disengage the clips from the upper with a screwdriver to remove the front floor footrest.

HINT:

Tape the screwdriver tip before use.

NOTICE:

Warm the inside of the vehicle well before removal.

(b) Disengage the foot rest clips, and then remove the 2 clips from the front floor footrest.

2. INSTALL FRONT FLOOR FOOTREST

(a) Install the footrest clips by engaging the claws with the front floor footrest.

(b) Before installation, check that the part to be engaged with the clips of front floor footrest is not damaged.

NOTICE:

If it is damaged, replace it with a new one.

ROOF HEADLINING ASSY

COMPONENTS

760C7−04

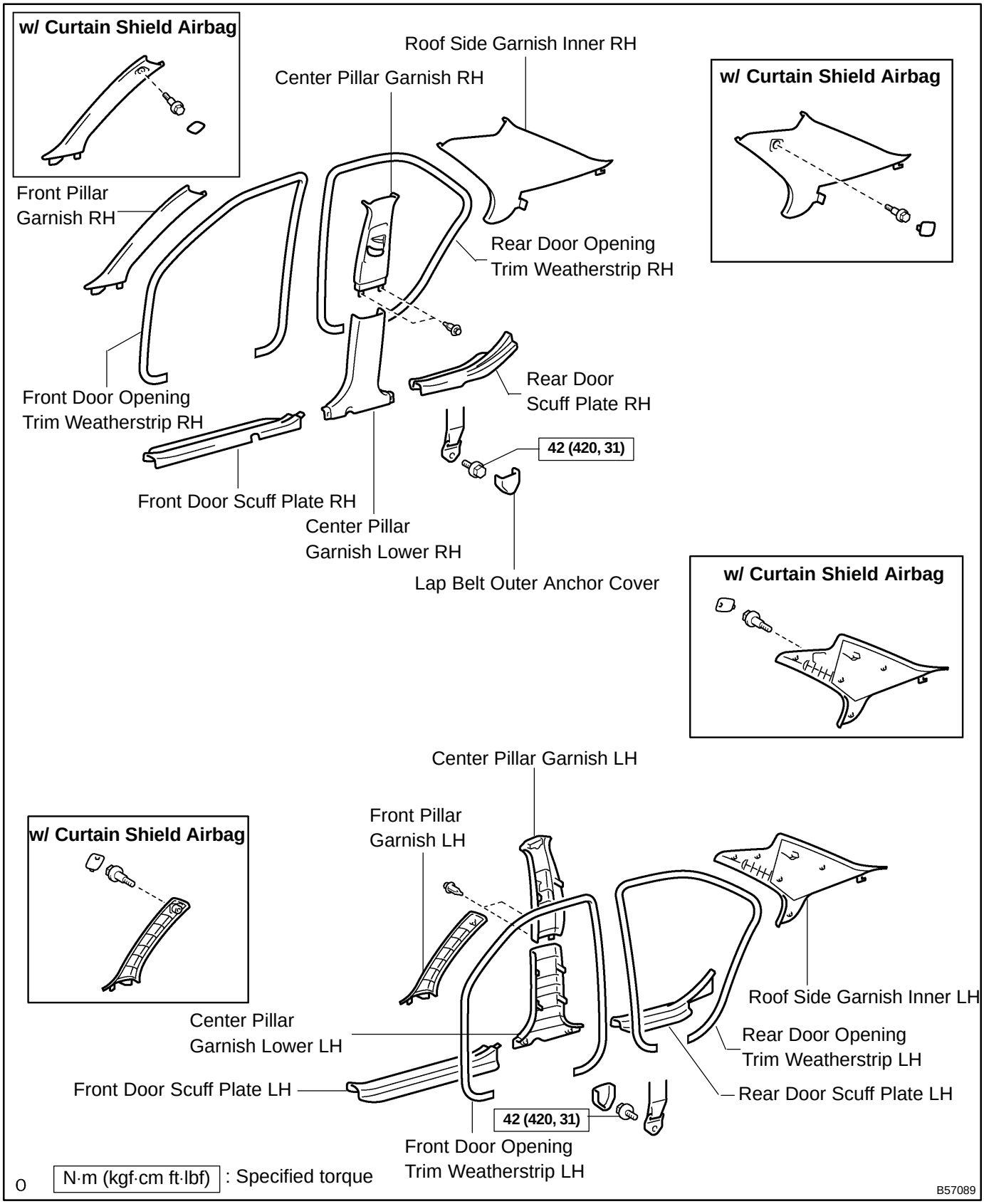

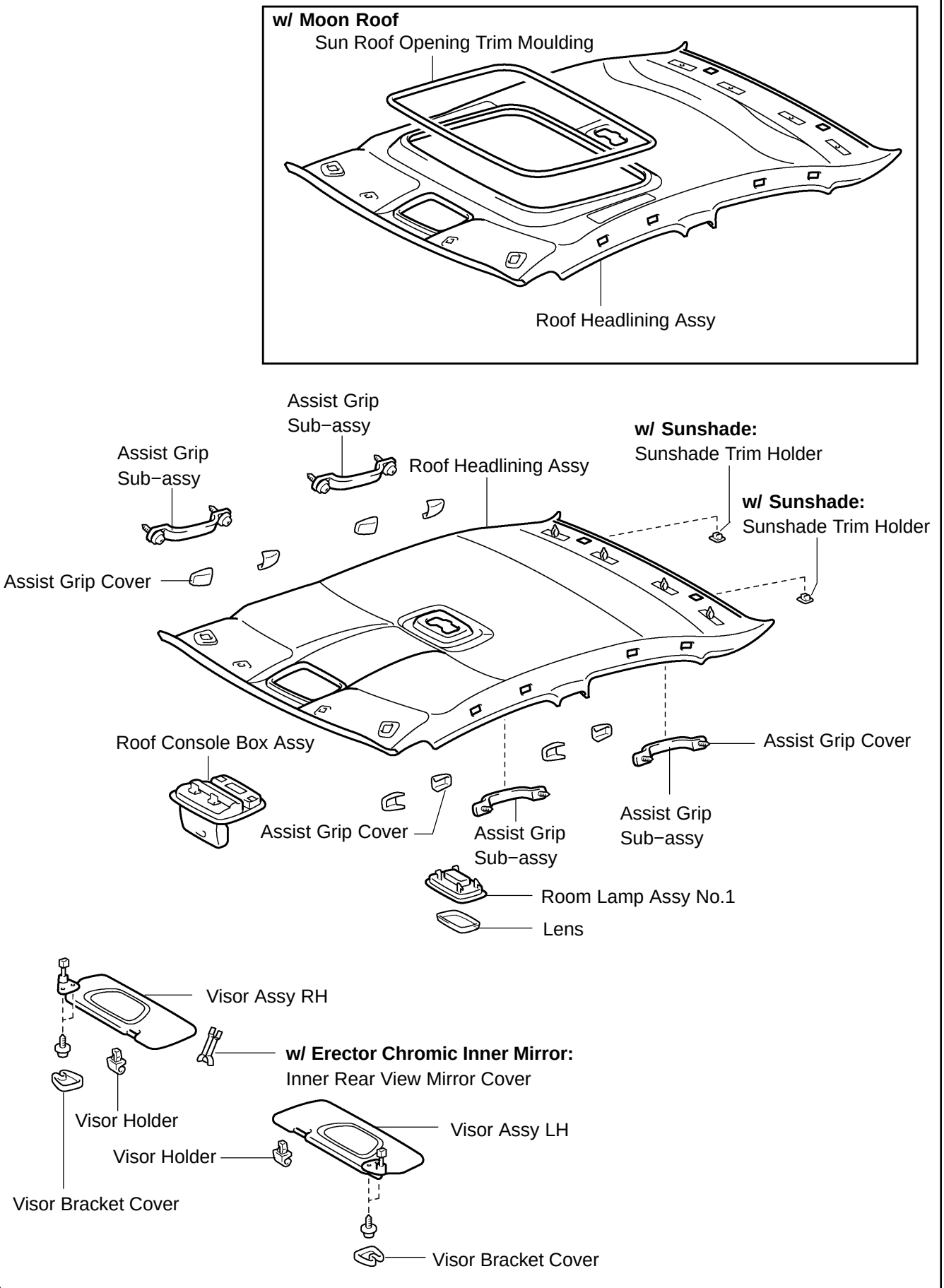
w/ Moon Roof
Sun Roof Opening Trim Moulding
Roof Headlining Assy
Assist Grip Sub−assy
Assist Grip Sub−assy
Roof Headlining Assy
w/ Sunshade:
Sunshade Trim Holder
w/ Sunshade:
Sunshade Trim Holder
Assist Grip Cover
Roof Console Box Assy
Assist Grip Cover
Assist Grip Cover
Assist Grip Sub−assy
Assist Grip Sub−assy
Room Lamp Assy No.1
Lens
Visor Assy RH
w/ Erector Chromic Inner Mirror:
Inner Rear View Mirror Cover
Visor Holder
Visor Assy LH
Visor Holder
Visor Bracket Cover
Visor Bracket Cover
B57088

760C8−04

REPLACEMENT

HINT:

- The installation is in the reverse order of the removal. However, when there is a special point concerning the installation, it is indicated.
- On the RH side, use the same procedures as on the LH side.

1. **REMOVE FRONT SEAT ASSEMBLY RH**
   (Power Seat Type: See page 72−23, Manual Seat Type: See page 72−15)
2. **REMOVE FRONT SEAT ASSEMBLY LH**
   (Power Seat Type: See page 72−23, Manual Seat Type: See page 72−15)
3. **REMOVE BENCH TYPE REAR SEAT CUSHION ASSY (See page 72−32)**
4. **REMOVE REAR SIDE SEAT BACK ASSY RH (See page 72−32)**
5. **REMOVE REAR SIDE SEAT BACK ASSY LH (See page 72−32)**
6. **REMOVE SEPARATE TYPE REAR SEAT BACK ASSY RH (See page 72−32)**
7. **REMOVE SEPARATE TYPE REAR SEAT BACK ASSY LH (See page 72−32)**
8. **REMOVE CONSOLE PANEL UPPER REAR (See page 71−16)**
9. **REMOVE RR CONSOLE BOX (See page 71−16)**
10. **REMOVE CONSOLE PANEL UPPER (See page 71−16)**
11. **REMOVE CONSOLE BOX FRONT (See page 71−16)**
12. **REMOVE CONSOLE BOX DUCT NO.1 (See page 55−34)**
13. **REMOVE AIR DUCT REAR NO.1 (See page 55−34)**
14. **REMOVE AIR DUCT REAR NO.2 (See page 55−34)**
15. **REMOVE FLOOR SHIFT SHIFT LEVER ASSY (MANUAL TRANSAXLE) (See Page 41−5)**
16. **REMOVE FLOOR SHIFT ASSY (AUTOMATIC TRANSAXLE) (See Page 40−54)**

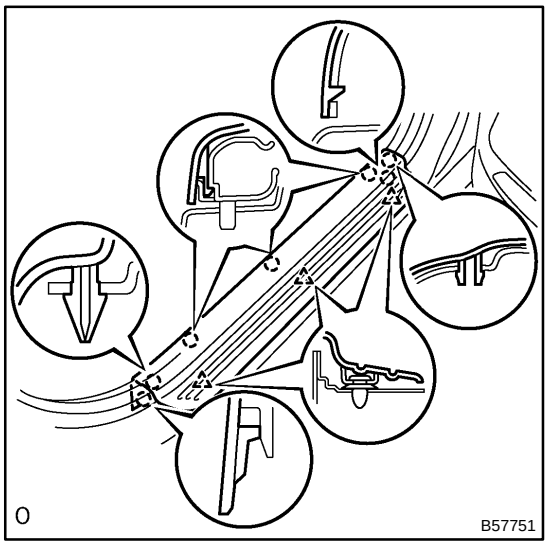

17. **REMOVE FRONT DOOR SCUFF PLATE RH**

(a) Using a screwdriver, remove the front door scuff plate.

HINT:

Tape the screwdriver tip before use.

(b) Employ the same manner described above to the other side.

18. **REMOVE FRONT DOOR SCUFF PLATE LH**

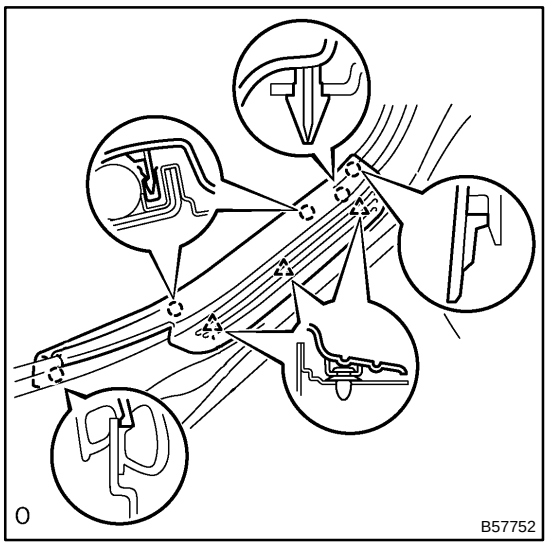

19. REMOVE REAR DOOR SCUFF PLATE RH

(a) Using a screwdriver, remove the rear door scuff plate.

HINT:

Tape the screwdriver tip before use.

(b) Employ the same manner described above to the other side.

20. REMOVE REAR DOOR SCUFF PLATE LH

21. REMOVE FRONT DOOR OPENING TRIM WEATHERSTRIP RH

22. REMOVE FRONT DOOR OPENING TRIM WEATHERSTRIP LH

23. REMOVE REAR DOOR OPENING TRIM WEATHERSTRIP RH

24. REMOVE REAR DOOR OPENING TRIM WEATHERSTRIP LH

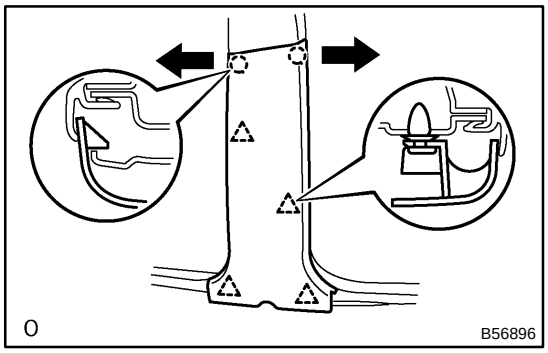

25. REMOVE CENTER PILLAR GARNISH LOWER RH

(a) Pull the center pillar lower garnish upward to remove it.

(b) Employ the same manner described above to the other side.

26. REMOVE CENTER PILLAR GARNISH LOWER LH

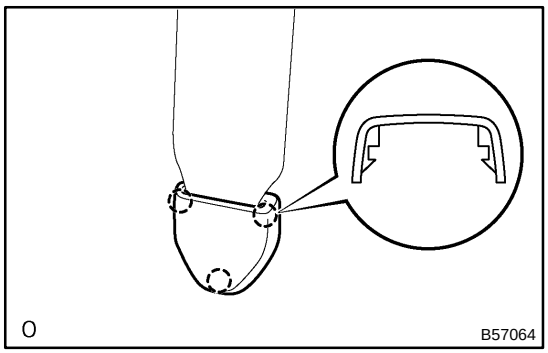

27. REMOVE CENTER PILLAR GARNISH UPPER RH

(a) Using a screwdriver, remove the lap belt outer anchor cover.

HINT:

Tape the screwdriver tip before use.

(b) Remove the bolt and front seat outer belt floor anchor.

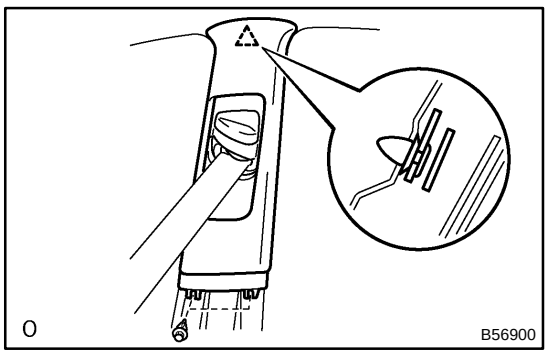

(c) Remove the 2 clips

(d) Using a screwdriver, remove the center pillar upper garnish.

HINT:

Tape the screwdriver tip before use.

(e) Employ the same manner described above to the other side.

28. REMOVE CENTER PILLAR GARNISH UPPER LH

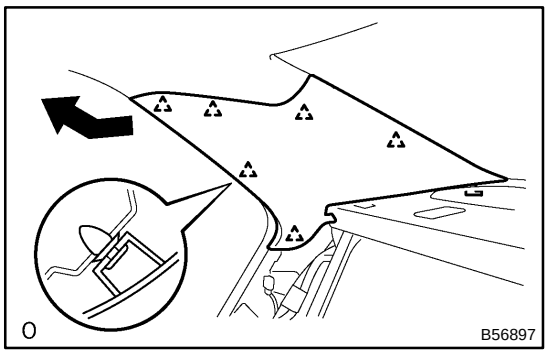

29. REMOVE ROOF SIDE GARNISH INNER RH (W/O CURTAIN SHIELD AIR BAG)

(a) Using a screwdriver, remove the roof side garnish inner.

HINT:

Tape the screwdriver tip before use.

(b) Employ the same manner described above to the other side.

30. REMOVE ROOF SIDE GARNISH INNER LH (W/O CURTAIN SHIELD AIR BAG)

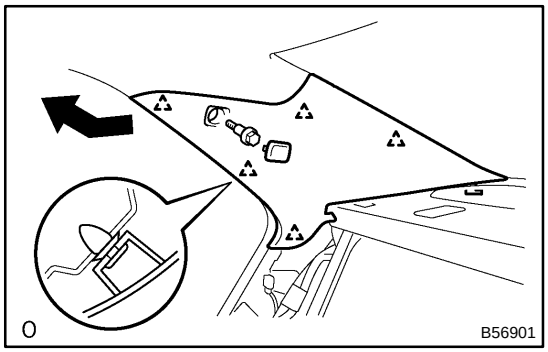

31. REMOVE ROOF SIDE GARNISH INNER RH (W/ CURTAIN SHIELD AIR BAG)

(a) Using a screwdriver, remove the roof side garnish inner cover.

HINT:

Tape the screwdriver tip before use.

(b) Remove the bolt.

(c) Using a screwdriver, remove the roof side garnish inner.

HINT:

Tape the screwdriver tip before use.

32. REMOVE ROOF SIDE GARNISH INNER LH (W/ CURTAIN SHIELD AIR BAG)

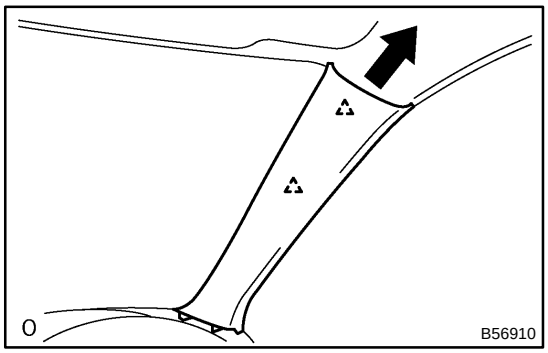

33. REMOVE FRONT PILLAR GARNISH RH (W/O CURTAIN SHIELD AIR BAG)

(a) Using a screwdriver, remove the front pillar garnish.

HINT:

Tape the screwdriver tip before use.

(b) Employ the same manner described above to the other side.

34. REMOVE FRONT PILLAR GARNISH LH (W/O CURTAIN SHIELD AIR BAG)

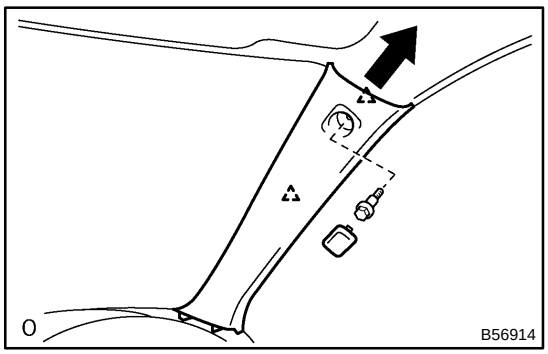

35. REMOVE FRONT PILLAR GARNISH RH (W/ CURTAIN SHIELD AIR BAG)

(a) Using a screwdriver, remove the front pillar garnish cover.

HINT:

Tape the screwdriver tip before use.

(b) Remove the bolt.

(c) Using a screwdriver, remove the front pillar garnish.

HINT:

Tape the screwdriver tip before use.

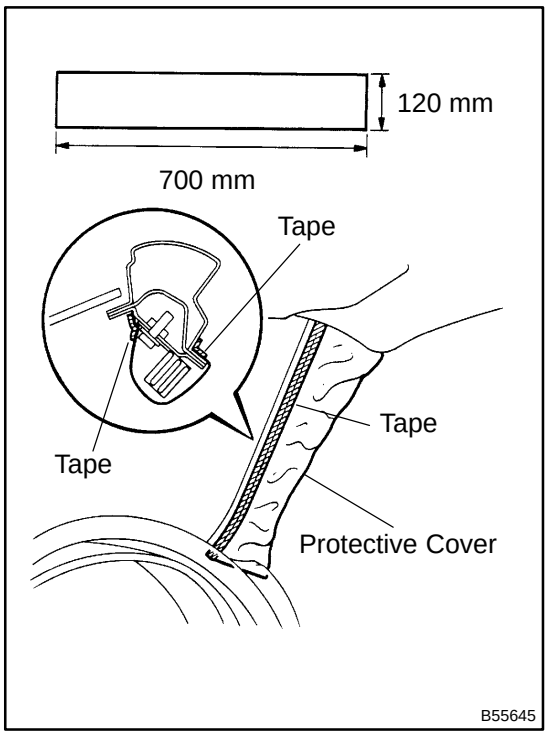

(d) Protect the curtain shield airbag.

NOTICE:

Cover the curtain shield airbag with the protection cover as soon as the front pillar garnish is removed.

(1) Cover the airbag with cloth or nylon of 700 mm (27.56 in.) × 120 mm (4.72 in.) and fix the ends of the cover with tape, as shown in the illustration.

(e) Employ the same manner described above to the other side.

36. REMOVE FRONT PILLAR GARNISH LH (W/ CURTAIN SHIELD AIR BAG)

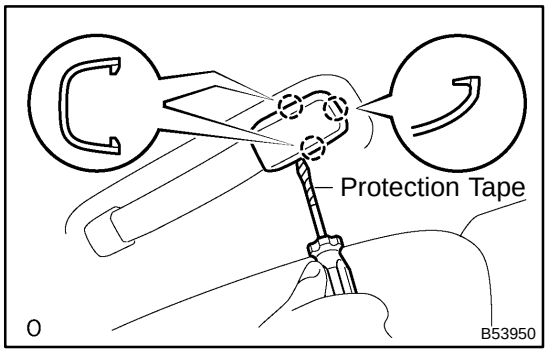

37. REMOVE ASSIST GRIP SUB−ASSY

(a) Using a screwdriver, remove the assist grip cover.

HINT:

Tape the screwdriver tip before use.

(b) Remove the 2 screws and assist grip.

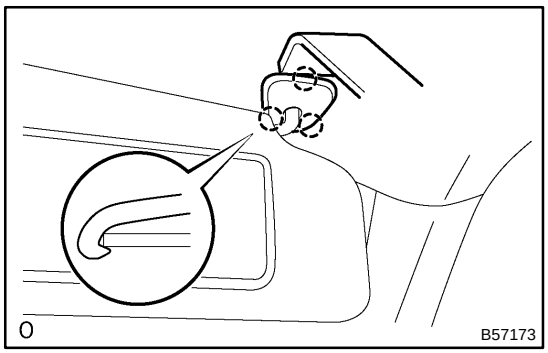

38. REMOVE RH VISOR ASSY

(a) Using a moulding remover, remove the visor bracket cover.

HINT:

Tape the screwdriver tip before use.

(b) Remove the 2 screws and assist grip.

39. REMOVE LH VISOR ASSY

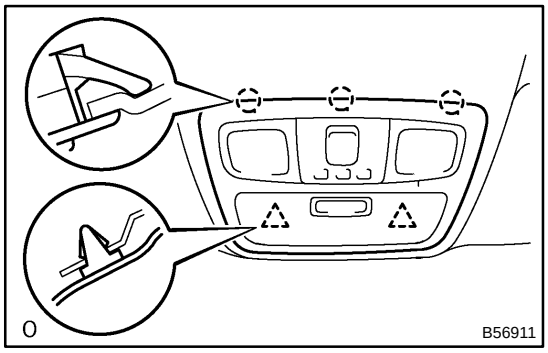

40. REMOVE ROOF CONSOLE BOX ASSY

(a) Using a screwdriver, remove the roof console box then disconnect the connector.

HINT:

Tape the screwdriver tip before use.

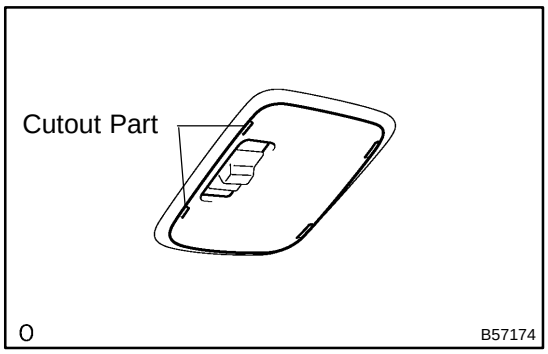

41. REMOVE ROOM LAMP ASSY NO.1

(a) Using a screwdriver, remove the lens.

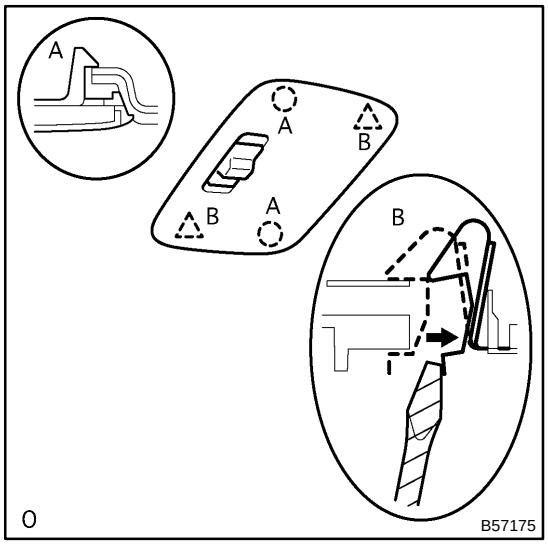

(b) Using a screwdriver, remove the room lamp assembly No.1 then disconnect the connector.

HINT:

Tape the screwdriver tip before use.

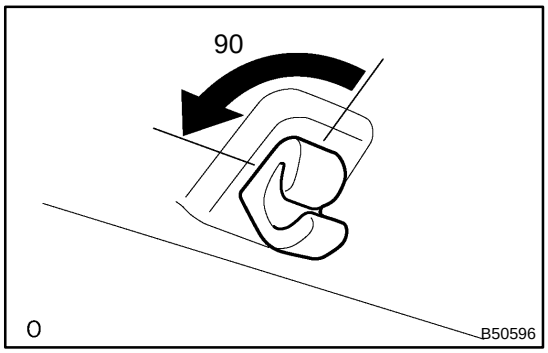

42. REMOVE VISOR HOLDER

(a) Remove the holder of the sun visor by turning it to the left.

43. REMOVE SUN ROOF OPENING TRIM MOULDING (W/ SLIDING ROOF)

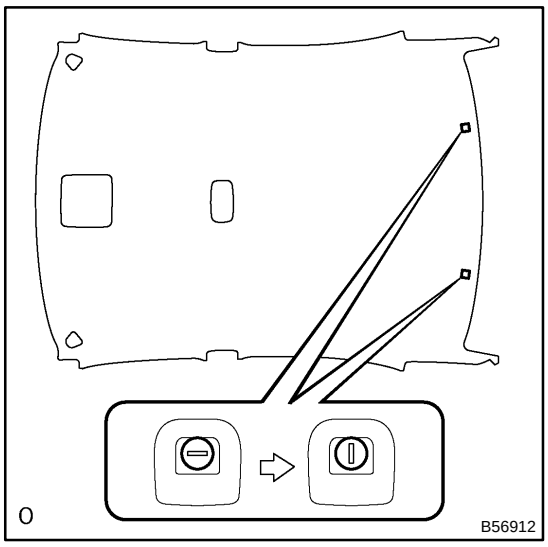

44. REMOVE ROOF HEADLINING ASSY

(a) Remove the 2 sunshade trim holders.

(b) w/ Erector chromic inner mirror:
Remove the inner rear view mirror cover.

(c) Tear off the tape on the adhered part of the wire harness.

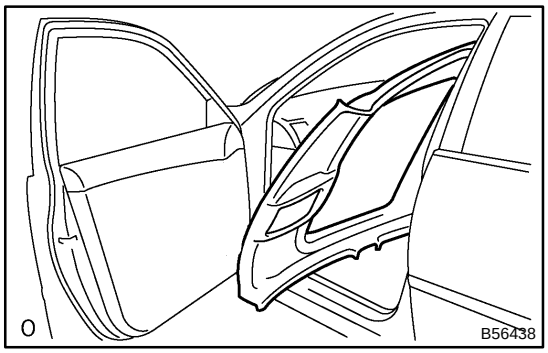

(d) Remove the headlining assembly from the passenger's door.

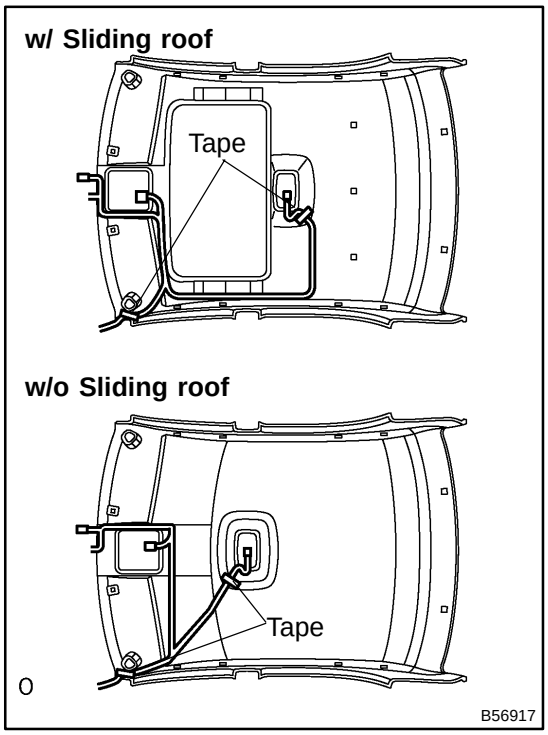

45. INSTALL ROOF HEADLINING ASSY

(a) Align the markings, then install the wire harness with tape.

HINT:

Be careful for dirt or foreign objects not to stick to the adhered part when peeling the double−stick tape.

(b) Attach the roof wire harness across the adhered part

NOTICE:

Roof wire harness should be attached securely.

46. INSTALL FRONT SEAT ASSEMBLY LH
(Power Seat Type: See page 72−23, Manual Seat Type: See page 72−15)

47. INSTALL FRONT SEAT ASSEMBLY RH
(Power Seat Type: See page 72−23, Manual Seat Type: See page 72−15)

IGNITION OR STARTER SWITCH ASSY

8001R−04

REPLACEMENT

1. REMOVE INSTRUMENT PANEL SUB−ASSY UPPER(See page 71−16)

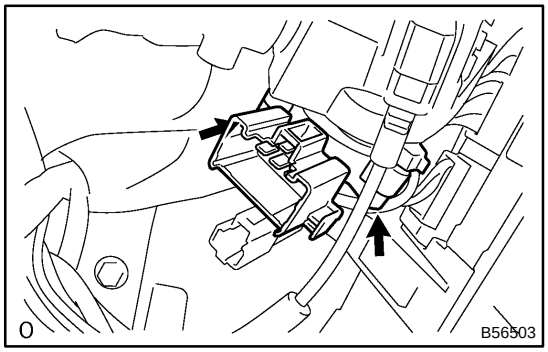

2. REMOVE IGNITION OR STARTER SWITCH ASSY

(a) Disconnect the ignition switch connector and unlock warning switch connector.

(b) Remove the clamp.

(c) Remove the 2 screws and ignition switch.

8001S−02

INSPECTION

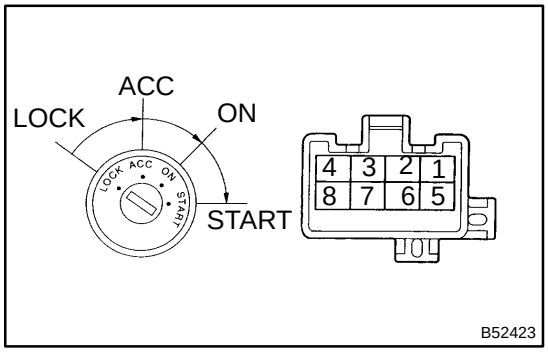

1. INSPECT IGNITION OR STARTER SWITCH ASSY

(a) Inspect the ignition switch continuity.

Standard:

Switch position	Tester connection	Specified condition
LOCK	−	No continuity
ACC	2 ⇔ 3	Continuity
ON	2 ⇔ 3 ⇔ 4 6 ⇔ 7	Continuity
START	1 ⇔ 2 ⇔ 4 6 ⇔ 7 ⇔ 8	Continuity

If the continuity is not as specified, replace the switch.

CRUISE CONTROL MAIN SWITCH ASSY

8205N−01

REPLACEMENT

HINT:

Installation is in the reverse order of removal.

1. **DISCONNECT BATTERY NEGATIVE TERMINAL (SEE PAGE 60−1)**
2. **REMOVE STEERING WHEEL COVER LOWER NO.2**
3. **REMOVE STEERING WHEEL COVER LOWER NO.3**
4. **REMOVE HORN BUTTON ASSY (SEE PAGE 60−25)**

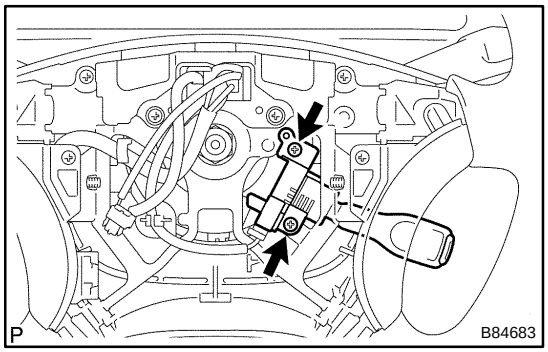

5. **REMOVE CRUISE CONTROL MAIN SWITCH ASSY**

(a) Disconnect the connector.

(b) Remove the 2 screws.

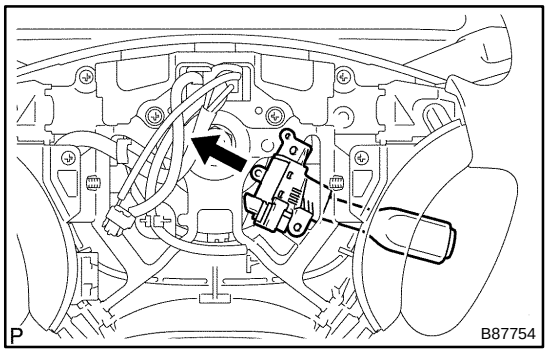

(c) Pull out the cruise control main switch assy in the direction shown by the arrow in the illustration.

6. **INSTALL HORN BUTTON ASSY (SEE PAGE 60−25)**
7. **INSPECT HORN BUTTON ASSY (SEE PAGE 60−17)**
8. **CONNECT BATTERY NEGATIVE TERMINAL**
9. **INSPECT SRS WARNING LIGHT (SEE PAGE 05−1456)**

CLUTCH SWITCH ASSY

8201K−03

REPLACEMENT

HINT:

Installation is in the reverse order of removal.

1. **REMOVE FRONT DOOR SCUFF PLATE LH (SEE PAGE 71−16)**
2. **REMOVE COWL SIDE TRIM SUB−ASSY LH (SEE PAGE 71−16)**
3. **REMOVE INSTRUMENT PANEL SUB−ASSY UPPER (SEE PAGE 71−16)**
4. **REMOVE INSTRUMENT PNL INSERT SUB−ASSY LWR LH (SEE PAGE 71−16)**

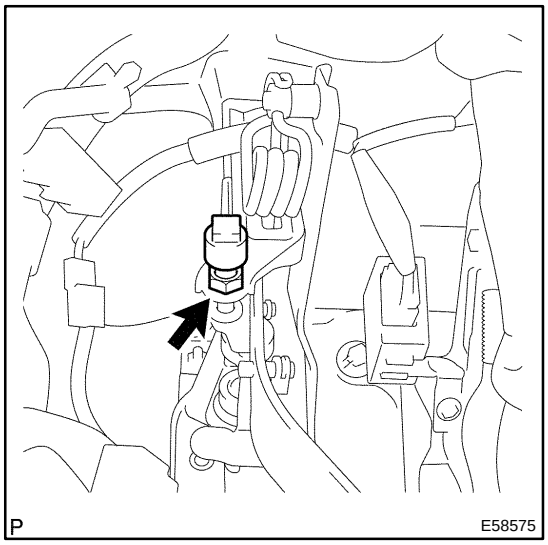

5. **REMOVE CLUTCH SWITCH ASSY**

(a) Disconnect the connector.

(b) Loosen the nut and remove the clutch switch assy.

OUTSIDE VEHICLE

9900V−28

GENERAL MAINTENANCE

Performing these maintenance checks on the vehicle is the owner's responsibility. The owner may perform the maintenance or take the vehicle to a service center.

Check the parts of the vehicle described below on a daily basis. In most cases, special tools are not required. It is recommended that the owner perform these checks.

The procedures for general maintenance are as follows.

1. GENERAL NOTES

- Maintenance requirements vary depending on the country.
- Check the maintenance schedule in the owner's manual supplement.
- Following the maintenance schedule is mandatory.
- Determine the appropriate time to service the vehicle using either miles driven or time (month) elapsed, whichever reaches the specification first.
- Maintain similar intervals between periodic maintenance unless noted.
- Failing to check each vehicle part could lead to poor engine performance and increase exhaust emissions.

2. TIRES

(a) Check the tire pressure with a gauge. Make adjustments if necessary.

(b) Check the surfaces of tires for cuts, damage or excessive wear.

3. WHEEL NUTS

(a) Check for nuts that are loose or missing. Tighten them if necessary.

4. TIRE ROTATION

(a) Check the maintenance schedule in the owner's manual supplement.

5. WINDSHIELD WIPER BLADES

(a) Check the blades for wear or cracks when they are unable to wipe the windshield clean. Replace them if necessary.

6. FLUID LEAKS

(a) Check under the vehicle for leaking fuel, oil, water and other fluids.

(b) If you smell gasoline fumes or notice any leaks, locate the cause and correct it.

7. DOORS AND ENGINE HOOD

(a) Check if all of the doors and the tailgate operate smoothly and if all the latches lock securely.

(b) When the primary latch is released, check if the engine hood secondary latch prevents the hood from opening.

INSIDE VEHICLE

9900W−28

GENERAL MAINTENANCE

Performing these maintenance checks on the vehicle is the owner's responsibility. The owner may perform the maintenance or take the vehicle to a service center.
Check the parts of the vehicle described below on a daily basis. In most cases, special tools are not required. It is recommended that the owner perform these checks.
The procedures for general maintenance are as follows.

1. GENERAL NOTES

- Maintenance requirements vary depending on the country.
- Check the maintenance schedule in the owner's manual supplement.
- Following the maintenance schedule is mandatory.
- Determine the appropriate time to service the vehicle using either miles driven or time (month) elapsed, whichever reaches the specification first.
- Maintain similar intervals between periodic maintenance unless noted.
- Failng to check each vehicle part could lead to poor engine performance and increase exhaust emissions.

2. LIGHTS

(a) Check if the headlights, stop lights, taillights, turn signal lights, and other lights illuminate or blink. Also, check if they have enough brightness.
(b) Check if the headlights are aimed properly.

3. WARNING LIGHTS AND BUZZERS

(a) Check if all the warning lights and buzzers are working.

4. HORN

(a) Check if the horn is working.

5. WINDSHIELD GLASS

(a) Check for scratches, pits or abrasions.

6. WINDSHIELD WIPER AND WASHER

(a) Check if the wind washers are aimed properly. Also, check if the washer fluid hits the center of the operating rage of each wiper on the windshield.
(b) Check if the wipers streak or not.

7. WINDSHIELD DEFROSTER

(a) When the heater or air conditioner is on the defroster setting, check if air comes out of the defroster outlet.

8. REAR VIEW MIRROR

(a) Check if the rear view mirror is securely mounted.

9. SUN VISORS

(a) Check if the sun visors move freely and are securely mounted.

10. STEERING WHEEL

(a) Check if the steering wheel has the proper freeplay. Also check for steering difficulty, freeplay in the steering wheel and unusual noises.

11. SEATS

(a) Check if the seat adjusters, seatback recliner and other front seat controls operate smoothly.
(b) Check if all the latches lock securely in all positions.
(c) Check if the locks hold securely in all latched positions.
(d) Check if the head restraints move up and down smoothly and if the locks hold securely in all latched positions.
(e) When the rear seatbacks are folded down, check if the latches lock securely.

12. SEAT BELTS

(a) Check that the seat belt system such as the buckles, retractors and anchors operate properly and smoothly.

(b) Check if the belt webbing is not cut, frayed, worn or damaged. Replace if neccessary.

13. ACCELERATOR PEDAL

(a) Check the pedal for smooth operation, uneven pedal effort and catching.

14. CLUTCH PEDAL (See page 42−7)

(a) Check the pedal for smooth operation.

(b) Check if the pedal has the proper freeplay.

15. BRAKE PEDAL (See page 32−14)

(a) Check the pedal for smooth operation.

(b) Check if the pedal has the proper reserve distance and freeplay.

(c) Start the engine and check the brake booster function.

16. BRAKES

(a) In a safe place, check if the vehicle remains straight when applying the brakes.

17. PARKING BRAKE (See page 33−2)

(a) Check that the lever has the proper range of motion.

(b) On a low incline, check if the parking brake alone can stabilize the vehicle.

18. AUTOMATIC TRANSAXLE ”PARK” MECHANISM

(a) Check the lock release button of the selector lever for proper and smooth operation.

(b) On a low incline, check if the parking brake alone can satabilize the vehicle.

UNDER HOOD

9900X−15

GENERAL MAINTENANCE

1. GENERAL NOTES

- Maintenance items may vary from country to country. Check the owner's manual supplement in which the maintenance schedule is shown.
- Every service item in the periodic maintenance schedule must be performed.
- Periodic maintenance service must be performed according to whichever interval in the periodic maintenance schedule occurs first, the odometer reading (miles) or the time interval (months).
- Maintenance service after the last period should be performed at the same interval as before unless noted.
- Failure to do even one of the items can cause the engine to run poorly and increase the exhaust emissions.

2. WINDSHIELD WASHER FLUID

(a) Check if there is sufficient fluid in the tank.

3. ENGINE COOLANT LEVEL

(a) Check if the coolant level is between the "FULL" and "LOW" lines on the see−through reservoir.

4. RADIATOR AND HOSES

(a) Check if the front of the radiator is clean and not blocked by leaves, dirt or bugs.
(b) Check the hoses for cracks, kinks, rot or loose connections.

5. BATTERY ELECTROLYTE LEVEL

(a) Check if the electrolyte level of all the battery cells is between the upper and lower level lines on the case.

6. BRAKE FLUID LEVEL

(a) Check if the brake fluid levels are near the upper level line on the see−through reservoirs.

7. ENGINE DRIVE BELT

(a) Check the drive belt for fraying, cracks, wear or oiliness.

8. ENGINE OIL LEVEL

(a) Check the level on the dipstick with the engine turned off.

9. POWER STEERING FLUID LEVEL

(a) Check the level on the dipstick.
(b) The level should be in the "HOT" or "COLD" range depending on the fluid temperature.

10. AUTOMATIC TRANSMISSION FLUID LEVEL

(a) Park the vehicle on a level surface.
(b) With the engine idling and the parking brake applied, shift the selector into all the positions from "P" to "L", and then shift into the "P" position.
(c) Pull out the dipstick and wipe off the fluid with a clean shop rag. Re−insert the dipstick and check that the fluid level is in the "HOT" range.
(d) Perform this check with the fluid at the normal driving temperature: 70 to 80˚C (158 to 176˚F).

HINT:

Wait until the engine cools down (approx. 30 min.) before checking the fluid level after extended driving at high speed, in hot weather, in heavy traffic or pulling a trailer.

11. EXHAUST SYSTEM

(a) If any change in the sound of the exhaust or the smell of the exhaust fumes is noticed, locate and correct the cause.

ENGINE

ON−VEHICLE INSPECTION

9900Y−15

HINT:

Inspect these items on a cooled down engine.

1. REPLACE TIMING CHAIN (2AZ−FE:14−75)

2. REPLACE TIMING BELT (1MZ−FE/3MZ−FE: See page 14−218)

3. INSPECT DRIVE BELT (2AZ−FE: See page 14−5, 1MZ−FE/3MZ−FE: See page 14−140)

4. REPLACE SPARK PLUGS (2AZ−FE: See page 18−3, 1MZ−FE/3MZ−FE: See page 18−9)

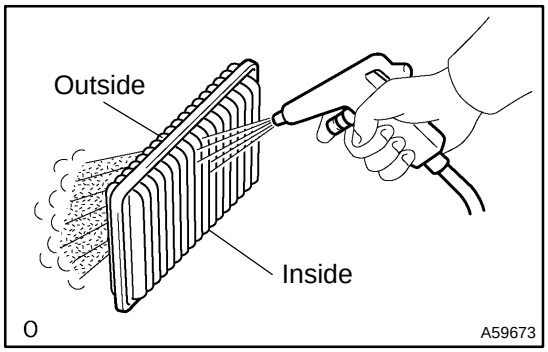

5. INSPECT AIR FILTER

(a) Remove the air filter.

(b) Visually check that the air filter is not excessively damaged or oily.

If necessary, replace the air filter.

(c) Clean the filter with compressed air.

First blow from the inside thoroughly, and then blow from the outside of the filter.

(d) Reinstall the air filter.

6. REPLACE AIR FILTER

(a) Replace the air filter with a new one.

7. REPLACE ENGINE OIL AND OIL FILTER
(2AZ−FE: See page 17−3, 1MZ−FE/3MZ−FE: See page 17−25)

8. REPLACE ENGINE COOLANT
(2AZ−FE: See page 16−6, 1MZ−FE/3MZ−FE: See page 16−27)

9. INSPECT GASKET IN FUEL TANK CAP
(2AZ−FE: See page 12−1, 1MZ−FE/3MZ−FE: See page 12−18)

10. INSPECT FUEL LINES AND CONNECTIONS AND FUEL TANK VAPOR VENT SYSTEM HOSES AND FUEL TANK BANDS

(a) Visually check the fuel lines for cracks, leakage, loose connections, deformation or tank band looseness.

11. INSPECT EXHAUST PIPES AND MOUNTINGS

(a) Visually check the pipes, hangers and connections for severe corrosion, leaks or damage.

12. INSPECT VALVE CLEARANCE
(2AZ−FE: See page 14−7, 1MZ−FE/3MZ−FE: See page 14−142)

BRAKE

ON−VEHICLE INSPECTION

9900Z−22

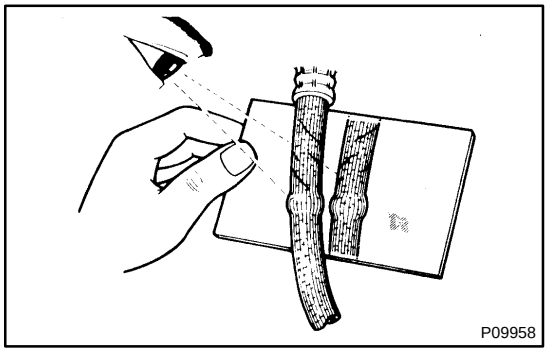

1. INSPECT BRAKE LINE PIPES AND HOSES

HINT:

Work in a well−lighted area. Turn the front wheels fully to the right or left before beginning.

(a) Check all the brake lines and hoses for:
- Damage
- Wear
- Deformation
- Cracks
- Corrosion
- Leaks
- Bends
- Twists

(b) Check all the clamps for tightness and the connections for leakage.

(c) Check if the hoses and lines are not near sharp edges, moving parts and the exhaust system.

(d) Check if the lines are installed pass through the center of the grommets.

2. INSPECT FRONT BRAKE PADS AND DISCS (See page 32−35)

3. INSPECT REAR BRAKE PADS AND DISCS (See page 32−44)

4. INSPECT REAR BRAKE LININGS, DISCS AND DRUMS (See page 32−44, 32−50)

5. INSPECT OR CHANGE BRAKE FLUID (See page 32−4)

Fluid: SAE J1703 or FMVSS No.116 DOT3

CHASSIS

9901A−15

ON−VEHICLE INSPECTION

1. INSPECT STEERING LINKAGE

(a) Check the steering wheel free play. (see page 50−3)

(b) Check the steering linkage for looseness or damage.

(1) Check if the tie rod ends do not have excessive play.

(2) Check if the dust seals and boots are not damaged.

(3) Check if the boot clamps are not loose.

2. INSPECT STEERING GEAR HOUSING OIL

(a) Check the steering gear housing for oil leakage.

If oil is leaking, find the cause and repair it.

3. INSPECT BALL JOINTS AND DUST COVERS

(a) Inspect the ball joints for excessive looseness.

(1) Jack up the front of the vehicle and place wooden blocks with a height of 180 to 200 mm (7.09 to 7.87 in.) under the front tires.

(2) Lower the vehicle until the front coil spring has about half its ordinary load. Place stands under the vehicle for safety.

(3) Check that the front wheels are pointing straight ahead. Use chocks.

(4) Using a lever, pry up the end of the lower arm. Check the amount of play.

Maximum ball joint vertical play: 0 mm (0 in.)

If there is any play, replace the ball joint.

(b) Check the dust cover for damage.

4. INSPECT DRIVE SHAFT BOOTS

(a) Check the drive shaft boots for loose clamps, grease leakage, kink or damage.

5. CHECK TRANSAXLE OIL (FLUID)

(a) Visually check the transaxle for oil (fluid) leakage.

If oil is leaking, find the cause and repair it.

6. ROTATE TIRES (See page 28−1)

BODY

9901B−12

ON−VEHICLE INSPECTION

1. Canada:

TIGHTEN BOLTS AND NUTS ON CHASSIS AND BODY

(a) Tighten the bolts and nuts on the chassis parts listed below, if necessary.
- Front axle and suspension
- Drive train
- Rear axle and suspension
- Brake system
- Engine mounting
- Other chassis parts

(b) Tighten the bolts and nuts on the body parts listed below, if necessary.
- Seat belt system
- Seats
- Doors and hood
- Body mountings
- Fuel tank
- Exhaust pipe system
- Other body parts

2. REPLACE AIR CONDITIONING FILTER

(a) Remove the glove compartment assembly.
(b) Remove the filter case from the filter outlet.
(c) Remove the filter from the filter case.
(d) Replace the filter with a new one.
(e) The installation procedures are the removal procedures in reverse order.